Dioxin Treatment Technologies

November 1991

OTA-BP-O-93
NTIS order #PB92-152511



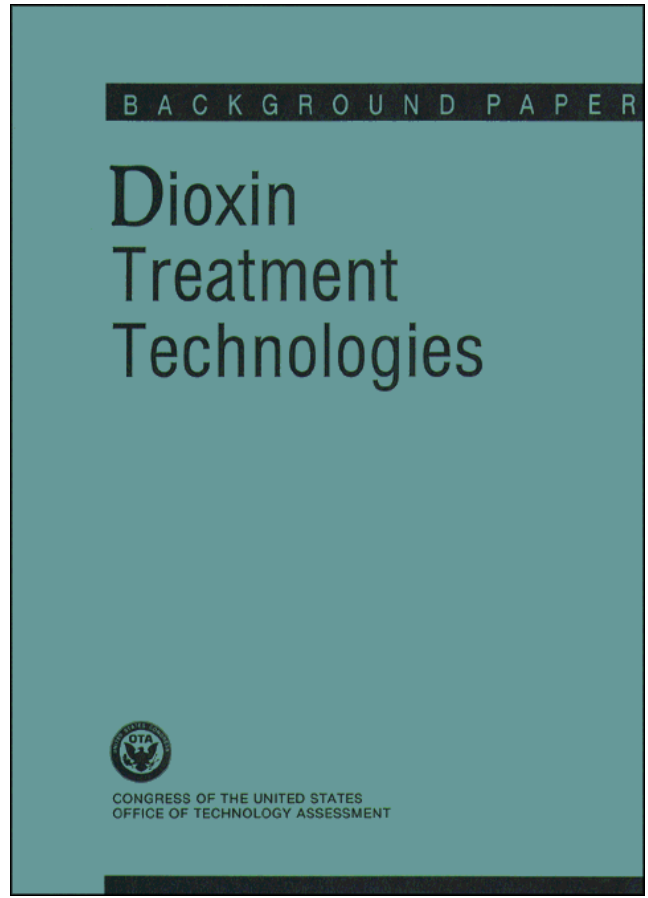

Recommended Citation:

U.S. Congress, Office of Technology Assessment, ***Dioxin Treatment Technologies+ Background Paper, OTA-BP-O-93*** (Washington, DC: U.S. Government printing Office, November 1991).

For sale by the U.S. Government Printing Office
Superintendent of Documents, Mail Stop: SSOP, Washington, DC 20402-9328
ISBN 0-16 -036007-2

Foreword

Nearly 100 hazardous waste sites around the United States have serious problems with dioxin contamination. Very little actual cleanup has been done at these sites. Plans to incinerate dioxin-contaminated materials at some sites have caused concern in the local communities that has led to public debate about the effectiveness of incineration and the availability of other remediation alternatives.

Because of these public concerns, Congressman Richard A. Gephardt asked OTA for some technical assistance on dioxin remediation technologies. OTA's previous assessments of hazardous waste treatment technologies, done for various committees, provided an appropriate base of expertise from which to undertake this more focused follow-on work. This resulting background paper evaluates alternative destruction technologies suitable for dioxin-contaminated soils and debris, and assesses the potential benefits and risks of their use on a large-scale dioxin cleanup.

This paper presents the status of national efforts to cleanup dioxin-contaminated sites and the technologies that have been used, proposed, and researched. It covers thermal and nonthermal treatment techniques as well as approaches such as stabilization and storage. It discusses the development of these technologies as well as advantages and disadvantages of their use.

Because dioxin destruction is both difficult and costly, to date only a few technologies have advanced beyond the research stage, and only incineration has been fully tested and approved for use at specific sites by the regulators. OTA concluded that, while these other technologies have promise, they will require more development effort and funding to prove suitable for specific applications.

OTA appreciates the assistance and support this effort received from workshop participants, reviewers, and other contributors. They provided OTA with valuable information critical to the completion of this study and enabled OTA to incorporate much more complete and accurate analyses. OTA, however, remains solely responsible for the contents of this report.



JOHN H.-GIBBONS
Director

Workshop Participants

Charlotte Baker
Environmental, Health, and Safety Office
University of California, Irvine

Stephen A. Boyd
Department of Crop and Soil Sciences
Michigan State University

Robert E. Ginsburg
Environmental Health Consultant

Linda E. James
Dioxin Management Unit
Missouri Department of Natural Resources

Ralph A. Koenig
Merlin Co.

Stephen Lester
Citizens Clearinghouse on Hazardous Waste

Peter Montague
Environmental Research Fund

Dennis J. Paustenbach
McLaren Hart Co.

Patrick A. Phillips
Vesta Technologies, Ltd.

Paul W. Rodgers
Limno-Tech, Inc.

Charles J. Rogers
Risk Reduction Engineering Laboratory
U.S. Environmental Protection Agency

Paul E. des Rosiers
Dioxin Disposal Advisory Group
U.S. Environmental Protection Agency

Other Reviewers

Jimmy W. Boyd
J.M. Huber Corp.

Kevin R. Bruce
Acurex Corp.

A.M. Chakrabarty
University of Illinois College of Medicine

Ritu Chaudhari
Metcalf & Eddie

Robert Feild
U.S. Environmental Protection Agency

Ray Forester
McLaren Hart Co.

Robert D. Fox
International Technology Corp.

Florence Kinoshita
Hercules, Inc.

Donald A. Oberacker
Risk Reduction Engineering Laboratory
U.S. Environmental Protection Agency

Abu Talib
MITRE Corp.

Evelyn Tapani
Massachusetts Department of Environmental Protection

Armon F. Yanders
Environmental Trace Substances Research Center
University of Missouri

NOTE: OTA appreciates and is grateful for the valuable assistance and thoughtful critiques provided by the workshop participants. The workshop participants do not, however, necessarily approve, disapprove, or endorse this report. OTA assumes full responsibility for the report and the accuracy of its contents.

OTA Project Staff: Dioxin Treatment Technologies

John Andelin, Assistant Director, OTA
Science, Information, and Natural Resources Division

Robert W. Niblock, ***Oceans and Environment Program Manager***

Peter A. Johnson, ***Project Director***

German Reyes, Principal Analyst

OTA Contributors

Emilia L. Govan

Joan Ham

Tara O'Toole

James Curlin

Michael Gough

Administrative Staff

Kathleen Beil, Office ***Administrator***

Sally Van Aller, ***Administrative Secretary***

Contractor

Florence Poillon, ***Editor***

Contents

Page

Chapter 1. Introduction and Summary ..o. ..*. ..o*. ... o.. .*ooo. **co .so. *.. ... Q*....**** 1
INTRODUCTION 1
Federal Efforts To Address the Dioxin Problem. 3
How Regulations Affect Technology Development 5
Summary of Findings 7

Chapter 2. Thermal Treatment Technologies ... .** ... e *********m******.********** 11
ROTARY KILN INCINERATION 11
Stationary or Land-Based Rotary Kiln Incinerators 12
Mobile Rotary Kiln Incinerators 13
LIQUID INJECTION INCINERATION TECHNOLOGY 17
Cost Estimates for Liquid Injection Incineration 19
FLUIDIZED-BED INCINERATION 19
Waste-Tech Services System 19
Ogden's Circulating-Bed Combustor (CBC) 21
Cost Estimates for Fluidized-Bed Incineration 23
HIGH-TEMPERATURE FLUID WALL DESTRUCTION-ADVANCED ELECTRIC REACTOR (AER) 23
Cost Estimates for AER Incineration 25
INFRARED INCINERATION 25
Testing and Availability of Infrared Incineration Technology 25
Cost Estimates for Infrared Incineration Technology 26
PLASMA ARC PYROLYSIS INCINERATION 26
Testing and Availability of PAP Incineration Technology 27
SUPERCRITICAL WATER OXIDATION 27
Testing and Availability of SCWO Technology **30**
Cost Estimates for SCWO Treatment 31
IN SITU VITRIFICATION 31
Testing and Availability of ISV Technology 32
Cost Estimates for ISV Technology 33

Chapter 3. Nonthermal Treatment Technologies ... ... *.. ..** **** e *0********** 35
DECHLORINATION TECHNOLOGIES 35
Early Dechlorination Methods 35
Recent Dechlorination Methods 36
BIOREMEDIATION 47
Testing and Availability of Bioremediation Technology 48
Cost Estimates for Bioremediation 49

Chapter 4. Other Remediation Technologies .*.** **m. .. *****e******.****************** **51**
ONSITE SOIL WASHING TECHNOLOGIES 51
Testing and Availability of Soil Washing Technology 51
Westinghouse Electric Soil Washing Technology 51
BioTrol Soil **Washing** Technology 52
SOLIDIFICATION AND STABILIZATION TECHNOLOGIES 52
Testing and Availability of S/S Technology 54
EPA QUICKLIME TREAMENT 55
INTERNATIONAL WASTE TECHNOLOGIES TREAMENT 55
UNDERGROUND MINE STORAGE 57
ABOVEGROUND, ELEVATED STORAGE BUILDINGS 57

Chapter 5. Technology and Cost Summary ... ***. .*** **9 **********e********.***** 59
THERMAL TREATMENT TECHNOLOGIES ... ... *.** .*. *.. ... .*** *OF...*.....***. 59
NONTHERMAL TREATMENT TECHNOLOGIES .....*..*.**..**.*....*...** 61
COST ESTIMATES OF DIOXIN TREATMENT 62

Appendix A. Summary of the Cleanup at Times Beach .**** *0** **** ***. ... *.. ******00* 67

Figures

Figure *Page*
2-1. Rotary Kiln 12
2-2. Rollins Environmental Services Rotary Kiln Incineration System 14
2-3. Vertically Oriented Liquid Injection Incinerator 18
2-4. Schematic Diagram of the Waste-Tech Incineration Process 20
2-5. Circulating-Bed Combustion System Offered by Ogden Environmental Services, San Diego, CA ***22***
2-6. Major Components of the AER Treatment Process 24
2-7. Infrared Incineration Process Offered by Westinghouse Environmental Services, Pittsburgh, PA 26
2-8. Westinghouse Environmental Services' Pyroplasma Waste Destruction Unit 28
2-9. Supercritical Water Oxidation Treatment 29
2-10. Bench-Scale ISV Unit Tested With Dioxin-Contaminated Soil From the Jacksonville, AR Superfund Site in February 1987 33
3-1. Galson Remediation Corp.'s APEG-PLUS chemical Treatment System 38
3-2. Reactor Used for Thermochemical Treatment in Eco Logic Process 43
3-3. Schematic Flow Diagram of the Thermal Gas-Phase Reductive Dechlorination Process 44
3-4. Low-Temperature Thermal Resorption Process 46
4-1. Westinghouse Soil Washing Process 51
4-2. Soil Washing System Offered by BioTrol, Inc. 53
4-3. Example of Proposed Design for Above-ground Storage Facility 58

Tables

Table *Page*
1-1. Dioxin-Contaminated Sites on the National Priorities List as of Mar. 14, 1991 3
1-2. Major Regulatory Initiatives To Address Dioxin 4
1-3. Sites With Highest Dioxin Contamination Levels in Soil Identified in EPA's 1987 National Dioxin Strategy 6
1-4. Dioxin Treatment Standard Expressed as Concentration in Waste Extract Under the Resource Conservation and Recovery Act (RCRA) 7
1-5. Development Status of Dioxin Treatment Technologies Reviewed in This Background Paper 8
2-1. Estimated Average Cost Per Pound To Incinerate PCB Waste 15

Chapter 1
Introduction and Summary

INTRODUCTION

About 100 waste sites across the United States contain serious dioxin contamination; 18 of these, in 10 States, are Superfund sites.[1] Treating dioxin contamination at these sites is both costly and difficult. Current cleanup standards require that treatment reduce dioxin residuals to very low levels.[2] The allowable level of residuals is so strict because of past studies and the Environmental Protection Agency's (EPA) assessment that dioxin poses a serious cancer hazard. Recently, EPA has decided to reevaluate dioxin's toxicity and its regulatory requirements,[3] however, currently approved cleanup projects and most of those planned must meet the current standard.

The term dioxin encompasses all aromatic organic chemicals known as dibenzo-p-dioxins. The dibenzo-p-dioxins of greatest concern to public and environmental health belong to a group of chemicals called halogenated dioxins. Because they are most common, the 75 chlorinated dioxins that contain one or more chlorine atoms in their molecular structure are the form given most attention.[4] Dioxins are extremely insoluble in water and slightly soluble in organic solvents. They have a strong affinity for absorption on organic matter and are very biologically and environmentally stable.[5] Therefore, as environmental contaminants, they persist for long periods of time.

Dioxins are undesirable byproducts formed during the manufacture of some useful chemicals such as chlorophenols, chlorobenzenes, and chlorophenoxyl pesticides. Almost all dioxin-containing products are no longer manufactured.[6] For example, Dow Chemical and Vertac ceased production of phenoxy herbicides in 1979 and 1983, respectively. However, past use has resulted in contamination of a variety of sites. Dioxin contamination is now found primarily in soil and in processing waste containers stored at inactive production sites. Of the 500,000 metric tons of dioxin-contaminated materials reported by EPA in 1986,[8] more than 98 percent consisted of dioxin-contaminated soil; most of the remaining consisted of stored, processed material.

While ***not*** a subject covered in this background paper, there also is public concern about other current sources of dioxin that may result in releases to the environment. For example, dioxin may be formed and subsequently released into the atmosphere during the incineration of trash, garbage, and discards (municipal solid waste) containing chlorinated materials.[9] Plans for studying and controlling

---

[1] U.S. Environmental Protection Agency, Office of Solid Waste and Emergency Response, ***National Dioxin*** study-Report to Congress, EPA/530/SW-87/025 (Washington, DC: August 1987), p. II-3; "Current National Priorities List" (dioxin sites only); information provided by G. Willey, U.S. EPA, Hazardous Waste Evaluation Division, Site Assessment Branch, June 17, 1991.

[2] The current action level is 1 part per billion ppb) (of 2,3,7,8-tetrachlorodibenzo-p-dixoin (TCCD) equivalents) when the site is in a residential area. When the site is in a nonresidential, nonindustrial area the action level is 20 ppb. The 1 ppb level was established as a response to a Centers for Disease Control risk assessment that established this as a "level of concern." See: R.D. Kimbrough H. Falk, P. Stehr, and G. Fries, "Health Implications of 2,3,7,8-tetrachlorodibenzo-p-dioxin (TCDD) of Residual Soil," ***J. Toxicol. Environ. Health, vol. 14, 1984,*** pp. ***49-93.***

[3] ***EPA is currently reviewing the potnency*** of dioxin. A reevaluation report Written by the Office of Research and Development With the help of outside scientists will be completed next year. See: David J. Hanson "Dioxin Toxicity: New Studies Prompt Debate, Regulatory Action," ***Chemical & Engineering News,*** Aug. 12, 1991, pp. 7-14.

[4] The most toxic of the chlorinated dioxins is 2,3,7,8-TCDD. In addition to 2,3,7,8 -TCDD, other products of concern include chlorinated dibenzofurans (CDFs), chlorophenols, chlorobenzenes, and chlorophenoxy compounds.

[5] U.S. Environmental Protection Agency, Hazardous Waste Engineering Research Laboratory, *Treatment Technologies for Dioxin-Containing Wastes, EPA/600/2-86/096 (Cincinnati,* OH: October 1986), pp. 1.3-1.4, 3.4-3.7; D. Oakland, "Dioxins: Sources, Combustion Theories & Effects," London Scientific Services, 54th Annual NSCA Conf. Proc., Brighton, U.K., 1987.

[6] The one exception in the United States is pentachlorophenol (PCP). EPA estimates that current PCP production at Vulcan Chemicals in Wichita, KS, may be responsible for the generation of up to 5,000 pounds of dioxins and other related chemicals annually; however, these chemicals are generally contained within the treated wood produced at the plant.

72,4,5 -trichlorophenol.

[8] U.S. Environmental Protection Agency, op. cit., footnote 5.

[9] For a complete discussion on the potential routes or pathways by which humans may be exposed to dioxin emissions from incinerators, see: G.F. Fries and D.J. Paustenbach, "Evaluation of Potential Transmission of 2,3,7,8-tetrachlorodibenzo-*p*-dioxin-contaminated Incinerator Emission to Humans Via Foods," ***J. Toxicol. Environ. Health,*** vol. ***29,*** 1990, pp. 1-43.

dioxin emissions from municipal waste incinerators were recently published by EPA.[10] Another dioxin source is the manufacturing and chlorine bleaching of pulp and paper products. Some dioxin containing effluents are discharged from pulp and paper plants into surface waters. Dioxin contamination is also found at abandoned paper production plants and at paper waste disposal sites.[11]

In the past, a variety of incidents have led to dioxin contamination of the environment. A few examples of such incidents include: the accidental discharge of dioxin from a trichlorophenol/hexachlorophene production plant in Seveso, Italy; dioxin contamination of large quantities of soil at a Gulfport, Mississippi, Naval Ship Yard Repair Base from the leakage of stored drums of Agent Orange; and the use of dioxin-containing still-bottom waste oils[12] as a road dust suppressant in towns such as Times Beach, Missouri. Contamination of soil has also occurred in areas where dioxin-contaminated herbicides were used for vegetation control or where material from these contaminated areas was used for construction purposes.[13]

Human health effects from exposure to dioxin have been studied by scientists for about two decades. Animal studies showed dioxin to be the most potent carcinogen ever tested. However, studies of humans exposed to low doses of dioxin have not demonstrated excess cancers among these groups.[14] A recent epidemiologic study of chemical workers at 12 plants in the United States exposed to dioxin, however, does provide evidence of carcinogenic effects following chronic exposure to relatively high doses.[15] Scientists are now debating a relatively new theory about the action of dioxin on a molecular level, and some believe that the outcome of this debate could change the way EPA estimates the levels of dioxin exposure that are dangerous to human health. At present, Environmental Protection Agency standards for dioxin exposure are generally considered conservative and are much lower than those recommended by the World Health Organization and most other countries' regulatory agencies.[16] Whether or when exposure limits in the United States will change, however, is not known and has not been analyzed by OTA for the purposes of this background paper.

Nevertheless, exposure of humans to dioxin continues to be of great public concern. For many reasons, sites with dioxin-contaminated soil have been studied for a long time, but no actual cleanup work has begun. Because communities surrounding these sites have been told of the dangers of dioxin and have been convinced that something needs to be done, they have been disappointed that so few remedial actions have occurred. Further, since they have read that no technology can totally destroy dioxin or that some technologies can pose other health hazards, the public is understandably skeptical of technological solutions now being proposed.

Because of the public's concern, OTA was asked to prepare an analysis of alternative technologies for

[10] U.S. Environmental Protection Agency, Office of Research and Development Office of Environmental Engineering and Technology Demonstration, *Municipal Solid Waste Research Agenda (Washington* DC: April 1991), p. 32.

[11] For a comprehensive analysis of the environmental effect associated with the pulp and paper making industry and technologies available for reducing dioxin releases, see: Office of Technology Assessment, *Technologies for Reducing Dioxin in the Manufacture of Bleached Wood Pulp-Background Paper, OTA-BP-O-54 (Washington DC:* U.S. Government Printing Mice, May 1989).

[12] In some cases, still-bottom residues were mixed with waste oil from a variety of sources, probably largely used crankcase oil; and in at least one other case, it is suspected, undiluted still-bottoms themselves were applied directly to roads and horse arenas.

[13] M.A. Karin and P.W. Rodgers (~.), *Dioxins in the Environment* (New York, NY: Hemisphere Publishing Inc., 1985); S. Cerlesi, A. Di Domenico and S. Ratti, "2,3,7,8-tetrachlorodibenzo-*p*-dioxin (TCDD) Persistence in the Seveso (Milan, Italy) Soil," *Ecotox. Environ. Safety,* vol. 18, 1989, pp. 149-164; A. Di Domenico, G. Viviono, and G. Zapponi, "Environmental Persistence of 2,3,7,8-TCDD at Seveso," in O. Hutzinger, RW. Frei, E. Merion, and F, Pocchiari (eds.), *Chlorinated Dioxins and Related Compounds: Impact on the Environment (New* York, *NY:* Pergamon Press, 1982), pp. 105-144; D.A. Oberacker, J.J. Cudahy, and M.K. Richards, "Remediation (Clean Up) of Contaminated Uncontrolled Superfund Dumpsites by Incineration and Other Popular Technologies," 1991 (paper submitted for publication).

[14] Michael Gough, "Human Health Effects: What the Data Indicate," *The Science of the Total Environment, vol.* 104, undated, pp. 129-158, 1991; G.F. Fries and D.J. Paustenbach, "Evaluation of Potential Transmission of 2,3,7,8-tetrachlorodibenzo-*p*-dioxin-Contaminated Incinerator Emissions to Humans Via Foods," *J. Toxicol. Environ. Health,* vol. 29, 1990, pp. 1-43; D.J. Paustenbach et al., "Recent Developments on the Hazards Posed by 2,3,7,8-tetrachlorodibenzo-*p*-dioxin in Soil: Implications for Setting Risk-Based Cleaning Levels at Residential and Industrial Sites," this paper was submitted for publication to the *J. Toxicol. Environ. Health,* June 1991.

[15] M.A. Fingerhut, W.A. Haperin, D.A. Marlow, et al., "Cancer Mortality in Workers Exposed to 2,3,7,8-tetrachlorodibenzo-*p*-dioxin," 'New England *Journal of Medicine,* vol. 324, No. 4, Jan. 24, 1991, pp. 212-218.

[16] The World Health Organization is the coordinating agency of the United Nations responsible for international health work. Some Of the activities carried out by WHO include: providing advice and practical assistance to national governments to strengthen their national health services; providing means to control or eradicate major disease; and improving sanitation.

Table l-l—Dioxin-Contaminated Sites on the National Priorities List as of Mar. 14, 1991 (effective date of Revised Hazard Ranking System)

Site name[a]	Location	Observed release: Ground-water	Surface water	Air
Standard Steel & Metal Salvage Yard	Anchorage, AK	No	No	No
Arkwood, Inc.	Omaha, AR	No	No	No
Jacksonville Municipal Landfill	Jacksonville, AR	No	No	No
Rogers Road Municipal Landfill	Jaoksonville, AR	No	No	No
Vertac, inc.	Jacksonville, AR	No	Yes	Yes
Wedzeb Enterprises, inc.	Lebanon, IN	No	No	No
Parsons Chemical Works, inc.	Grand Ledge, MI	No	Yes	No
Minker/Stout/Romaine Creek	Imperial, MO	No	Yes	Yes
Shenandoah Stables	Moscow Mills, MO	No	No	Yes
Syntex Agribusiness, Inc.	Verona, MO	Yes	Yes	No
Times Beach site	Times Beach, MO	No	No	No
Brook industrial Park	Bound Brook, NJ	Yes	No	No
Diamond Aikali Co	Newark, NJ	No	No	Yes
Hooker (Hyde Park)	Niagara Falls, NY	No	Yes	Yes
Love Canal	Niagara Falls, NY	No	Yes	No
Mallory Capacitor Co.	Waynesboro, TN	No	No	No
Saunders Supply Co.	Chuckatuck, VA	No	No	No
Centralia Municipal Landfill	Centralia, WA	No	No	No

[a]Several other Superfund sites known to contain dioxin contamination (e.g., Baird & McGuire in Holbrook, Massachusetts) were excluded because dioxin was not the only reason for their inclusion by EPA on the National Priorities List.

SOURCE: "Current National Priorities List" (dioxin sites only), and supplementary information communicated by G. Willey, U.S. Environmental Protection Agency, Hazardous Site Evaluation Division, Site Assessment Branch, June 17 and Sept. 12, 1991.

treating soil and other materials contaminated by dioxin. This analysis is thus focused on the efficacy, availability, and merits of various technologies that could be used to treat dioxin contamination. This report evaluates the various technologies that are proven and readily available to be applied as well as those still in the research stage. It compares the advantages and limitations of these technologies, and explores the factors that will determine whether they may actually be applied to a dioxin cleanup operation.

This OTA background paper, however, is not meant to represent a complete summary of all potentially applicable technologies that have been developed to date but is a review of those treatment processes with most promise to treat dioxin-contaminated soils.

Table 1-1 lists the contaminated sites known to contain dioxin that EPA has placed on the National Priorities List (NPL) for cleanup (also known as Superfund sites). These sites represent the major dioxin cleanup challenges that the technologies covered in this paper would address.

Federal Efforts To Address the Dioxin Problem

The potential hazard posed by dioxin has been addressed by Federal and State agencies in a number of ways for about 25 years. It has been identified as a toxic substance, advanced notification and treatment requirements for dioxin disposal have been written, a national dioxin strategy has been established, and incineration has been selected as the preferred technology for dioxin destruction. Table 1-2 contains a chronological description of major regulatory activities carried out in the United States since 1966 to address the dioxin problem.

In November 1983, EPA issued its national strategy to investigate, identify, and remediate

Table 1-2—Major Regulatory Initiatives To Address Dioxin

1966: U.S. Department of Agriculture (USDA) and the Food and Drug Administration (FDA) establish residue tolerance for the herbicide 2,4,5-T in food products.

1974: Centers for Disease Control (CDC) identifies dioxin as the toxic substance in Missouri waste oil.

1976: Resource Conservation and Recovery Act (RCRA), the first Federal law governing waste cleanup or proper disposal is passed.

1979: The Environmental Protection Agency (EPA) issues an emergency suspension order banning use of the phenoxy herbicide 2,4,5-T.

1980: EPA requires advanced notification of disposal of dioxin-contaminated waste. Drums of waste contaminated with dioxin are found on the Denney Farm in Missouri. The first clear evidence that the half-life of dioxin in Missouri soil was much longer than 1 year, based on the laboratory findings obtained at the University of Missouri's Environmental Trace Substances Research Center.[a]

1982: EPA discovers dioxin levels up to 1,200 parts per billion (ppb) in Times Beach, MO, and contamination in 14 other Missouri sites. Meremec River overflows in December, and officials worry about contamination spreading to other sites (it did not).

1983: EPA and Missouri Department of Natural Resources offer to buy Times Beach because of the unavailability of demonstrated treatment technologies and the uncertainty about when cleanup would be completed.

EPA issues a proposed rule allowing disposal of dioxin-contaminated waste only in approved landfills and a "national dioxin strategy" for investigating, identifying, and cleaning up sites contaminated with dioxin (99 sites across the United States were identified with potentially serious dioxin contamination).

1985: RCRA dioxin-listing rule now defines waste streams designated as acutely hazardous. Moreover, this rule replaces the regulation concerning the disposal of waste contaminated with 2,3,7,8-TCDD under the Toxic Substance Control Act (TSCA).

1986: Because dioxin wastes are banned from land disposal under the Hazardous and Solid Waste Amendments (HSWA) of 1984, EPA issues interim rule that these wastes must be treated to a detectable level of 1 ppb in the waste extract for TCDD and five other compounds.They must also be treated to a nondetectable level for 2,4,5-T and three other compounds.

EPA efforts to prevent potential dioxin exposure include regulation of dioxin-containing discharges under the Clean Water Act.

1987: The Risk Assessment Forum of the Environmental Protection Agency develops and publishes 2,3,7,8-tetrachlorodibenzo-p-dioxin (TCDD) Toxicity Equivalent Factors (TEFs).

1988: EPA issues its Record of Decision to employ incineration as a remedial technology at Times Beach, based on results from a research incineration project at Denney Farm, MO. EPA Dioxin Disposal Advisory Group (DDAG) recommends a general approach for the disposition of pentachlorophenol (PCP) and PCBs waste and contaminated soil. The recommended levels of this approach were 1 ppb TCDD equivalents for residential areas and 20 ppb TCDD equivalents for industrial or nonresidential sites.

1990: State of Connecticut issues dioxin ambient air quality standard of 1 picogram per cubic meter (1 picogram = one-trillionth of a gram) to protect the public from combined effects of dioxin from all media, sources, and exposure routes.

1991 : EPA orders reevaluation of the risk assessment model for dioxin in light of the increasing scientific data available. This effort will focus primarily on reassessing health effects due to dioxin, gathering new laboratory data, and investigating ecological effects.

[a]Half-lives for dioxin ranging from 25 to 100 years (subsurface soils) and from 9 to 35 years (surface soils) have been suggested since then Recent efforts to control dioxin emissions, such as Connecticut's dioxin ambient air quality standard, have assumed half-live values for dioxin of nearly 6 years (2,120 days). For more details see: Dennis J. Paustenbach, "Recent Developments on the Hazards Posed by 2,3,7,8-tetrachlorodibenzo-*p*-dioxin in Soil: Implications for Setting Risk-Based Cleanup Levels at Residential and Industrial Sites," paper submitted for publication to *J. Toxicol. & Environ. Health,* June 1991; H.V. Rao and D.R. Brown, "Connecticut's Dioxin Ambient Air Quality Standard," *Risk Analysis,* vol. 1, No. 2, 1990, pp. 597-603.

SOURCES: J.R. Long and D.J. Hanson, "Dioxin Issue Focuses on Three Major Controversies in U.S.," *Chemical & Engineering News, vol. 61,* June 6,1983, p. 25; P.E. des Rosiers, "National Dioxin Study," J.H. Exner (cd.), *Solving Hazardous Waste Problems: Learning From Dioxins, ch. 3,* pp. 34-53, ACS Symposium Series 338, Washington, DC, 1987; R.D. Kimbrough et al., "Health Implications of 2,3,7,8-tetrachlorodibenzo-*p*-dioxin (TCDD) Contamination of Residential Soil, *J. Toxicol. & Environ. Health,* vol. 14, 1984, p. 47; H.V. Rao and D.R. Brown, "Connecticut's Dioxin Ambient Air Quality Standard," *Risk Analysis,* vol. 1, No. 2, 1990, pp. 597-603; U.S. Environmental Protection Agency, Office of Solid Waste and Emergency Response, *National Dioxin Study-Report to Congress,* EPA/530/SW-87/025 (Washington, DC: August 1987), pp. V1-V5; J.S. Benin and D.G. Barnes, Risk Assessment Forum, "Interim Procedures for Estimating Risks Associated With Exposures to Mixtures of Chlorinated Dibenzo-*p*-dioxins and Dibenzofurans (CDDs and CDFs)," EPA/625/3-87/O12, March 1987; A.F. Yonders, C.E. Orazio, R.K. Puri, and S. Kapila, "On Translocation of 2,3,7,8-tetrachlorodibenzo-*p*-dioxin: Time-Dependent Analysis at the Times Beach Experimental Site," *Chemosphere, vol. 19, 1989,* p. 41a.

dioxin-contamin ated areas.[17] Accompanying the congressionally mandated strategy was a plan to conduct research to determine existing contamination levels and available treatment and disposal methods. Evaluation of environmental and human health risks posed by dioxin contamination of various media was also part of the study.

As part of its strategy, EPA identified suspected areas of dioxin contamination by the source of dioxins. By the end of its study, EPA had identified 99 sites across the United States with potentially serious dioxin contamination. As expected, the majority were sites where chlorinated organics had been produced or used in the formulation of pesti-

[17]U.S. Environmental Protection Agency, Office of Water and Office of Solid Waste and Emergency Response in Conjunction With Dioxin Management Task Force, *Dioxin Strategy* (Washington, DC: Nov. 28, 1983).

cides and herbicides, or disposed of on land.[18] As indicated in table 1-3, 9 of the 14 sites with the highest measured levels of dioxin contamination were located in Missouri.

In addition to its high dioxin contamination, the Denney Farm, Missouri, site attracted national attention because it was there that EPA tested and perfected the mobile rotary kiln incineration technology now recommended for dioxin cleanup. The field testing of mobile incineration at Denney Farm started in February 1986 and concluded in June 1989.[19] Since then, this system has been upgraded by commercial firms and employed with success at several small contaminated sites. So far, incineration is the only remediation technology that has been shown effective at destroying dioxin in soil.

Mobile incineration has yet to be applied at larger dioxin-contaminated sites such as those on the NPL and listed in table 1-1. At three of these Superfund sites, EPA has selected incineration as the remedial technology. These are: the Arkwood site and Vertac Chemical Corp. site in Arkansas and the Times Beach, Missouri site. At the Vertac site, current plans are to incinerate 28,500 drums containing dioxin-contaminated phenoxy herbicides from still bottoms.[20] Prior to implementing this plan, however, the contractors will have to submit adequate trial-burn data to demonstrate that mobile incineration will meet the required performance criteria and the local air pollution standards. These trials began during 1991 and are continuing. If they are successful and prove to meet the standards, operations may proceed soon after. Continuous public opposition and some recent operating equipment problems at Vertac have contributed to delays in the project.[21] Developments at the Vertac site are being monitored closely by some environmental groups, and the level of success achieved there could substantially influence public acceptability of future incineration projects.

EPA's Record of Decision of September 29,1988 for the Times Beach Superfund site calls for the incineration of more than 92,000 cubic yards of dioxin-contaminated soil. Companies with incineration technology capability are currently being invited to submit contract proposals for treating this soil. (App. A summarizes the activities proposed for remediation at Times Beach.) The plans and progress at this site are also being carefully watched by the environmental community.

How Regulations Affect Technology Development[22]

The Superfund law or CERCLA (Comprehensive Environmental Response, Compensation, and Liability Act) requires that the application of remedial technologies at Superfund sites protect human health and the environment according to established Federal, State, and local regulations. In implementing this mandate, EPA has developed a process to identify the extent of contamination at sites considered national priorities for cleanup, to select and evaluate cleanup technologies, and to apply the appropriate remedy. During an early step in the process known as the Feasibility Study, efforts are made to develop, screen, and evaluate existing proven and alternative remedial technologies that may be applied to the site. Thus far, technology selection for dioxin sites such as Vertac and Times Beach has been based on general categories (e.g., thermal treatment) rather than on specific treatment processes (e.g., rotary kiln, circulating-bed combus-

[18] Paul E. des Rosiers, "Evaluation of Technology for Wastes and Soils Contaminated With Dioxins, Furans, and Related Substances," *Journal of Hazardous Materials,* vol. 14, 1987, p. 120.

[19] U.S. Environmental Protection Agency, Office of Research and Development, Hazardous Waste Engineering Research Laboratory, Destruction *of Dioxin-Contaminated Soils and Liquids by Mobile Incineration,* EPA/600/S2-87/033 (Cincinnati, OH: June 1987); U.S. Environmental Protection Agency, Office of Research and Development Risk Reduction Engineering Laboratory, *EPA Mobile Incineration System Modifications, Testing and Operations, February 1986 to June 1989,* EPA/600/52-87/033.

[20] Actually, EPA selected incineration for the on-site cleanup under its removal authority and the State of Arkansas selected incineration for treatment of the drummed, still bottoms waste.

[21] "Snafus Plague Vertac Barrel Burn Tests," *Superfund,* July 12, 1991, p. 4.

[22] U.S. Environmental Protection Agency, Office of Research and Development, Risk Reduction Engineering Laboratory, *SITE Program Demonstration Test Soliditech, Inc., Solidification/Stabilization Process,* vol. 1, EPA/540/5-89/005a (Cincinnati, OH: February 1990); U.S. Environmental Protection Agency, Office of Research and Development Risk Reduction Engineering Laboratory, *SITE Superfund Innovative Technology Evaluation: Technology Profiles,* EPA/540/5-90/006 (Cincinnati, OH: November 1990); Arthur D. Little, Inc., *Evaluation of Available Cleanup Technologies for Uncontrolled Waste Sites-Final Report,* prepared for The Office of Technology Assessment, Nov. 15, 1984; U.S. Environmental Protection Agency, Office of Solid waste and Emergency Response, and Office of Radiation Programs, *Assessment of Technologies for the Remediation of Radioactively Contaminated Superfund Sites, EPA/540/2-90/001* (Washington DC: January 1990), p. 1.

Table 1-3-Sites With Highest Dioxin Contamination Levels in Soil Identified in EPA's 1987 National Dioxin Strategy

Site	Location	Concentration (ppb)
Diamond Alkali	Newark, NJ	51,000
Hooker Chemical	Niagara Falls, NY	18,600
Brady Metals	Newark, NJ	3,500
Denney Farm	Aurora, MO	2,000
Piazza Road	Rosati, MO	1,800
Shenandoah Stables	Moscow Mills,MO	1,750
Quail Run Mobile Home Park	Gray Summit, MO	1,650
Dow Chemical Co.	Midland, MI	1,500
Times Beach	Times Beach, MO	1,200
Vertac	Jacksonville, AR	1,200
Syntex Agribusiness	Verona, MO	979
Sullins Residence	Fenton, MO	820
Sontag Road	Ballwin, MO	588
Bliss Tank Property	Frontenac, MO	430

SOURCE: U.S. Environmental Protection Ageney, Office of Solid Waste and Emergency Response, *National Dioxin Study—Report to Congress,* EPA/530/SW-87/025 (Washington, DC: August 1987), pp. 11.22-11.33.

tion, infrared thermal combustion, dehalogenation, etc). A specific technology is selected after contract proposals submitted by remediation companies are evaluated and the technology is tested.

In addition to the procedures established under CERCLA for the testing and selection of technologies at Superfund sites, EPA has also established the Superfund Innovative Technology Evaluation or SITE program under its Offices of Research and Development (ORD) and Solid Waste and Emergency Response (OSWER). According to EPA, the SITE program was created to "accelerate the development, demonstration, and use of new or innovative technologies that offer permanent, long-term cleanup solutions at Superfund sites.' '[23] Since its inception, the goals of the SITE program have been to facilitate and encourage the development and commercialization of alternative technologies; conduct field demonstrations of promising technologies to gather and make available data regarding their performance and application cost; and develop procedures and policies that favor the selection of alternative technologies at contaminated sites.

Several potential technologies for dioxin treatment, such as dechlorination, nondestructive treatment or stabilization, and in situ vitrification,[x] have been field-tested by EPA under the SITE program with varying degree of success. Because this opportunity, which often arises during the early stages of development, is offered only once developers may face difficulties in implementing and ensuring that their technologies are at least as effective as incineration.[25] Hence, few of these innovative technologies are likely to be applied soon to dioxin-contaminated soil.

Unlike CERCLA, which addresses abandoned waste sites, the Resource Conservation and Recovery Act (RCRA) addresses the application of treatment technologies at active hazardous waste management facilities. Under RCRA authority, EPA has established specific treatment and disposal standards for dioxin waste (see table 1-4). EPA has also used its RCRA authority to address past contamination at active facilities and to establish corrective action procedures to identify and select treatment technologies. However, unlike the Superfund law, in which identifying, evaluating, and selecting a remedial technology is scheduled to take up to 18 months, RCRA allows a maximurn of only 9 months. Even though these schedules are not necessarily met in practice, the time requirement often results in limited test and evaluation of new technologies.

To summarize, under CERCLA and RCRA, it is required that selected technologies demonstrate the ability to significantly reduce the volume, toxicity, and mobility of dioxins in a cost-effective manner. In practice, the time allowed to develop alternative technologies is limited, and the range of applications tested is narrow.

The favoring of demonstrated technologies for dioxin treatment, although protective of human

[23]U.S. Environmental protection Agency, Office of Research and Development Risk Reduction Engineering Laboratory, *SITE Program Demonstration Test Soliditech, Inc., Solidification/Stabilization Process,* vol. 1, EPA/540/5-89/005a (Cincinnati, OH: February 1990); U.S. Environmental Protection Agency, Office of Research and Development, Risk Reduction Engineering Laboratory, *SZTE Superfund Innovative Technology Evaluation: Technology Profiles, EPA/540/5-90/006* (Cincinnati, OH: November 1990).

[24]Geosafe Corp., the firm responsible for making in situ vitrification available for commercial applications, has suspended all large-scale remediation workpendinganinvestigation (and probably System modifications) of a recent unexplained explosion or expulsion of the molten glass material due either to a steam pocket and/or an uncontrolled reaction from buried waste drums during a large-scale test. (Source: letter from James E. Hansen, Geosafe Corp., to Norm Neidergang, Associated Division Director, Hazardous Waste Management Division, Office of Superfund, U.S. EPA, Region V, June 21, 1991.)

[25]For more information on the technology implementation problems at the SITE program, and probable ways to solve them, see: U.S. Congress, Office of Technology Assessement, *Coming Clean: Superfund Problems Can Resolved. . .,* OTA-ITE-433 (Washington, DC: U.S. Government Printing Office, October 1989), pp. 50-51, 181-187.

Table 1-4-Dioxin Treatment Standard Expressed as Concentration in Waste Extract Under the Resource Conservation and Recovery Act (RCRA)

Dioxin present in waste	Concentration[a]
HxCDD-all hexaohlorodibenzo-pdioxins.....	<1 ppb
HxCDF-all hexachorodibenzofurans	<1 ppb
PeCDD-all pentachlorodibenzo-g+dioxins.....	<1 ppb
PeCDF—all pentachlorodibenzofurans	<1 ppb
TCDD-all tetrachlorodibenzo-p-d ioxins	<1 ppb
TCDF-all tetrachlorodibenzofurans	<1 ppb
2,4,5-Trichlorophenol	<50 ppb
2,4,6-Trichlorophenol	<50 ppb
2,3,4,6-Tetrachlorophenol	<100 ppb
Pentachlorophenol	<10 ppb

[a]ppb= parts per billion

SOURCE: "Dioxin Treatment Standard Expressed as Concentration in Waste Extract," 40 CFR 288.41 (1989).

health and the environment as required by law, also tends to preclude serious consideration of many promising emerging technologies that need further testing. This is particularly true for dioxin treatment because most promising technologies are at an early stage of development and they lack sufficient quantitative performance data. In addition, most emerging technologies require substantial development costs. The high liability costs associated with dioxin treatment are also considered an impediment to technology development. For these reasons, and because overall innovation is difficult in any case, it is unlikely that development of new technologies for dioxin treatment can be accelerated without increases in Federal support for demonstration efforts. The uncertainty surrounding current thinking about dioxin toxicity may also slow technology development efforts because industry may wait until a decision is made to change or not to change treatment standards.

Summary of Findings

A wide range of existing and proposed hazardous waste treatment technologies that may be considered for treating dioxin in soil are analyzed in this background paper (see table 1-5). At present, incineration is the only available technology that U.S. regulatory agencies deem acceptable for treatment of dioxin-contaminated materials. Other technologies are promising, but none has been sufficiently developed or shown in tests to be adequate for routine, current cleanup work. Although it may be possible for cleanup work to be delayed at some sites until alternative technologies are proven effective or until the dioxin toxicity question is answered, it is unlikely that private industry will invest in the necessary R&D or testing to make this happen soon; on the other hand, they might if the technology has broader applications.

Dioxins present a unique problem for those seeking to develop appropriate treatment technologies because they are difficult to remove from soil for treatment, and are present in a variety of contamination settings (i.e., different types of soils and environmental conditions). To meet cleanup standards for dioxin, it is also necessary to design special treatment systems capable of removing the dioxin from its matrix. The treatment systems must also meet stringent operating requirements. Many researchers have consequently focused more attention on contaminants such as polychlorinated biphenyls (PCBs), for which the problem is somewhat simpler, the quantities of materials to be treated are much larger and more uniform, and the standards are less stringent. Moreover, when a permit under the Toxic Substances Control Act (TSCA) is obtained for PCBs, it is issued as a national permit, whereas a RCRA permit for dioxin is only site-specific—which means that anew permit must be obtained for each site.

Thermal technologies for dioxin treatment offer the most straightforward approach because, given the appropriate temperature and other conditions needed, one can be assured that the dioxins will be broken down. Thermal technologies have therefore been given the most attention, and certain incineration designs have been built, tested, and successfully applied (on a small scale) to dioxin treatment.

Effective incineration requires control and monitoring of emissions and residues. The incinerator must also handle a wide variety and large quantity of material (e.g., soil and rubble) present at most dioxin-contaminated sites. Unique site conditions combined with the current regulatory process make it necessary to qualify each proposed technology for its specific application.[26] In addition, the public is skeptical about the actual performance of incinerators operating in their communities and concerned about whether design conditions will always be maintained. Safe operating conditions appear attainable with carefully designed and applied incineration technology.

[26]This takes the form of a "test bum" for each incinerator.

Table 1-5-Development Status of Dioxin Treatment Technologies Reviewed in This Background Paper

Chapter	Category	Technology	Status of development: For dioxin treatment	Status of development: For other waste treatment
Two	Thermal	Rotary kiln incineration	A	A
Two	Thermal	Liquid injection incineration	B[1]	A
Two	Thermal	Fluidized bed incineration	B	A
Two	Thermal	Advanced electric reactor	C	C
Two	Thermal	Infrared incineration	C[2]	C
Two	Thermal	Plasma arc pyrolysis	D	C
Two	Thermal	Supercritical water oxidation	D	C
Two	Thermal	In situ vitrification	D	C
Three	Nonthermal	Chemical dechlorination (KPEG, APEG-PLUS)	C	A
Three	Nonthermal	Base-catalyzed decomposition	D	D
Three	Nonthermal	Thermal-gas phase reduction dechlorination	E	C
Three	Nonthermal	Thermal resorption (UV destruction)	C	C
Three	Nonthermal	Bioremediation	D	C

Key to status of development
A. An operating system has been built, tested, permitted and used on a site cleanup.
B. A system has been built and tested but not permitted or used on a site cleanup.
C. A pilot plant has been built and tested with waste material.
D. Laboratory or bench-scale tests have been completed.
E. Technology is in the research or study phase.

NOTES:
[1]A sea-based system.
[2]More experience in Europe.

SOURCE: Office of Technology Assessment, 1991.

All of the above factors, as well as the low level of allowable residuals, contribute to the relatively high costs of treatment of dioxin contamination with incineration technology, and have sparked interest in alternative technologies such as chemical dechlorination and bioremediation.

Although some alternatives look promising and have been shown effective in laboratory settings (or in application to other pollutants), none have received enough development and testing to make them viable for large-scale treatment of dioxin centamination today.

Chemical dechlorination techniques (discussed in ch. 3) have certain advantages that make them good candidates for development. For example, chemical dechlorination may be used to treat dioxin-contaminated soil and sludge within enclosed reactor systems under mild temperature and pressure conditions. Such reactors could be relatively simple to build and operate with minimum production of off-gases. Chemical dechlorination techniques can also result in cost savings since reagents can be recycled. But, chemical dechlorination has not been sufficiently field tested with dioxins at this time.

Two other highly promising dechlorination technologies, now undergoing field testing, are base catalyzed decomposition and thermal gas-phase reductive dechlorination. Other technologies such as bioremediation are currently in the research stage, but if research and development proves successful, they could be useful for in situ treatment, which

would eliminate many problems associated with excavating, transporting, and handling of dioxin-contaminated soil. The key factor for bioremediation technologies continues to be getting the dioxin molecules off the soil and in contact with a microorganism. Demonstration of the effectiveness of most bioremediation approaches is still some years away but laboratory tests continue to be promising.

Finally, some combinations of technologies (e.g., use of both thermal and dechlorination techniques) could also prove very effective at certain locations because the best features of each may be enhanced through careful design. Much more engineering and testing would be necessary, however, before a specific application could go forward.

Some researchers have attempted to develop innovative, in situ treatment technologies for dioxin but have encountered difficulties in measuring the extent of dioxin destruction for these processes. These researchers claim that there is limited long-term support for alternative technology research and development.

It does not appear that private industry has sufficient incentive to invest in developing alternative technologies for dioxin. Spinoffs from developments in the treatment of other contaminants (e.g., PCBs) could prove useful but, even here, investment would be required for tests with dioxins. A more aggressive government program to develop and prove alternative dioxin treatment technologies would assist in evaluating their real potential. At present, however, the development of these alternatives is moving very slowly, and any new solutions to treating dioxin contamination appear to be along way off.

Some large corporations have promoted incineration for dioxin treatment through substantial financial investments. Some other companies have designed alternative technologies that they claim could treat and destroy dioxins. In general, firms have had difficulty financing the needed development, testing, and marketing for alternative systems, as well as the legal costs and the cost of attempting to obtain an EPA operating permit. For example, even after a technology has been tested, the period required by EPA to approve a permit application often exceeds 1 year. In light of the relatively small number of contaminated sites, there appears to be little incentive for the private sector to develop new technologies for destroying dioxin in soil.

In sum, reasonably good performance data in real applications are available for thermal treatment technologies for dioxin contamination. Specific incineration technologies are commercially available that will operate effectively and safely if properly managed. Promising alternatives to incineration will require further attention and resources if we wish to determine whether they can be equally effective. If they are developed, and if specific designs can be prepared and tested and proven useful, costs and other factors could be compared. Such comparisons are not possible with currently available information.

297-943 0 - 91 - 2 QL 3

Chapter 2
Thermal Treatment Technologies

Thermal technologies involve the use of heat as the primary treatment agent. During thermal destruction or incineration, organic materials in the waste are reduced to carbon dioxide (CO_2) and water vapor (both of which exit through a stack). Other chemicals such as chlorine and phosphorus are captured by the pollution control equipment, whereas noncombustible materials are captured in the ash.

The Environmental Protection Agency (EPA) began to consider incineration the preferred technology for treating dioxin-containing materials after laboratory studies showed that dioxins broke down easily when exposed to temperatures in excess of 1,200 °C.[1] To test this process on a much larger scale, EPA built a mobile research incinerator specifically designed to treat recalcitrant organic chemicals. The success of this research, in which the destruction and removal efficiency (DRE)[2] of dioxin in treated waste exceeded 99.9999 percent, led EPA to adopt thermal treatment as the appropriate method for destroying dioxin-containing waste.

Extensive research has resulted in the development of several incineration technologies. The most noteworthy in relation to dioxin treatment are rotary kilns, liquid injection, fluidized bed/circulating fluidized bed, high-temperature fluid wall destruction (advanced electric reactor), infrared thermal destruction, plasma arc pyrolysis, supercritical water oxidation, and in situ vitrification.

ROTARY KILN INCINERATION

The variety of containerized and noncontainerized solid and liquid wastes that can be treated individually or simultaneously in kiln incinerators has made this thermal technology the most versatile and popular in the United States. Rotary kilns in use today are classified into two major categories: stationary (land based) and mobile (transportable).

The key component of the system, the rotary kiln, is a refractory-lined cylinder that rotates at a horizontal angle of 5 degrees or less and at a speed of 1 to 5 feet per minute. Other features of kiln incinerators include a shredder, a waste feed system, a secondary combustion chamber or afterburner, air pollution control equipment, and a stack. Operators may also make use of auxiliary heat systems to heat the kiln to the desired operating temperature.[3]

As shown in figure 2-1, the solid and liquid wastes fed into the rotating kiln are partially burned into inorganic ash and gases. The ash is discarded in an ash bin, and the gaseous products in which uncombusted organic materials still reside are sent to the secondary combustion chamber for complete destruction.[4]

Rotary kilns in which combustion gases flow opposite to waste flow through the incinerator (called countercurrent rotary kilns) are preferred to those in which gases flow in the same direction (concurrent). Countercurrent rotary kilns have a lower

---

[1] U.S. Environmental Protection Agency, Hazardous Waste Engineering Research Laboratory, *Treatment Technologies for Dioxin-Containing Wastes*, EPA/600/2-86/096 (Cincinnati, OH: October 1986), p. 4.1.

[2] DRE is a major performance standard that, when applied to thermal treatment of dioxin-containing materials, corresponds to a destruction and removal efficiency of dioxin at a 99.9999 percent level (or "six nines"). DRE is a function relating the concentrations of a contaminant t prior to and after treatment. Because treatment residues must not contain dioxins or furans exceeding the EPA standard for land disposal (1 part per billion (ppb); see note below), it is imperative to know in advance if residues from exhaust gases, scrubber water, filter residues, and ash generated by the treatment chosen will be in compliance.

NOTE: If the dioxin waste is characterized as an acutely hazardous Resource Conservation and Recovery Act (RCRA) listed F-waste, see ch. 1, table 1-4 for treatment standards; if such material is not an F-waste, then the required level of treatment is to a dioxin concentration of less than 1 ppb 2,3,7,8-tetrachlorodibenzo-*p*-dioxin equivalents (TCDDe). For instance, when incinerating RCRA non-F waste (e.g., PCBs, pentachlorophenol), the facility operator is required to calculate DREs from measurements of chlorodibenzo-*p*-dioxins and chlorodibenzofurans (CDDs/CDFs) made in the field, followed by their conversion into TCDDe, because these contaminants are known to contain a variety of CDDS and CDFS.

[3] Calvin R. Brunner, *Incineration Systems—Selection and Design* (New York, NY: Van Nostrand Reinhold, 1984), p. 239; and U.S. Environmental Protection Agency, op. cit., footnote 1, p. 4.4,

[4] U.S. Environmental Protection Agency, op. cit., footnote 1, p. 4.4.

Figure 2-l—Rotary Kiln

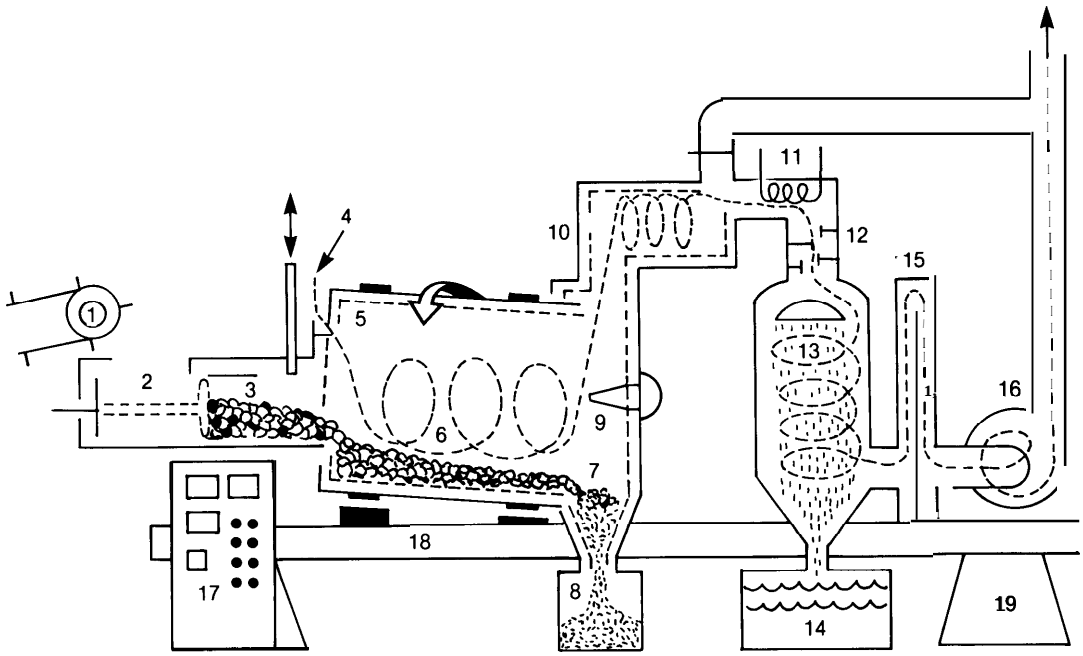

1. Material handling system
2. Auto-cycle feeding system: feed hopper, door, ram feeder
3. Waste to incinerator
4. Combustion air
5. Refractory-lined, rotating cylinder
6. Tumble-burning action
7. Incombustible ash
8. Ash bin
9. Auto-control burner package: programmed pilot burner
10. Afterburner chamber
11. Heat recuperation
12. Precooler
13. Scrubber package: stainless steel, corrosion-free scrubber
14. Recycle water, fly ash sludge
15. Neutralization column
16. Exhaust fan and stack
17. Self-compensating instrumentation and controls
18. Support frame
19. Support piers

SOURCE: Calvin R. Brunner, Incinerator Systems-Selection and *Design (New* York, NY: Van Nostrand Reinhold, 1984), p. 239.

potential for overheating because the auxiliary heat burners are located opposite the incinerator.[5]

The use of rotary kiln incineration for dioxin-containing waste is more common in Europe than in the United States. An example of this is the treatment of 2,500 kilograms of toluene still bottoms waste[6] in the CIBA-Geigy incinerator in Basel, Switzerland. This waste was from the Icmesa reactor in Seveso, Italy, and it contained approximately 600 grams of 2,3,7,8-tetrachlorodibenzo-p-dioxin(TCDD). The treatment achieved residual levels below limits of detection (0.05 to 0.2 part per billion (ppb)). Another example is the treatment of dioxin- and furan-contamin ated oils generated during the conversion of lindane waste through 2,4,5 -TCP[7] to 2,4,5-T[8], which leaked out of a landfill in Hamburg, Germany. The dioxins and furans were reported to be present in the waste at levels exceeding 42,000 p p b[9]

Stationary or Land-Based Rotary Kiln Incinerators

As the name indicates, stationary or land-based facilities are built to remain at one site. At present, several stationary rotary kiln facilities have permits to burn waste containing toxic constituents such as

[5]Ibid.

[6]This waste resulted from a process designed to produce 2,4,5 -trichlorophenol from alkaline hydrolysis of 2,3,4,6-tetrachlorophenol.

[7]2,4,5-trichlorophenol.

[8]2,4,5-trichlorophenoxyacetic acid.

[9]Harmut S. Fuhr and J. Paul E. des Rosiers, "Methods of Degradation, Destruction Detoxification, and Disposal of Dioxins and Related Compounds," *Pilot Study on International Information Exchange and Related Compounds (North* Atlantic Treaty Organization Committee on the Challenges of Modem Society, Report No. 174, August 1988), pp. 23,24-25.

those permitted under the authority of the Toxic Substances Control Act (TSCA) for polychlorinated biphenyls (PCBs); these include the Rollins Incinerator in Deer Park, Texas; the Waste Chem incinerator in Chicago, Illinois; the ENSCO incinerator in El Dorado, Arkansas; and the Aptus incinerator in Coffeyville, Kansas. To date, none of these facilities has been used to burn dioxins because of the likelihood of strong public opposition and the lack of appropriate operating permits under the Resource Conservation and Recovery Act (RCRA).[10] Only one application-submitted by Rollins in October 1988 and still awaiting EPA approval—has been filed with EPA to obtain a RCRA permit for burning dioxin-containing waste.[11] Other stationary incinerators, however, may be able to be upgraded to treat dioxins if they can satisfy permit requirements.

Other firms also have plans to build and operate such incinerators. For example, Ogden Environmental Services-in combination with American Envirotech, Inc.-plans to construct a RCRA incinerator to destroy hazardous waste at a location in Texas. Construction costs are estimated to be about $60 million, and operation is expected to begin by 1993 pending permit approval. A draft Part B RCRA permit has already been issued by the Texas Water Commission.[12] If built, this facility could eventually be used for dioxin incineration if its design meets permit requirements.

Rollins' Rotary Kiln Incinerator

An example of current stationary incinerator technology is the stationary rotary kiln incinerator facility owned by Rollins, Inc., located in Deer Park, Texas. As shown in figure 2-2, solids are conveyed or fed into a rotary kiln in 55-gallon metal or fiber drums, whereas liquid waste is atomized directly into the secondary combustion chamber or afterburner. The latter unit normally operates between 1,300 and 1,500 'C. After being burned, combustion gases are passed to a combination venturi scrubber/absorption tower for particle removal. Fans are employed to drive scrubber gases through the stack and into the atmosphere.[13] Maximum feed rates for the Rollins incinerator are l,440 pounds per hour for solids and 6,600 pounds per hour for liquids.[14]

Rollins Environmental Services already has a RCRA permit to store and dispose of hazardous waste; therefore, it intends to add only the incinerator unit to its current permit.[15] Granting of a new permit is expected within a year. According to a company official, however, the real challenge is to gain the approval of the general public and public officials to begin operations.[16] If this system is permitted, it may also be able to meet requirements for dioxin treatment.

Cost Estimates for Land-Based Rotary Kiln Incineration

No cost figures on the treatment of dioxin-containing waste are available because to date no stationary kiln has been permitted to incinerate dioxins. However, because of the similarities between PCBs and dioxins, one could expect the costs to be relatively similar to those listed in table 2-1 for the Rollins incinerator.

Mobile Rotary Kiln Incinerators

The primary purposes of designing and building a mobile (transportable) incinerator are: 1) to facilitate temporary field use for treating waste resulting from cleanup operations at uncontrolled hazardous waste sites; 2) to promote the application of cost-effective and advanced technologies; and 3) to reduce the potential risks associated with transporting waste over long distances.[17]

---

[10] Jerry Neill, Rollins Environmental Services, Texas, personal Communication Jan. 9, 1991 and July 16, 1991; Diane Schille, APTUS, Kansas, personal communication, July 11, 1991; Keith Paulson, Westinghouse Environmental Systems and Services Division, Pittsburgh, personal communication Feb. 11, 1991; U.S. Environmental Protection Agency, op. cit., footnote 1, p. 4.9.

[11] Neill, op. cit., footnote 10.

[12] Press release issued by Ogden Projects, Inc., Oct. 22, 1990.

[13] Ibid., p. 4.5.

[14] Ibid., p. 4.15.

[15] Because of difficulties in obtaining permits, most companies now apply fo, regional or national, rather than statewide, permits under TSCA for burning PCBs and PCB-contaminated waste. Unlike TSCA, RCRA authorizes EPA to grant only site-specific permits for treating dioxin-containing waste.

[16] Neill, op. cit., footnote 10.

[17] U.S. Environmental Protection Agency, Risk Reduction Engineering Laboratory, "EPA's Mobile Incineration System for Cleanup Of Hazardous Wastes-Fact Sheet," January 1989.

Figure 2-2—Rollins Environmental Services Rotary Kiln Incineration System

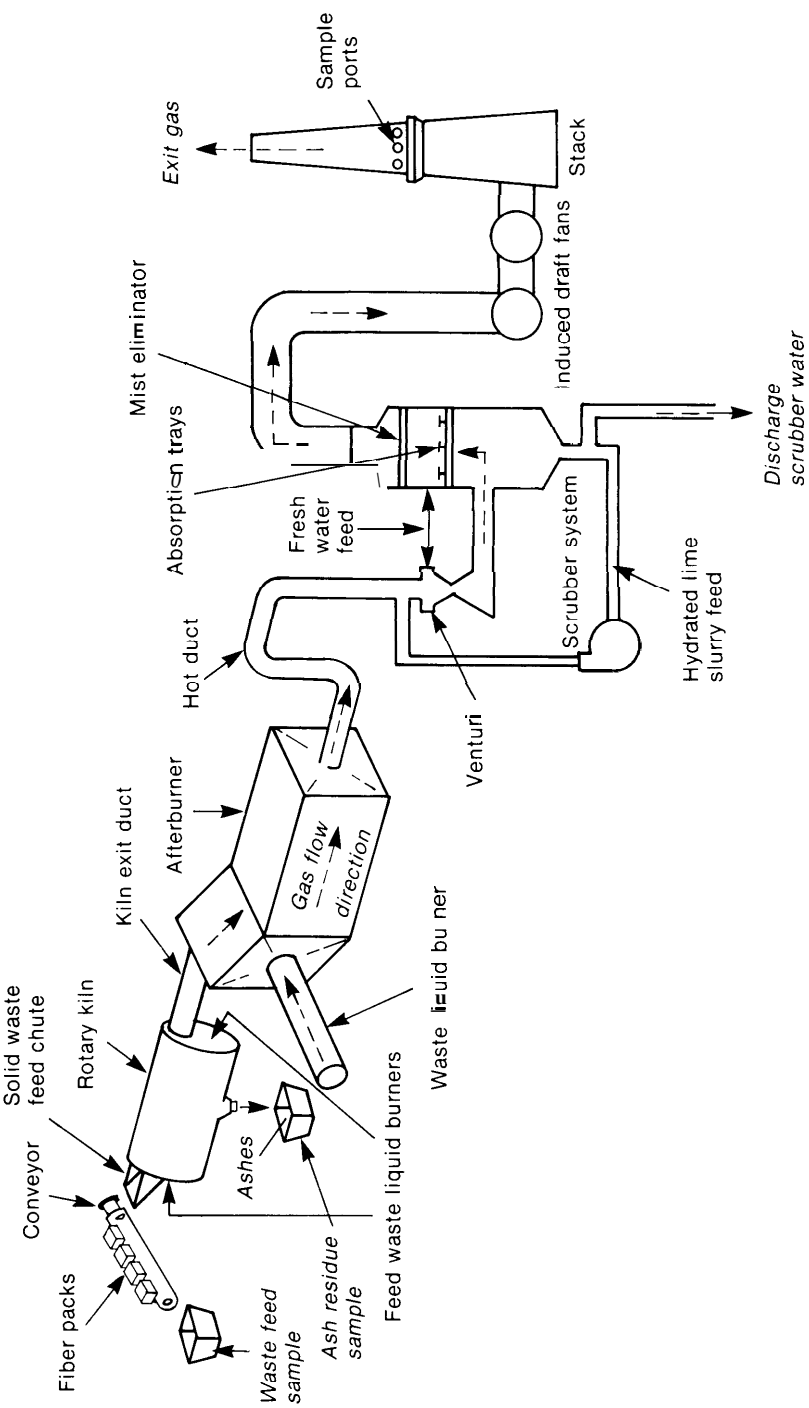

SOURCE: U.S. Environmental Protection Agency, Hazardous Waste Engineering Research Laboratory, *Treatment Technologies for Dioxin-Containing Wastes*, EPA/600/2-86/096 (Cincinnati, OH: October 1986).

Table 2-l—Estimated Average Cost Per Pound To Incinerate PCB Waste

Concentration (ppm)[a]	Liquids	Solids
0-50	*$0.25*	*$0.40*
50-1,000	*$0.30*	*$0.45*
1,000-10,000	$0.35	$0.50
10,000-100,000	$0.40	$0.60
100,000	$0.45	$0.70

[a]ppm = parts per million.

SOURCE: U.S. Environmental Protection Agency, Hazardous Waste Engineering Research Laboratory, *Treatment Technologies for Dioxin-Containing Wastes, EPA/600/2-86/096* (Cincinnati, OH: October 1986), p. 4.14.

History of EPA's Mobile Incinerator

In 1985, EPA sponsored research on dioxin incineration technology by using a stationary facility in Jefferson, Arkansas to conduct pilot-scale studies.[18] Two burns of waste containing dioxin-contaminated toluene still bottoms from the Vertac Chemical facility in Jacksonville, Arkansas were performed in late 1985 in a rotary kiln research unit. Although monitoring and sampling detection limits were too high at both waste burns,[19] EPA concluded that rotary kiln incineration technology could be utilized in the destruction of dioxin if emission controls were improved. Results of the tests included the following:

- concentration levels of the most toxic dioxin species (2,3,7,8 -TCDD) were found to be negligible in scrubber blowdown water (1 part per trillion (ppt)) and kiln ash;
- most dioxin forms were undetected at the detection limits used; and
- no tetra-, penta-, hexa-, or heptachlorodibenzo-p-dioxins or chlorodibenzofurans were detected in kiln ash samples at detection limits of 1.3 to 37 ppt.[20]

In light of these results, EPA concluded that residues from incineration treatment of dioxin- and furan-contaminated materials with this type of system could be considered nonhazardous.[21] [22]

After these early tests in Arkansas, EPA developed a mobile incinerator system with equivalent technology specifically to treat dioxin-contaminated material.

After successful trial burns of the mobile incinerator in Edison, New Jersey and laboratory studies to establish optimum conditions for soil incineration, the EPA mobile incinerator was transferred in 1985 to the Denney Farm site in Missouri for a series of tests using 2,3,7,8 -TCDD. At the conclusion of the experiment, EPA had achieved DREs of 99.9999 percent, with process wastewater and treated soil containing dioxins at insignificant levels. To date, the EPA mobile incinerator unit, the best known transportable rotary kiln in the United States, has successfully incinerated more than 12 million pounds of dioxin-contaminated soil and 230,000 pounds of dioxin-contaminated liquid waste.[23] The presence of state-of-the-art pollution control systems, claim cleanup experts, makes mobile (transportable) incinerators less controversial and safer than other systems that have not had the same design and development attention.[24]

Although EPA has invested more than $10 million in this unit, other mobile incinerator systems have been constructed at much lower costs through the experience and data gained from it. Research with the mobile unit was instrumental in the design and modification of several incineration components, including enlargement of the feeding system, reduction in gas velocity, addition of cyclones between kiln and afterburner so that less material accumulates in the latter, and addition of a venturi

[18]R.W. Ross II et al., Acurex Corp., Energy and Environmental Division, "Combustion Research Facility: Pilot-Scale Incineration Test Burn of TCDD-Contaminated Toluene Stillbottoms From Trichlorophenol Production From the Vertac Chemical Co," paper prepared for the U.S. Environmental Protection Agency, Office of Research and Development, Hazardous Waste Engineering Research Laboratory, under EPA contract No. 68-03-3267, Work Assignment O-2, Acurex Technical Report TR-86-100/EE, January 1986; Richard A. Carries and F.C. Whitmore, "Characterization of the Rotary Kiln Incinerator System of the U.S. EPA Combustion Research Facility (CRF)," *Hazardous* Wrote, vol. 1, No. 2, 1984, pp. 225-236.

[19]Other problems encountered were clogging of the waste feed system and malfunction of the emission monitoring system.

[20]U.S. Environmental Protection Agency, op. cit., footnote 1, pp. 4.12413.

[21]For additional information on EPA's research incinator facility, see also: Carnes and Whitmore, op. cit., footnote 18, and R.W. Ross, II, F.C. Whitmore, and R.A. Carries, "Evaluation of the U.S. EPA CFR Incinerator as Determined by Hexachlorobenzene Incineration' Hazardous *Waste*, vol. 1, No. 4, 1984, pp. 581-597.

[22]At the time of this pilot study, however, EPA screening levels had not been promulgated; they had only been proposed in the *Federal Register*. [For details, see "Hazardous Waste Management System; Land Disposal Restrictions; Proposed Rule," 51 *Fed. Reg.* 1602 (1986)]

[23]G.D. Gupta, "Mobile Incinerator for Toxic Wastes," *Environmental Science & Technology*, vol. 24, No. 12, 1990, p. 1776.

[24]Patrick Phillips, Executive Vice-President, Vesta Technologies, Ltd., personal communication, Mar. 25$1991.

and wet electrostatic precipitators to reduce air emissions.[25]

The EPA system is designed to achieve full combustion of organic, inorganic, and debris materials, including halogenated compounds such as PCBs and dioxins.[26] Several existing commercial mobile incinerator facilities are based on the EPA system.

Components of EPA's Mobile Incinerator

The EPA mobile incinerator system consists of specialized incineration equipment mounted on four heavy-duty semitrailers and auxiliary pads. The first ***trailer*** contains: 1) a waste feed system for solids, consisting of a shredder, a conveyor, and a hopper (liquids are injected directly into the afterburner); 2) burners; and 3) the rotary kiln.[27] Organics are burned in this portion of the system at about 1,600 'C.

Once the waste has been incinerated, incombustible ash is discharged directly from the kiln, and the gaseous portion of the waste-now fully vaporized and completely or partially oxidized-flows into the secondary combustion chamber or ***second trailer in*** which it is completely oxidized at 2,200 'F (1,200 'C) and a residence time of 2 seconds. Flue gas is then cooled by water sprays to 190 'F, and excess water is collected in a sump.

Immediately after being cooled, the gas passes to the ***third trailer*** on which the pollution control and monitoring equipment is located. At this junction, gases pass through a wet electrostatic precipitator (WEP) for removal of submicron-sized particles and an alkaline mass-transfer scrubber for neutralization of acid gases formed during combustion. Cleaned gases are drawn out of the system through a 40-foot-high stack by an induced-draft fan whose other function is to keep the system under negative pressure to prevent the escape of toxic particles. Efficient and safe system performance is maintained through the use of continuous monitoring instrumentation, which includes computerized equipment and multiple automatic shutdown devices.[28]

The EPA mobile incinerator unit consumes 15 million British thermal units (Btu) per hour and handles up to 150 pounds of dry solids, 3 gallons of contaminated water, and nearly 2 gallons of contaminated fuel oil per minute.[29] It is concurrently located at EPA's Edison Laboratory in Edison, NJ. EPA no longer plans to employ it for combustion of waste.[30]

Commercially Available Mobile Rotary Kiln Incinerators

Only a few private companies have actually built and operated mobile incinerators for dioxin treatment using EPA research as a base. The ***ENSCO Corp.,*** Little Rock, Arkansas, has designed and built three modified versions of the EPA model, which include improvements in waste handling and particle removal. One unit was used for cleaning up waste contaminated with chlorinated organics near Tampa, Florida; a second unit is located at El Dorado, Arkansas (also the location of ENSCO's stationary kiln incinerator). The third is not currently in use.

Available ENSCO units are capable of treating 150 gallons of liquid waste and 2 to 6.3 tons of dioxin-contaminated solid waste per hour. Results of tests conducted on an ENSCO unit by the U.S. Air Force at the Naval Construction Battalion Center, Gulfport, Mississippi, indicate that this transportable incinerator could remove and destroy dioxins from contaminated soils at DREs greater than 99.9999 percent.[31]

Another private company that has built mobile incinerators is ***Vesta, Inc.,*** of Ft. Lauderdale, Florida. This firm has three transportable incineration units capable of treating dioxin-contaminated soil at a maximum estimated rate of 5 tons per hour.[32] Treatment of soil, liquid, or sludge is accomplished in a two-stage incineration process (countercurrent rotary kiln; cocurrent secondary combustion cham-

'Paul E. des Rosiers, "Advances in Dioxin Risk Management and Control Technologies," *Chemosphere,* vol. 18, Nos. 1-6, 1989, pp. 45-46.

[26]U.S. Environmental Protection Agency, op. cit., footnote 17.

[27]U.S. Environment Protection Agency, op. cit., footnote 1, p. 4.16.

[28]Ibid., pp. 4.16-4.18; U.S. Environmental Protection Agency, op. cit., footnote 17.

[29]U.S. Environmental Protection Agency, op. cit., footnote 1, p. 4.16.

[30]Paul E. des Rosiers, Chairman, Dioxin Disposal Advisory Group, U.S. EPA, personal communication June 10, 1991,

[31]Fuhr and des Rosiers, op. cit., footnote 9, pp. 29-30; U.S. Environment Protection Agency, op. cit., footnote 1, p. 4.16; and des Rosiers, Op. Cit., footnote 25.

[32]Phillips, op. Cit., footnote

ber) followed by ahigh-efficiency multistage scrubbing process. Vesta systems can be deployed in about 24 hours; longer setup times are needed when incinerator and prepared stockpiles require covering with inflatable tent-like structures to avoid delays due to inclement weather. Decontamination and demobilization of the entire process maybe accomplished in less than 72 hours. Operations may be conducted by using liquid propane gas, liquid oxygen, fuel oil, or any waste or waste blend considered suitable. Examples of dioxin-contaminated sites at which Vesta's transportable incinerators have been used successfully include American Cross Arms Site (Chehalis, Washington), Fort A.P. Hill (Bowling Green, Virginia),[34] Rocky Boy Post& Pole Site (Rocky Boy, Montana), and Black Feet Post & Pole Site (Browning, Montana).[34]

Cost Estimates for Mobile Rotary Kiln Incineration

Among the factors that must be taken into consideration in developing cost figures for mobile (transportable) incineration are:

- the throughput capacity of the system;
- the caloric content (Btu) and moisture content of the waste because they determine the feed rates that can be maintained;
- the maintenance and consistency of uninterrupted operations; and
- the duration of operation (the longer it is, the higher are the costs).

Setup costs incurred by design requirements and permitting processes also play very important roles; however, they vary from one site to another.[35] One firm reports that mobile incineration operating and maintenance costs can range from $400 to $600 per ton of waste treated.[36]

LIQUID INJECTION INCINERATION TECHNOLOGY

Liquid injection (LI) is not currently available for dioxin treatment, but it has been used aboard ships for ocean-based incineration of Agent Orange. It is also employed in many industrial and manufacturing sectors for treatment of hazardous organic and inorganic wastes. As shown in figure 2-3, the typical LI incinerator consists of a burner, two combustion chambers (primary and secondary), a quench chamber, a scrubber, and a stack. Vertical LI incinerators are preferred for treating liquid waste rich in organics and salts (and therefore ash) because the incinerator unit can be used as its own stack to facilitate the handling of generated ash. Portions of the vertical LI unit can also be used as a secondary combustion chamber. The horizontally shaped LI units are connected to a tall stack and are preferred for treating liquid waste that generates less ash. In both systems, the use of external waste storage and blending tanks helps maintain the waste in a homogeneous form and at a steady flow.[37]

Some of the limitations that must be considered before applying LI incineration to dioxin destruction include the following:

- LI systems are applicable only to combustible low-viscosity liquids and slurries that can be pumped;
- waste must be atomized prior to injection into the combustor; and
- particle size is critical because burners are susceptible to clogging at the nozzles.[38]

---

[33] At this U.S. Army installation, Vesta successfully treated 189 cubic yards (more than 190 tons) of soil that had been contaminated by corroding storage drums containing the dioxin-bearing herbicides Silvex; 2,4-dichlorophenoxyacetic acid (2,4-D); and 2,4,5-trichlorophenoxyacetic acid (2,4,5-T). Ritu Chaudhari, A.W. Lemmon, and J. Towarnicky, "Dioxin Destruction on a Small Scale-A Success Story," paper presented at the Sixth Annual DOE MODEL Conference, Oak Ridge, TN, Oct. 29 to Nov. 2, 1990; Letter from Dennis J. Wynne, Department of the Army, U.S. Army Toxics and Hazardous Materials Agency, Aberdeen Proving Ground, MD, to Paul E. des Rosiers, U.S. EPA, Office of Research and Development, with enclosure on the U.S. Department of the Army's "Remediation of Contamination at Fort A.P. Hill," dated May 22, 1989. For additional information see Metcalf & Eddy, Inc., *Report on the Remedial Action Fort A.P. Hill Site—Final Report* (Contract No. DAAA15-86-D 0015; Task Order-7), Mar. 16, 1990; prepared for Commander, U.S. Army Toxic and Hazardous Materials Agency, Aberdeen Proving Ground (Edgewood Area), MD; U.S. Army Training and Doctrine Command, Office of the Command Historian, *The Dioxin Incident at Fort A.P. Hill, 1984-1985 (Fort* Monroe, VA: U.S. Army Training and Doctrine Coremand, July 1987).

[34] Vesta Technologies, Ltd., "VESTA 80—Technology Specifications," August 1989; "VESTA 100—Technology Specifications," August 1989; "Vesta Project Profiles," undated, pp. 1, 2-3; "Performance History," undated; "Burning Facts," undated.

[35] U.S. Environmental Protection Agency, op. cit., footnote 1, p. 4.30.

[36] Phillips, op. cit., footnote 24.

[37] U.S. Environmental Protection Agency, op. cit., footnote 1, p. 4-32.

[38] Ibid., pp. 4.32-4.34; see also Timothy E. Oppelt, "Incineration of Hazardous Waste: A Critical Review," *Journal of the Air Pollution Control Association* (JAPCA), vol. 37, No. 5, pp. 558-586.

Figure 2-3-Vertically Oriented Liquid Injection Incinerator

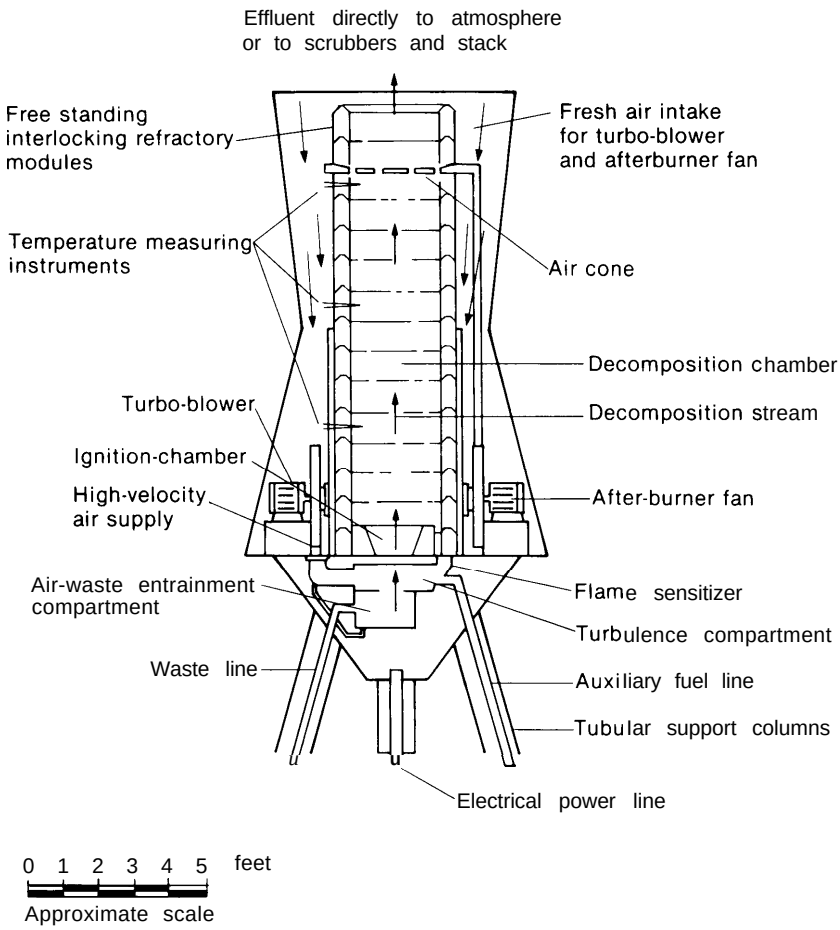

SOURCE: U.S. Environmental Protection Agency, Hazardous Waste Engineering Research Laboratory, *Treatment Technologies for Dioxin-Containing Wastes, EPA/600/2-86/096*(Cincinnati, OH: October 1986).

The only documented use of liquid injection technology in the United States for dioxin destruction comes from the burns that took place aboard the ocean incinerator M/T ***Vulcanus in the summ***er of 1977. This facility consisted of:

- a modified LI system;
- two LI incinerators at the stern;
- a combustion chamber and a stack for each incinerator;
- electrical pumps for sending the waste to the combustion chamber; and
- a blending device for mixing and reducing solids to a pumpable slurry.[39]

Although land-based LI facilities must install scrubbers to remove acid gases (particularly hydrogen chloride), the M/T ***Vulcanus*** was not required to on the assumption that acidic gases resulting from combustion would be absorbed and neutralized by the ocean. Some operating parameters included: 1) a flame temperature of 1,375 to 1,610 'C, 2) a furnace wall temperature of 1,100 to 1,200 'C, and 3) a residence time of 1 to 2 seconds. Results of the EPA-sponsored trial burns indicated that the ocean incinerator's destruction of dioxin averaged more than 99.93 percent DRE. A subsequent EPA-sponsored trial burn of PCBs in August 1982

[39]U.S. Environmental Protection Agency, op. cit., footnote 1, pp. 4.32-4.34. See also T.A. Wastler, C.K. Offutt, C.K. Fitzsimmons, and P.E. des Rosiers, ***Disposal of Organochlorine Wastes at Sea, EPA-43019-75-014,*** July 1975; D.D. Ackerman et al., ***At-Sea Incineration of Herbicide Orange Onboard the MIT Vulcanus, EPA-60012-78-086,*** April 1978.

revealed no TCDDs in the stack gas (based on a 2- to 22-ppb detection limit).[40 41]

No data exist on the burning of dioxins at land-based liquid injection incinerators. Existing LI units that may be able to burn dioxins most effectively (i.e., with a 99.9999 percent DRE) include General Electric's thermal oxidizer (in Pittsfield, Massachusetts) and LI incinerator (in Waterford, New York) permitted to burn PCBs, and Occidental Chemical's LI unit currently employed for burning hazardous leachate from the Hyde Park Superfund site in New York.[42]

Cost Estimates for Liquid Injection Incineration

As for most incineration methods, the cost of liquid injection depends on the type of waste to be treated. Aqueous, low-Btu waste costs more to incinerate because of increased heat energy or fuel requirements; highly halogenated waste also costs more to incinerate because a scrubber is required to remove acid gases formed during combustion. In 1986, EPA reported that the typical cost for the treatment of halogenated solvents containing more than 50 percent waste was $200 per metric ton. In the same report, EPA indicated that LI treatment of PCB-contaminated oil would cost more than $500 per metric ton because of the "six-nines" DRE requirement and suggested that, because of similar performance requirements, treatment costs of incinerating liquid dioxin waste would be approximately the same.[43] More recent estimates indicate that the cost of LI treatment for dioxin-contaminated liquid waste could be much higher than for PCB-containing waste.[44]

FLUIDIZED-BED INCINERATION

Traditionally, fluidized-bed combustion systems (FBCs) were employed for the treatment of sludge produced by municipal waste treatment plants and waste generated from oil refineries, pulp and paper mills, and the pharmaceutical industry. Today, about 25 FBCs are operating in the United States and Europe; only a few of them are used commercially to treat hazardous waste. None are available for dioxin treatment, but with certain design improvements, some experts believe they have the potential for this application.

The FBC system consists of a vertical refractory-lined vessel holding a perforated metal plate on which abed of granular material (preferably sand) is located. Bed particles are fluidized by forcing hot air up through the medium to create a highly turbulent zone that ensures the mixing of waste materials with bed particles and combustion air. Startup temperatures are reached by use of a burner located above the bed; once heated, the bed material causes the waste to combust. Solid noncombustible materials in the waste become suspended and exit into a cyclone for particle removal; exhaust gases flow into the afterburner for additional combustion.[45] Particular attention must be paid to the type and size of materials to be incinerated because variations in gravity and density could be deleterious to the process.[%]

The fluidized-bed incinerator system has been modified on several occasions; the two systems with the highest potential for dioxin treatment (one designed by Waste-Tech Services and the other by General Atomics Technologies[47]) are discussed below.

Waste-Tech Services System

In August 1985, Waste-Tech Services, Inc.,[48] of Golden, Colorado, designed and built its modified fluidized-bed incineration unit, which uses a granular bed composed of a mixture of combustion

---

[40] U.S. Environment protection Agency, op. cit., footnote 1, pp. 432,4.34-4.37.

41 For additional information on the formation and destruction of dioxins at ~/T *Vulcanus*, see: N.C.A. Weerasinghe, J.L. Meehan, M.L. Gross, and R.L. Harless, "The Analysis of Tetrachlorodibenzo-*p*-dioxins and Tetrachlorodibenzofurans in Chemical Waste and in the Emissions From Its Combustion." L.H. Keith, C. Rappe, and G. Choudhary, *Chlorinated Dioxins & Dibenzofurans in the Total Environment* (Stoneham, MA: Butterworth Publishers, 1983), pp. 425-437.

[42] U.S. Environmental Protection Agency, op. cit., footnote 1, pp. 4.38-4.40.

[43] U.S. Environmental Protection Agency, op. cit., footnote 1., p. 4.38.

*ales Rosiers, op. cit., footnote 30.

[45] U.S. Environmental Protection Agency, op. cit., footnote 1, p. 4.41.

[46] Phillips, op. cit., footnote 24.

[47] This system is marketed by Ogden Environmental Services, San Diego, CA.

[48] Waste-Tech Services, Inc., is an affiliate of the Amoc(Oil Holding Co.

Figure 2-4-Schematic Diagram of the Waste-Tech Incineration Process

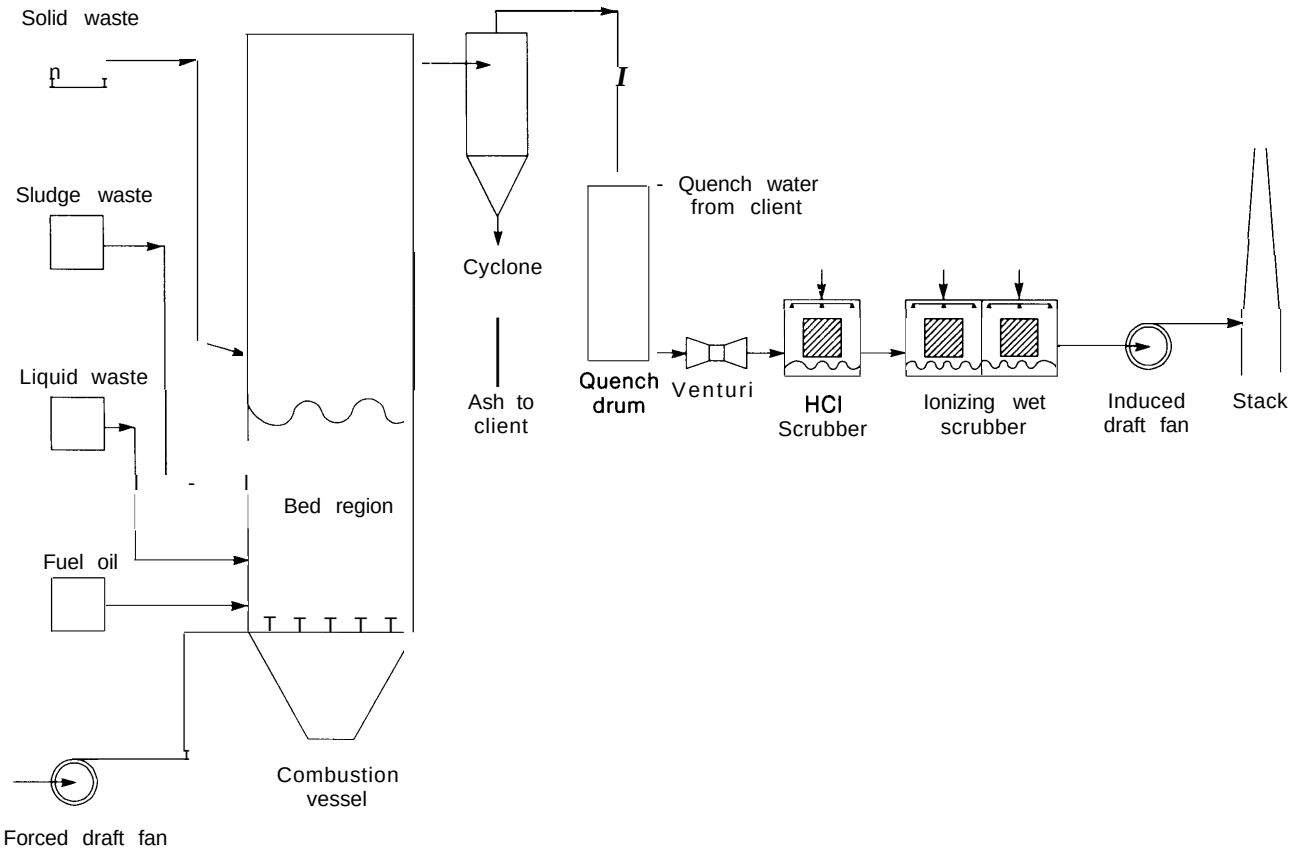

SOURCE: Charles D. Bartholomew and R.W. Benedict, Waste-Tech Services, Inc., "Performance of a Fluidized Bed Hazardous Waste Thermal Oxidation System," paper presented at the 81st Annual Meeting of the Air Pollution Control Association, Dallas, TX, June 19-24, 1988,

catalyst and limestone rather than sand. This unit is presently located at a plant that manufactures chlorinated chemicals in Lake Charles, Louisiana.[49] With a thermal rating of 22 million Btu per hour,[50] the Waste-Tech unit is composed of multiple feed systems, a fluidized bed,[51] secondary combustion chambers, air pollution control equipment, and ancillary support equipment for removing cyclone ash, fugitive emissions in storage tank area, and scrubber blow-down water.[52] Figure 2-4 is a schematic of the Waste-Tech incineration process.

A feature that makes this treatment technology highly attractive is its ability to sustain continuous addition of limestone and extraction of bed material during operations; this, in turn, allows the system to operate at lower temperature, thus reducing fuel consumption.[53]

During a RCRA Part B trial burn conducted in October 1987, to demonstrate its operability, the Waste-Tech unit was tested under varying operating conditions (e.g., temperature, feed rate, chlorine

[49]Charles D. Bartholomew and R.W. Benedict, Waste-Tech Services, Inc., "Performance of a Fluidized Bed Hazardous Waste Thermal Oxidation System," paper presented at the 81st Annual Meeting of the Air Pollution Control Association, Dallas, TX, June 19-24, 1988.

[50]Letter from Francis M. Ferraro, Manager Technology Applications, Waste-Tech Services, Inc., to German Reyes, Office of Technology Assessment, Feb. 11, 1991.

[51]The bed is approximatel, 3 feet deep, with fluidizing velocities ranging between 6 to 8 feet per second.

[52]Bartholomew and Benedict, op. cit., footnote 49, P. 2.

[53]U.S. Environmental Protection Agency, op. cit., footnote 1., P. 4.41.

loading, and particulate loading) with chlorinated waste containing carbon tetrachloride, tetrachloroethane, and p-dichlorobenzene. Dioxins and furans were also tested. With one exception, all bed ash tests showed no measurable amount of any of the chlorinated pollutants treated. No 2,3,7,8 -TCDD was detected in any of the four samples tested.[54]

On the basis of the results obtained during the trial burn, company officials feel that the "fluidized bed combustion system is a viable technology for the destruction of hazardous wastes.' '[55] Currently, Waste-Tech is concentrating its efforts on obtaining a TSCA operating permit for treating PCBs and PCB-contaminated material.[56]

Ogden's Circulating-Bed Combustor (CBC) [57]

The second modification of the fluidized-bed system with good potential for dioxin destruction is the circulating-bed combustor (CBC), designed and built by General Atomics Technologies, Inc. (G.A. Technologies, Inc.) and now the property of Ogden Environmental Services, Inc., San Diego, California. Some unique characteristics of this system (shown in figure 2-5) include its high-velocity combustion medium and, more significantly, the utilization of contaminated soil as bed material. In 1986, EPA referred to the Ogden system as "[appearing] to have significant potential for future use in the destruction of hazardous wastes"[58] today, Ogden holds an operating permit from EPA (under TSCA)[59]

The high-velocity air flow of the system (three to five times higher than conventional fluidized-bed systems) suspends the bed solids, creating a high-turbulence zone (800 to 1,100 'C) into which solid or liquid waste is poured for treatment. Rapid movement of the bed particles and waste materials in turn promotes more efficient combustion at lower temperature, without the need for an afterburner. Residence times are generally 2 seconds for gases and 30 minutes for solids.[60]

The major components of Ogden's CBC incineration system axe:

- **a** startup combustor burner, which uses natural gas and is off after waste ignition;
- a combustor consisting of a refractory-lined carbon steel tube;
- a cyclone, which is a carbon steel and refractory-lined device responsible for both filtering and recirculating uncombusted bed materials in the suspended gases;
- a flue gas cooler for cooling the off-gases; and
- a baghouse filter that collects the suspended particulate matter of incomplete combustion.[61]

All parts making up the Ogden CBC system can be transported in 17 flatbed trucks; requiring only 2,500 square feet of space to operate and approximately 3 weeks to set up. Ogden Environmental Services currently offers CBC treatment units in a variety of sizes, the smallest being its 16-inch-diameter combustor with a thermal rating of 2 million Btu per hour. Construction of a 36-inch-diameter combustor is now being planned.[62]

Advantages of the Ogden units include the following:

- . the absence of moving parts in the combustor to ensure greater reliability;
- simpler operation demanding smaller crews;
- no requirement for scrubbers;
- . low-temperature operation that reduces fuel consumption and eliminates the need for an afterburner; and

---

[54]Bartholomew and Benedict, op. cit., footnote 49, p. 5-6.

[55]Ibid., p. 9.

[56]Francis M. Ferraro, Waste-Tech Services, Inc., Lakewood, CO, personal communication, Feb. 24, 1991.

[57]See also: H.H. Yip and H.R. Diot, "Circulating Bed Incineration," Hazardous Materials Management Conference, Toronto, Ontario, September 1987; H.R. Diet and H.H. Yip, "Transportable Circulating Bed Combustor for Thermal Treatment of Hazardous Liquids, Sludges, and Soils," Ogden Environmental Services, Inc., September 1987; U.S. Environmental Protection Agency, Office of Research and Development *The Superfund Innovative Technology Evaluation Program: Technology Profiles,* EPA 540/5-90/006 (Washington DC: EPA, November 1990), pp. 64-65.

[58]U.S. Environmental Protection Agency, op. cit., footnote 1., P. 449.

[59]Ogden Environmental Services, Inc., "Circulating Bed Combustion+' undated.

@ales Rosiers, op. cit., footnote 25, P. 47.

[61]U.S. Environmental Protection Agency, op. cit., footnote 1, pp. 4.43,4.49.

[62]Ben Warner, "Ogden' 's Successful 'New Image' Combustor," *WasteAlternatives,* December 1989; and, OgdenEnvironmental Services, Inc., "Site Remediation. . . PCB Contaminated soil," undated.

Figure 2-5—Circulating-Bed Combustion System Offered by Ogden Environmental Services, San Diego, CA

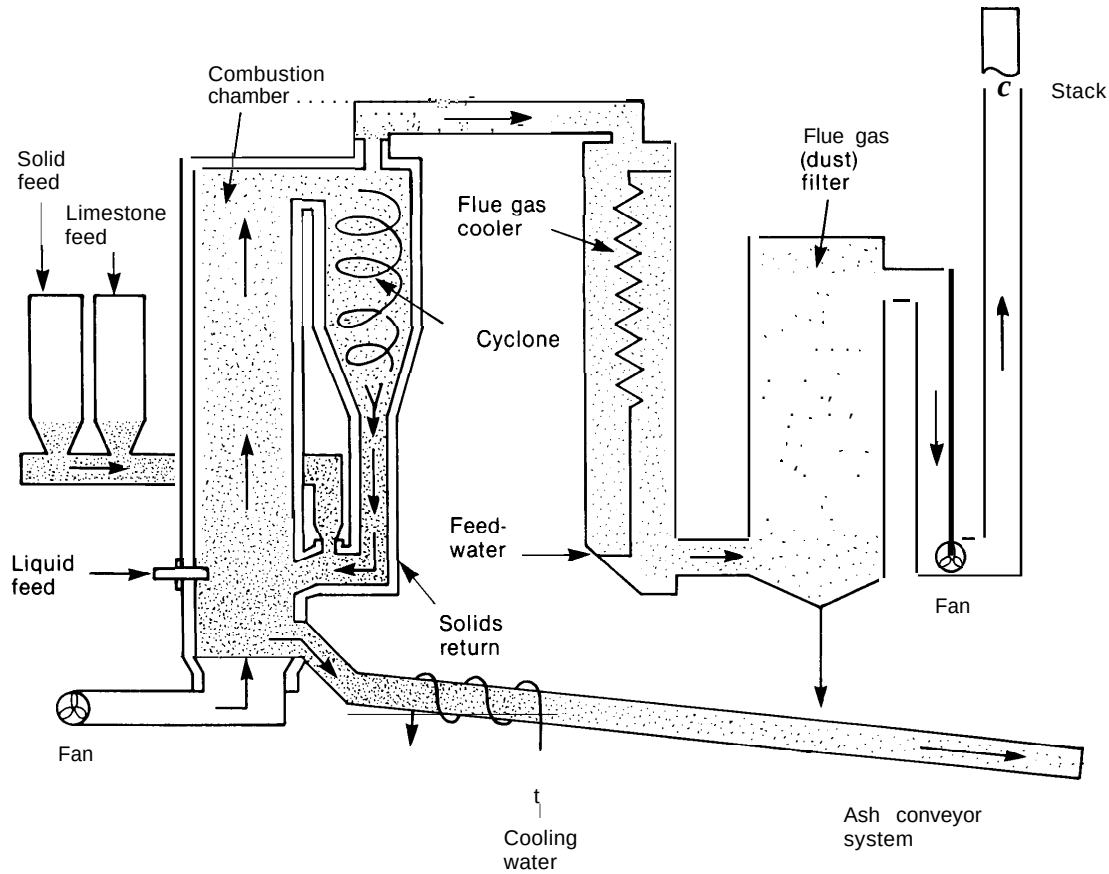

SOURCE: **Ogden Environmental Services, Inc., "Circulating Bed Combustion," undated.**

. **the** ability to treat dioxin-containing liquid, soil, or sludge waste.[63]

The Ogden CBC system uses high-velocity air to fluidize the bed particles and create a highly turbulent combustion loop. Solids are introduced at a point between the cyclone and the combustion chamber and are immediately swept to the bottom of the combustion chamber. Liquids are injected directly into the combustion zone. The increasing circulating flow of hot air and hot suspended particles around the loop formed by the combustion chamber, cyclone, and return leg maintains a high temperature throughout, thus eliminating the need for an afterburner (see figure 2-5).[64]

Bottom ash is removed from the system on a continuous basis, cooled in a water-cooled screw conveyor, and solidified or packed in drums for final disposition.[65] Hot exhaust gases from the cyclone are passed through the flue gas cooler; once cooled, they are filtered in the baghouse before exiting through the stack. DREs of 99.9999 percent have been achieved with soil containing about 12,000 parts per million (ppm) PCBs.[66]

[63]Ogden Environmental Services, Inc., op. cit., footnote 59.

[64]Fuhr and des Rosiers, op. Cit., footnote 9, p. 35.

[65]U.S. Environmental Protection Agency, op. cit., footnote 1, pp. 4.43, 4.49; des Rosiers, op. cit., footnote 25, p. 47; and Ogden Environmental Services, Inc., op. cit., footnote 59.

[66]des Rosiers, op. cit., footnote 25, p. 47; U.S. Environmental Protection Agency, op. cit., footnote 57, p. 64.

Testing and Availability of Ogden's **CBC** Technology

Prior to its incorporation into Ogden Environmental Services, G.A. Technologies conducted three trial bums on its stationary pilot-scale unit using soil contaminated with PCBs at levels ranging from 9,800 to 12,000 ppm. Test results demonstrated the ability of the system to meet the destruction and removal standard of 99.9999 percent for incinerating chlorinated waste.[67]

Under Ogden's ownership, CBC technology was tested in 1988 at the Swanson River oil field, Kanai Peninsula, Alaska. The successful achievement of DREs greater than "six nines" was primarily responsible for issuance of a national permit by EPA under TSCA in June 1989.[68]

Ogden has five separate National, State, and local permits; the national permit is one of seven granted by EPA to incinerator facilities in the United States for PCB burning.[69] A summary of existing and planned portable CBC units offered by Ogden is presented below:

- One unit, located in Stockton, California, is part of a soil remediation project involving the cleanup of soil contaminated with fuel oil. A total of 80 to 100 tons of soil is treated and disposed of daily.
- Another unit is operating at Alaska's Swanson River oil field (Kanai Peninsula) to remove and treat about 75,000 tons of PCB-contaminated soil. Completion of the Swanson River project is scheduled for the end of 1991.
- Two additional transportable units are now being built (one of which will be dealing with a coal tar remediation project in California).
- Ogden is also planning to build smaller systems for permanent onsite application, particularly the treatment of waste streams at chemical and petroleum plants.[70]

Cost Estimates for Fluidized-Bed Incineration

Although costs for conventional fluidized-bed systems depend largely on factors such as fuel requirements, scale of equipment, and site conditions, they are for the most part comparable to those of rotary kiln incineration.

The cost of circulating-bed combustion treatment, on the other hand, is considered by EPA to depend more on the size of the incinerating unit and the waste types requiring treatment.[71] For example, installing a 25-million-Btu-per-hour unit costs $1.8 to $2.0 million, with an annual operating cost of ***$0.25 million*** for chlorinated organic sludge, $0.35 million for wet sludge, and $0.35 million for contaminated soil. Circulating bed incineration treatment costs per ton of material treated are therefore **$60,** $32, and $27 respectively.[72] Costs for PCB-contaminated soil, such as that being treated at Swanson River, Alaska, are estimated to range between $100 and $300 per ton.[73] The costs of dioxin treatment are not available. According to a company official, the cost of processing more than 20,000 tons of soil in 1991 is approximately $250 per ton; this price includes site preparation.[74]

HIGH-TEMPERATURE FLUID WALL DESTRUCTION—ADVANCED ELECTRIC REACTOR (AER)

Advanced electric reactor (AER) technology is not available commercially, but R&D shows that it may have potential for dioxin treatment. A typical system consists of a porous tube (primarily graphite) or reactor enclosed in a hollow cylinder. To radiate heat to the waste, the reactor uses radiant energy provided by heated carbon electrodes. Waste is prevented from coming in contact with the reactor core by a blanket of nitrogen flowing countercur-

[67] Ogden Environmental Services, Inc., op. Cit., footnote 59.

[68] Ogden Environmental Service, Inc., op. cit., footnote 59; and Harold R. Diot, Ogden Environmental Services, "Circulating Fluidized Bed Incinerators for Site Remediation: An Update on Ogden's Successes," March 1990.

[69] Warner, op. cit., footnote 62; U.S. Environmental Protection Agency, op. cit., footnote 59, pp. 64-65.

[70] Warner, op. cit., footnote 62.

[71] U.S. Environment Protection Agency, op. cit., footnote 1, p. 4.49.

[72] Ibid., p. 4.51.

[73] Brenda M. Anderson and Robert G. Wilbourn, Ogden Environment@ Services, "Contaminated Soil Remediation by Circulating Bed Combustion: Demonstration Test Results,' November 1989, p. 7.

[74] Sharin Sexton, Ogden Environmental Services, Inc., San Diego, CA, personal communication, Jan. 25, 1991.

rently upward through the porous core walls.[75] Although originally designed by Thagard Research (Costa Mesa, California), this technology is known as the Huber process because of proprietary modifications incorporated into the original design by J.M. Huber Corp. (Huber, Texas). Figure 2-6 shows the major components of AER technology.

During processing, liquid or solid waste is poured through an airtight feed bin or nozzle located at the top of the reactor. After passage through the heated reactor (about 4,500 'F), pyrolyzed waste products and gases are sent to two post-treatment chambers. Whereas the first chamber is designed to provide additional combustion heat (about 2,000 'F), the second cools the off-gases.

Once cooled, gases are passed through a pollution control system composed of four major devices: a cyclone for collecting particles that did not fall into the solids bin, a bag filter for removing fine particles, an aqueous caustic scrubber for removing acid gases and free chlorine, and an activated carbon bed. In AER technology, activated carbon beds are used primarily to remove trace residues of chlorine and organic compounds.[76]

Some of the advantages of AER considered relevant to dioxin treatment include the following: 1) waste is destroyed by pyrolysis rather than by oxidation as in rotary kiln incinerators; and 2) the extremely lower gas flow rates[77] and the absence of oxygen allow longer residence times, which in turn reduces the production of toxic gases. This results in the emission of much cleaner off-gases through the stack.[78]

Several limitations have also been identified in AER thermal technology. The following limitations are most relevant to the treatment of dioxin-contaminated material:

- the system is unable to treat solids and liquids simultaneously;
- the system treats only free-flowing nonagglomerating solids no larger than 0.0059 inch in size, hence shredding and drying are required prior to treatment; and

Figure 2-6--Major Components of the AER Treatment Process

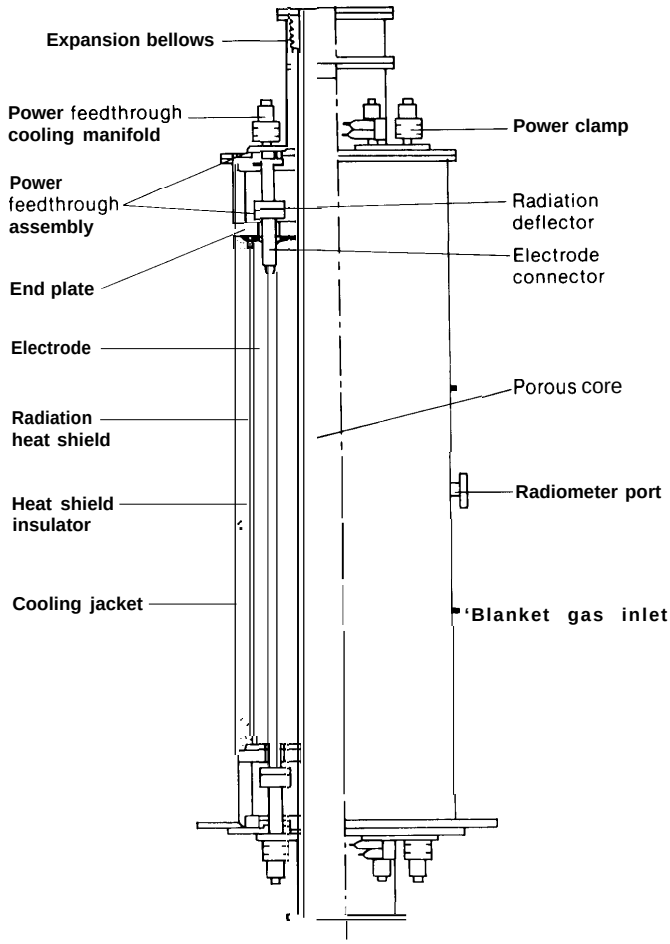

SOURCE: U.S. Environmental Protection Agency, Hazardous Waste Engineering Research Laboratory, *Treatment Technologies for Dioxin-Containing Wastes,* EPA/600/2-86/096 (Cincinnati, OH: October 1986).

[75]H.M. Freeman, U.S. Environmental Protection Agency, Hazardous Waste Engineering Research Laboratory, "Update on New Alternative Hazardous Waste Treatment Processes," pp. 8-9. Paper prepared for presentation at conference on Performance and Costs of Alternatives to Land Disposal of Hazardous Waste of the Air Pollution Control Association New Orleans, LA, Dec. 8-12, 1986; H.M. Freeman and R.A. Olexsey, "AReview of Treatment Alternatives for Dioxin Wastes,' *Journal of the Air Pollution Control Association,* vol. 36, No. 1, January 1986, p. 70.

[76]U.S. Environmental protection Agency, op. cit., footnote 1, pp. 4.52-4.55.

[77]Gas flow rates in AER technology differ from those of rotary kiln incinerators by an order of magnitude (350 cubic feet per minute compared to 10,000 cubic feet per minute).

[78]Jim Boyd, J.M. Huber Corp., personal communication, July 16, 1991; H.M. Freeman, op. cit., footnote 75, pp. 8-10; Freeman, "Innovative Thermal Processes for the Destruction of Hazardous Wastes," *Pollution Equipment News,* April 1988, pp. 108-109; U.S. Environmental Protection Agency, op. cit., footnote 1, p. 4.55.

- the system lacks supplementary fuel sources making it less competitive with conventional incineration techniques (e.g., rotary kilns) for treating waste with high-Btu content.[79]

Cost Estimates for AER Incineration

Treatment costs for AER incineration depend on several factors, including quantity and characteristics of the materials to be incinerated.[80] Although never proven, typical costs for a 100,000-ton cleanup have been said to range from $365 to $565 per ton. J.M. Huber has not used this technology since 1987, opting to invest in other treatment processes with greater market potential. One company official points out that a national research and development program with a focus on dioxin treatment would help to further test and develop this promising technology.[81]

INFRARED INCINERATION

Another technology with dioxin treatment potential but with no current commercial use in the United States is infrared incineration. An infrared incineration mobile pilot unit was developed in 1985 by Shirco Infrared Systems, Inc., Dallas, Texas. It consists of a waste feed system, two combustion chambers (primary and secondary) made of carbon steel, a venturi scrubber system, a blower and heat control system, and a monitoring and pollution control system. The entire unit could be transported in a 45-foot trailer and set up in a few hours for the treatment of PCBs, pesticides, dioxins, and furans.[82]

The primary chamber contains electrically heated silicon carbide elements for radiating incoming waste.[83] Depending on chemicals present in the waste, the elements can be heated to 1,850 °C for 10 minutes to 3 hours. After infrared radiation treatment in the primary combustion chamber has been completed, the partially combusted particulate and exhaust gases are passed into the secondary chamber for complete combustion.[84] The combusted material or ash is then conveyed to the end of the furnace where, after passage through a chute, it is deposited in an enclosed hopper.[85]

Combustion in the secondary chamber is accomplished by using electrical elements in combination with a propane burner; air from the blower system helps maintain the turbulence necessary for complete combustion. Exhaust gases from the secondary chamber are released into the atmosphere after being passed through the wet scrubber for particle removal and cooling.[86]

Testing and Availability of Infrared Incineration Technology

2,3,7,8-TCDD-contaminated (156 to 227 ppb) soil from Times Beach, Missouri was collected and treated by the Shirco pilot-scale technology during a 2-day experimental test in June 1985. Results showed that the Shirco system was successful in treating dioxin, with DRE values exceeding 99.999996 percent. Relatively insignificant levels of dioxin were found in the off-gas. The DRE for gases was calculated and found to exceed 99.999989 percent.[87]

Larger Shirco units have been tested by EPA at several contaminated sites with varying degree of success. Tests of a full-scale unit at the Peak Oil site, Florida and a pilot-scale unit at Township-Demode Road, Michigan, for example, yielded positive results. However, the full-scale unit tested under EPA's Superfund Innovative Technology Evaluation (SITE) Program, has not produced comparable results.

Although infrared incineration has also been employed in remediation of the Florida Steel Corp. Superfund site, Florida and the LaSalle Electric Superfund site, Illinois, much of the success associ-

---

[79]U.S. Environmental Protection Agency, op. cit., footnote 1, P. 4.55.

[80]Typical energy requirement for treating normal soil is 800 to 1,000 kilowatt-hours per ton.

[81]Jim Boyd, J.M. Huber Corp., Texas, personal communication, Jan. 25, 1991.

[82]Fuhr and des Rosiers, op. cit., footnote 9, p. 32; U.S. Environmental Protection Agency, op. cit., footnote 1, p. 4-61; Freeman, Op. cit., footnote 75, pp. 6-7.

[83]The external dimensions of the primary chamber are 2.5 feet wide, 9 feet tall, and 7 feet deep; with a weight of approximately 3,000 pounds.

[84]The much lighter secondary chamber (1,500 pounds) is 3 feet wide, 9 feet tall, and 3 feet deep.

[85]U.S. Environmental Protection Agency, op. cit., footnote 1, p. 4.61; Us. Environmental Protection Agency, op. cit., footnote 57, p. 84.

[86]U.S. Environmental Protection Agency, op. cit., fOOtnote 1, pp. 4.61-4.62.

[87]des Rosiers, op. cit., footnote 25, p. 46; U.S. Environmental Protection Agency, op. cit., footnote 1, pp. 4.62-4.64; and Freeman and Olexsey, op. cit., footnote 75, pp. 70-71.

Figure 2-7—Infrared Incineration Process Offered by Westinghouse Environmental Services, Pittsburgh, PA

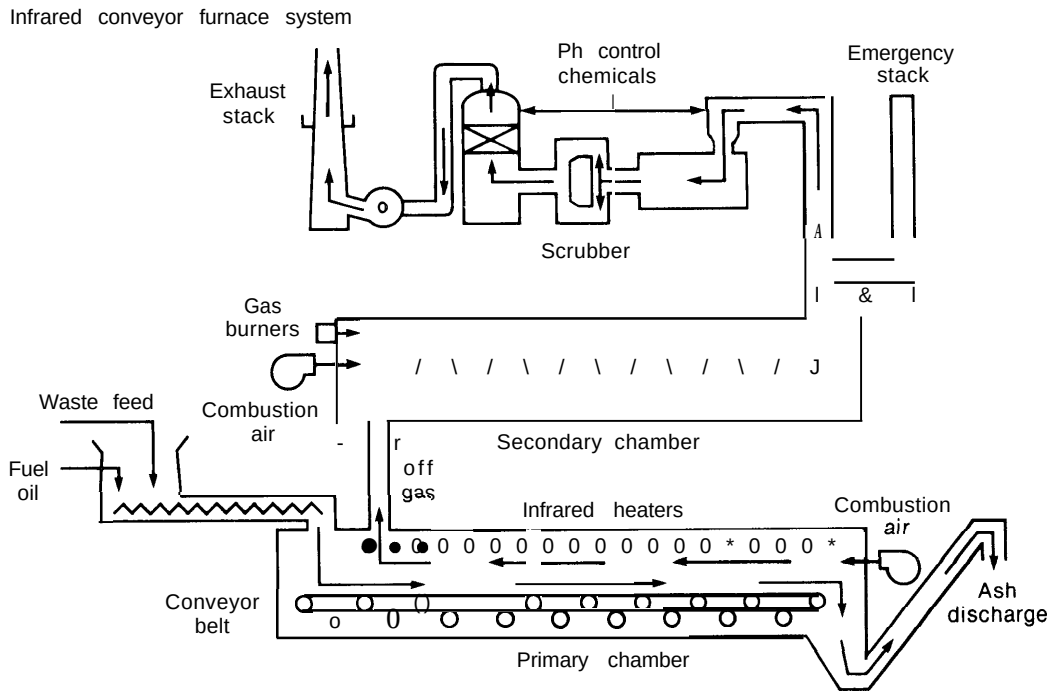

SOURCE: Westinghouse Environmental Services, 'Thermal Destruction—Infrared Conveyor Furnace System," undated.

ated with infrared technology has been achieved in Europe.[88] In Hamburg, for example, DEKONTA, a C.H. Boehringer-Ingelheim subsidiary, has completely redesigned the basic unit to the point where it no longer employs the Shirco process.[89]

To date, Shirco Infrared Systems, now known as ECOVA,[90] has built three small pilot units capable of treating 20 to 100 pounds of waste per hour. Each unit can be housed in a 42-foot-long trailer truck for shipment to treatment sites. The Westinghouse Environmental Services Division in Pittsburgh currently offers a full-scale system (shown in figure 2-7) that uses the Shirco process. Westinghouse claims that this unit is able to treat 100 to 175 tons per day.[91]

Cost Estimates for Infrared Incineration Technology

Information on treatment costs for infrared incineration is limited. However, preliminary estimates by EPA indicate that operation and maintenance of the Shirco technology could cost at least $200 per ton of treated waste.[92]

PLASMA ARC PYROLYSIS INCINERATION

Plasma arc pyrolysis (PAP) is a technology currently in the R&D stage, with features that could make it a candidate for dioxin treatment in the future. In PAP, the chemical substances that make up the waste are dissociated into their atomic elements by

[88]U.S. Environmental Protection Agency, op. cit., footnote 57, p. 85; Fuhr and des Rosiers, op. cit., footnote 9, p. 32; Paul E. des Rosiers, Chairman, Dioxin Disposal Advisory Group, U.S. EPA, personal communication, Dec. 6, 1990.

[89]des Rosiers, op. cit., footnote 30.

[90]ECOVA of Richland, WA purchased Shirco Infrared Systems in the late 1980s. An ECOVA subsidiary in Dallas, TX is currently responsible fOr commercializing the Shirco system.

[91]C. Keith Paulson, Technology, Regulations and Compliance, Westinghouse Environmental Systems and Services Division, Pittsburgh, PA, personal communication, Feb. 11, 1991.

[92]Ibid. U.S. Environmental Protection Agency, op. cit., footnote 1, p. 4.64.

passage through a thermal plasma field. The thermal plasma field is created by directing an electric current through a low-pressure air stream; plasma fields can reach 5 to 15,000 'C. This system can process nearly 10 pounds per minute of solid or 55 gallons per hour of liquid waste.[93]

The central component of the PAP system is a cylindrical pyrolysis reactor or chamber, which consists of a plasma device, a wet scrubber, a flare stack, a process monitoring system, and a laboratory. These components, plus transformers and switching equipment, can be mounted on a 45-foot-long tractor-trailer bed.

Immediately after waste has been injected or atomized into the plasma device of the pyrolysis chamber, the resulting elements are passed to the second portion of the chamber and allowed to recombine to form hydrogen, carbon monoxide, and hydrochloric acid. The typical residence time in the second portion of the pyrolysis chamber (' 'recombinant zone' is about 1 second, and temperatures are between 900 and 1,200 'C.

Recombined gases are then passed through a wet caustic scrubber for removal of particulate matter and hydrochloric acid. The remaining gases, 'a high percent of which are combustible, are drawn by an induction fan to the flare stack where they are electrically ignited. '[94] Although no supporting data were submitted to OTA, Westinghouse claims that because hydrogen, carbon monoxide, and nitrogen are produced, the gas 'burns with a clean flame after being ignited," which indicates that most toxic constituents have been destroyed.[95]

Some of the theoretical advantages of PAP technology relevant to dioxin treatment include:

- the ease of transport from one site to another;
- the ability to incinerate chlorinated liquid wastes, such as those found at the Love Canal and Hyde Park Superfund sites;[96] and
- the ability to use organic effluents as fuel to run a generator.[97]

The most significant limitation of PAP treatment is that only liquids can be treated. Contaminated soil and viscous sludge thicker than 30- to 40-weight motor oil cannot be processed by the system.[98]

Testing and Availability of PAP Incineration Technology

Westinghouse is currently developing PAP incineration technology (see figure 2-8) but has not specifically tested the system with dioxins. Nonetheless, tests in which PCBs containing dioxins, furans, and other chlorinated pollutants were treated in a bench-scale PAP unit showed dioxin levels in scrubber water and stack gases in the part-per-trillion range. DREs in the test ranged from six to eight nines .99

SUPERCRITICAL WATER OXIDATION

A technology receiving recent R&D effort, with some promise for dioxin treatment, is supercritical water oxidation (SCWO). A system developed by MODAR, lnc., Natick, Massachusetts, is based on the oxidizing effect of water on organic and inorganic substances at 350 to 450 'C and more than 218 atmospheres (pressure)-or a supercritical state. Under supercritical conditions, the behavior of water changes, and organic compounds become extremely soluble whereas inorganic salts become "sparingly' soluble and tend to precipitate.[100]

---

[93]Westinghouse Environmental Services, ''Thermal Destruction—Pyroplasma,'' July 1988, p. 2.

[94]U.S. Environmental Protection Agency, op. cit., footnote 1, p. 4-67.

[95]Ibid.; Westinghouse Environmental Services, op. Cit., footnote 93.

[96]Ibid.

[97]U.S. Environment Protection Agency, op. cit., footnote 1, pp. 4.68,4.72.

[98]Ibid., p. 4.67.

[99]U.S. Environmental Protection Agency, op. cit., footnote 1, pp. 4.68-4.71; des Rosiers, op. cit., footnote 25, p. 48; Fuhr and des Rosiers, op. cit., footnote 9, p. 37; Nicholas P. Kolak et al., "Trial Burns-Plasma Arc Technology,'' paper presented at the U.S. EPA Twelfth Annual Research Symposium on Land Disposal, Remedial Action, Incineration and Treatment of Hazardous Waste, Cincinnati, OH, Apr. 21-23, 1986; Freeman and Olexsey, op. cit., footnote 75, pp. 4-5.

[100]U.S. Environment Protection Agency, op. cit., footnote 1, pp. 4.80-4.82; Terry B. Thomason et al., "The MODAR Supercritical Water Oxidation Process," paper submitted for publication to *Innovative Hazardous Waste Treatment Technology Series*, Nov. 3, 1988, p. 3. This paper was found in MODAR, Inc., *MODAR Information, an* undated company report; K.C. Swallow et al., "Behavior of Metal Compounds in the Supercritical Water Oxidation Process," paper presented at the 20th Intersociety Conference on Environmental Systems of the Engineering Society for Advancing Mobility, Land, Sea, Air, and Space; Williamsburg, VA, July 9-12, 1990; Freeman and Olexsey, op. cit., footnote 75, pp. 7-8.

Figure 2-8—Westinghouse Environmental Services' Pyroplasma Waste Destruction Unit

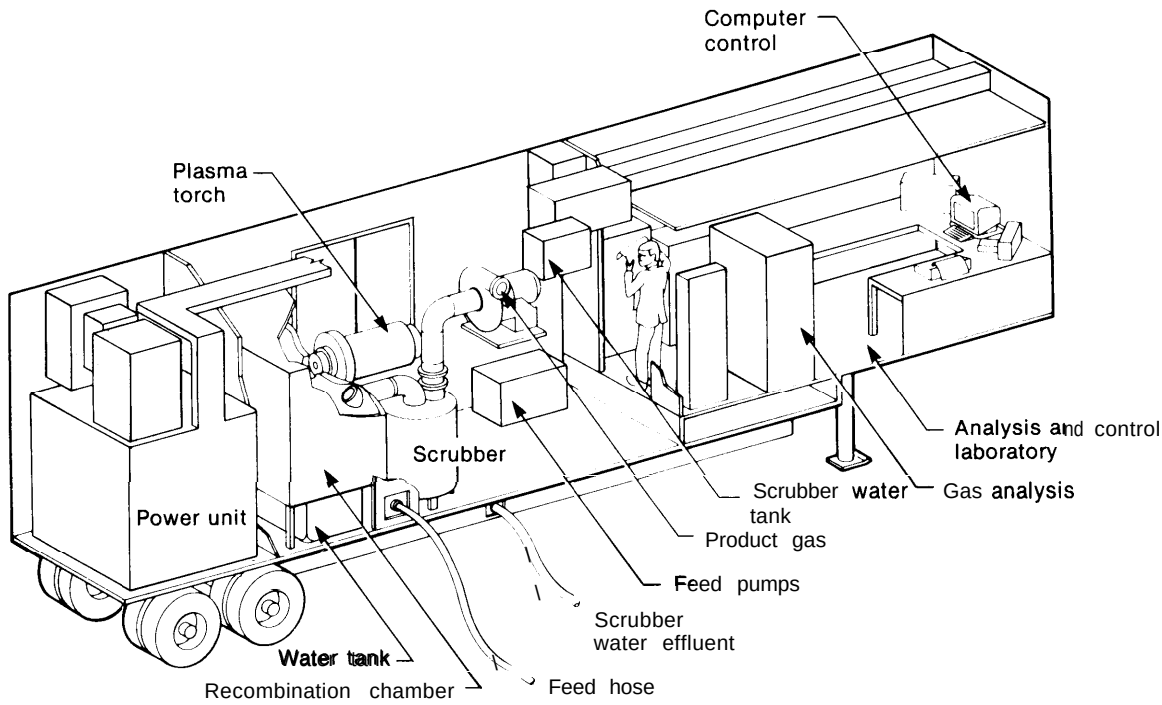

SOURCE: Westinghouse Environmental Services, 'Thermal DestructionPyroplasma," July 1988.

The process is designed to convert the intricate arrangements of carbon and hydrogen that make up organic compounds into their most basic forms, carbon dioxide and water. Treatment of contaminated liquid waste results in two effluents-a solid composed primarily of precipitated salts containing metals and elements such as chlorine, and a liquid consisting of purified water.[101] The typical low temperature found during SCWO treatment helps prevent the formation of the primary pollutants sulfur dioxide and nitrogen oxides.102 Figure 2-9 represents a flow diagram of this technology.

Although SCWO can treat contaminated materials with up to 100 percent organic content, most R&D has focused on aqueous waste containing 20 percent organics or less. In this range, SCWO technology is said to be highly competitive and cost-effective with other available alternative treatment technologies.[103] **SCWO can be** used to treat organic solids; slurries and sludge may also be treated with the addition of high-pressure pumping systems. The evaluation of SCWO on dioxin-contaminated soil, although successful, has been limited to bench-scale tests.[104]

MODAR's SCWO process involves pumping contaminated materials into a highly pressurized reactor vessel; liquid oxygen and air are also pumped alternatively into the reactor vessel. The optimum heat content of the mixture (1,800 Btu per pound) is maintained either by adding water to reduce the heat content or by adding organic materials or fuels, such as natural gas or fuel oil, to increase it. Caustic may also be added to the supercritical reactor to neutralize the acid produced when organic and inorganic contaminants in the soil or waste are oxidized. Normally, part of the effluent is recycled by mixture with the waste stream being fed into the reactor to maintain proper operating temperatures, as well as rapid and effective destruc-

[101]U.S. Environmental Protection Agency, op. cit., footnote 1, p. 4-82.

[102]Thomason et al., op. cit., footnote 100, p. 4.

[103]Ibid., p. 5.

[104]Ibid., pp. 4,5; Ralph Morgan, MODAR, Inc., personal communication, Mar. 28, 1991.

Figure 2-9—Supercritical Water Oxidation Treatment

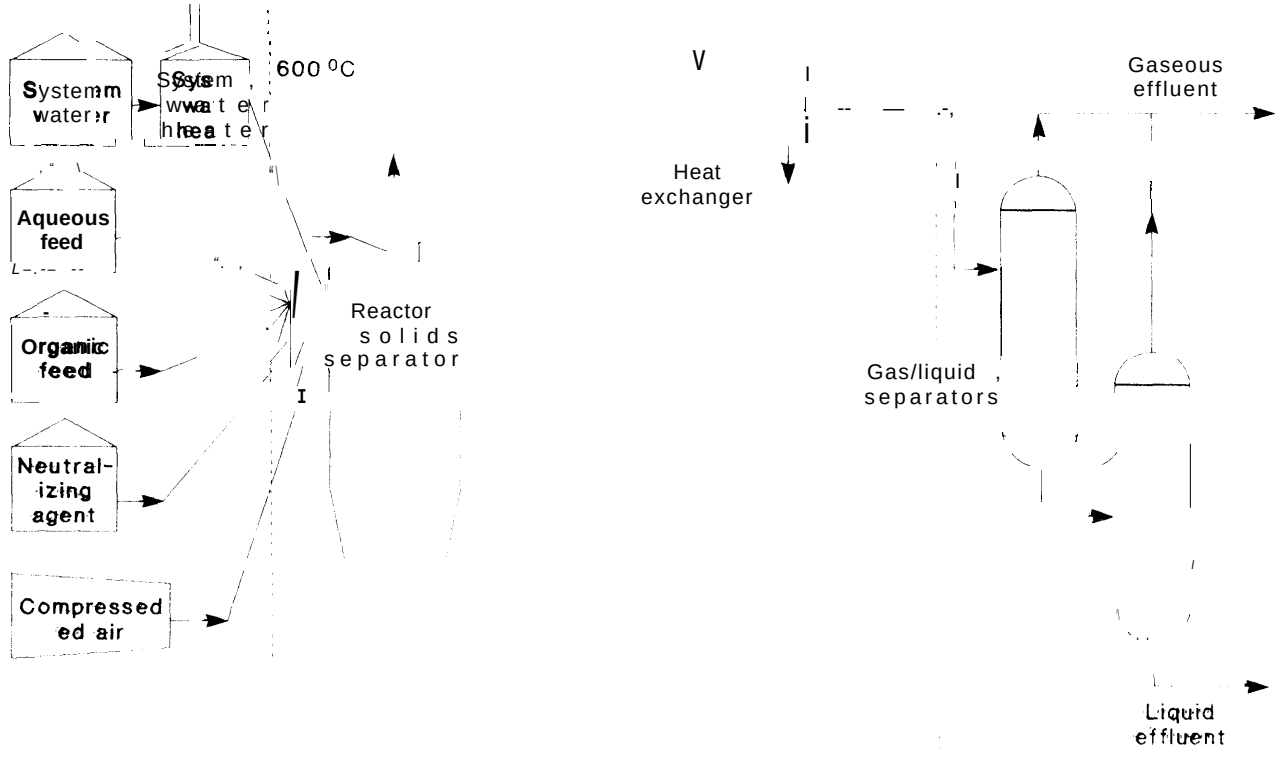

Feeds are pumped to 23 MPa* operating pressure. System water is heated to 600°C. Compressed air is sent to the reactor with materials to be treated.

*MPa = megapascal

Organics are oxidized to carbon dioxide (CO_2) and water. Inorganic solids and salts from **neutralized acids are precipated in** the reactor Remaining liquids exit through the top of the reactor into the heat exchanger unit

Fluid from reactor **is** cooled to ambient temperature, and forms a two-phase system

Two phases are separated in gas/liquid separator. Gaseous effluents are **combined** for **sampling.** Liquid effluents are sampled and collected.

SOURCE: K.C. Swallow et al., "Behavior of Metal Compounds in the Supercritical Water Oxidation Process " paper presented at the 20th Intersociety conference on Environmental Systems of the Engineering Society for Advancing Mobility, Land, Sea. Air, and Space; Williamsburg, VA, July 9-12, 1990.

tion of pollutants; heat from the effluent can also be used to generate power for running pumps, compressing oxygen, and other uses,[105] According to claims in an undated MODAR report,[106] the SCWO technology has "sufficient instrumentation for operation and automatic control by a distributed computer control system" that includes process monitoring and *control, automated start-up/shutdown* procedures, and emergency shutoff and response systems.

During SCWO treatment, organic compounds are oxidized rapidly into their most basic chemical components; inorganic chemicals (salts, halogens, metals) become insoluble in the supercritical envi-

[105]Thomason et al., op. cit., footnote 100, pp. 6-7; Carl N. Staszak et al., MODAR, Inc., "The Pilot-Scale Demostration of the MODAR Oxidation Process for the Destruction of Hazardous organic **Waste Materials,** " *Environmental Progress, vol. 6, No. 1, February* 1987, p. 40; and Michael Lawson and Kenneth Brooks, "New Technology Tackles Dilute Waste:, " *Chemical Week*, Oct 1 1986, p. **40.**

[106]**"The MODAR Oxidation Process.** Process Flow Diagram Representative Mass and Energy Balance System Economics," MODAR, Inc., Nov. 15, 1988. This **paper** was found in MOD. AR, Inc., *MODAR Information*, **an** undated company report,

ronment and descend to the bottom of the reactor where they are removed as salt or cool brine; and hot aqueous and gaseous reaction products are recycled or released to the atmosphere after cooling.[107] Although brine may be disposed of in a deep well, salts-especially if they contain heavy metals—must be disposed of in a secure landfill after proper solidification.[108] The discharged effluents consist of clean water and off-gases (carbon dioxide, oxygen, nitrogen).[109]

The advantages of SCWO technology (if developed as proposed) most relevant to dioxin treatment include the following:

- the reduction of contaminants to their most basic chemical form and the harmless effluents produced eliminate the need to dispose of treated effluents;
- compounds that are difficult to dispose of are reduced to their most basic, nonhazardous forms in a process that can be adapted to a wide range of waste streams or scale of operations;[110]
- all chemical reactions occur in a totally enclosed and self-scrubbing system, thus allowing complete physical control of the waste and facilitating the monitoring of reactions throughout the process; and
- MODAR's SCWO technique can also be applied to condensates produced from the use of soil washing technologies.

The firm marketing this technology claims that it can be cost-effective when compared to incineration, particularly in treating waste with an organic content of less than 20 percent.[111]

SCWO systems are limited by their ability to treat dioxin-contamin ated waste in liquid form. Often, organic waste must be diluted with benzene[112] prior to treatment (to at least 20 percent by weight). Use of the MODAR system for treating waste with higher heat content is not cost-effective.[113] Because SCWO's particle size limitation is 200 microns, it has been suggested that one way to remediate contaminated sites such as Times Beach may be by grinding and pulverizing the soil to make a slurry that can then be oxidized.[114] This practice, however, is yet to be demonstrated and, if proved feasible, may be prohibitively high in cost.

Testing and Availability of SCWO Technology

Since 1984 when SCWO was permitted by EPA as a research treatment facility, the MODAR process has been tested at various locations and on different scales to destroy waste contaminated with substances, such as chlorinated organics and dioxins.[115] Laboratory analysis of the effluents after testing showed no detectable dioxin in the residues.[116] Laboratory-scale tests using waste feed containing a mixture of synthetic dioxin and trichlorobenzene (about 100-ppm concentration) demonstrate a DRE for dioxin in liquid organic waste exceeding the EPA standard of 99.9999 percent. On this occasion, lab tests showed that 110 ppb of 2,3,7,8 -TCDD present in waste was reduced to less than 0.23 ppb.[117]

Bench-scale tests have been conducted on different organic chemicals, including chlorinated solvents, PCBs, and pesticides. Efforts to detect dioxins in treated effluents have been unsuccessful. Similar results were obtained in field demonstrations conducted by MODAR in New York and Pennsylvania. In one test, for example, SCWO treatment of dioxin-contaminated methyl ethyl ketone achieved

---

[107] Thomason et al., op. cit., footnote 100, Pp.6-7.

[108] MODAR, Inc., op. cit., footnote 106.

[109] Thomason et al., op. cit., footnote 100, Pp. 6-7, 10.

[110] Ibid., pp. 8-10; Terry B. Thomason and Michael Modell, "Supercritical Water Destruction of Aqueous Wastes," *Hazardous Waste, vol. 1, No. 4, 1984, p. 465.*

[111] Brian G. Evans, Development Manager, ABB Lummus Crest, Inc., personal communication, Apr. 2, 1991.

[112] A known cancer-causing solvent.

[113] U.S. Environment@ Protection Agency, op. cit., footnote 1, pp. 4.80-4.82.

[114] Evans, op. cit., footnote 111.

[115] ABB Lummus Crest, "The MODAR Technology: Supercritical Water Oxidation Process," a technical profile, undated; Thomason et al., op. cit., footnote 100, pp. 14-15.

[116] U.S. Environmental Protection Agency, op. cit., footnote 1, p. 4.83.

[117] Fuhr and des Rosiers, op. cit., footnote 9, p.34.

DREs ranging from 99.99994 to 99.999991 percent.[118] MODAR has tested its SCWO process on more than 50 different types of organic waste.[119]

Bench-scale studies of the MODAR technology have also shown that when treated, organic pollutants (e.g., PCBs and dioxins) are oxidized completely to carbon dioxide, water, nitrogen, and inorganic salts with DREs of 99.9999 percent or higher. After oxidation under supercritical conditions, the chlorine present in PCB and dioxin. molecules is converted to inorganic chloride.[120]

Plans for commercialization of this technology began in 1989 as a joint venture between MODAR, Inc. (Natick, Massachusetts), and ABB Lummus Crest, Inc. (Houston, Texas). To date, ABB Lummus Crest, the only worldwide SCWO licenser, offers two engineering packages for small (5,000 gallons per day) and medium-sized (20,000 gallons per day) plants. R&D work is underway with the U.S. Department of Energy at the Savannah River site to treat radioactive organic waste.[121] The National Aeronautics and Space Administration has also shown considerable interest in SCWO because of its ability to treat human waste and recycle water simultaneously. 122

Cost Estimates for SCWO Treatment

No experience with full-scale operation of this technology is available, and the only cost estimates have been made by private firms marketing these systems. According to ABB Lummus Crest, Inc., costs for dioxin treatment are expected to be higher than liquid incineration but significantly lower than those for rotary kiln incineration--this, however, has yet to be demonstrated. Expenses incurred from permitting and other factors would increase these costs.[123]

IN SITU VITRIFICATION

In situ vitrification (ISV) is a technology developed to thermally treat waste in place and to solidify all material not volatilized or destroyed. It may have application to special types of dioxin contamination if current developments can be successfully tested. ISV was developed in 1980 by Pacific Northwest Laboratories (PNL), a division of Battelle Memorial Institute, under the primary sponsorship of the U.S. Department of Energy (DOE). PNL has also received financial support for vitrification research from the U.S. Environmental Protection Agency and the Electric Power Research Institute. Battelle holds exclusive rights for the application of this technology at DOE sites, whereas the Geosafe Corp., sublicensed by Battelle, is responsible for carrying out the development and application of ISV in the private sector.[124]

Vitrification involves placing four electrodes at specified depths and distances on the surface of the contaminated soil to be treated. Space between the electrodes is covered with a layer of graphite and glass frit to make up for the typically low conductivity of soil. Soil treatment areas may range from 100 to 900 square feet, with a maximum depth of 30 feet per setting. At this depth, its developers expect ISV to be able to treat 800 to 1,000 tons of contaminated soil at rate of 4 to 6 tons per hour. The electrodes and the layer of conductive materials are covered by an octagon-shaped hood to collect off-gases rising from the melting zone and surrounding soil.[125]

As electricity is applied to the electrodes, current flows through the graphite/glass layer, heating it to 1,000 to 2,000°C. Once the top soil layer has been melted, it becomes electrically conducting and facilitates the transfer of heat and current to deeper

---

[118] Thomason et al., op. cit., footnote 100, pp. 13-14, 15.

[119] Fuhr and des Rosiers, op. cit., footnote 9. p. 34.

[120] Staszak et al., op. cit., footnote 105, p. 42; Terry B. Thomason et al., op. cit., footnote 100, p. 20.

[121] Evans, op. cit., footnote 111.

[122] Glenn T. Hong et al., MODAR, Inc., "Supercritical WaterOxidation: Treatment of Human Waste and System Configuration Tradeoff Study," paper presented at the Space 88 Conference sponsored by the American Society of Civil Engineers, , Albuquerque, NM, Aug. 29-31, 1988.

[123] Evans, op. cit., footnote 111.

[124] Geosafe Corp., "Application and Evaluation Considerations for In Situ Vitrification Technology: A Treatment Process for Destruction and/or Permanent Immobilization of Hazardous Materials," April 1989, pp. 1-2; Geosafe Corp., "Geosafe Corporation Comments on Claims by Larry Penberthy, President of PEI, Inc., Against In Situ Vitrification Technology, Nov. 22, 1990; and James E. Hansen et al., "Status of In Situ Vitrification Technology: A Treatment Process for Destruction and/or Permanent Immobilization," paper presented at the 8th Annual Hazardous Materials Conference, Atlantic City, NJ, June 5-7, 1990.

[125] Geosafe Corp., "Application and Evaluation Considerations for In Situ Vitrification Technology: A Treatment Process for Destruction and/or Permanent Immobilization of Hazardous Materials," op. cit., footnote 124, pp 4,5,6.8

portions of the soil block. The transferred heat and electricity in turn mix or blend different materials and contaminants found in the melting zone.

During melting, solids and contaminants in the soil undergo physical and chemical changes, including:

- thermal decomposition of chlorinated organic pollutants into simpler compounds of carbon, hydrogen, and chlorine;
- breakdown of nitrates into nitrogen and oxygen; and
- thermal decomposition of inorganic soil components into oxides such as silica and alumina.

The latter products are responsible for the crystalline, glasslike appearance that characterizes vitrified soil. [126]

On completion of treatment, electrodes are left in place until the soil cools; once cooled, the electrodes are removed, reused, or recycled. Off-gases escaping the melting zone are trapped within the hood and sent to the gas treatment system, which consists of a quencher, scrubber, dewatering or mist-elimination system, heating system (for temperature and dew point control), and filtration and activated carbon adsorption systems. According to Geosafe officials, only 1 percent of the off-gases treated by the pollution control system originates at the melt itself. [127]

Testing and Availability of ISV Technology

ISV has been tested in the United States and Canada on several different soil types containing heavy metals (lead, cadmium, mercury), liquid organics (dioxin, PCBs, toluene), solid organics (wood, polyvinyl chloride, DDT), and radioactive materials (plutonium, radium, uranium). Although considerable differences were said to exist among tested soils (e.g., permeability, density, water content), the developers claim that they had no adverse effects on the process. [128] The developers, however, caution that when fully saturated soils are being treated, water reduction or extraction should be employed in advance to minimize overall treatment costs, because the removal of 1 pound of water consumes as much energy as the removal of 1 pound of soil.

ISV treatment of soil contaminated with pentachlorophenol (PCP) and PCBs has been subject to concern because of the potential to produce dioxins as well. Dioxins were detected in the off-gas during testing of ISV at the U.S. Navy's PCB-contaminated Superfund site on Guam in 1990. However, no dioxins were detected in most other cases involving pilot testing of ISV on PCB-contaminated soil. [129] In early 1987, a bench-scale ISV test on soil from the Jacksonville, Arkansas Superfund site containing nearly 10 ppb of dioxins, resulted in DRE values of 99.9999 percent; treatment of off-gases would, according to a company report, have resulted in even higher DREs. [130] Figure 2-10 is a flow diagram of the bench-scale unit tested at the Jacksonville, Arkansas site.

Support by DOE and its contractors have been essential for the development and application of ISV, particularly at the nuclear weapons complex. *31 Following the work by DOE, ISV was selected under EPA's Superfund Innovative Technology Evaluation (SITE) program. EPA has since sup-

---

[126] Geosafe Corp., "Theoretical Basis of process Operation for Volatile Components-Appendix B," *Pilot Test Report for Application of In Situ Vitrification Technology to Soils and Ash Contaminated With Dioxin, PCBs, and Heavy Metals at the Franklin Burns Site #1,* vol. 2. GSC 1005, Geosafe Corp., Kirkland, WA, June 27, 1990, p. 8; Geosafe Corp. "Apphctttlon and Evaluation Consideration for In Situ Vitrification Technology: A Treatment Process for Destruction and/or Permanent Immobilization of Hazardous Materials, " op. cit., footnote 124, p. 12; and Fuhr and des Rosiers, op. cit., footnote 9, p. 17.

[127] Geosafe Corp., "Application and Evaluation Considerations for In Situ Vitrification Technology: A Treatment Process for Destruction and/or Permanent Immobilization of Hazardous Materials," op. cit., footnote 124, pp 2-3, 5.

[128] Ibid., pp. 13-15.

[129] Geosafe Corp., "Geosafe Corporation Comments on Claims by Larry Penberthy, President of PEI, Inc., Against In Situ Vitrification Technology," Nov. 22, 1990; James E. Hansen et al., op. cit., footnote 124; Naval Civil Engineering Laboratory, Engineering Evaluation/Cost Analysis (EE/CA) for the Removal and Treatment of PCB-Contaminated Soils at Building 3009 Site, Naval Civil Engineering Laboratory, Port Hueneme, CA, July 3, 1990, p. 9.

[130] S.J. Mitchell, Battelle Pacific Northwest Laboratories, Richland, WA, "In Situ Vitrification for Dioxin-Contaminated Soils," report prepared for American Fuel & Power Corp., Panama City, FL, April 1987, pp 2, 18

[131] For information regarding the status of ISV at DOE weapons Sites, see office of Technology Assessment, *Long-Lived* Legacy: *Managing High-Level and Transuranic Waste at the DOE Nuclear Weapons Complex---Background Paper, OTA-BP-O-83* (Washington, DC: U.S. Government Printing Office, May 1991).

Figure 2-10—Bench-Scale ISV Unit Tested With Dioxin-Contaminated Soil From the Jacksonville, AR Superfund Site in February 1987

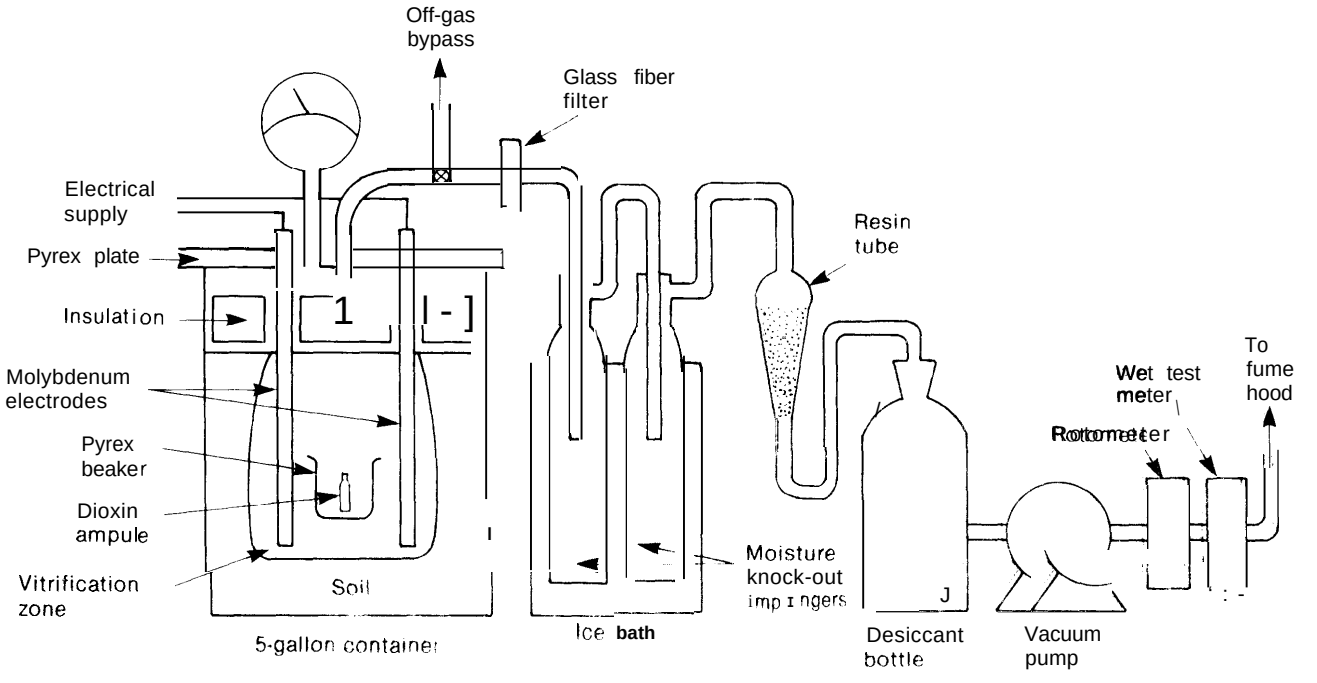

SOURCE: S.J. Mitchell, Battelle Pacific Northwest Laboratories, Richland, WA, "In Situ Vitrification for Dioxin-Contaminated Soils," report prepared for American Fuel & Power Corp., Panama City, FL, April 1987

ported the testing of this technology at highly contaminated sites.

Thus far, in-situ vitrification has been developed on four different scales: bench (5 to 10 pounds), engineering (50 to 150 pounds), pilot (10 to 50 tons), and large (500 to 1,000 tons). Current plans call for additional tests to gather- the data needed to understand the behavior of large-scale systems in deeper soil, particularly because ISV has not been very successful at depths of more than 16 feet.

According to reports of most bench-scale tests performed, ISV technology has exceeded EPA's efficiency requirement for the destruction and removal of dioxins from soil (9.9999 percent).[132] Additional research, however, is still needed particularly on pilot- and large-scale levels, to demonstrate the effectiveness of ISV.

Cost Estimate for ISV Technology

Cost data for ISV treatment of soil contaminated with dioxins do not exist at this time. Like most innovative technologies discussed in this paper, ISV costs would depend heavily on site-specific factors such as the amount of site preparation required; the properties of the soil to be treated, including volume and the amount of glass-forming material present; treatment depth (the deeper, the less costly because more soil can be treated); moisture content; unit price of electricity: and season of year.[133]

[132]Geosafe Corp., "Application and Evaluation Considerations for In Situ Vitrification Technology ,4 Treatment Process for Destruction and/or Permanent Immobilization of Hazardous Materials, " op cit., footnote 124, pp 12, 32

[133]Ibid., pp. 13, 28-29.

DECHLORINATION TECHNOLOGIES

The ultimate objective of all dechlorination methods is to destroy or detoxify hazardous chlorinated molecules through gradual, but progressive replacement of chlorine by other atoms (particularly hydrogen). The study and application of dechlorination dates back more than 70 years when it was first used in the commercial production of phenols. For the most part, chemical companies focused their efforts on searching for new reagents as well as for ways to reduce their dependence on dechlorination processes requiring high temperature and pressure. Only in the past decade did researchers begin to look at the potential applications of dechlorination technology to dioxin treatment.[1] One of the first U.S. Environmental Protection Agency (EPA) reports on the potential application of reagents for the destruction of polychlorinated biphenyls (PCBs) in soils was presented in 1983.[2]

Dechlorination processes are now designed to use glycols, alcohols, or water as their primary reagents. The degree of success of glycol- or alcohol-based methods in removing chlorinated compounds (e.g., PCBs, dioxins, and furans) from contaminated material at any given site varies among methods and among sites. The conditions that most commonly determine the efficacy of dechlorination methods employing glycols or alcohols (e.g., on contaminated soil) include:

- the organic carbon content of the soil,
- the size distribution of soil particles,
- the chemical forms (or isomers) of chlorinated compounds present in the soil,
- the soil moisture content,
- the temperature of the chemical reaction,
- the type of reagent formulation used, and
- the length of time during which contaminated soil is exposed to the reagents.

These factors, as well as the cleanup level required, also greatly affect total remediation costs.[3]

Unlike glycol- or alcohol-based methods, the water-based dechlorination treatment researched by EPA, called base-catalyzed decomposition (BCD), is not affected by the same factors. As an example, water is used in the BCD process to distribute reagents throughout the soil. This unique feature allows as little as 1 to 5 percent (wet weight) of reagent to be used to treat soil and eliminates the need to recover reagents for reuse.[4]

Early Dechlorination Methods

Early dechlorination techniques were used primarily for the destruction of PCBs and PCB-contaminated materials such as certain oily wastes. As a consequence, relatively little information exists on their potential to detoxify dioxins. The most relevant dechlorination processes in this group are those of the Goodyear Tire & Rubber Co., Acurex Corp., and Sun Ohio.

The Goodyear technique was designed primarily to dissociate PCB molecules from transformer fluids by using sodium naphthalene and sodium tetrahydrofuran. Although PCB concentrations up to 500 parts per million (ppm) could be reduced to 10 ppm in 1 hour of treatment, this practice was abandoned because of the presence of the primary pollutant naphthalene in treated residues. The effectiveness of the Goodyear system on dioxins is unknown.[5]

---

[1]Kimberly A. Roy, "When Chemistry Is Right . . . A Fine-Tuned Dechlorination Process Destroys Dioxins, PCBs," *Hazmat World,* September 1990, p. 36; Robert L. Peterson and Stephen L. New, Galson Remediation Corp., "APEG-PLUS: Dechlorination of Dioxins, PCBs, and Pentachlorophenol in Soils and Sludges," undated paper, p. 1.

[2]C.J. Rogers, "Chemical Treatment of PCBs in the Environment" paper presented at the Eighth Annual Research Symposium, Cincinnati, OH, September 1983 (EPA-600/9-83-003), pp. 197-201.

[3]Paul E. des Rosiers, "Chemical Detoxification of Dioxin-Contaminated Wastes Using Potassium Polyethylene Glycolate," *Chemosphere, vol. 18, No. 1-6, 1989,* p. 351; and U.S. Environmental Protection Agency, Hazardous Waste Engineering Laboratory, ***Treatment Technologies for Dioxin-Containing Wastes,*** EPA/600/2-86/096 *(Cincinnati,* OH: October 1986), p. 5.12.

[4]Charles J. Rogers, Risk Reduction Engineering Laboratory, U.S. Environmental Protection Agency, Cincinnati, OH, personal communication June 13, 1991.

[5]U.S. Environmental protection Agency, op. cit., footnote 3, pp. 5.2-5.3, 5.5.

The Acurex (Chemical Waste Management) technique involves mixing filtered PCB-contaminated oil with a sodium-based reagent in an inert nitrogen atmosphere to produce: 1) oil with no detectable PCBs, and 2) sodium hydroxide (NaOH) solution. This system, which is commercially available, is known to reduce dioxin levels in PCB 1 liquids ranging from 1,000 to 10,000 ppm to !ess than 1 ppm.[6]

Known as the PCBX process, the Sun Ohio (now ENSR, Canton, Ohio) process is a mobile, closed-loop system in which dewatered PCB-contaminated mineral/bulk oils are mixed with a reagent. After filtration, the end products include clean oil, PCBS, and salt residues that are solidified in a Toxic Substances Control Act (TSCA) PCB-permitted landfill. This process has been effective in reducing PCBs only in oils. Two to three passes through the closed-loop system are sufficient to reduce PCB concentrations from 3,500 to approximately 2 ppm. Treatment costs for the Sun Ohio PCBX process are estimated to be in the range of $3 per gallon of bulk oil[7]

Today, the methods developed by Acurex, Goodyear, and Sun Ohio are commercially available, but the reactivity of these primarily sodium-formulated reagents with water hampers their use on dioxin-contaminated soil, sediment, sludge, and dredging.[8] Although these dechlorination methods are marketed for a variety of uses, treatment of dioxin-contaminated soil is not one of them.

Recent Dechlorination Methods

Alkaline Polyethylene GIycolate (APEG or KPEG)[9]

In 1978, Franklin Research Institute began an attempt to identify a chemical reagent that would break down carbon-halogen bonds in the PCB molecule. Of the dehalogenation formulations tested, the most successful was composed of 60 grams of molten sodium and 1 liter of polyethylene glycol (PEG) with a molecular weight of about400.'[10][11] The effect of the PEG-based formulation on dioxin-contaminated soil was also studied by the EPA Risk Reduction Engineering Laboratory (RREL), Cincinnati, Ohio, and Wright State University, "Dayton, Ohio, in 1982.

Testing and Availability of APEG Treatment— In ***1985,*** under the auspices of EPA, the Galson Remediation Corp. (East Syracuse, New York) tested and compared two dechlorination reagent[12] on soil and slurry containing a dioxin isomer[13] at concentrations as high as 2,000 parts per billion (ppb). At the conclusion of the study, the PEG-based formulation (known as APEG) was found to reduce the dioxin level to less than 1 ppb in about 12 hours. Later that same year, EPA tested the APEG process on dioxin-contaminated soil at the Shenandoah Stables, Moscow Mills, Missouri, and learned that the moisture content of the soil tested (18 to 21 percent water) significantly reduced APEG's effectiveness.[14] In light of these results, in 1986 EPA concluded that although APEG was highly efficient under laboratory conditions, more work was required in the field.[15]

[6]Ibid., p. 5.5.

[7]Ibid., pp. s.3, 5.5, 5.12.

[8]Alfred Kornel, Charles J. Rogers, and Harold L. Sparks, "KPEG Application From the Laboratory to Guam, " in U.S. Environmental Protection Agency, Risk Reduction Engineering Laboratory, *Third International Conference on New Frontiers of Hazardous Waste Management,* EPA/600/9.89/072 (Cincinnati, OH: August 1989), p. 461.

[9]Throughout this section, APEG and KPEG are used interchangeable> because both processes employ a polyethylene glycol/potassium hydroxide solution to remove chlorine atoms from the dioxin molecule APEG is offered by Galson Remediation Corp., Syracuse, NY (patent covers dimethyl sulfoxide cosolvent/catalyst) and KPEG by remediation companies such as Canonic Environmental, Inc., in Colorado.

[10]A similar process using heavier PEGs (molecular weight between 1,500 and 6,000) in combination with a weak base (potassium carbonate) or an inorganic peroxide (sodium peroxide) "to form a clear solution" has been tested at bench scale in Europe for the destruction of dioxins such as those found at Seveso, Italy. However, this process, although investigated has never been used

[11]U.S. Environmental Protection Agency, Op cit., footnote 3, p 5.4

[12]The reagents tested were potassium hydroxide/polyethy lene glycol 400/dimethyl sulfoxide (KOH/PEG/DMSO), and potassium hydroxide/2-(2-methoxyethoxy)ethanol/dimethyl sulfoxide

[13]1,2,3,4-tetrachlorodibenzo-*p*-dioxin

[14]U.S. Environmental Protection Agency, Op cit., footnote 3, p 5 9

[15]Ibid., p. 5.12.

APEG and KPEG processes are extremely hygroscopic, and exposure to water readily deactivates the PEG-based reagent formulation.[16] EPA, in response to poor results obtained from tests on in situ treatment of soil in U.S. EPA Region II (Glenn Falls, New York; South Buffalo, New York) and Region VII (Moscow Mills, Missouri), has concluded that in situ chemical treatment of soil with APEG is not a viable option.[17]

Costs Estimates for APEG or KPEG Treatment— According to hypothetical scenarios developed by Galson Remediation Corp. and EPA's RREL, the costs incurred from APEG treatment are as follows: For in situ treatment, the cost is nearly $300 per ton of soil treated, with about two-thirds of this resulting from the purchase of reagents; setup and operational activities would be responsible for only about 22 percent of the total.

For slurry or batch treatment, theoretical calculations showed that costs could be about $91 per ton of soil treated. Of this total, 22 percent is for reagent purchase and 59 percent for setup and operation. Compared to in situ treatment, the slurry process was three times less costly due to the ability of the system to recycle the reagents used in treatment.[18]

More recently, actual costs of using dechlorination (KPEG process) have been reported by Canonie Environmental. According to a company official, the cost for treating 1 ton of PCB-contaminated soil at the Wide Beach, New York, site, is about $265. For dioxin-containing soil, costs are expected to range between $250 and $350 per ton.[19]

APEG-PLUS Treatment Process

From 1981 to 1986, Galson Remediation Corp. (GRC) conducted laboratory- and pilot-scale studies on its APEG process. These efforts were later implemented by the construction of a mobile treatment unit by Niagara-Mohawk Power Co. (then under contract with GRC) to provide the first full-scale application of GRC treatment. Until that time, application of the APEG process had been limited primarily to oil contaminated with chlorinated hydrocarbons; the new treatment facility made soil treatment possible.[20] This GRC dechlorination process for treating soil (shown in figure 3-1) is now patented in the United States, Canada, and Europe and is known as APEG-PLUS.[21]

APEG-PLUS detoxifies materials contaminated with dioxins, PCBs, pesticides, and other chlorinated hydrocarbons. The patented APEG-PLUS process consists of potassium hydroxide (KOH) in a mixture of polyethylene glycol and dimethyl sulfoxide (DMSO). According to company officials, the PEG-DMSO mixture is not toxic.[22]

Once the unit has been assembled, excavated soil or sludge is conveyed to a mixer, where it is combined with reagents to form a slurry. When proper mixing has been achieved and chlorinated organic compounds (PCBs, dioxins, furans) are extracted from the soil particles and incorporated into the mixture, the slurry is pumped into the reactor vessel and heated to 150 'C. During the reaction, chlorine atoms attached to the dioxin molecule are replaced by PEG to form a water-soluble substance (glycol ether) that can be degraded easily into nontoxic materials or washed from the soil.[23 24]

After chemical analysis performed in the mobile laboratory unit indicates that the required treatment level has been reached, the slurry is sent to a centrifuge. The spinning motion of the centrifuge separates the reagent from treated soil. The soil is water-washed for decontamination and removed for redisposal on land. The wash water is passed through

---

[16]Ibid., p. 5.9.

[17]Rogers, op. cit., footnote 4.

[18]U.S. Environmental protection Agency, op. cit., footnote 3, Pp. 5.12-5.13.

[19]Alister Montgomery, Canonie Environmental, Inc., personal communication, Mar. 20* 1991.

[20]Robert L. Peterson and Stephen L. New, op. cit., footnote 1, p. 2; Roy, op. cit., footnote 1, p. 38; and Brief review of APEG-PLUS by McLaren Associates for Syntex Corp., submitted to Missouri Department of Natural Resources, Oct. 10, 1990, p. 5.

[21]Roy, op. cit., footnote 1, pp. 36-37.

[22]Galson Remediation Corp., "GRC's APEG-PLUS: Dechlorination for the '90s," fact sheet, January 1991; Peterson and New, op. cit., footnote 1, p. 5.

[23]The high water solubility of this larger, stable glycol ether molecule facilitates its flushing from soil after treatment with PEG-PLUS. (Source: Brief review of APEG-PLUS, op. cit., footnote 20.)

[24]Robert L. Peterson and Stephen L. New, "Dioxin Destruction with APEG-PLUS Chemical Dechlorination" Galson Remediation Corp., paper undated; Peterson and New, op. cit., footnote 1, pp. 3-4.

Figure 3-1—Galson Remediation Corp.'s APEG-PLUS Chemical Treatment System

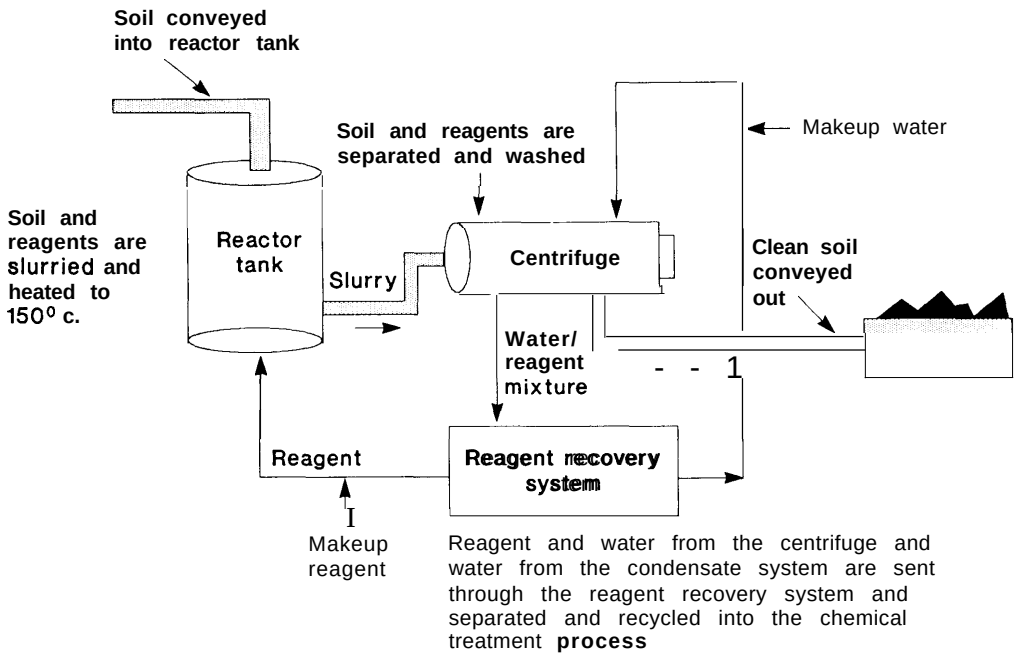

SOURCE: Galson Remediation Corp., "Galson's APEG-PLUS Treatment System-Equipment and Job Description," 1990.

a bed of activated carbon to remove dechlorinated products; the contaminated carbon is then treated. The collected reagent and wash water are sent to the reagent recovery system for recycling (soils with high clay content are known to consume reagents in significant quantities). This process may take 30 to 120 minutes.[25]

Dechlorination of oversized materials is generally accomplished by washing the soil particles and treating the washed soil. However, if the materials have concrete surfaces, they must be crushed and treated with the soil because concrete is known to absorb solvents that contain dioxins. The type and size of equipment needed to wash and crush such materials generally depend on specific site conditions.[26]

Testing and Availability of APEG-PLUS Process—The most complete demonstration of APEG-PLUS (on a pilot scale) was sponsored by EPA as part of the cleanup activities conducted at the PCB-contaminated site in Wide Beach, New York. Test results indicated that cleanup levels could be met; the pilot-scale test also showed that reagents could be recycled up to seven times without noticeable reduction in the ability of the treatment to meet the required cleanup level. Results of this and other tests have shown that dioxins are most susceptible to APEG-PLUS, followed by PCBs and pentachlorophenol (PCP).

Concerned about the toxicity of dechlorination byproducts from treated dioxin-contaminated soil, the EPA Risk Reduction Engineering Laboratory (Cincinnati, Ohio), asked scientists at the Health Effects Research Laboratory (HERL) in North Carolina to evaluate whether its residues or byproducts were toxic or mutagenic .27 At the end of the test, HERL concluded that:

- the alkaline polyethylene glycol mixture was neither toxic nor mutagenic to ***Salmonella strains*** studied,
- dechlorination byproducts resulting from the treatment of 2,3,7,8-tetrachlorodibenzo-p-

[25]Peterson and New, op. cit., footnote 1, p. 8.; Kimberly A. Roy, op. cit., footnote 1.

[26]Galson Remediation Corp., "Galson's APEG-PLUS Treatment System: Equipment and Job Description," undated, p. 2.

[27]David M. DeMarini and Jane E. Simmons, "Toxicological Evaluation of By-Products From Chemically Dechlorinated 2,3,7,8 -TCDD," *Chemosphere*, vol. 18, No. 11-12, 1989, pp. 2293-2294.

dioxin (TCDD) were toxic but not mutagenic to guinea pigs, and
- no deaths occurred from exposure of guinea pigs to dechlorination residues.

Studies on fish (carp) led to similar conclusions. No effects on liver tissue and thymus gland were detected.[28] HERL stated at the end of the report that

> ... the present study provides evidence for the efficacy and relative safety of KPEG for dechlorinating TCDD and helps to put KPEG in context with other clean-up technologies. "[29]

Other tests conducted by EPA at Research Triangle Park, North Carolina and Duluth, Minnesota on samples containing dechlorinated waste from the Butte, Missouri and Western Processing, Washington sites showed no toxic effects (including bioaccumulation, cell mutation, acute toxicity) from exposure to byproducts.[30]

APEG-PLUS technology has been applied at several contaminated sites in the United States. Some of these are:

- Montana Pole, Butte, Montana—This 20-acre site, formerly a wood-treating facility, is located in an abandoned mining site in which soil and groundwater were contaminated with dioxins and furans. In January 1986, research was conducted to determine if APEG-PLUS dechlorination could be used to treat nearly 9,000 gallons of dioxin- and furan-containing petroleum oil collected from groundwater over a 2-year period. The oil was estimated to contain 3.5 percent PCPs; dioxin and furan concentrations ranged from 422 to 83,923 ppb. Because of the success achieved, particularly with respect to the presence of dioxins and furans in the waste, EPA selected APEG-PLUS technology for treatment of the remaining 9,000 gallons of contaminated oil at the site. Complete decontamination was achieved in July 1986. Neither dioxin nor furan derivatives were detected in treated oils at limits of detection (part-per-trillion level) .31
- Western Processing Site, Kent, Washington—The Western Processing site was remediated almost completely in 1984; the only remaining task involved treating more than 7,500 gallons of spent solvents contained in a storage tank. These materials were known to be contaminated with dioxins[32] at levels of about 120 ppb. Treatment with dechlorination was accomplished in September 1986, by using the reactor employed earlier at the Montana Pole, Montana site. No dioxin was found in the treated solvents at the detection limit of 0.3 ppb.[33]
- Signo Trading Site, New York—Remediation at the Signo Trading site involved dechlorination of about 7 gallons of dioxin-contaminated liquid waste retrieved from the Signo warehouse in Mount Vernon, New York. The liquid was treated in a 40-gallon drum for 50 minutes. No dioxin was found in the treated oil at a detection limit of 0.3 ppb; as a consequence, EPA's Dioxin Disposal Advisory Group declared the treated waste dioxin-flee and no longer subject to the Resource Conservation and Recovery Act (RCRA) dioxin-listing rule.[34]
- Wide Beach, New York—The Wide Beach site is a 55-acre residential community located in the Town of Brant, about 30 miles south of Buffalo, on the shores of Lake Erie. In 1980, State officials estimated that this site contained 30,000 to 40,000 cubic yards of PCB-contaminated soil resulting from the application of dust suppressants between 1968 and 1978. PCB levels, primarily Aroclor 1254, ranged from 10 to 1,000 ppm. In 1985, despite the fact that a large-scale dechlorination system was not commercially available, EPA selected

[28] Ibid., pp. 2296-2297; Thomas O. Tiernan, "Treatment of Chemical and Contaminated Soils Containing Halogenated Compounds and Various Metals With Potassium-Polyethylene Glycol Reagent," *Proceedings of the Oak Ridge Model Conference,* Oct. 13-16, 1987, Oak Ridge, TN, p. 126; David DeMarini, U.S. EPA, Health Effects Research Laboratory, personal Communication Jan. 9, 1991.

[29] DeMarini and Simmons, op. cit., footnote 27, p. 2299.

[30] Harmut S. Fuhr and J. Paul E. des Rosiers, "Methods of Degradation Destruction, Detoxification, and Disposal of Dioxins and Related Compounds," *Pilot Study on International Information Exchange and Related Compounds (North* Atlantic Treaty Organization Committee on the Challenges of Modem Society, Report No. 174, August 1988), pp. 5-6.

[31] Kornel, Rogers, Sparks, op. cit., footnote 8, p. 462; Tiernan, op. cit., footnote 28, p, 114.

[32] Primarily 2,3,7,8-TCDD.

[33] des Rosiers, op. cit., footnote 3, pp. 343-345.

[34] Memorandum from Paul des Rosiers, Chairman, Dioxin Disposal Advisory Group, to Charles E. Fitzsimmons, On-Scene Coordinator, EPA Region II, Edison, NJ.

dechlorination (KPEG) as the specified technology for treating soil containing PCBs at concentrations higher than 10 ppm. From October 1990 to October 1991, the 200-ton-per-day unit located at the Wide Beach Superfund site successfully treated more than 42,000 tons of contaminated soil; equipment removal is now taking place.[35]

- U.S. Navy Base, Guam—The Guam site corresponds to a l/4-mile-long storm drainage ditch contaminated with PCBs from transformer repair operations and past hazardous waste disposal practices at the U.S. Naval Public Works Center. Remediation of the site is required by both CERCLA (Comprehensive Environmental Response, Compensation, and Liability Act) and RCRA.[36] Results of characterization studies estimate that PCBs (primarily Aroclor 1260) are present at levels ranging from O to 6,500 ppm; the total volume of soil contaminated with 25 ppm or more of PCBs is estimated to be 4,000 cubic yards (5,500 tons) .37 APEG[38] treatment of soil during two separate pilot-scale studies in 1988 showed PCB destruction efficiencies greater than 99.9 percent. Larger field-scale testing is under way at the site.[39]

In the past, critics have claimed that the APEG-PLUS process was too time-consuming and costly to treat certain soils. Reaction time does not seem to be a problem now, but APEG-PLUS's limited record on dioxin-contaminated soil, coupled with the risk that its liquid byproducts may require incineration—thus making it less cost-effective—may still be significant factors to consider.

In addition to the full-scale mobile treatment unit currently available, which is capable of treating 40 tons of contaminated soil daily, GRC officials expect to offer a 100-gallon reactor pilot unit soon. The construction of several truck-mounted units and of a "treatment train" that would include bioremediation, solidification, and metal extraction procedures is also planned.[40]

According to company officials, given 24-hour-a-day operation, 7 days a week, for 260 days a year, the cleanup of nearly 100,000 cubic yards of dioxin-contaminated soil (at a site such as Times Beach) could be accomplished in about **2-1/2 years** by using GRC's 200-ton-per-day facility.

Although APEG-PLUS has been tested at a number of sites, some public officials continue to view it as a highly experimental technology .41

Cost Estimates for APEG-PLUS Process—For PCB-contaminated soil, APEG-PLUS processing costs have ranged between $100 and $800 per ton, depending on factors such as the nature and volume of soil treated, characteristics of the site, and cleanup levels required. At the U.S. Naval Public Works Center in Guam, for example, the cost of dechlorinating PCB-contaminated soil with APEG-PLUS was anticipated to be about $270 per ton.[42]

The above figures, however, do not include the costs incurred by: 1) performance of treatability studies prior to actual treatment (about $25,000 to $30,000 for an average site), 2) excavation and handling of soil, and 3) final disposal of waste (RCRA incinerator or onsite if delisted).[43] Remediation costs can be further affected by the price of electricity, the cost of fuels and chemicals, the

---

[35]Brief review of APEG-PLUS prepared by McLaren Associates for Syntex Corp., and submitted to Missouri Department of Natural Resources on Oct. 10, 1990, p. 5; Michael Andurer and Chofran Tsang, "Bench and Pilot Testing of the KPEG Process on PCB-Contaminated Soils," EBASCO Services, Inc., Oct. 10, 1990, pp. 1,2, 5; and Alister Montgomery, Canonie Environmental, personal communication, Mar. 20 and Oct. 31, 1991.

[36]Naval Civil Engineering Laboratory, Engineering Evaluation/Cost Analysis @E/CA) for the Removal and Treatment of PCB-Contaminated Soils at Building 3009 Site, Naval Civil Engineering Laboratory, Port Hueneme, CA, July 3, 1990, pp. 1-2.

[37]Ibid., p. 3.

[38]This reagent, developed in EPA's RREL, is composed only of polyethylene glycol and potassium hydroxide.

[39]Kornel, Rogers, and Sparks, op. cit., footnote 8, PP. 462-464.

[40]Galson Remediation Corp., op. cit., footnote 22.

[41]Memorandum from David A. Shorr, Director, Division of Environmental Quality, to G. Tracy Mehan, III, Director, Missouri Department of Natural Resources, July 3, 1990, p. 3; Paul E. des Rosiers, Chairman, Dioxin Disposal Advisory Group, U.S. Environmental Protection Agency, personal communication, June 10, 1991.

[42]Naval Civil Engineering Laboratory, op. cit., footnote 36.

[43]Brief review of APEG-PLUS, op. cit., footnote 20.

efficiency of the centrifuge stage, and off-site transportation if required.[44]

For dioxin-contaminated sites, the costs incurred by APEG-PLUS treatment are expected to be higher than those for PCBs due to the more stringent cleanup level required. According to a public official, the cost of using APEG-PLUS at Times Beach, Missouri "will be about the same as thermal destruction.' '[45]

Base-Catalyzed Decomposition Process (Free-Radical Dehalogenation)

The base-catalyzed decomposition (BCD) process[46] developed by RREL in Cincinnati, Ohio, was initiated in 1989 after pilot-scale testing of APEG had been completed on Guam.[47] The BCD process was developed to eliminate processing problems experienced during the Guam field test of APEG.

Unlike APEG, the BCD process:

- reduces the processing requirements of soil (size reduction to 0.5 inch or less);
- employs lower-cost bases such as sodium bicarbonate or sodium hydroxide instead of the more costly potassium hydroxide;
- eliminates the need to use costly polyethylene glycol as a reagent component;
- treats soil or other matrices in minutes rather than hours;
- employs reagents in concentrations as low as 1 to 5 percent by weight of the matrix to be treated;
- eliminates the need to recover and recycle reagents;
- achieves complete dechlorination of pollutants in contaminated matrices; and
- reduces the volume of waste for disposal.

BCD processes employ hydrogen from hydrogen donor compounds[48] to effect the removal of halogens or chlorine from halogenated compounds. This is accomplished by treating the contaminated matrices in the presence of a hydrogen donor and base at higher temperature (250 to 350 'C) than in the APEG-PLUS method (150 to 180 'C).

Once heated to temperature in the presence of a base, the organically bound hydrogen is released as a nucleophile, to combine with and remove chlorine from chlorinated compounds (hydrogenation).

Testing and Availability of BCD Process—In treatability tests, the BCD process has been demonstrated on a laboratory scale to destroy PCBs (3,000 ppm) in soil to less than 0.4 ppm within 2 hours. Also, in recent treatability tests on the phenoxy herbicides 2,4-D-[49], 2,4,5-T-[50], Silvex-, and dioxin-contaminated soil from the Jacksonville and Rogers Landfills in Jacksonville, Arkansas, BCD destroyed the herbicides and reduced dioxins to the part-per-trillion (ppt) level.[51]

Currently, the EPA Region VII has approximately 25,000 gallons of herbicides (42 percent), 2,4,D-, and 2,4,5-T contaminated with up to 4,000 ppb of TCDD for disposal. In treatability tests, BCD has achieved complete destruction of the 42-percent herbicide and reduction of TCDD to an average of 100 ppt. Although the BCD process was developed to reduce chlorinated organics in contaminated matrices to ppm concentrations, it has also been demonstrated to destroy chlorinated organics at a concentration of 42 percent. Tests are going on to examine the use of BCD to treat 70,000 gallons of PCBs in transformer oil (60 percent) on a U.S. Department of Energy (DOE) site, as well as the 25,000 gallons of herbicide and 1.3 million pounds of 2,4-D/2,4,5-T vermiculite formulation contaminated with TCDD in EPA Region VII. Test results confirmed that BCD is a candidate technology for the cleanup of halo-carbon-contaminated liquids

[44]Memorandum from Shorr, op. cit., footnote 41, pp. 1-2; Galson Remediation Corp., op. cit., footnote 26, p. 3; Roy, op. cit., footnote 1, P. 38; and des Rosiers, op. cit., footnote 3, p. 343.

[45]Memorandum from Shorr, op. Cit., footnote 41, p. 2.

[46]C.J. Rogers, Alfred Kornel, and Harold Sparks, *Method for Destruction of Halogenared Compounds in Contaminated Medium*, patentNo. 5,019,175; May 1991.

[47]Naval Civil Engineering Laboratory, op. cit., footnote 36, p. 9; and Charles Rogers, U.S. EPA, Risk Reduction Engineering Laboratory, personal communication Dee. 17, 1990, Apr. 1, 1991, and Oct. 28, 1991.

[48]Charles J. Rogers et al., "Base Catalyzed Decomposition of Toxic and Hazardous Chemicals," paper presented at the HazPac '91 Conference, cairns, Australia, Apr. 17, 1991; U.S. EPA pending patent No. 07/515,892, April 1990.

[49]2,4-dichlorophenoxyacetic acid.

[50]2,4,5-trichlorophenoxyacetic acid.

[51]Rogers et al., op. Cit., footnote 48.

and soils in an environmentally acceptable manner (closed system).

BCD treatment has been selected over both incineration and APEG-PLUS as the preferred technology for cleanup of the U.S. Navy's PCB-contaminated sites. The first BCD process (1 ton per hour) has been constructed and is being used to treat approximately 90 tons of PCB-contaminated soil on a U.S. Navy site in Stockton, CA. The process will then be transported to Guam to treat an additional 5,550 tons of PCB-contaminated soil, starting in December 1991.[52]

Cost Estimates for BCD Process—The limited field application of this promising technology is the primary reason for the current lack of cost estimates for BCD treatment of dioxin-contaminated soil. However, the BCD process theoretically could achieve significant cost reductions over APEG-PLUS because of the much lower cost of the reagents required. Regarding the application of the BCD process to dioxin-contaminated soil, theoretical calculations by EPA suggest that the estimated projected cost would be about $245 per ton.[53]

Thermal Gas-Phase Reductive Dechlorination[54]

Thermal technologies make use of heat as the major agent in the destruction of waste. Typical glycol- and alcohol-based dechlorination processes detoxify hazardous waste through a progressive replacement of chlorine atoms by other atoms, notably hydrogen. One new process has incorporated the best of both of these existing methodologies to develop a patented thermochemical reduction technology. This new process could be suitable for a variety of matrices, particularly waste that is primarily aqueous in nature, such as harbor sediment, landfill leachate, lagoon sludge, and potentially soil.

For the past several years, ELI-Eco Logic International, Inc. (Rockport, Ontario and Ann Arbor, Michigan) has been conducting research on a bench scale, a laboratory scale, and a mobile pilot-scale field unit for the destruction of toxic waste. Several criteria have been used in developing the process technology, including maximization of destruction efficiency, absence of dioxin or furan formation, continuous process monitoring, process control suitability, suitability for aqueous waste, mobility as opposed to transportability, and reasonable waste processing costs.

Thermal gas-phase reductive dechlorination is based on the gas-phase thermochemical reaction of hydrogen with organic matter and chlorinated organic compounds at elevated temperature. At or above 850 'C, hydrogen reacts with organic compounds reductively to produce smaller, lighter hydrocarbons. For chlorinated organic compounds such as dioxins and PCBs, the reaction products include hydrogen chloride, methane, and ethylene. The reaction is enhanced by the presence of water, which also acts as a reducing agent. Bench-scale and laboratory-scale testing with compounds such as trichlorobenzene and chlorinated phenols have yielded destruction efficiencies in a range of 99.999 to 100.000 percent.

The Eco Logic process is not an incineration technology. Combustion and incineration processes destroy chlorinated organic waste by breaking down contaminant molecules at high temperature and then combining them with oxygen, usually from the atmosphere. The Eco Logic process uses hydrogen to produce a reducing atmosphere devoid of free oxygen and thus eliminates the possibility of dioxin or dibenzofuran formation.

Other nonchlorinated hazardous organic contaminants (e.g., polycyclic aromatic hydrocarbons (PAHs)), are also reduced to smaller, lighter hydrocarbons, primarily methane and ethylene. Because of the tendency of the reaction to produce lighter, more volatile gases, the process lends itself to continuous monitoring of the destruction efficiency. Incorporated into the Eco Logic technology is an online chemical ionization mass spectrometer, capable of measuring up to 36 toxic organic compounds every

[52]Charles Rogers, U.S. EPA, op. cit., footnote 47; Department of the Navy, Naval Civil Engineering Laboratory, *Chemical Dehalogenation Treatment: Based-Catalyzed Decomposition Process (BCDP)*, Technical Data Sheet (Port Hueneme, CA: Department of the Navy, August 1991).

[53]Rogers, op. cit., footnote 47; and Department of the Navy, op. cit., footnote 52.

[54]D.J. Hallett, K.R. Campbell, and W.R. Swain, "Thermal Gas-Phase Reduction of Organic Hazardous Wastes in Aqueous Matrices," *EPA Abstract Proceedings: Second Forum on Innovative Hazardous Waste Treatment Technologies: Domestic and International*, Philadelphia, PA, May 15-17,1990, EPA/500/2-09/009 (U.S. Environmental Protection Agency, 1990); D.J. Hallett and K.R. Campbell, "Demonstration Testing of a Thermal Gas Phase Reduction Process,' *Proceedings of the Third Forum on Innovative Hazardous Waste Treatment Technologies: Domestic and International*, June 11-13, 1991, Dallas, TX (U.S. Environmental Protection Agency, in press); Wayland R. Swain, Vice President, Eco Logic International, Inc., personal communication July 3, 1991 and Oct. 20, 1991; Paul W. Rodgers, Vice President, Limno Tech, Inc., personal communication, May 29, 1991.

0.1 second. Data from the mass spectrometer can be directed to the process controller so that any increase in undesirable organic compounds either alters the rate of waste or reaction gas input or, in the extreme case, halts the input of waste and alerts the operator that the system has been shut down.

Figure 3-2 is a schematic of the reactor vessel designed to accommodate thermochemical reduction. A mixture of preheated waste and hydrogen is injected through nozzles mounted tangentially near the top of the reactor. The mixture swirls around a central ceramic tube past glo-bar heaters, which heat the waste to 850 'C by the time it exits the ports at the bottom of the ceramic tube. Particulate matter up to 5 mm in diameter not entrained in the gas stream impacts the hot refractory walls of the vessel, thereby volatilizing any organic matter associated with the particulate. Larger particulate exit from the reactor bottom into a quench tank. Finer particulate entrained in the gas stream flow up the ceramic tube and through the retention zone. The reduction reaction takes place within the ceramic tube and requires less than 1 second to come to completion.

Figure 3-3 presents a complete process schematic of the field demonstration unit. In this unit, waste liquid and suspended solids are pumped from a small storage tank to a heat exchanger vessel for preheating to 150°C by a small boiler. The hot liquid and steam from the watery waste are metered continuously by use of special metering valves and are injected into the reactor by use of atomizing nozzles. A mixture of hydrogen and recirculation gas also enters the reactor near the top after passage through a gas-fired heat exchanger. Heavy particulate exit as grit from the bottom to a quench tank. Fine particulate matter passes up the ceramic tube (shown in figure 3-2) where gas-phase reduction takes place. Additional residence time is provided by the retention zone elbow and extension pipe. On exiting the reaction zone, gases enter the scrubber where they are quenched by direct injection of scrubber water spray. Hydrogen chloride and fine particulate matter are removed by contact with scrubber water as the gases pass through carbon steel scrubber media on the down leg and polypropylene on the scrubber up leg. Scrubber water is collected in a tank by means of a large water-sealed vent, which also acts as an emergency pressure relief duct. Scrubber water is cooled to 35 °C by using a heat exchanger fed by cooling water from an evaporative cooler. Sludge and decant water represent the two effluent streams from the scrubber. Both of these effluents are held in tanks for batch analysis prior to disposal.

Figure 3-2—Reactor Used for Thermochemical Treatment in Eco Logic Process

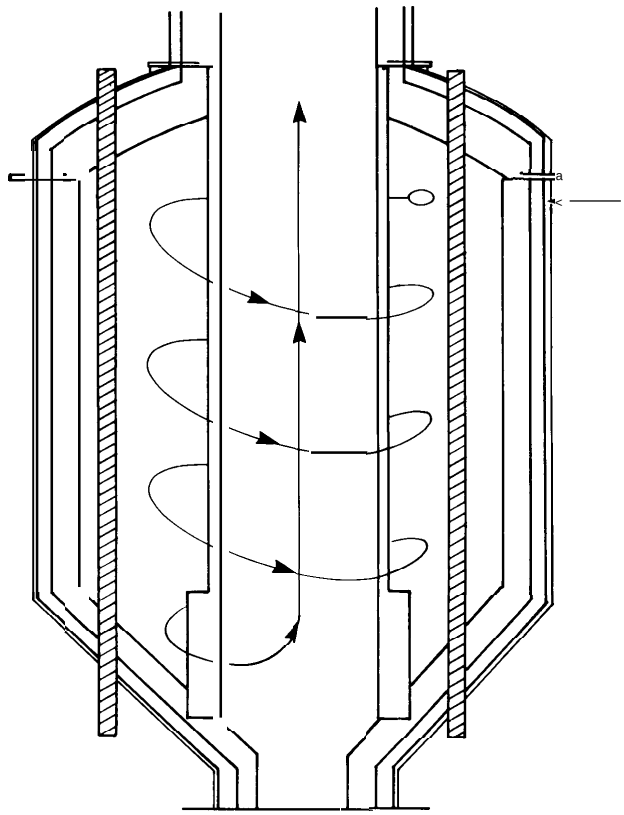

SOURCE: ELI-Eco Logic International, Inc., Ann Arbor, MI, 1991.

Gases that exit the scrubber consist of excess hydrogen, reduction products (e.g., methane and ethylene), and a small amount of water vapor. Approximately 95 percent of this gas is recirculated to the reactor after being reheated to 500 'C. The remaining 5 percent of the hydrocarbon-rich gas is used as supplementary fuel for the boiler. The boiler uses propane gas as its main fuel to produce steam for use in the heat exchanger. The only air emissions are from the boiler in the form of stack gas. Because the fuel going into the boiler is very clean (i.e., no chlorine content), emissions from the boiler to the air are insignificant.

In the event of a process upset in which total destruction of hazardous organic compounds is incomplete, the online mass spectrometer automatically diverts all gases into the recirculation mode. No sidestream gas is sent to the boiler, and the waste

Figure 3-3-Schematic Flow Diagram of the Thermal Gas-Phase Reductive Dechlorination Process

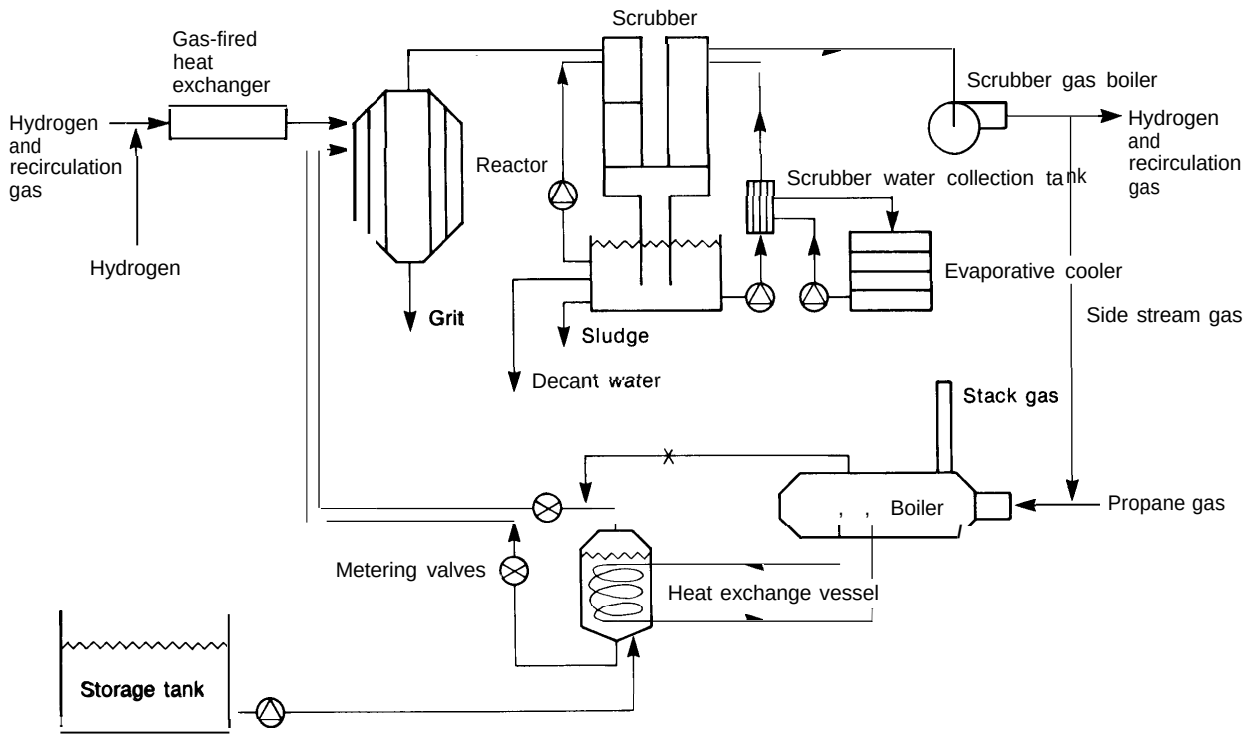

SOURCE: ELI-Eco Logic International, Inc., Ann Arbor, MI, 1991.

feed is stopped. Recirculation continues until analysis indicates that the reaction is again occurring optimally. Because 95 percent of the gas stream is recirculated under normal conditions, this procedure does not represent a drastic action.

The entire Eco Logic technology is contained on two 45-foot drop-deck flatbed trailers and thus is mobile. An additional trailer, housing the online mass spectrometer, the process control unit, and other analytical equipment, completes the array of equipment necessary for waste destruction. Onsite, the space required for processing waste is little more than the size of the three trailers. Setup time for this system is a matter of a few days, and the minimum run with this device may be less than a single unit's daily capacity. On the other end of the spectrum, the continuous throughput process is well suited to high-volume, long-run waste destruction. Throughput capacity can be varied at will by attaching additional reactor units to a single ancillary support and control system, thereby allowing flexibility of operation and redundancy of design.

Some of the largest and most serious contaminant remediation requirements involve soil and sediment having high water content. Incineration technologies consume very large amounts of energy to heat up the water component to combustion temperature. Additionally, because these technologies utilize air (79 percent nitrogen) for combustion and must combust all the organic matter, they often require 10 times the volume of the Eco Logic process for the same residence time of reaction. Other dechlorination technologies (e.g., APEG, KPEG, APEG-PLUS) are much less efficient in treating water-bearing waste because of consumption of the reagent by water, and a potential for explosive reaction exists. By contrast, in dealing with soil and sediment having a high water content, the Eco Logic process employs typical sediment/water mixtures in a range of 30 to 50 percent as optimal for this unit. Treatment material containing less than 30 percent solids is possible, but the economy of the destruction process begins to diminish below this level.

Testing and Availability of Thermal Gas-Phase Reductive Dechlorination Process—At the time of preparation of this paper, the Eco Logic technology has been successfully tested by the Canadian Federal Government and the government of the Province of Ontario in a site demonstration in Hamilton, Ontario, Canada. The site demonstration began on April 8, 1991 and took about 4 months to complete. The demonstration consisted of the destruction of contaminated sediments (not dioxin) from Hamilton Harbor in Lake Ontario under the auspices and supervision of Environment Canada's Contaminated Sediments Treatment Program and the Province of Ontario's Technologies Program. Preliminary results show thermal gas-phase reductive dechlorination to be highly effective in the treatment and volume reduction of contaminated harbor sediments.

A single full-scale reactor vessel has been designed to process 12 kilograms (26 pounds) of waste per minute under normal operating conditions. This throughput is, of course, dependent on the nature of the contaminant of concern, its degree of chlorination, and its water content. The range of throughput values lies between 15 and 20 tons per day. Present design planning calls for the construction of a 50-ton-per-day unit in early 1992. Because it is possible to use multiples of the reactor vessels with a single process control entity, treatment capacity can be increased easily. With the present configuration, as many as three reactors may be grouped per control unit, enabling 45 to 60 tons of waste to be treated daily. A new design would handle up to 150 tons per day.

Cost Estimates for Thermal Gas-Phase Reductive Dechlorination Process—The combination of equipment requirements and process characteristics suggests a relatively lower capital cost for the Eco Logic system compared to incineration. Operating economies to treat water-bearing waste are expected to be three to five times lower than incineration technologies of comparable capacities. Cost estimates for the destruction of waste are a function of both the chlorine content of the contaminant of concern and its concentration in the environmental matrix. For sedimentary materials containing resistant chlorine compounds (e.g., PCBs, polychlorinated dibenzofurans (PCDFs), and polychlorinated dibenzo-p-dioxins (PCDDs)) in a concentration up to 1,000 milligrams per kilogram, costs can be expected to fall in a price category of $350 to $500 per ton of waste processed. According to company officials, this range represents the total cost of processing the waste, because no residually contaminated materials remain to be transported or treated elsewhere.

Thermal Desorption/UV Destruction (Photolysis)

Thermal desorption/ultra violet (UV) radiation destruction technology consists of three main operations: 1) resorption, which involves heating the soil matrix to volatize the dioxin present; 2) scrubbing or collection of dioxin into a solvent suitable for subsequent treatment; and 3) UV treatment or exposure of the dioxin-solvent mixture to UV radiation to decompose the dioxin molecules through photochemical reactions (photolysis).[55]

Within a reactor system, dioxin-contaminated soils are continuously passed through a heating unit (rotary drum or desorber) and heated to temperatures up to 560°C to volatize the dioxin molecules present in soil particles. Once removed, the dioxin vapors, along with soil moisture, small soil particles, and air, are scrubbed with a solvent, and subsequently cooled. Prior to its release into the atmosphere, the scrubbed off-gas is passed through pollution control equipment (e.g., carbon adsorption; scrubber) to remove solvent vapors and any dioxin that may have been left untreated.[56] Following separation or filtration, the scrubber solvent is cooled and recirculated to the scrubber. The water remaining is treated (e.g., filtration, carbon adsorption) and discharged. The faltered soil particles are either recycled to the rotary drum or desorber for additional treatment or packaged for disposal (see figure 3-4).[57]

The developers of this technology (International Technologies Corp., Knoxville, Tennessee) claim that it reduces the volume of soils requiring treat-

[55]R. Helsel et al., "Technology Demonstration of a Thermal Resorption-W Photolysis Process for Decontaminating Soils Containing Herbicide Orange," J.H. Exner, *Solving Hazardous Waste Problems: Learning From Dioxins*, American Chemical Society Symposium Series 338 (Washington, DC: American Chemical Society, 1987), pp. 319-322.

[56]Ibid.; R.D. Fox, International Technology Corp., "Experience With Treatment Alternatives fOr Organohalogen Contamination," paper presented at Dioxin '90 Conference, Bayreuth, Germany, Sept. 14, 1990.

[57]Helsel et al., op. cit., footnote 55, pp. 319-322.

Figure 3-4—Low-Temperature Thermal Resorption Process

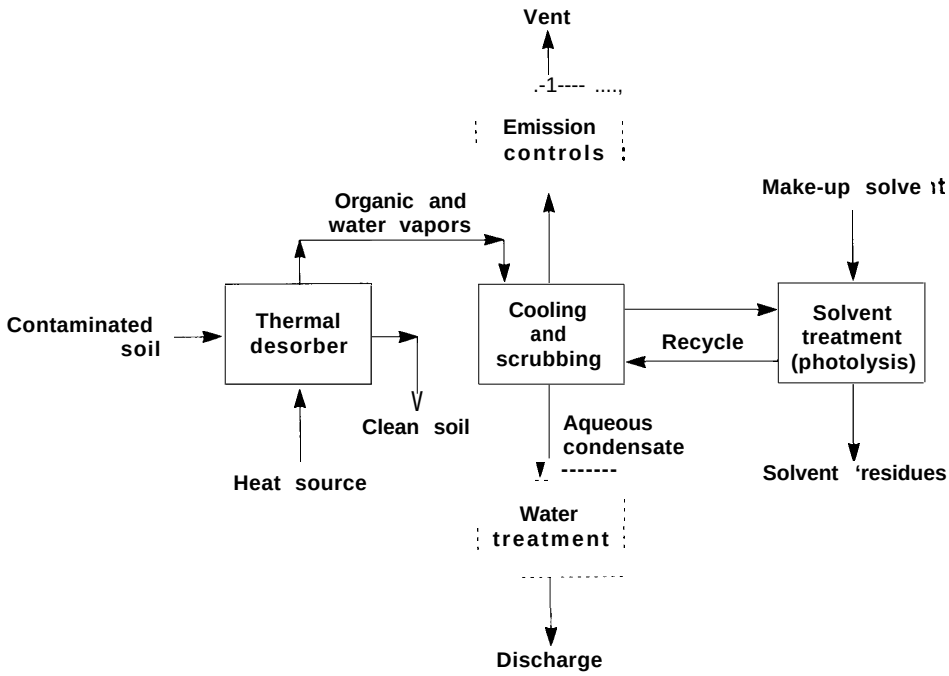

SOURCE: International Technology Corp.

ment, producing a concentrate that is easier and more cost-effective to treat. They also claim that this process will achieve cleanup goals similar to those of thermal treatment but without a high-temperature incinerator.

Testing and Availability of Thermal Resorption/ UV Destruction

Although thermal resorption/UV destruction process has been tested on soils containing highly volatile solvents, testing on soils contaminated with low volatile chemicals, such as dioxins, is limited.

Of the tests performed by International Technology Corp., only those conducted at the Department of Defense's Naval Construction Batallion Center (Gulfport, Mississippi) in 1985 and at Johnston Island in 1986 are relevant to dioxin-contaminated soils .58 59 These pilot-scale tests resulted in reducing dioxin concentrations in soil from over 200 ppb to below detection limits (0.1 ppb).[60]

The researchers who participated in the two tests concluded that ". . . additional technical information [was] needed for a complete evaluation of the process and to provide the basis for design of a full-scale system for on-site remedial action."[61] Since 1986, however, little additional work related to dioxin-treatment has been done on this process. The developers claim that lack of funds and markets are the major factors inhibiting further development.[62]

This system, however, is being applied to remediate a PCB-contaminated site in Massachusetts.[63] Also, EPA has proposed this technology as a remedial option for cleaning up nearly 40,000 cubic

[58]The contaminant of concern at these sites was Herbicide Orange known to contain 2,4-D, 2,4,5-T, and dioxin.

[59]Helsel et rd., op. cit., footnote 55, p. 320.

[60]Ibid., pp. 322-330; Paul E. des Rosiers, ''Advances in Dioxin Risk Management and Control Technologies," Chemosphere, vol. 18, Nos. 1-6.1989, p, 41; Fuhr and des Rosiers, op. cit., footnote 30, p. 33.

[61]Helsel et al., op. cit., footnote 55, p. 336.

[62]Robert D. Fox, Director, Technology Development, International Technology Corp., personal communication, Sept. 17, 1991.

[63]Robert D. Fox, International Technology Corp., personal communication, Sept. 3, 1991.

yards of PCB-contaminated soil and debris at the Carter Industrial Superfund site in Detroit, Michigan.[64] One site With dioxin contamination at which thermal resorption/UV destruction is being considered for application is Baird & McGuire (Holbrook, Massachusetts).[65] Cost estimates for its application at any of these sites, however, are not available.

BIOREMEDIATION

The use of microorganisms to break down and metabolize organic pollutants has been studied for many years, particularly for treating industrial wastewater and domestic sewage. Since the early 1970s, several organisms have been identified as having the ability to break down chlorinated substances (including dioxin species such as 2,3,7,8-TCDD in soil and in water);[66] however, neither the level of decomposition nor the products that result are known precisely. Of the different strains studied to date, the white rot fungus ***(Phanerochaete chrysosporium) is the*** most promising because of its ability to degrade halocarbons such as lindane, DDT, 4,5,6-trichlorophenol, 2,4,6-trichlorophenol, and dichlorophenol.[67,68] Encouraging results have also been reported in Germany on the biodegradation potential of the bacteria ***Pseudomonas*** sp.[69]

In general, bioremediation refers to the transformation of contaminants into less complex and probably less toxic molecules by naturally occurring microbes, by enzyme systems, or by genetically engineered microorganisms. This process can be carried out in situ or in a reaction vessel, under anaerobic or aerobic conditions, and alone or in combination with other treatment methods; several months or years may be required to achieve complete contaminant removal. Understanding the microbial population to be used, as well as the characteristics that ensure their survival, is key to any bioremediation project; these include, among other factors, moisture and oxygen levels, organic content, temperature, pH, food source availability, and possible degradation pathways. Although considerable laboratory and field work has been reported in each of these major areas,[70] few studies exist in which contaminants have been destroyed or removed at levels higher than 90 percent.[71]

Dioxins are known to degrade naturally in the presence of sunlight (ultraviolet radiation) or with the help of microorganisms. The time that dioxins

---

"'Thermal DeSorption Fix Offered in Detroit,'' *Superfund, May* 3, 1991, p. 5.

[65]U.S. Environmental Protection Agency, Region I, Superfund Program, "Fact Sheets-Treatment Technologies,'' July 1991.

[66]M. Philippi et al., "A Microbial Metabolize of TCDD," *Experiential,* vol. 38, 1982, p. 659; S. Banerjee, S. Duttagupta, and A.M. Chakrabarti, ''Production of Emulsifying Agent During Growth of *Pseudomonas cepacia* With 2,4,5-Trichlorophenoxyacetic Acid," *Arch. Microbiology, 1983 vol. 135,* p. 110; J.J. Kilbane, D.K. Chatterjee, and A.M. Chakrabarty, ''Detoxification of 2,4,5-Trichlorophenoxyacetic Acid From Contaminated Soil by *Pseudomonas cepacia,* " *Applied& Environmental Microbiology,* vol. 45, No. 5, March 1983, p. 169; D. Ghosal, L.S. You, D.K. Chatterjee, and A.M. Chakrabarty, 'Microbial Degradation of Halogenated Compounds,' *Science,* vol. 228, No. 4696, Apr. 12,1985, p. 135; Mary L. Krumme and Stephen A. Boyd, "Reductive Dechlorination of Chlorinated Phenols in Anaerobic Upflow Bioreactors," *Water Resources,* vol. 22, No. 2, 1988, p. 171; and Gary M. Klecka and D.T. Gibson, "Metabolism of Dibenzo-*p*-dioxin and Chlorinated Dibenzo-*p*-dioxins by a *Beijenrinckia* Species, " *Applied & Environmental Microbiology, vol. 39, No. 2,* February 1980, p. 288.

[67]U.S. Environmental protection Agency, op. cit., footnote 3, p. 5.38; des Rosiers, op. cit., footnote 60, p. 53.

'Rudy Baum, "Degradation Path for Dichlorophenol Found," *Chemical & Engineering News,* vol. 69, No. 1, Jan. 7,1991, pp. 22-23; Harry M. Freeman and R.A. Olexey, ''A Review of Treatment Alternatives for Dioxin Wastes," *Jnl. Air Pollution Control Assoc.,* vol. 36, No. 1, Jan. 1986, p. 74.

[69]Hauke Harms et al., ''Transformation of Dibenzo-*p*-Dioxin by *Pseudomonas sp. Strain HH69," Applied & Environmental Microbiology,* vol. *56, No. 4, 1990, pp. 1157-1159.*

[70]Sanjoy K. Bhattachayia, Tulane *University,* "Innovative Biological Processes for Treatment of Hazardous Wastes;" William R. Mahaffey and G. Compeau, ECOVA Corp., "Biodegradation of Aromatic Compounds;'' Michael J.K. Nelson, J.A. Cioffi, and H.S. Borow, "In Situ Bioremediation of TCE and Other Solvents;'' Proceedings of the HMCRI's 1 1th Annual National Conference and Exhibition *SUPERFUND '90 (Silver* Spring, MD: Hazardous Materials Control Research Institute, 1990), pp. 776-787; 800-806; 847-852. Harlan S. Borow and J.V. Kinsella, ECOVA Corp., "Bioremediation of Pesticides and Chlorinated Phenolic Herbicides—Above Ground and In Situ: Case Studies;'' Richard A. Brown and J.R. Crosbie, "Oxygen Sources for In Situ Bioremediation,'' Proceedings of the HMCRI's 10th Annual National Conference and Exhibition *SUPERFUND* '89 (Silver Spring, MD: Hazardous Materials Control ResearchInstitute, 1989), pp. 325-331; 338-344; C. Cernilia, ''Microbial Metabolism of Polycyclic Aromatic Hydrocarbons," Adv. *Appl. Microbic/.,* vol, 30, 1984, pp. 30-70; J.W. Falco, Pacific Northwest Laboratory, "Technologies to Remediate Hazardous Waste Sites" (PNL-SA-18030; DE90-011946), paper presented at the Mixed Waste Regulation Conference, Washington, DC, Apr. 17-18, 1990; D.T. Gibson and V. Subramanian, "Microbial Degradation of Hydrocarbons" D.T. Gibson (cd.), *Microbial Degradation of Organic Compounds (New* York, NY: Marcel Dekker, 1984); Harmut S. Fuhr and J. Paul E. des Rosiers, op. cit., footnote 30, p. 32; Ronald Sims, "Soil Remediation Techniques at Uncontrolled Hazardous Waste Sites-A Critical Review," *Jnl. Air Waste Manag. Assoc., 1990,* pp. 720-722; Eugene L. Madsen, ''Determining In Situ Biodegration: Facts and Challenges, *Environ. Sci. Technol.,* vol. 25, No. 10, 1991, pp. 1663-1673.

[71]Naval Civil Engineering Laboratory, op. cit., footnote 36, p. 10; U.S. Environmental Protection Agency, Op. cit., footnote 3, Pp. 5.3*5.35.

remain in soil, however, has been particularly difficult to assess because they are present in low concentrations (the lower the concentration, the more difficult it is for microorganisms to find and break down dioxins) and tightly bound to soil particles and organic matter. One laboratory study shows that even after a year of treatment, more than 50 percent of the dioxin remained in test soil.[72] Equally significant is the fact that researchers identified half-lives of more than 10 years for dioxins at the site in Seveso, Italy and at certain U.S. Air Force bases in which defoliant use has been reported.[73]

Although information from field work is limited, some potential advantages of future bioremediation methods at dioxin-contaminated sites include the following:

1. byproducts of biodegradation may be nontoxic;
2. bioremediation could be used in combination with other remedial methods (e.g., treatment trains); and
3. treatment of dioxins in subsurface soil and groundwater might not require extensive removal of overlying soil.[74]

One bioremediation technique being evaluated by EPA is in-situ microbial filters. This technology involves the injection of naturally occurring (indigenous) microbes, cultured bacteria, nutrients, and oxygen into the soil column or groundwater to form zones of microbial activity. These zones are established in close proximity to contaminant plumes to facilitate the availability of the latter to injected microbes. The bioremediation of chlorinated and nonchlorinated pollutants has as end products: carbon dioxide, water, and bacterial biomass.[75]

At present, in situ microbial technology has been tested only in the laboratory; consequently, its effectiveness in subsurface soil degradation is unknown (microbes may opt to metabolize injected nutrients instead of contaminants). Cost data are also nonexistent. A field demonstration planned at the Goose Farm Superfund site, Plumstead Township, New Jersey, was canceled in April 1990; efforts to select a new demonstration site are under way.[76] Prior to its utilization on dioxin-contaminated sites, researchers will be required to determine factors such as:

1. the level of chemical reaction that can be achieved,
2. the role of injected nutrients, and
3. the growth rate of microbes in the subsurface.

Testing and Availability of Bioremediation Technology

Although bioremediation is theoretically attractive for cleaning up dioxin-contaminated sites, its real applicability and effectiveness continue to be highly questionable. Comparisons of dioxin research efforts with 2,4,5-trichlorophenol and Agent Orange reveal that only a fraction of the vast amount of laboratory work has been targeted toward dioxin and demonstrated in the field.[77] Furthermore, the current bioremediation literature lacks any reports documenting the success of this technology in treating dioxin-contaminated soil, sludge, or sewage.[78]

Major obstacles in researching dioxin include:

1. its high acute toxicity and low volubility, such that it cannot be found in the aqueous environments in which most microorganisms live;
2. the high cost of treatment; and

---

[72] Philip C. Kearney et al., "Persistence and Metabolism of Chlorodioxins in Soils," *Environ. Sci. Technol.*, vol. 6, No. 12, November 1972, p. 1017.

[73] U.S. Environmental Protection Agency, op. cit., footnote 3, p. 5.35; A. DiDominico et al., "Accidental Releases of 2,3,7,8-Tetrachlorodibenzo-*p*-dioxin (TCDD) at Seveso, Italy," *Ecotoxicology & Environmental Safety*, vol. 4, No. 3,1980, pp. 282-356; Paul E. des Rosier% "Remedial Measures for Wastes Containing Polychlorinated Dibenzo-*p*-dioxins (PCDDs) and Dibenzofurans (PCDFs): Destruction, Containment or Process Modification," *Ann. Occup. Hyg*, vol. 27, No. 1, 1983, pp. 59-60; Ronald Sims, op. cit., footnote 70; Dermis J. Paustenbach, "Recent Developments on the Hazards Posed by 2,3,7,8-tetrachlorodibenzo-*p*-dioxin in Soil: Implications for Setting Risk-Based Cleanup Levels at Residential and Industrial Sites," paper submitted for publication to *J. Toxicol. Environ. Health*, June 1991.

[74] U.S. Environmental Protection Agency, op. cit., footnote 3, p. 5.48; U.S. Environment Protection Agency, Office of Research and Development Risk Reduction Engineering Laboratory, Technology *Profiles*, EPA/540/5-90/006 (Cincinnati, OH: November 1990), p. 40.

[75] Ibid.

[76] Ibid., p. 41.

[77] U.S. Environmental Protection Agency, op. cit., footnote 3, p. 5.44; A.M. Chakrabarty, Department of Microbiology and Immunology, University of Illinois, Chicago, personal communication Jan. 9, 1991, and Aug. 23, 1991.

[78] Fuhr and des Rosiers, op. cit., footnote 30, p. 2.

3. its presence at concentrations so low that microorganisms in the natural environment do not consider it food (i.e., an important source of carbon).

The complex nature of the soil environment found at contaminated hazardous waste sites is also a major obstacle because it prevents researchers from developing models useful for predicting bioremediation results accurately.

Experts also criticize the fact that basic environmental research is not well funded. This is due primarily to the fact that the health effects of exposure often are not visible for a long time and companies do not consider environmental bioremediation research to have a market value. Another reason for the lack of research on dioxin at the academic level is that 4 years of biodegradation research produces very little information that could be used by a graduate student to fulfill dissertation requirements. According to A.M. Chakrabarty of the Department of Microbiology and Immunology, University of Illinois, Chicago, ''There is no credible report on bacterial removal of dioxin at the present time. ' '[79]

Judging from the review performed at the U.S. Navy site in Guam for the selection of a remedial technology, bioremediation techniques must be studied further before they can be applied.[80] The long time required by bioremediation processes, coupled with their undocumented ability to reduce risks to human health and the environment, were considered by technology reviewers as sufficient reasons for not recommending soil bioremediation at that site.

In the view of most experts, bioremediation processes for dioxin are not ready for field demonstration at this time. However, they may become cleanup options in the future, aided by scientific achievements in the fields of biochemistry and genetic engineering of microorganisms, and of the chemistry of TCDD surrogates (e.g., chlorophenols, chlorobenzenes, and the herbicides 2,4,D- and 2,4,5-T).

Cost Estimates for Bioremediation

Cost figures for bioremediation of dioxins do not exist at present. One reason is that treatment of chlorinated dibenzo-p-dioxin and chlorinated dibenzofurans has not been proved beyond the analysis performed on a bench scale in 1985; no field testing has been conducted to date. According to projections based on laboratory work, in situ bioremediation might be the most economical treatment because it does not require excavation of soil. Nevertheless, in the long term, the costs of in situ bioremediation could increase considerably because tilling, fertilizing, and irrigation practices may be required.[81] Current figures, however, do not illustrate the costs involved in actual bioremediation treatment.

[79]Chakrabarty, op. cit., footnote 77.

[80]Naval Civil Engineering Laboratory, op. cit., footnote 36, p. 10.

[81]U.S. Environmental Protection Agency, op. cit., footnote 3, p. 5.46.

To complete the discussion of remediation alternatives for dioxin-contaminated sites, this chapter presents techniques that, rather than treating or destroying dioxins, are used to concentrate, stabilize, or store the contaminated material. Such approaches may be used either in conjunction with treatment or as a simpler alternative.

ONSITE SOIL WASHING TECHNOLOGIES

Soil can be washed with solvents or "soaps' (surfactants) to extract contaminants into the liquid stream, thus reducing the volume to be treated. Soil washing, though relatively new in the remediation field (as in aquifer restoration), is commonly used in mining operations. At present, however, there are no full-scale soil washing systems for treating dioxin-contaminated soil commercially available in the United States.[1]

Testing and Availability of Soil Washing Technology

One soil washing technique currently available, which may be applicable to dioxin-contaminated soil, is offered by Westinghouse Electric Corp. (WEC). According to WEC, this method has been proved effective in the treatment of soil contaminated with organic chemicals, heavy metals, and even radionuclides. Another technique is expected to be offered soon by BioTrol, Inc. (Chaska, Minnesota), for the treatment of soil contaminated with organic pollutants, including polychlorinated biphenyls (PCBs) and pesticides.

No information from full-scale studies on the efficacy of soil washing for dioxins in full-scale studies exists at the present time. A 1990 review of available technologies best equipped for cleaning up the U.S. Navy site in Guam found soil washing incapable of treating the highly PCB-contaminated soil present at the site.[2] That review, however, did not consider the WEC and BioTrol soil washing methods.

Westinghouse Electric Soil Washing Technology

The WEC process shown in figure 4-1 consists of several interconnected treatment units, including a particle separator (by size and density) and chemical extractors containing soaps to cleanup the soil. One advantage of this process is that because contaminated soil is treated in a slurry, air emissions and water discharges are eliminated. After being washed, soil is returned to the site and the concentrated residuals are processed through incineration, recycling, or stabilization techniques.

Figure 4-l—Westinghouse Soil Washing Process

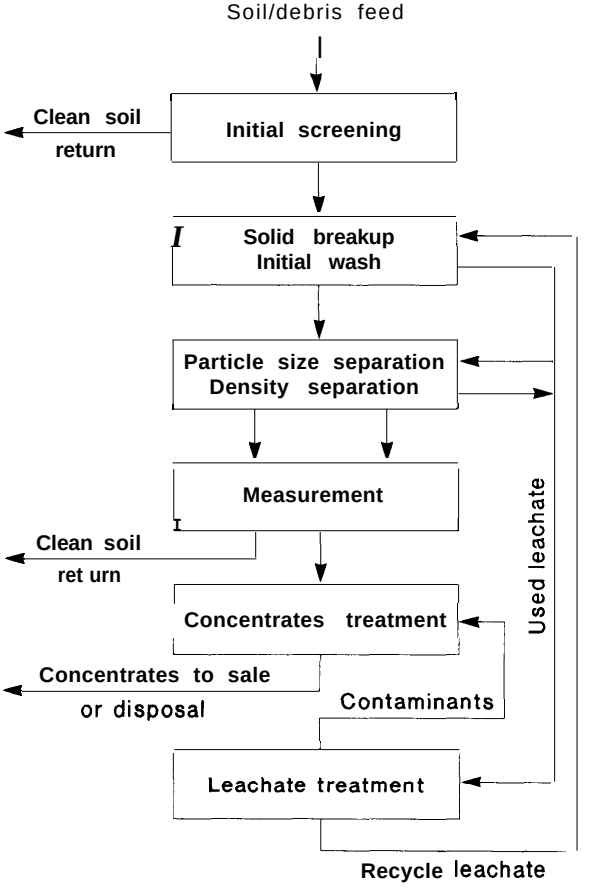

SOURCE: Westinghouse Electric Corp., "Soil Washing Applicability and Treatability Studies," undated.

[1]John Sheldon, BioTrol, Inc., personal communication, Apr. 1, 1991.

[2]Naval Civil Engineering Laboratory, "Engineering Evaluation/Cost Analysis (EE/CA) for the Removal and Treatment of PCB-Contaminated Soils at Building 3009 Site, ' Naval Civil Engineering Laboratory, Port Hueneme, CA, July 3, 1990, p. 7.

The chemical composition of the soaps (leach solutions) can be modified to address specific site needs. Processes used by Westinghouse have been employed in Europe. They were used in Germany to remove 98 percent of the polynuclear aromatics from soil (at HWZ Bodenmsanering), and more than 90 percent of the heavy metals and organics (at a site in Hamburg).

The process can be varied to address specific site conditions because studies have indicated that:

1. organics concentrate in clay, silt, and humic materials;
2. PCBs and other organic components can be leached out with caustic agents (sodium hydroxide, sodium carbonate) and surfactants;
3. the abrasive nature of soil particles can be used to improve the efficiency of the technology; and
4. heavy metals and radionuclides are usually more dense than soil.

The major steps in the WEC soil washing technique include the excavation of soil and the removal of large rocks and debris; sorting of soils by placing them in a rotating drum/vibrating screen device for size separation; and washing of the large, and probably uncontaminated, soil particles and debris (greater than 2 millimeters) with soap solution. This phase is completed by rinsing and returning large soil particles to the site.

During the second phase, the remaining contaminated soil and debris are passed through a mineral processing unit where they are exposed to soap solution and the fries present are separated. Processed soils are then washed, monitored, and finally returned to the site. The metal frees and soap (mixed with organic contaminants removed from the soil) from the mineral processor are passed through a precipitation tank, where they are exposed to precipitation agents to induce chemical separation. The clean soap solution is sent to make-up tanks for recycling; metal frees, if cleaned, are shipped for recycling, and organic concentrates are sent to biotreatment or incineration units.[3]

BioTrol Soil Washing Technology

The BioTrol technology-a patented process initially designed to treat soils-contaminated with wood preserving waste-can be used to wash soil containing hydrocarbons, pentachlorophenol, and pesticides. The BioTrol system (see figure 4-2) uses a high-intensity, countercurrent scrubber to separate freer soil particles containing the pollutants of concern from coarser soil material; contaminants that adhere to coarser materials are freed by the abrasive scouring action of the soil particles. The efficiency of the soil washing solution may be improved by: 1) adding detergents, surfactants, or chelating agents; or 2) adjusting pH and temperature. Effluents from the BioTrol system are clean soil (which can be redisposed), process water (which can be recycled or biologically treated), and contaminated soil fines. Depending on the type of pollutants present, these soil frees may be landfilled, incinerated, stabilized, or treated biologically.[4]

Preliminary results from a 1989 EPA-sponsored demonstration at the MacGillis & Gibbs Superfund site in New Brighton, Minnesota show the ability of the BioTrol technology to reduce the pentachlorophenol concentration in soil by 91 to 94 percent. The bench-scale unit tested had a treatment capacity of 12,000 pounds per day.[5]

SOLIDIFICATION AND STABILIZATION TECHNOLOGIES

Solidification and stabilization (S/S) technologies have been employed in the United States for more than 20 years to treat certain liquid industrial chemical wastes; more recently, however, their use has been expanded to treat contaminated soil and incineration residues.[6] S/S techniques focus primarily on limiting the volubility or mobility of contami-

[3]A full-scale remediation project with WEC process is being carried Out at a uranium mining site in Bruni, TX. Westinghouse Electric Corp., "Soil Washing Applicability and Treatability Studies," undated, D.C. Grant, E.J. Lahoda, and A.D. Dietrich, "Remediation of Uranium and Radium Contaminated Soil Using the Westinghouse Soil Washing Process," paper presented at the Seventh Annual DOE Model Conference, Oak Ridge, TN, Oct. 14-17, 1991.

[4]U.S. Environmental Protection Agency, Office of Research and Development, Risk Reduction Engineering Laboratory, *Technology Profiles, EPA/540/5-90/006* (Cincinnati, OH: November 1990), pp. 26-27; John K. Sheldon, BioTrol, Inc., personal communication, July 23, 1991.

[5]Ibid., p. 27.

[6]U.S. Environmental Protection Agency, Office of Research and Development, Risk Reduction Engineering Laboratory, *Immobilization Technology Seminar,* CERI-89-222 (Cincinnati, OH: October 1989), pp. 1-3.

Figure 4-2—Soil Washing System Offered by BioTrol, Inc.

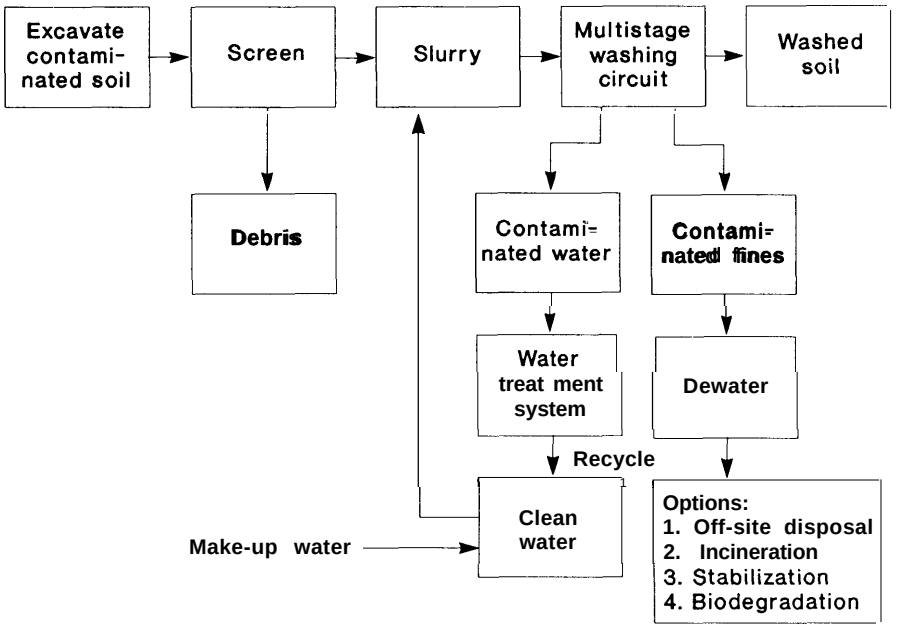

SOURCE: U.S. Environmental Protection Agency, Office of Research and Development, Risk Reduction Engineering Laboratory, *Technology Profiles*, EPA/540/5-90/006 (Cincinnati, OH: November 1990).

nants present in the medium, generally by physical means rather than by chemical reaction. This goal is achieved by one or more of the following: improving the handling and physical characteristics of the waste; decreasing the surface area of the waste mass; converting the contaminated medium into a solid block; limiting the volubility of hazardous constituents; or detoxifying the centaminants present in the waste to be treated.[7]

Historically, the physical and chemical bonding involved in complex stabilization reactions has not been rigorously researched and understood by most practitioners. Many view S/S treatments as "low tech, no-tech, or pseudo-tech."[8] More damaging, however, is the fact that claims by certain vendors on the successful application of their particular techniques are largely unsubstantiated.[9]

The long-term effectiveness of S/S treatment has always been surrounded by uncertainty. Among the factors contributing to this are: the difficulty of determining what actually occurs under field conditions; the difficulty of reproducing in the laboratory the role played by S/S materials in soil and waste; the potential for cement bonding to be retarded by contaminants; and the varying nature and size of soil particles at contaminated sites. Heat produced by the reaction between S/S chemicals and the waste may also induce the volatilization of organic compounds.[10] As a consequence, it is extremely important that bench tests be performed prior to S/S treatment to determine: 1) proper type and amount of additive, 2) applicable mixing and curing conditions, and 3) the type of long-term monitoring needed.[11] Attention to effluent treatment is not

[7]U.S. Environmental Protection Agency, Office of Research and Development, Risk Reduction Engineering Laboratory, *International Waste Technolgies/Geo-Con In Situ Stabilization/Solidification—Applications Analysis Report*, a Superfund Innovative Technology Evaluation (SITE) report, EPA/540/A5-89/004 (Cincinnati, OH: August 1990), p. 6.

[8]Jeffrey P. Newton, *The Derivation of Relevant Chemically Reactive Structures for the Fixation of Organics and Inorganics*, International Waste Technologies, Wichita, KS, January 1991, p. 2.

[9]Jeffrey P. Newton, President, International Waste Technologies, personal communication Apr. 19, 1991.

[10]U.S. Environment Protection Agency, op. cit., footnote 7, p. 16.

[11]Ibid., pp. 22-23.

necessary because all of the water consumed is used for processing purposes.[12]

According to the U.S. Environmental Protection Agency (EPA), based on the type of additive and processes used, stabilization methods can be organized into at least six different categories:

1. cement;
2. lime plus pozzolans (fly ash, kiln dust, hydrated silicic acid, etc.);
3. thermoplastic (asphalt, bitumen, polyethylene, etc.);
4. thermosetting organic polymers (ureas, phenols, epoxies, etc.);
5. vitrification; and
6. miscellaneous.

Of these groups, only cement-based, quicklime, and vitrification are being researched for their potential application to dioxin-contaminated soil.

Although traditional S/S treatment has been conducted simply by mixing two or more products from the above categories, increasing research has resulted in a series of new products that use additives (e.g., proprietary dispersants and organophilic compounds) mixed with setting agents; these mixtures seem to have a greater potential to bind organics (PCBs, petroleum hydrocarbons, coal tars, and probably dioxin) than most commercially available mixtures.[13] For now, the challenge, some vendors claim, is being able to determine the extent to which these techniques are effective and, where appropriate mechanisms of evaluation exist, to determine whether these techniques can in fact detoxify dioxins.[14,15]

EPA has selected S/S as the preferred treatment at several Superfund sites. Selection has occurred most commonly at sites with contaminated soil and acidic sediments known to contain heavy metals, for example, Sapp Battery (Florida), Marathon Battery (New York), and Independent Nail (South Carolina). EPA has also called for the application of S/S treatment to organic wastes, including PCBs, found at Pepper Steel & Alloys, Inc. (Florida),[16] York Oil (New York), Fields Brook (Ohio), and Liquid Disposal Landfill (Michigan) .17 At the majority of these sites, S/S has been conducted by bulk mixing in a pit or by treatment of waste in a tank following excavation.[18]

Testing and Availability of S/S Technology

In 1987, a laboratory study was conducted at three dioxin-contaminated eastern Missouri sites to ident@ and evaluate S/S technologies capable of eliminating the transport of dioxin from soil due to wind and water erosion. The selected sites were ***Minker site*** (a residential area known to have soil with 2,3,7,8-tetrachlorodibenzo-p-dioxin (2,3,7,8-TCDD) at 700-ppb (parts per billion) levels, and which could contaminate a nearby creek); ***Piazza Road (2,3,7,8-***TCDD was detected at the 640-ppb level); and ***Sontag Road*** (characterized by very fine soil containing 2,3,7,8 -TCDD at 32-ppb levels) .19

As part of the experiment, soil samples from the sites were mixed with varying amounts of Portland cement, emulsified asphalt, and/or lime. The cement/soil mixture was found ineffective because significant amounts of cement became loose after exposure to laboratory conditions that mimicked weathering. Emulsified asphalt, on the other hand, was found to be an effective stabilizer but only after calcitic lime had been added (about 15 percent) to the mixture. Mixing asphalt, lime, and native soil was found to be the most successful S/S technique, allowing dioxin migration only at concentrations below the detection limits.[20] (Estimated treatment costs ranged from $5 to $10 per cubic meter [emulsified asphalt] to$11 to $13 per cubic meter [Portland cement]. An estimated

---

[12]Ibid., pp. 29-30.

[13]Ibid., p. 7.

[14]Although the second factor should not be construed as a primary purpose of S/S technologies, some treatment companies claim that in addition to the cementing action, their processes also affect organic contaminants through chemical interaction.

[15]U.S. Environmental protection Agency, op. cit., footnote 7, p. 6; Newton, 0p. cit., footnote 8, p. 1.

[16]Cleanup at this site consisted of digging up contaminated soil, separating it fromdebris, mixing it with Portland cement, and returning it to its original site.

[17]U.S. Environmental Protection Agency, op. cit., footnote 7, p. 7.

[18]Ibid.

[19]Paul E. des Rosiers, "Evaluation of Technology for Wastes and Soils Contaminated With Dioxins, Furans, and Related Substances,' *Journal of Hazardous Materials,* vol. 14, No. 1, 1987, pp. 121-122.

'Ibid., p. 123.

$4 to $8 per cubic meter should be added to these amounts when health and safety costs are considered.) Although these results highlight the potential applicability of asphalt/lime as a temporary remedial measure, additional in depth studies on the long-term performance of these or other more advanced S/S technologies have yet to be conducted.

More recently, the EPA Superfund Innovative Technology Evaluation (SITE) program has undertaken the evaluation of at least seven S/S techniques. Among the methods under consideration, in addition to the quicklime process, are those designed and developed by International Waste Technologies, Inc. (Wichita, Kansas); Silicate Technology, Inc. (Scottsdale, Arizona); Separation & Recovery Systems, Inc. (Irvine, California); Soliditech, Inc. (Houston, Texas); Chemfix Technologies, Inc. (Metairie, Louisiana); and HAZCON, Inc. (Brookshire, Texas) .21

At present, some S/S techniques have proved effective for stabilizing residues resulting from chemical or thermal treatment of dioxin-contaminated material.

Although no S/S treatment offered to date is considered by EPA to be an "alternative disposal method to incineration, ' '[22] the future of this treatment has some promise. The increasing application of incineration to contaminated materials could also increase the use of stabilization techniques, particularly in those situations in which incinerated ash is prohibited from land disposal because of the hazardous constituents remaining.

EPA QUICKLIME TREATMENT

EPA's interest in evaluating certain mixtures of lime and other alkaline stabilizers originated after observing reductions in PCB levels at those sites in which S/S techniques have been employed. In order to understand the processes involved, EPA's Risk Reduction Engineering Laboratory in Cincinnati, Ohio, contracted with RMC Environmental of West Plains, Missouri, to conduct laboratory research. Although preliminary results show decreases in PCB levels, EPA scientists who reviewed the report recommended additional evaluation because the method of reduction is still unknown.

In summary, experiments were conducted on synthetic soil by using three specific PCB congeners in an open vessel containing calcium oxide (CaO) and in a closed vessel containing:

. CaO,
. cement kiln dust, or
. a combination of CaO and kiln dust.

Testing in an open vessel in a glove box indicated that significant removal of all three congeners occurred within the first 5 hours at 180 to 200 'C. However, most of the disappearance was attributed to atmospheric releases through dusting, vaporization, and steam stripping. From these results, researchers expected that field demonstrations would result in slower rates of removal than experienced in the laboratory because they would be carried out at much lower temperature. The closed-vessel experiments, on the other hand, were conducted at lower temperature and had significantly lower rates of volatilization and steam stripping. Chemical dechlorination and destruction were found to account for less than 7 percent of the measured removal.[23]

EPA plans to support further laboratory investigations to examine the decomposition and volatilization process attributed to quicklime. Field examinations are also planned.[24]

INTERNATIONAL WASTE TECHNOLOGIES TREATMENT

The International Waste Technologies (IWT) process, advanced chemical fixation, is a cement-based process that uses proprietary additives (organophilic clays) to solidify and stabilize waste, and to promote chemical bonding between the contaminants in the waste and the cement matrix.[25] The ability to alter the molecular structure of organic pollutants, including PCBs, has encouraged company officials to conclude that the IWT fixation

[21] U.S. Environmental Protection Agency, op. cit., footnote 6, pp. 1-3.

[22] U.S. Environmental Protection Agency, op. cit., footnote 7, p. 20.

[23] U.S. Environmental Protection Agency, Office of Research and Development, Risk Reduction Engineering Laboratory, *Status Report: Quicklime Treatment of PCBs* (Cincinnati, OH: May 1991).

[24] Letter from John Convery, Deputy Director, U.S. EPA Risk Reduction Engineering Laboratory to German Reyes, Office of Technology Assessment, June 11, 1991.

[25] U.S. Environmental Protection Agency, op. Cit., footnote 7, p. 21.

process "sufficiently bonds and prevents the leaching of the PCB decomposition products, substituted benzenes and phenol compounds.' '[26]

As opposed to all competing S/S techniques, which require excavation, treatment, and redisposal of soil, the IWT process calls for the use of in situ treatment only, thus eliminating the costs of soil excavation, sizing, handling, and redisposal.[27] This treatment may be tailored to address the specific types of chemicals requiring treatment.

Of the evaluations performed on the IWT process, the most extensive to date has been the bench-scale demonstration conducted in April 1988, under EPA's SITE program at a General Electric site in Miami, Florida. In addition to evaluating the form of treatment, which consisted of injecting IWT's chemical fixation material into PCB-contaminated soil by use of mixing drills,[28] EPA engineers studied all possible reaction mechanisms and the extent of chemical fixation.

Some of the results from chemical analyses performed on samples taken during the first 2 weeks following the test included: 1) a 5- to 10-percent increase in volume of treated soil; 2) the potential long-term durability, low permeability and porosity, and high integrity of the solidified material; and 3) the probable immobilization of PCBs and heavy metals.[29] Although the reduction of volatile organic compounds was shown to occur, data limitations prohibited EPA from confirming the extent to which the IWT process immobilized these chemicals in the solidified soil. As a consequence, EPA considered the results of the evaluation inconclusive,[30] stating that "since very limited bench-scale studies have been performed, it is recommended that treatability studies-site specific leaching, permeability, and physical tests—be performed on each specific site to be treated . . . whether low or high in organic content. ' '[31 32]

More successful data have been gathered in the Netherlands from bench-scale tests of soil and sludge containing heavy metals, pesticides, and other organic compounds, such as pentachlorophenol.[33] Results obtained from bench-scale tests demonstrated that the maximum concentration of dioxin[34] detectable after treatment with the IWT process was 10.4 parts per trillion (ppt). Tetrachlorodibenzo-p-dioxin, the same dioxin species of concern at Times Beach, was found at only the 3.O-ppt level.[35]

More recently, several studies of the IWT process conducted by both IWT and EPA have provided more optimistic results. IWT researchers, for example, have conducted various studies to prove that their fixation process bonds or destroys the organic contaminants present in waste. Results of these studies, however, have not been incorporated into the EPA demonstration process.[36] Despite the additional research required, EPA estimates that the IWT process has the potential to "meet many of the current or potential regulations for both organics and metals [particularly] where reductions in the contaminant concentration in the wastes are [required to be] measured."[37]

---

[26] Newton, op. cit., footnote 8, p. 2.

[27] U.S. Environmental Protection Agency, Op. Cit., footnote 7, pp. 34-35.

[28] Newton, op. cit., footnote 8, p. 9.

[29] U.S. Environmental Protection Agency, op. cit., footnote 7, pp. v, 2, 3, 9.

[30] Ibid., pp. 12-13.

[31] U.S. Environmental Protection Agency, op. cit., footnote 7, pp. 2, 10.

[32] According to a company official, the EPA conclusion is considered inadequate because: 1) EPA failed to apply the type of chemical analysis that would identify the extent and relevance of chemical bonding that occurs; 2) the SITE evaluation team lacked experts on organic/inorganic chemistry, clay chemistry, and physics; and 3) EPA failed to test whether freezing temperatures affected the ability of the additive to prevent leaching of chemicals (only physical structure was tested). Sources: Jeffrey P. Newton, President, International Waste Technologies, personal communication, Apr. 19, 1991; and U.S. Environmental Protection Agency, op. cit., footnote 7, pp. 46-48.

[33] Newton, op. cit., footnote 8, p. 16.

[34] heptachlorodibenzo-*p*-dioxin

[35] Jeffrey P. Newton, President, International Waste Technologies, personal communication, Apr. 5>19910

[36] U.S. Environmental Protection Agency, op. cit., footnote 7, P. 13.

[37] U.S. Environmental Protection Agency, Office of Research and Development, op. cit., footnote 7, p. 13; U.S. Environmental protection Agency, Office of Research and Development Risk Reduction Engineering Laboratory, *Technology Demonstration Summary. International Waste Technolgies/Geo-Con In Situ Stabilization/Solidification: Update Report,* EPA/540/S5-89/004a (Cincinnati, OH: January 1991).

UNDERGROUND MINE STORAGE

The use of underground mines as a method for storing hazardous waste is more common in Europe than in the United States. In Germany, for example, the increasing unavailability of storage capacity has prompted the storage of highly contaminated dioxin waste in underground mines. With the exception of packaging and labeling, this waste undergoes no special pretreatment. According to reports, efforts by the public and private sectors are focused primarily on searching for ways in which to store other dioxin-containing wastes such as fly ash and dust.[38]

Unlike Europe, research and evaluation efforts in the United States on underground mine storage of dioxin-contaminated materials are limited. One research project was conducted in 1985 under the auspices of the Missouri Department of Natural Resources, EPA Region VII, and the University of Missouri School of Mines.

The main purpose of the Missouri study was to evaluate the feasibility of shallow underground mines as repository sites for soil originating from cleanup activities at some of the 44 dioxin-contaminated sites in the State. In its scope, the study covered 29 existing mines on the basis of dryness, structural stability, potential size, location, accessibility, packaging devices,[39] and costs. At its culmination, the project showed that shallow underground limestone and dolomite mines are most suitable for storing dioxin-centaining soil, followed by sandstone, lead-zinc, iron, and coal mines.[40]

Another conclusion of the study was that the costs of developing a dioxin repository are affected significantly by the type of container (steel vault, steel drum, woven polypropylene sacks), as well as the packaging arrangement selected. With regard to capital costs, researchers estimated that costs of handling[41] and storing dioxin-contaminated soil at existing underground mines were lower ($225 to $275) than those of excavating, bagging, and temporarily storing soil from three Missouri sites in steel-sided storage structures ($754 to $1,008).[42]

After the Missouri study, researchers began to assess the feasibility of digging new underground depots to store contaminated soil.[43] Constructing new mines instead of using existing ones is being considered because storage costs may be reduced through eliminating the expense of rehabilitating existing, inactive mines. In addition, efforts to identify and evaluate permitting, packaging, monitoring, and transportation issues are planned.[44]

ABOVEGROUND, ELEVATED STORAGE BUILDINGS

Aboveground, elevated storage buildings are large, permanent buildings constructed of prestressed concrete in which dioxin-contaminated materials might be stored temporarily in drums or containers. Although none has been constructed to date, aboveground storage proponents claim that once built, these facilities would reduce the cost of shipping contaminated materials overlong distances for treatment; reduce potential of groundwater contamination from landfills due to leaching of certain toxic components of the materials stored; and reduce potential air contamination by volatile emissions. According to proponents, another significant advantage of this approach is that it would facilitate subfloor, walk-through inspections because the drums will be stacked about 10 feet above the floor (see figure 4-3). In addition, this type of storage facility

[38]Harmut S. Fuhr and J. Paul E. des Rosiers, "Methods of Degradation Destruction, Detoxification, and Disposal of Dioxins and Related Compounds, " *Pilot Study on International Information Exchange and Related Compounds* (North Atlantic Treaty Organization, Committee on the Challenges of Modem Society, report No. 174, August 1988), p. 21.

[39]Among the packaging options assessed were rectangular steel vaults, steel drums, and woven polypropylene sacks. The last type of containment, also called "supersacks," was the least expensive and had the largest storage capacity.

@ales Rosiers, op. cit., footnote 19, pp. 124-125.

[41]Handling costs were found to represent about one-third of the overall costs.

[42]des Rosiers, op. cit., footnote 19, p. 126.

[43]Fuhr and des Rosiers, op. cit., footnote 38, pp. 21-22.

[44]des Rosiers, op. cit., footnote 19, p. 126.

Figure 4-3—Example of Proposed Design for Aboveground Storage Facility

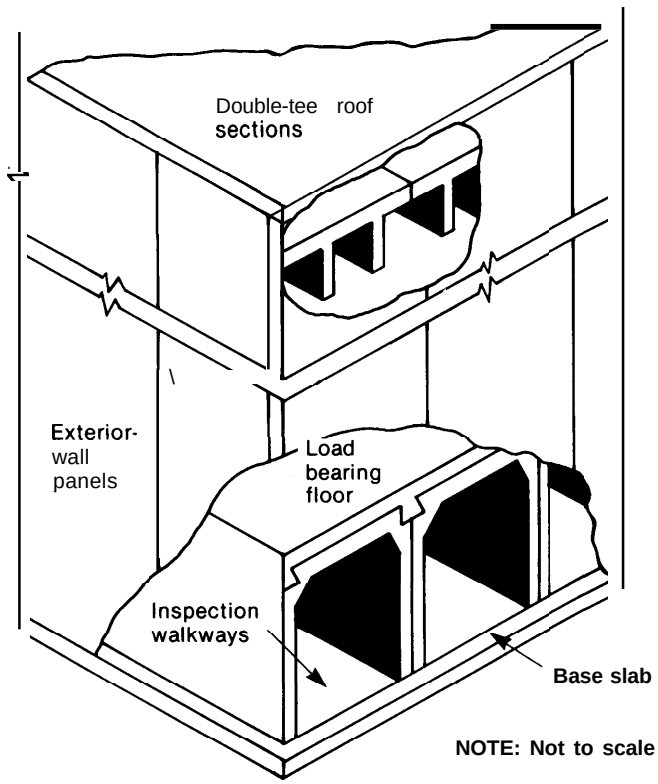

SOURCE: James V. Walters, University of Alabama, "Use of Elevated, Concrete Buildings for Sanitary Landfills, Hazardous-Waste Landfill, Monofill, and Cogenerator Facilities," *Journal of Resource Management & Technology, vol.* 17, No. 2, April 1989.

would allow time for the development of better technologies for treating contaminated soil.[45]

Although aboveground storage is considered a viable alternative in hazardous waste management, particularly for long-term storage of waste or residues of waste treatment, only the New Jersey Hazardous Waste Facility Siting Commission has attempted to evaluate this system.

In May 1987, the Commission issued a report of its investigation on the technical, managerial, and regulatory experience of nine selected European nations with aboveground storage. In the report, the Commission calls for aboveground storage to be considered as a feasible alternative solution to the State's "residues management" problem because it may help to:

1. mitigate the decreasing storage capacity resulting from the promulgation of regulations barming hazardous waste disposal on land;
2. ease the capacity shortage created by the recent increase in the number of landfill closures; and
3. allow additional time for replacing current treatment, storage, and disposal facilities with newer, environmentally sound ones.[46]

In November 1989, the Commission issued a report detailing design and operating criteria for above--ground storage buildings.[47] At this time, the Commission is considering design and construction plans for four different facilities in New Jersey .48

[45]James v. Walters, University of Alabama, personal communation, June 28, 1991; J.V. Walter, ''Use of Elevated, Concrete Buildings for Sanitary Landfills, Hazardous-WasteLandfill, Monofill, and Cogenerator Facilities, '' *Journal of Resource Management & Technology,* vol. 17, No. 2, April 1989, pp. 124-130; J.V. Walters et al., "Elevated, Concrete Buildings for Long-Term Management of Hazardous Wastes," *Environmental Progress,* vol. 7, *No. 4,* November 1988, pp. 224-229.

[46]Design Criteria Task Force, Design *Criteria for Above Grade Land Emplacement Facility*, report prepared for the New Jersey Hazardous Waste Facility Siting Commission, November 1989.

[47]B.W. Plasecki and D.W. Ditz, American Hazardous Control Group, *Above Ground Land Emplacements for pretreated Hazardous Waste: The European Expen-ence,* submitted to the New Jersey Hazardous Waste Facility Siting Commission, contract No. 491 O-1 OO-237O3O-5O-NM-758; project activity No. 758, May 1987.

[48]Susan Boyle, Executive Director, New Jersey Hazardous Waste Facility Siting Commission, personal communication, July 3, 1991.

Chapter 5
Technology and Cost Summary

The foregoing analysis by the Office of Technology Assessment (OTA) has covered two fundamental categories of dioxin treatment technologies-thermal and nonthermal. In addition to these, however, OTA has also considered other approaches such as stabilization or storage (where the technique is aimed at preventing migration rather than destroying the contaminants) and technologies that combine two or more techniques. The following summarizes the overall conclusions concerning each technology, based on OTA's technical analyses.

THERMAL TREATMENT TECHNOLOGIES

Several incineration techniques have been developed in the last decade for treating dioxin-contaminated soil and debris. They include rotary kiln incineration, liquid injection incineration, fluidized bed/circulating fluidized bed, high-temperature fluid wall destruction (advanced electric reactor), infrared destruction, plasma arc pyrolysis, supercritical water oxidation, and in situ vitrification.[1] Of these, only rotary kiln incineration has been fully demonstrated, is commercially available, and is permitted for cleaning up dioxin in soil such as that found at Times Beach, Missouri. This technology has the ability to treat containerized and noncontainerized solid and liquid wastes, individually or simultaneously. It has been used in at least three successful dioxin cleanup projects and appears to be able to perform in other situations (e.g., Times Beach) within current regulatory requirements.

Rotary kiln incinerators are divided into two types based on their specific design features: 1) land based (or stationary) and 2) mobile (or transportable). In addition to the obvious difference between the two types, mobile incinerators have been specifically designed with features to meet special requirements for dioxin treatment, whereas the stationary incinerators have not.

Commercially available mobile incineration facilities have participated in cleanup of various dioxin-contaminated sites. One firm offers three mobile incineration units capable of treating dioxin-contaminated soil at a maximum estimated rate of 5 tons per hour[2] with setup times of 24 hours and decontamination/demobilization times of about 72 hours. These systems have been successfully employed to treat dioxin contamination at the American Cross Arms Site (Chehalis, Washington); Fort A.P. Hill (Bowling Green, Virginia); Rocky Boy Post & Pole Site (Rocky Boy, Montana); and Black Feet Post & Pole Site (Browning, Montana). Another firm also has three mobile incinerators, two of which are operating on related cleanup work.

Today, there are four land-based rotary kiln incinerator units operating in the United States with the potential to treat dioxin-contaminated materials. Thus far, however, they have been permitted to treat only polychlorinated biphenyls (PCBs) under the authority of the Toxic Substances Control Act (TSCA). None of these facilities has treated dioxins because of the lack of appropriate operating permits under the Resource Conservation and Recovery Act (RCRA).

In addition to the above developed or operating technologies for thermal treatment of dioxins, several other options are in various stages of development. None of these, however, are available commercially as full-scale, tested systems.

Liquid incineration (LI) technology is employed in many industrial and manufacturing sectors for treatment of hazardous organic and inorganic waste. Regardless of their design (vertical LI units are preferred for treating waste that generates extensive ash; horizontal LI units are generally used for low ash-generating waste), LI incinerators are applicable only to combustible liquid wastes and thin slurries. To date, the only documented use of LI technology for dioxin destruction involves Environmental Protection Agency (EPA) -sponsored tests aboard the ocean incinerator M/T ***Vulcanus in 1977.*** Of the operating LI incinerator facilities in the United States today, only three have been shown to meet the criteria required to treat dioxin; however,

[1]Although in situ vitrification is traditionally regarded as a solidification/stabilization technology, for the purpose of this paper it was included waler thermal treatment technologies because of the high temperature required.

[2]Patrick Phillips, Executive Vice-president, Vesta Technologies, Ltd., personal communication, Mar. 25, 1991.

their operators have yet to apply for permits that would allow them to incinerate dioxin-contaminated liquid waste.

Traditionally, fluidized-bed combustion incineration (FBC) has been used for treatment of waste and sludge generated by municipal wastewater treatment plants, oil refineries, pulp and paper mills, and pharmaceutical plants. Of the approximately 25 FBC facilities built in the traditional design, only a few are employed today for treating hazardous waste. None of these facilities is permitted to treat dioxins.

Process modifications recently developed by two different firms have given FBC technology the capability of treating dioxin-contaminated materials. One firm, for example, modified the system to use a granular bed composed of a mixture of combustion catalyst and limestone rather than sand. This system has been tested successfully with dioxins; developers, however, plan to request a permit that would allow the application of the FBC unit now available only to PCB-bearing waste.

A second modification of FBC technology involves the use of a high-velocity air flow to suspend bed particles and attain more effective thermal treatment. The particle bed in this system is made up of the waste to be treated. Pilot-scale testing has demonstrated the ability of this modified FBC unit, known as the circulating-bed combustion incinerator, to meet the performance criteria required for successful dioxin destruction. Developers of the circulating-bed combustion facility are currently permitted to burn PCB-bearing waste; and even though two additional units are under construction, no plans exist at this time for requesting a permit to burn dioxins.

High-temperature fluid wall destruction advanced electric reactor (AER) technology consists of a porous tube or reactor enclosed in a hollow cylinder through which heat is radiated for waste treatment. Although originally designed by Thagard Research (California), the AER technology is known as the Huber Process because of proprietary modifications incorporated into the original design by J.M. Huber Corp. (Texas). Two of the most relevant advantages of AER with respect to dioxin treatment are: 1) the destruction of dioxins is accomplished by pyrolysis rather than oxidation as in most thermal treatment; and 2) the absence of oxygen and low gasflow rates allow for longer residence times, thus reducing the production of toxic off-gases.

The only two AER reactors available today, one stationary and one transportable, have proved successful in treating dioxin-contaminated materials, including soil at Times Beach. The developer obtained a permit to use its stationary AER unit for dioxin treatment in 1986. The firm, however, has not applied this technology since 1987, opting instead to invest in other treatment processes with greater market potential. This decision, a company official points out, would not have been made if a program to aid R&D of dioxin treatment technologies had been available.

Infrared radiation incineration was developed by Shirco Infrared Systems, Inc. (Dallas, Texas). The process involves exposing dioxin-contaminated materials to electrically heated silicon carbide elements, followed by the treatment of off-gases and the removal of ashes. A transportable pilot-scale unit was tested at Times Beach for the treatment of dioxin-contaminated soil in 1985. Test results showed that the Shirco system was able to treat dioxin-containing soil to levels exceeding those established by EPA for thermal treatment. Considerably larger treatment units (100 tons per day) have also been tested with varying degrees of success at several contaminated sites.[3] Most of the success associated with infrared incineration comes from Europe, particularly Germany, and there are no permitted facilities operating in the United States.

Plasma arc pyrolysis (PAP) incineration works much the same as incineration at high temperature by exposing the waste to a thermal plasma field. Bench-scale units developed thus far can process nearly 10 pounds per minute of contaminated solids or 55 gallons per hour of centaminated liquid waste. PAP technology is applicable only to liquid waste and contaminated soil or sludge with viscosity, similar to or lesser than 30- to 40-weight motor oil. Only one firm offers this technology today. Although the process has not been tested specifically with dioxins, certain wastes containing PCB dioxins, furans, and other chlorinated contaminants have been successfully treated to part-per-trillion levels

[3]Although the testing of a full-scale unit at Peak Oil site (Florida) and a pilot-scale unit at Township-Demode Road (Michigan) was successful, results of an EPA-funded field demonstration test of a full-scale unit were discouraging.

on bench-scale tests. Although promising for the treatment of liquid waste contaminated with dioxins, the real applicability of PAP to dioxin-containing waste is still questionable because additional research on a much larger scale is required.

Supercritical water oxidation (SCWO) technology is based on the oxidizing effect of water on organic compounds (which become extremely soluble) and inorganic substances (which become sparingly soluble) at high temperature (350 to 450 'C) and pressure (more than 218 atmospheres). A major limitation of SCWO is its ability to treat only dioxin-contamin ated liquid waste or slurries/sludges with small-sized particles. One possibility suggested by developers to address dioxins in soil is to grind and pulverize the soils and make them into a slurry that can then be treated by the SCWO process. This practice, however, needs to be successfully demonstrated in larger units. Laboratory- and bench-scale test results from liquid waste contaminated with dioxins have met the criteria required for dioxin treatment. Development plans for commercializing SCWO technology began in 1989; today, its vendor offers two engineering packages for small (5,000 gallons per day) and medium-sized plants (20,000 gallons per day).

In situ vitrification (ISV) units now exist on a variety of scales: bench, engineering, pilot, and large. ISV has been tested in the United States and Canada on various soil types, some of which contain dioxins. In bench-scale tests, ISV has been able to treat dioxin-contaminated soil to levels exceeding EPA's performance requirement (99.9999 destruction and removal efficiency (DRE)). Additional research is required, particularly on pilot and large scales, for gathering the data needed to further understand this technology and fully demonstrate its effectiveness in treating dioxin-contaminated materials. Support by the U.S. Department of Energy and the EPA have been essential to the development of this technology.

NONTHERMAL TREATMENT TECHNOLOGIES

The study and application of dechlorination dates back more than 70 years when it was first used for the commercial production of phenols. Only recently have scientists begun to look at dechlorination as a viable technology for treating dioxin-contaminated materials. Five of the dechlorination methods developed thus far are highly promising for dioxin destruction: KPEG[4], APEG-PLUS, base-catalyzed decomposition, thermal resorption/UV destruction, and thermal gas-phase reductive dechlorination, which combine dechlorination and incineration.

Pilot-scale tests with KPEG and APEG-PLUS have shown, with a certain degree of success, the ability of these processes to attain the cleanup levels required for dioxin-contaminated soil. Still, 'most pilot-scale applications of the KPEG technique have involved remediation of PCB-contaminated sites. The APEG-PLUS system, on the other hand, is currently available through full-scale mobile units capable of treating 40 tons of contaminated soil daily; several additional units are being constructed. Despite these developments, both KPEG and APEG-PLUS dechlorination treatment technologies have yet to be fully demonstrated for remediating dioxin-cont aminated sites.

Base-catalyzed decomposition (BCD), is a dechlorination process developed by EPA's Risk Reduction Engineering Laboratory as an alternative to KPEG and APEG-PLUS. The BCD process seems promising, not only in terms of dioxin destruction but also in terms of cost-effectiveness, because the costs of the reagents required are minimal compared to those of most dechlorination techniques. Early results from laboratory tests on dioxin-containing chlorinated materials indicate that BCD is a promising technology for the cleanup of dioxin-contaminated sites. Field demonstration tests are currently underway.

Thermal gas-phase reductive dechlorination was designed as a thermochemical reduction technology to treat a variety of contaminated matrices including harbor sediment, landfill leachate, and lagoon sludge. A full-scale reactor capable of treating 15 to 20 tons per day is now available, and a 50-ton-capacity unit is planned for 1992. Thus far, bench scale and laboratory-scale tests with various chlorinated compounds have been successful. Preliminary results from field tests in Canada also demonstrate the effectiveness of this technology in treating contaminated harbor sediments. Some consider this technology highly promising because of its

[4]Potassium Polyethylene Glicolate.

ability to chemically/thermally treat soil, liquid, and more importantly, sediment and sludge, which are considered by many to be the largest sources of dioxin contamination in the United States. At present, however, relatively few data to support this claim exist.

The thermal desorption/UV destruction (photolysis) process involves the use of heat to remove the dioxin from soil particles into a solvent solution for treatment. Once in the solvent, dioxin is exposed to ultra violet radiation and decomposed. In spite of its wide range of other uses, this technology has only been tested on a few military sites with dioxin-contaminated soils. Additional field testing and development is required before this technology could be selected for full-scale cleanup of dioxin-contaminated soils.

Bioremediation continues to be a promising technology over the long term for cleaning up dioxin-contamin ated sites. However, because of the limited research to date, most experts think that considerable work is required before bioremediation techniques can be applied successfully. A number of technical obstacles continue to limit the application of bioremediation: 1) only very specialized biological systems may be effective against the high toxicity, low volubility, and high absorptivity of dioxin; 2) a very stringent cleanup standard must be met; and 3) it may be difficult to find a microorganism that can effectively deactivate dioxins under the different conditions present at existing dioxin-contaminated sites. Experts still believe that these obstacles will be overcome by future achievements in biochemistry, the development of genetically engineered microorganisms, and increased knowledge of the chemistry of dioxin surrogates. Right now, bioremediation is regarded as an attractive possibility for cleaning up dioxin-contaminated soil, but its real applicability and effectiveness is unknown.

Soil washing is also considered an attractive approach because it can be employed to extract dioxin from soil and other contaminated materials for subsequent treatment by other technologies. Despite its recent introduction to the remediation field, at least two firms already offer soil washing techniques for the treatment of soils contaminated with organics, heavy metals, and even radionuclides. Soil washing promises to make remediation more cost-effective because its application would result in the need to chemically or thermally treat smaller volumes of contaminated materials. Unfortunately, data on the efficacy of this technique on dioxin-contaminated soil are scarce; and no full-scale soil washing system is currently available in the United States on a commercial basis for dioxin treatment.

Solidification and stabilization (S/S) techniques have been employed in the United States for more than two decades to treat certain liquid industrial chemical wastes. Earlier S/S techniques consisted of mixing two or more products (e.g., cement, lime, kiln dust, asphalt) to limit the volubility or mobility of contaminants in the medium, sometimes irrespective of the level of chemical reaction achieved. More recently, the application of S/S techniques has been expanded to include treatment of contaminated soil and incineration residues. Today, researchers are focusing on developing proprietary additives to increase the strength of the mixture; enhance the interaction between cement particles and contaminants; and alter the chemical structure of the contaminants.

Selection of S/S processes as the remediation treatment has occurred at several Superfund sites contaminated with organic waste and heavy metals. S/S techniques are commonly employed for stabilization of residues that result from the treatment of dioxin-contamin ated waste. Little information is available on the actual effectiveness of S/S technology for dioxin-contaminated material. In addition, none of the processes now available are considered by EPA to be an "alternative disposal method to incineration. If current research efforts continue, however, the future of S/S treatment may be more promising.

COST ESTIMATES OF DIOXIN TREATMENT

Developing reliable cost estimates for comparing technologies to treat dioxin-contaminated materials is difficult. Cleanup technology experts point out the following reasons for this: the limited number of proven technologies now available; the limited

[5]U.S. Environmental Protection Agency, office of Research and Development, Risk Reduction Engineering Laboratory, *International Waste Technolgies/Geo-Con In Situ Stabilization/Solidi ification—Applications Analysis Report, a* Superfund Innovative Technology Evaluation (SITE) report, EPA/540/A5-89/004 (Cincinnati, OH: August 1990), p. 20.

number of applications to date; the varying nature of contaminated materials and sites; and the different types of dioxins/furans found in these materials.

Experts also argue that in addition to operational factors, cost estimation of thermal and nonthermal technologies may be further complicated by the various regulatory (permitting) and technical factors that must be considered during site remediation. The most relevant examples of operational conditions that make cost estimation of thermal technologies difficult include the following:

1. throughput of the incineration system;
2. handling capacity required (the lower the handling capacity, the lower the labor costs);
3. term or duration of cleanup (the longer the term, the higher the cost);
4. caloric and moisture contents of the material to be treated, because these characteristics determine how much waste can be treated per day (the higher the heat and moisture contents, the higher the costs);
5. degree of contamination present in the waste, coupled with level of cleanup required (highly halogenated wastes are more costly because they are difficult to treat and require additional treatment and pollution control equipment);
6. costs incurred from purchasing electric power, fuel, oxygen, or reagents that are essential for operating the chosen technology; and
7. interruption of operations due to equipment malfunctioning, inclement weather, or lack of appropriate personnel.

Another important factor affecting dioxin incineration costs is the amount of reagent required to treat off-gases and residues resulting from the combustion of dioxin-contaminated materials. Costs incurred from improving incineration processes,[6] developing engineering designs for cleanup, transporting and setting up the equipment at a given location, and obtaining the necessary operating permits also make cost estimation of thermal technologies difficult.[7] Treatment depth (the deeper, the less costly because more soil can be treated) also affects the treatment costs for in situ vitrification.[8]

Although cost estimates are available for some of the thermal technologies examined in this paper, limited application of the technologies continues to hamper the development of more accurate cost figures. For example, the operating and maintenance costs of mobile rotary kiln incinerators, on the average, range from $400 to $600 per ton of dioxin-contaminated Soil.[9] This range, however, does not include costs incurred in transporting and setting up equipment, excavating soil, and disposing of treated material and residue. After these costs have been factored in, the total cost of mobile incineration could reach $1,500 per ton or more. No treatment costs exist for land-based rotary kiln incinerators because no stationary kiln has yet been permitted to incinerate dioxins.

The lack of meaningful and reliable cost estimates for rotary kiln incineration is also typical of most other thermal treatment technologies. In liquid injection incineration, for example, EPA reported in 1986 that treatment costs ranged from $200 per ton for halogenated solvents to $500 per ton for PCB-containing oils; the cost for dioxin-contaminated material was expected to be similar to that of PCBs.[10] More recent estimates, however, seem to indicate that the cost of treating dioxin-contaminated liquid waste could now exceed $1,500 per ton.[11]

The search for reliable, up-to-date dioxin treatment cost estimates for the remaining thermal technologies addressed in this paper yielded even more discouraging results. For instance, in the different applications of fluidized-bed incineration technology conducted to date, cost figures were available only for the treatment of chlorinated sludge and PCB-contaminated soil ($27 to $60 and

[6]ENSCO, for example, reported that improving the handling and particle removal capability of its mobile incinerators resulted in higher treatment costs.

[7]U.S. Environmental Protection Agency, Hazardous Waste Engineering Research Laboratory, *Treatment Technologies for Dioxin-Containing Wastes, EPA/600/2-86/096 (Cincinnati,* OH: USEPA, October 1986), p. 4.1.

[8]Geosafe Corp., "Application and Evaluation Considerations for In Situ Vitrification Technology: A Treatment Process for Destruction and/or Permanent Immobilization of Hazardous Materials," April 1989, pp. 13,28-29.

[9]Phillips, op. cit., footnote 2.

[10]U.S. Environmental Protection Agency, op. cit., footnote 7, p. 4.38.

[11]Paul E. des Rosiers, Chairman, Dioxin Disposal Advisory Group, U.S. Environmental Protection Agency, personal communication, June 10,1991.

$100 to $300 per ton, respectively[12]). Treatment costs of ***$365*** to ***$565*** per ton[13] were suggested for advanced electric reactor technology even though it has not been used since 1987. Preliminary estimates of treatment costs using infrared incineration technology are roughly $200 per ton of treated waste.[14] Relatively lower estimates ($60 to $225 per ton[15]) were estimated for supercritical water oxidation soil treatment; however, these calculations were made on the basis of bench-scale units. Finally, cost data for **in situ vitrification** of soil contaminated with dioxins do not exist at this time.[16]

The conditions that most commonly determine soil remediation costs for nonthermal treatment methods, such **as chemical dechlorination,** include:

1. the level of cleanup required;
2. the organic carbon content, moisture content, and particle size distribution of the soil;
3. the chemical forms (isomers) of chlorinated compounds present in the soil;
4. the temperature and duration of the chemical reaction;
5. the type of reagent formulation used; and
6. the length of time during which contaminated soil is exposed to the reagents.

These factors, as well as the recyclability of reagents and the cleanup level required, greatly affect total remediation costs.[17]

Of the dechlorination methods addressed, only the KPEG and APEG-PLUS processes seems to offer cost information, although with the same degree of uncertainty as thermal technologies.

Based on hypothetical scenarios developed by Galson Remediation Corp. and EPA, KPEG treatment costs are estimated to range from $91 in batch systems to about $300 for in situ applications.[18] More recently, based on the dechlorination of PCB-contaminated soil at the Wide Beach Superfund site, New York, Canonie Environmental officials suggested that treatment costs for dioxin-contaminated soil may range from $250 to $350 per ton.[19]

According to existing data, the processing costs of PCB-contaminated soil using APEG-PLUS have been estimated to be about $800 per ton. Based on the similarities between PCB and dioxins, experts suggest that the costs of APEG-PLUS treatment of dioxins may be somewhat higher.

Developers of **base-catalyzed decomposition** claim that dioxin treatment costs for this technology will be lower than those of alcohol-based dechlorination processes (KPEG, APEG-PLUS) because this technology employs cheaper reagents and eliminates the need to use costly polyethylene glycol as a component. The developer has estimated that the application of base-catalyzed decomposition to dioxin-contaminated soil would cost about $245 per ton.[20]

Developers of **thermal gas-phase reductive dechlorination** claim that operating costs associated with this technology will be three to five times cheaper than incineration. If proven, such processing costs for dioxin-contaminated soil or sediment could range between $350 and $500 per ton. No post-treatment and transportation costs need to be added

---

[12]U.S. Environmental protection Agency, op. cit., footnote 7, p. 4.51; Brenda M. Anderson and Robert G. Wilbourn, Ogden Environmental Services, "Contaminated Soil Remediation by Circulating Bed Combustion: Demonstration Test Results," November 1989, p. 7; Sharin Sexton, Ogden Environmental Services, Inc., San Diego, CA, personal communication, Jan. 25, 1991.

[13]Jim Boyd, J.M. Huber Corp., Huber, TX, personal communication, Jan. 25, 1991.

[14]U.S. Environmental Protection Agency, op. Cit., footnote 7, p. 4.64.

[15]Brian G. Evans, P.E., Development Manager, ABB Lummus Crest, Inc., personal communication, Apr. 2, 1991; Terry B. Thomason et d., "The MODAR Supercritical Water Oxidation Process," paper submitted for publication to *Innovative Hazardous Waste Treatment Technology Series, Nov. 3, 1988,* p. 22. This paper was found in MODAR, Inc., *MODAR Information, an* undated company report.

[16]Geosafe Corp., op. cit., footnote 8, pp. 13,28-29.

[17]Paul E. des Rosiers, "Chemical Detoxification of Dioxin-Contaminated Wastes Using Potassium Polyethylene Glycolate," *Chemosphere,* vol. 18, No. 1-6, 1989, p. 351; and U.S. Environmental Protection Agency, op. cit., footnote 1, p, 5.12.

[18]U.S. Environmental protection Agency, op. cit., footnote 7, pp. 5.12-5.13.

[19]Alister Montgomery, Canonie Environmental me., personal communication, Mar. 20, 1991.

[20]Charles Rogers, Us. Environmental Protection Agency, Risk Reduction Engineering Laboratory, personal communication, Dec. 17, 1990.

because no contaminated residues remain after processing.[21]

In addition to conditions affecting soil remediation costs for the chemical dechlorination methods described earlier, treatment costs for **bioremediation methods are** also affected by the nature (high acute toxicity, low volubility) and distribution (generally very low concentrations) of dioxins in soils. At present, no cost data are available for **bioremediation** of dioxin-centaminated soil. One significant reason for this is that no field testing has been conducted to date; treatment of chlorinated dibenzo-p-dioxins was demonstrated only on a bench scale in '1985.

At present, no cost data are available for dioxin treatment by soil washing. The relatively recent introduction of soil washing techniques to the hazardous waste remediation field is the primary reason for the unavailability of cost estimates, as well as for the lack of information on the performance of this technology on a large scale. Developing such information may take some time because the processes now available have yet to be considered for evaluation at a dioxin-contaminated site.

Developing cost estimates for **solidification/stabilization** technologies has thus far been extremely difficult because their application has been limited to a few laboratory studies or sites. The few data available on dioxin treatment also make cost comparisons between batch processes (which require excavation, treatment, and redisposal of soil) and in situ processes difficult. For instance, a study conducted in 1987 identified and evaluated" the potential applicability and costs of several S/S technologies at three dioxin-contaminated sites in eastern Missouri;[22] however, additional in-depth studies on their long-term performance were suggested.[23] Although not specifically developed for treatment of dioxin or its residues, costs for the application of certain S/S methods are projected to range somewhere between $110 and $200 per ton of soil.

---

[21] D.J. Hallett and K.R. Campbell, "Thermal Gas-Phase Reduction of Organic Hazardous Wastes in Aqueous Matrices," U.S. Environmental Protection Agency Abstract Proceedings: Second Forum on Innovative Hazardous Waste Treatment Technologies: Domestic and International—Philadelphia, PA, May 15-17, 1990, Superfund EPA/500/2-90/009; D.J. Hallett and K.R. Campbell, "Demonstration Testing of a Thermal Gas Phase Reduction Process," U.S. Environmental Protection Agency, proceedings of the Third Forum on Innovative Hazardous Waste Treatment Technologies: Domestic and International, June 11-13, 1991, Dallas, TX, in press.

[22] Treatment CONS estimated during this study ranged from $5 to $10 per cubic meter for emulsified asphalt to $11 to $13 per cubic meter for Portland cement.

[23] Paul E. des Rosiers, ''Evaluation of Technology for Wastes and Soils Contaminated With Dioxins, Furans, and Related Substances,' *Journal of Hazardous Materials,* vol. 14, No. 1, 1987, pp. 121-122.

Appendix A
Summary of the Cleanup at Times Beach

There are 27 contaminated residential and farming areas in eastern Missouri, of which Times Beach is the largest. At all sites, including Times Beach, the cleanup process selected consists of the removal of contaminated soil to a thermal treatment facility at Times Beach. Removal of contaminated soil has already been accomplished at sites (excluding Times Beach) posing the highest health risks. Removal operations consisted of digging, bagging[1], and storing the dioxin-contaminated soil in nearby steel-sided storage structures. The Missouri Department of Natural Resources (MDNR) established a monitoring program to inspect these storage areas periodically.

Contaminated soil still remains in place at Times Beach. In 1983, the Environmental Protection Agency (EPA) and MDNR purchased Times Beach and permanently relocated its residents because of: 1) the unavailability of demonstrated technologies to clean up the contaminated soils when the Centers for Disease Control recommended the evaluation of residents' health; and 2) the uncertainty about how long Times Beach residents would have to be temporarily relocated. The title to the land now held by a trustee of the State of Missouri will be transferred to the State once all land has been purchased.

The decision to employ incineration as a remedial technology stipulated in EPA's Record of Decision of September 1988 is based on the Agency's Feasibility Study.[2] In response to the limited knowledge available on incineration (no facilities in the United States were permitted to incinerate dioxin), EPA carried out a research project at Denney Farm in southwest Missouri (see ch. 2). The mobile, rotary kiln incinerator facility used for the test was successful in destroying the dioxin-contaminated liquids and soils taken from 8 of the 48 dioxin-contaminated sites identified in the State. EPA now requires that incineration of dioxin-containing soil at Times Beach be consistent with the engineering and performance parameters and emission levels obtained at Denney Farm (at least 99.9999 percent 2,3,7,8-tetrachlorodibenzo-p-dioxin destruction and removal efficiency (DRE)).

The MDNR has also been an active participant in the cleanup process by providing opportunities for the proponents of alternative dioxin treatment methods to demonstrate the effectiveness of their techniques. Among the technologies reviewed were bioremediation, reactive dechlorination, shipment of soil out of State (this option was found to cost at least $22 million more than incineration), and rotary kiln incineration under two scenarios (treatment at a central area or at five different locations). Only incineration was found to be suitable. After evaluating incineration treatment at five different locations, MDNR concluded that such an option would:

1. cost nearly $40 million more than incineration at a central location,
2. require large open areas for siting the incinerator (a requirement impossible to satisfy at many small dioxin-contaminated sites), and
3. probably expose a larger portion of the population to dioxin.

As a result of these findings, MDNR supported the EPA decision to locate the incinerator at Tim&-Beach, as long as it was a nonpermanent facility used to treat only dioxin-contaminated soil from the State of Missouri.

On July 20, 1990, as a result of a lawsuit filed against it by EPA and the State of Missouri, Syntex Agribusiness Inc. signed a Consent Order with EPA and two State agencies, the Attorney General's Office and the Department of Natural Resources.[4] In the agreement approved by the Court, Syntex Agribusiness Inc. is a responsible party for the Times Beach cleanup because it owned the Verona, Missouri, chemical manufacturing plant from which the dioxin-contaminated oils used at Times Beach originated. Under the signed agreement, Syntex Agribusiness is responsible for paying and carrying out the cleanup (soil excavation, incineration) at Times Beach as well for incineration of the dioxin-contaminated soil from 26 other Eastern Missouri sites. EPA is responsible for overseeing and financing the excavation and transport of soil from these sites, 23 of which are located within a 30-mile-radius of Times Beach. Upon satisfactory treatment, the nonhazardous residues or ash will be buried at the site and covered with topsoil. Although the incinerator is expected to be in operation at the site for 3 to 5 years, 7 to 10 years will be required for the Times Beach site to be considered adequate for public recreational use. Construction of

[1]Soils were poured into 1.3 cubic yard double-ply, woven, polypropylene sacks (called "Supersacks") or bags.

[2]U.S. Environmental Protection Agency, Office of Emergency and Remedial Response, *Superfund Record of Decision: Times Beach, MO,* EPA/ROD/R07-88/015 (Washington, *DC:* September 1988).

[3]A standard for the thermal treatment of all highly toxic compounds regulated under the Resource Conservation and Recovery Act.

[4]*United States* v. *Bliss* et *al.*, Civil Action No. 84-200 C (i), et al. (E.D. Mo.), consent decree entered July 20, 1990.

houses, however, is not practical because Times Beach is located in a floodplain.[5]

Of the $118 million estimated for the Times Beach cleanup, Syntex Agribusiness is expected to pay about $100 million and the State of Missouri nearly $1 million. The remaining $17 million will be provided by EPA.[6] Before incinerating any dioxin-contaminated soil, however, Syntex will have to apply for an operating permit under the Resource Conservation and Recovery Act to handle the waste and operate the incinerator. The permit will be administered by the State and is expected to: 1) limit operations to 5 years, 2) limit waste to dioxin-contaminated soil, and 3) prohibit the incineration of out-of-State waste. To operate the incinerator, Syntex Agribusiness is also required to obtain two additional permits: an Air Pollution Control permit from the St. Louis County Health Department for the control of incinerator emissions and a National Pollutant Discharge Elimination System permit from the Department of Natural Resources for the control of wastewater discharges.[7]

At present, Syntex Agribusiness is inviting companies with incineration technology capability (e.g., rotary kiln, circulating bed combustion) to submit contract proposals. Thus far, public opposition to incineration has centered on plans that call for shipping dioxin-contaminated soil from 26 other contaminated areas to Times Beach for incineration. One of the reasons for opposing incineration appears to be that once the incinerator facility is installed, the public fears it will attract further transport of dioxin-contaminated soils to Times Beach.

[5]Missouri Department of Natural Resources, "Restoring Times Beach: Questions and Answers About Eastern Missouri Dioxin Cleanup," undated; Linda James, Missouri Department of Natural Resources, personal communication% Dec. 5, 1990 and Sept. 12, 1991.

[6]Ibid.

[7]Missouri Department of Natural Resources, op. cit., footnote 5.