Copyright and Home Copying: Technology Challenges the Law

October 1989

NTIS order #PB90-151309
GPO stock #052-003-01169-7

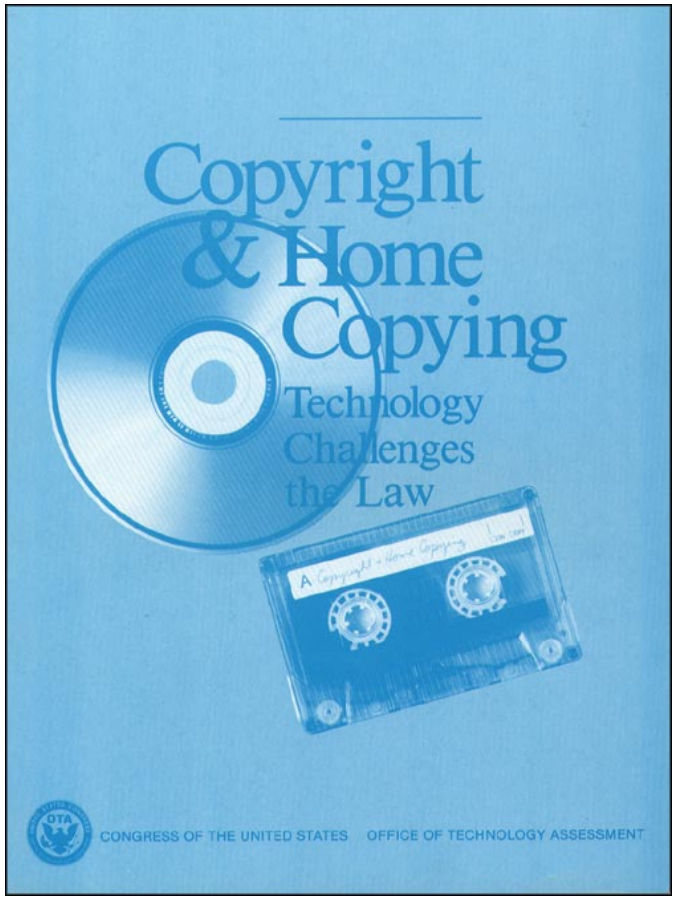

Recommended Citation:

U.S. Congress, Office of Technology Assessment, *Copyright and* Home Copying: Technology Challenges *the Law*, OTA-CIT-422 (Washington, DC: U.S. Government Printing Office, October 1989).

Library of Congress Catalog Card Number 89-600714

For sale by the Superintendent of Documents
U.S. Government Printing Office, Washington, DC 20402-9325
(Order form can be found in the back of this report)

Foreword

Today's consumer electronics allow the average citizen to make very good copies of recorded music, television shows, movies, and other copyrighted works for private use at home. Soon, as digital recording equipment comes into widespread use, homemade copies will not just be very good—they can be perfect reproductions of the originals. Home copying *is* becoming much more common; for instance, the proportion of people who make home audiotapes has doubled in the last 10 years. Copyright owners are concerned, and claim that home copying displaces sales and undermines the economic viability of their industries. They fear that the ability to make perfect copies will increase home copying even more.

This report first examines home recording technologies. Then—focusing primarily on audiotaping—we examine the ambiguous legal status of home copying. Our report considers the economic effects that home audiotaping may have on the recording industry, contrasted to the effects that restricting home taping might have on consumers. Finally, we identify a range of actions that either Congress or the industry might pursue.

Included in our report are the results of a national survey of home taping and copying behavior conducted for OTA in the autumn of 1988. In this survey, 1,500 members of the public responded to a range of questions about their own audio- and video-taping behaviors and their attitudes toward various policy approaches related to home taping. The Subcommittee on Courts, Intellectual Property and the Administration of Justice of the House Committee on the Judiciary and the Subcommittee on Patents, Copyrights and Trademarks of the Senate Committee on the Judiciary initially requested the report. This request was joined by the Ranking Minority of the House Committee on the Judiciary. Interest in the study was also expressed in a letter from the Chairman of the House Committee on Energy and Commerce and the Chairman of the Subcommittee on Commerce, Consumer Protection and Competitiveness of the House Committee on Energy and Commerce.

OTA appreciates the participation of the advisory panel, survey working group, Federal agency officials, and interested citizens without whose help this report would not have been possible. The report itself, however, is the sole responsibility of OTA, not of those who so ably assisted us in the assessment and its critical review, or of the congressional committees who requested or endorsed the undertaking of the study.



JOHN H. GIBBONS
Director

Copyright and Home Copying Advisory Panel

Robert W. Crandall (Chairman)
Senior Fellow, Economic Studies Program
The Brookings Institute

Jason S. Berman
President
Recording Industry Association of America

Brenda Dervin
Chairman
Department of Communications
Ohio State University

David Fishman
Senior Staff Consultant
Arthur D. Little, Inc.

Jack Golodner
Director
Department of Professional Employees
AFL-CIO

Michael H. Hammer
Director
Communications Policy Development
Time Incorporated

Glen H. Hoptman
Editor-in-Chief, Optical Publishing
Smithsonian Institution

Judith K. Larsen
Director of Primary Research
Dataquest

Judith Lichtenberg
Research Scholar
Center for Philosophy and Public Policy
University of Maryland

William Livingstone
Contributing Editor
Stereo Review Magazine

Peter Menell
Associate Professor of Law
Georgetown University Law Center

David Mouon
Chairman
Music Production and Engineering
Berklee College of Music

Peter Rothbart
Assistant Professor of Electronic Music
Ithaca College School of Music

Gary J. Shapiro
Staff Vice President
Government and Legal Affairs
Consumer Electronics Group
Electronic Industries Association

Mark Silbergeld
Director of Washington Office
Consumers Union

Russell M. Solomon
President
MTS, Inc.

Patrick A. Weber
Director/R&D
MCA Records

NOTE: OTA appreciates and is grateful for the valuable assistance and thoughtful critiques provided by the advisory panel members. The panel does not, however, necessarily approve, disapprove, or endorse this report. OTA assumes full responsibility for the report and the accuracy of its contents.

OTA Project Staff–Copyright and Home Copying

John Andelin, *Assistant Director, OTA*
Science, Information, and Natural Resources Division

James W. Curlin, *Program Manager*[1]
Communication and Information Technologies Program

Fred W. Weingarten, *Program Manager*[2]
Communication and Information Technologies Program

Project Staff

Joan D. Winston, *Project Director*[3]
Karen G. Bandy, *Analyst*[1]
Mark Nadel, *Analyst*[1]
Darlene Wong, *Research Analyst*

Congressional Research Service Contributor

Douglas R. Weimer
American Law Division

Administrative Staff

Elizabeth Emanuel, *Administrative Assistant*
Karolyn Swauger, *Secretary*
Jo Anne Price, *Secretary*

1 As of 4/89
2 Senior Associate as of 1/89
3As of 8/88
4 Project Director 2/88-8/88, on leave 8/88-12/88
5 As of 3/89

Survey Working Group

Brenda Dervin
Chairman
Department of Communications
Ohio State University

Martin Fishbein
Department of Psychology
University of Illinois

Judith Larsen
Director of Primary Research
Dataquest

Mark Levy
Professor
College of Journalism
University of Maryland

Lewis Lipnick
Principal
Your Silent Partner

Steve MacGregor
Vice President
Diagnostic Research, Inc.

Robert Schwartz
Attorney
McDermott, Will & Emery

Philip Wirtz
Associate Professor
Department of Management Science
George Washington University

Reviewers and Contributors

Robbin Ahrold
Broadcast Music, Inc.

Joe Alen
Copyright Clearance Center

David E. Altschul
Warner Bros. Records, Inc.

Wilhelmus Andriessen
Conseil Europeen de l'Industrie de la Bande Magnetique

Russ Bach
CEMA - Capitol Records

Lew Bachman
The Songwriters Guild

James Barrett
Barrett's Audio & Video

James A. Berkovec
University of Virginia

Paul Berry
Canadian Musical Reproduction Rights Agency Limited

Peter Beruk
Software Publishers Association

Stan Besen
Columbia University

Marv Bornstein
A&M Records

Timothy J. Brennan
George Washington University

Yvonne Burckhardt
International Federation of Musicians

Robert Cassler
Copyright Royalty Tribunal

Ralph E. Cousino
Capitol Industries EMI, Inc.

Michael Cover
Recording Industry Association of America, Inc.

Paula Cranston
SESAC, Inc.

Jeff Cunard
Debevoise & Plimpton

Linda B. Cutler
Eidak Corp.

Donald P. Dulchinos
National Cable Television Association

Joe Finney
National Center for Health Statistics

Ronald Freed
Music Publishers' Association of the U.S.

Ray Gianchetti
National Association of Recording Merchandisers

James L. Goldberg
Abram, Westermeier, Goldberg, P.C.
National Association of Retail Dealers of America

Michael Greene
National Academy of Recording Arts and Sciences

Jill Grisco
The Washington Post

Michael Grubbs
Tandy Electronics

Dan Hochvert
NYNEX

Brad Kingsbury
Peter Norton Computing, Inc.

David E. Kronemyer
Capitol Records, Inc.

Stan Liebowitz
Department of Economics and Business
North Carolina State University

Sandra Lockhart
Car Audio Specialists Association

John W. Lyons
National Institute of Standards and Technology

Frannie Martis
MTS, Inc.

James Massey
National Center for Health Statistics

John T. McGuire
Screen Actors Guild

Al McPherson
Warner Bros, Records, Inc.

Gloria Messinger
American Society of Composers, Authors, and Publishers

Edward D. Murphy
Harry Fox Agency

Dave Newberg
Capitol Records

Ian Novos
University of Southern California

Continued on next page

Kevin Odegard
National Association of Songwriters

Joseph Oldham
Popular Mechanics

Edwin Outwater
Warner Bros. Records, Inc.

Marybeth Peters
Office of the Registrar
U.S. Copyright Office

Skip Pizzi
National Public Radio

David Pushic
Optical Disc Mastering

Helen Rena
Legal Department
American Federation of Musicians

Irene Robadey
International Secretariat of Arts, Communications Media and Entertainment Trade Unions–FIET

Hilary B. Rosen
Recording Industry Association of America, Inc.

Garth Saloner
Sloan School of Management
Massachusetts Institute of Technology

David Sappington
Bell Communications Research

Erich Schulze
GEMA

Eric Schwartz
U.S. Copyright Office

Steven Schwartz
Music Distribution Service

Molly Seagrave
International Cablecasting Technologies

Carl Shapiro
Woodrow Wilson School
Princeton University

Cary H. Sherman
Arnold & Porter

Rick Shoemaker
MCA Music

Gregory Sidak
Federal Communications Commission

Cathy Slesinger
NYNEX

Ken Small
University of California at Irvine

David Stebbings
CBS Records Technology Group

Jeffrey M. Sydney
Polygram Records

Doug Talley
Digital Radio Labortories, Inc.

Ana Thorne
Peter Norton Computing

Jean Loup Tournier
SACEM/SDRM

Kenneth Train
Cambridge Systematic

Harold Vogel
Merrill Lynch Capital Markets

Michael Waldman
University of California at Los Angeles

Howard L. Wattenberg
Marshall Morris Wattenberg & Platt

George David Weiss
The Songwriters Guild

Clifford Winston
The Brookings Institution

Sanford Wolff
American Guild of Musical Artists

Contractors

John Boyle, Principal Investigator
Schulman, Ronca, & Bucavalas, Inc.

William Johnson
University of Virginia
Michael Katz

University of California at Berkeley

Fred Mannering
University of Washington

Ian Novos
University of Southern California

Carl Shapiro
Princeton University

Leigh Tripoli
Editor

Referees **for Economic Analyses**

James A. Berkovec
University of Virginia

Stan Liebowitz
North Carolina State University

Garth Saloner
Massachusetts Institute of Technology

David Sappington
Bell Communications Research

Ken Small
University of California at Irvine

Kenneth Train
Cambridge Systematic, Inc.

Michael Waldman
University of California at Los Angeles

Contents

Page

Chapter l. Summary, Issues and Options 3

Chapter 2. Technological Change and Home Copying. 37

Chapter 3. Legal Aspects of Copyright and Home Copying. 65

Chapter ***4.*** An Overview of the U.S. Record Industry. 91

Chapter 5. Copyright Royalties for Music and Sound Recordings. 103

Chapter 6. The OTA Survey. 139

Chapter 7. Economic Perspectives on Home Copying. 169

Appendix A. Survey Development and Review. 211

Appendix B. Survey Questionnaire. 217

Appendix C. OTA Survey Tables. 253

Appendix D. List of Contractor Reports. 293

Chapter 1

Summary, Issues and Options

CONTENTS

Page

SUMMARY 3
Reasons for Concern 3
Contested Issues 5
Congressional Role 14
POLICY CHOICES AND OPTIONS 14
Introduction 14
Fundamental Copyright Policy Questions 16
Choices for Congress 17
Policy Options 20
CONSIDERATIONS FOR POLICY IMPLEMENTATION 21
Distinguishing Among Types of Home Copying 21
Technological Copy Protections 23
Compulsory Licenses 26

Boxes

Box — Page

1-A Questions Concerning Artists' Rights and Private Use 17
l-B. Industry Agreements and Antitrust 19
l-C. Attributes and Uses of Home Copies 22
l-D. Parameters of Home Copying 24
l-E. Industry Agreement Concerning DAT 28

SUMMARY

Reasons for Concern

A 1988 OTA survey found that 4 in 10 of a nationally representative sample of Americans over the age of ten had taped recorded music in the past year. The survey results showed that Americans tape-record individual musical pieces over 1 billion times per year. Much of this home audiotaping was for the purpose of copying music from records or compact discs to audiocassettes to be played in the car or in portable cassette players. OTA found that the public–those who had taped and those who had not—believe it is acceptable to copy recorded music for one's own use or to give to a friend as long as the copies are not sold.

But copyright owners of music and sound recordings consider home audiotaping to be a problem. They believe that taping cuts into sales of prerecorded music and reduces royalty payments to songwriters, music publishers, and performing artists. Recent advances in audio-recording technology have made it easier to make high-quality home copies.

In 1986, Japanese and European manufacturers announced their intention to market consumer-model digital audiotape (DAT) recorders in the United States. DAT technology represents a significant advance over conventional, analog tape recorders. The sound quality of DAT recordings is superior, and DAT recorders can produce copy after copy with virtually no degradation in fidelity. The debate concerning DAT and its impact on home copying is one of a growing number of copyright issues identified in a 1986 OTA report on intellectual property.[2]

Since enactment of the Copyright Act of 1976, over 400 bills have been introduced in Congress to change the copyright law; many of these attempted to deal with a growing range of copyright issues related to technology. For example, computer software, semiconductor chips, privately owned satellite dishes, online databases, and audio- and video-cassette recorders, have all prompted a variety of proposals to deal with what copyright proprietors perceive as not only piracy of their intellectual property but an undermining of their economic viability.

Digital representations of music, video, and other types of information and entertainment for home use cause copyright owners the most concern (see ch. ***2).*** Although some current consumer-model analog audiotape recorders can produce very high-quality copies (especially from compact discs), the quality of successive generations of copies degrades rather quickly. But digital recorders, such as DAT equipment or the forthcoming erasable/recordable compact disc technology, enable the public to make successive generations of virtually perfect copies.

Music in digital form can be easily edited and manipulated, and the music can be copied and stored on a number of different media — tape, computer disk, compact disc, etc. Special, error-correction circuitry can make physical imperfections in the recording, like

---

1A royalty is a payment made to a copyright holder or performer for the use of his property. Copyright in the musical composition is usually held by the songwriters/composer and music publisher. Recording companies pay "mechanical" royalties to copyright owners of musical compositions based on the number of recordings sold. Copyright in the sound recording is usually held by the recording company. Recording companies earn revenues from the sale of a recording and pay recording artists their royalties from these revenues (see ch. 5 for a discussion of royalties for music and sound recordings).

2U.S. Congress, Office of Technology Assessment, ***Intellectual Property Rights in an Age of Electronics and Information***, OTA-CIT-302 (Melbourne, FL: Kreiger Publishing Co., April 1986).

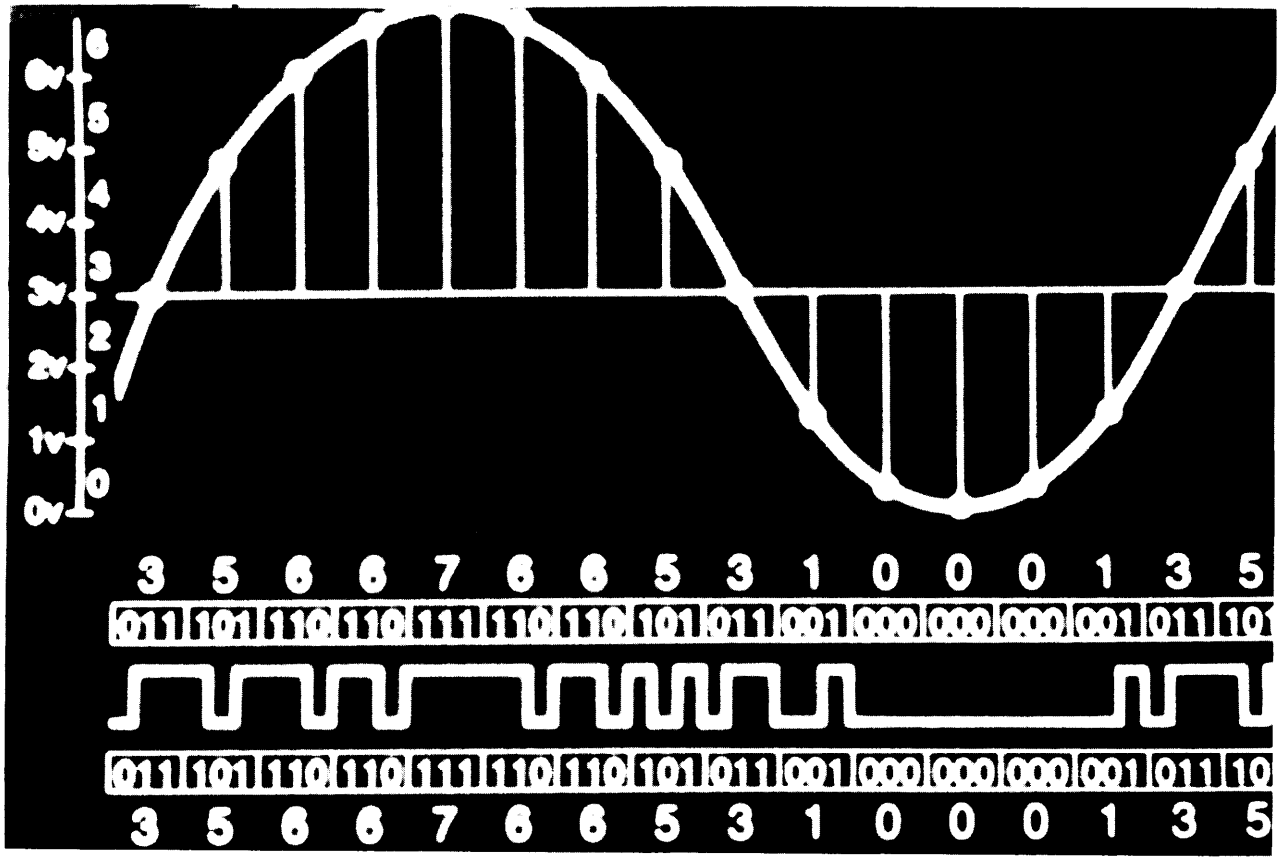

Photo Credit: Optical Disc Mastering

Analog information can be coded as a series of ones and zeros.

dust or scratches, imperceptible during playback. Digital representations offer advantages to consumers, but many copyright holders are concerned that convenient, consumer-model digital recorders will greatly encourage home copying, and many recording companies, songwriters, and music publishers fear that digital audio copying will greatly reduce sales and royalties.

The primary focus of this study is home audiotaping. In it, we examine the nature and extent of home audiotaping and consider the impacts it may have on recording-industry revenues, contrasted with consumer impacts should home copying be restricted. We also briefly examine current home videotaping practices. This report looks beyond near-term potential impacts of DAT to an intellectual property concept called *private use*, of which home copying is one kind,[3] and to technological trends that will become the basis for future debates over personal use of copyrighted material.

[3]Examples of private use include "time-shifting" videotaping from television, copying a magazine article, or making home audiotapes from broadcast or prerecorded material. (See ch. 2 for a discussion of technological change and private use and ch. 3 for a legal discussion of home copying and other private uses; see also ibid., pp. 193-201.)

Contested Issues

Legal Status of Home Copying

Goals of Copyright –American copyright is sanctioned by the Constitution as a form of protection for authors against unauthorized copying of "original works of authorship. "[4] The copyright proprietor is given the exclusive right to use and to authorize various uses of the copyrighted work: reproduction, "derivative use)" distribution, performance, and display. Violation of any of the copyright owner's rights may result in an infringement-of-copyright action. The copyright owner's rights in the work are neither absolute nor unlimited in scope, however. For instance, the duration of copyright is limited (e.g., the life of the author plus an additional 50 years, or 75 years for a work "made for hire").

Copyright was developed for the promotion of intellectual pursuits and public knowledge, primarily for the benefit of the public at large.[5] Benefits accrue to the public from the creativity of authors, and the limited monopoly granted authors is a stimulant to ensure that creativity. *Without a public benefit arising from the copyright system, the grant of a monopoly would not rejustifiable.* Thus, there is a balance between the rights of copy-right proprietors and the rights of the public. Arguments that equate copyright with royalty income run counter to this concept and appear to be inconsistent with the intent of the Framers of the Constitution.

Legal Status **of Home Copying as Private *Use-In*** *this report, OTA defines "home copying" (of* **copyrighted materials) as** *an essentially private, noncommercial activity, so that "home copies" includes copies shared with or given to friends, but not homemade copies that are bought or sold.* This definition is consistent with the definition of private use in the 1986 OTA report on intellectual property.[6]

Thus, home copies are used privately within the household (including personal vehicles) and are not used for implicit or explicit commercial purposes. Admission is not charged and users are a household and its normal circle of friends, rather than the public. "Homemade" copies that were subsequently used for commercial purposes or public performances would not be considered home copies. *This definition appears to be in line with public opinion.* Private use is sometimes referred to colloquially as '(personal use," "private copying, " or "home use. " In this report, OTA uses "home copying' to refer to one form of private use.

The problem of private use arises because its legal status is ambiguous. *Current legislation and case law offer meager guidance as to whether copyright proprietors' rights extend over private use.*[7] While language in the House Report[8] accompanying the 1971 Sound Recordings Amendment to the (former) copyright law made it clear that Congress intended

[4] 17 U. S. C., sees. 102, *et seq. (* 1982)

[5] A fundamental goal of copyright is to promote the public interest and knowledge – the "Progress of Science and the useful Ms. " (U.S. Constitution, Art. I, sec. 8, cl. 8.) A directly related objective is t he promotion and the dissemination Of knowledge to t he public.

[6] The 1986 OTA report defined *private use* as "the unauthorized, uncompensated, noncommercial, and noncompetitive use of a copyrighted work by an individual who is a purchaser or user of that work. " Here "use" includes copying and "unauthorized" does not necessarily mean "illegal" – it means" without consent. " "Noncompetitive" means that the fruits of private use are not sold commercially. (OTA-CIT-302, op. cit., footnote 2, p. 194.)

[7] Although U.S courts have been called on t. resolve some aspects of home use of videocassette recorders, these decisions have been relatively narrow in scope and have applied the fair-use doctrine, absent other statutory guidance. OTA considers that in light of its ambiguous legal status, applying the fair-use doctrine to private use is premature (see the section on fair use that follows).

[8] U.S. Congress, House Committee on th, Judiciary, *Sound* R$_{em}$& *ings: Report Accompanying S.646*, serial No. 92-487, September 1971, p. 7.

to permit home audiotaping for private use, the absence of such language in the 1976 law allows alternate opinions about congressional intent (see ch. 3). The Recording Industry Association of America, Inc. (RI-M), for instance, considers that the 1971 amendment was made irrelevant by the "general overhaul" in the Copyright Act of 1976.[10] The Electronic Industries Association (EIA), on the other hand, considers that the 1976 legislation did nothing to negate "the principle that home taping from broadcasts or prerecorded materials was not an infringement [of copyright]. "[11]

Fair Use and Home Copying– Some uses of copyrighted works, such ascertain copying for the purposes of criticism, news reporting, research, teaching, or scholarship, are "fair uses,') not copyright infringements. Fair use is a defense to a claim of copyright infringement that is codified in the 1976 Copyright Act and interpreted by the courts. Courts determine whether an instance of copying is "fair use" by taking into account the purpose and character of the copying, the amount and extent of the work copied, the nature of the original work, and the effect of the copying on the potential market for or value of the work. [12] *Many consider the doctrine of fair use to be the "safety valve" of copyright law and sufficiently adaptable to deal with home copying and other consequences of technological change.*

Even though the EIA (for example) maintains that the current legality of home copying does not depend on the doctrine of fair use, it considers the concept of fair use as adequate to deal with home copying, so that additional legislation making its legal status more explicit is not needed.[13] The recording industry, on the other hand, considers that home copying is an infringement under the current law and that, in the face of "massive sales displacement and loss of revenues," legislation for additional enforcement is needed to make copyright protection "more than an empty right."[14]

General application of the fair-use doctrine to home copying may be premature because home copying is a private use and the legal status of private use is ambiguous.

Absent other statutory guidance, however, fair use has been applied to legal cases involving home copying. American courts have examined home copying with videocassette recorders (VCRs). In 1984, after a series of conflicting lower court judgments, the Supreme Court determined that under certain circumstances, the taping of a video work in its entirety for watching later would be allowable under the doctrine of fair use. The scope of the Supreme Court's holding was expressly limited to home video recording of over-the-air, commercial broadcasting for time-shifting purposes. The holding did not address the taping of cable or pay television, or the issue of "library building" of recorded programs.[15]

---

[9]U.S. Congress, House Committee on the Judiciary, ***Report Accompanying S.22,*** Serial No. 94-1476 September 1976.

[10]H. Rosen, RIAA, letter to J. Winston, OTA, May 2, 1989 (enclosure with comments on draft ch. 5, p. 2). RIAA's membership includes the major U.S. recording companies.

[11]Gary J. Shapiro, EIA, letter to D. Weimer c/o OTA with comments on draft ch. 5, Apr. 28, 1989, p. 3. EIA's membership includes consumer-electronics and blank-tape manufacturers.

[12]Criteria to be considered by the courts in determining whether a claimed infringement is actually a "fair use" are given in Sec. 107 of the Copyright Act of 1976 (Title 17 U. S.C.). The Act specifies other limitations on exclusive rights of copyright holders.

[13]Gary J. Shapiro, EIA, letter to D. Weimer with comments on draft ch. 5, Apr. 28, 1989, pp. 1, 4-5.

[14]H. Rosen, RIAA, letter to J. Winston, OTA, May 2, 1989 (enclosure with comments on draft ch. 8, pp. 1-2; enclosure with comm on draft ch. 9, p. 1).

[15]*Universal City Studios, Inc.* v. *Sony Corp. of America,* 480 F. Supp. 429 (D. C. Cal. 1979), *rev'd,* 659 F. 2d 963 (9th Cir. 1981), *rev'd,* 464 Us. 417 (1984).

Copyright and New Technologies

New Technologies and the Goals of Copyright--All U.S. copyright law, including the Copyright Act of 1976, proceeds on the assumption that effective and efficient copying is a large-scale, publicly visible, commercial activity, and therefore, that legal prohibitions against unauthorized copying are enforceable. This assumption, which was valid 20 years ago, is being seriously challenged today because technology provides consumers with the capabilities to be printer/publisher, on a smaller, less-visible scale.

As defined in this report, private use– such as home copying– differs from commercial piracy in that the copies are not sold commercially. But copyright proprietors now argue that the aggregate economic effect of individuals' private use is equivalent to commercial piracy. **16** They claim that private uses, like home audiotaping, deprive copyright owners of revenues, reduce incentives to create and disseminate new creative works, and discourage newcomers from entering creative professions. Representatives of the recording industry, for example, hold that home taping of prerecorded or broadcast music frequently displaces sales of records, prerecorded cassettes, and CDs, and thereby reduces their revenues. In turn, they argue, this reduces the number and variety of works they find profitable to produce and distribute, so that stakeholders — including performers, studio musicians, songwriters, and music publishers— are deprived of earnings. Moreover, some claim that the greatest harm from home audiotaping falls on new artists and songwriters, and on those in less popular genres (like classical music), so that diversity is substantially reduced. They also claim that home copying reduces incentives to enter or stay in creative fields like music or songwriting, and limits the pool of new talent.[17]

Representatives of the consumer-electronics industry and advocates of home audiotaping challenge these claims by asserting that home taping does not necessarily undermine the Copyright Act's intended balance between the rights of proprietors and the rights of the public. They argue that home taping can stimulate sales of recorded music by increasing interest in music generally and by broadening the market for recorded music. Moreover, they contend that the linkages between industry revenues/royalties and creative incentives are complex, and that restricting home taping would not necessarily result in more employment in the arts or more variety and widespread dissemination of creative works. **18**

New Technologies and the Boundaries of Copyright-New *uses of technology can exploit persistent ambiguities in existing laws. Sometimes this can have the effect of lawmaking.* This may be happening to copyright. The recording industry considers that legal ambiguities and the increasing ease of making copies have been exploited to the point where consumers believe that they have a "right" to tape. On the other hand, technological copy protections, if adopted by recording companies and/or recorder manufacturers, will effectively "take away" this "right." From the public's viewpoint, this would be equivalent to a change in the law.

The private use of copyrighted works raises questions about the degree of protection copyright proprietors should be granted, mechanisms to enforce that protection, and the way

160 TA-CIT-302, op. cit., footnote 2, p. 194.

[17]For an elaboration of these views, see: "HomeAudio RecordingAct," Hearings Before the Committee on the Judiciary, U S. Senate, and its Subcommittee on Patents, Copyrights and Trademarks, 99th Cong., lst, 2nd sess., Hearings on S. 1739, Oct. 30, 1985, Mar. 25 and Aug. 4, 1986.

[18]For an elaboration of these views, see Hearings on S. 1739, Op. cit., footnote 17.

in which the degree of protection should depend on technological change.[19] Congress is being asked to define an appropriate boundary between proprietors' rights and those of users.

Copyright issues raised by home audio- or videotaping are part of broader questions about the general status of home copying and other private uses. **The question remains whether the overall objectives of copyright are best served by granting copyright proprietors exclusive rights over home copying, including the right to be compensated for and/or to prevent home copying.**

Up to now, the courts have made explicit, limited, niche-oriented determinations about cases involving home copying and other private uses. Since there is no other specific statutory guidance, courts have made their determinations according to the doctrine of fair use (see above). Leaving these determinations to the courts, as specific cases arise, has allowed Congress to avoid premature or short-lived copyright legislation, and has helped maintain flexibility in the face of changing technologies. Current technological and business trends, however, may make an explicit congressional definition of the legal status of home copying more desirable in order to reduce legal and market uncertainties and to prevent de facto changes to copyright law through technology.

These trends are:

- The movement to *digital representations* of music, video, and other types of entertainment and information available to consumers. With these come new recording technologies for home use, and more powerful means for home users to interact with and manipulate works, as well as to make derivative works.
- The *erosion of niche boundaries* used to categorize copyrightable works according to their content (e.g., audio, video, computer software) or physical format (e.g., audiotape, videotape, computer disk).
- The emergence of *new delivery infrastructures* to bring music, video, and other forms of information and entertainment into the home (e.g., fiber optic cable, pay-per-view and interactive cable services).
- The efforts of some copyright proprietors (e.g., in sound recordings and motion pictures) to develop and implement *technological means for copy-protection*. These will likely require congressional approval for reasons of antitrust exemption and/or legal enforcement.

Extent of Home Copying and Its Economic Effects

Previous Empirical Analyses and Disagreements – Much of the debate on home copying has focused on surveys and economic analyses to support or rebut copyright proprietors' claims of economic harm.[20] For example, recording companies and RIAA have sponsored several such studies over the past dozen years

[19] Technological changes can expand the scope and power of private uses, offering new capabilities for individuals to reproduce copyrighted material at home, manipulate it to make derivative works, and/or further disseminate it. At the same time, new technologies can be used to control private uses – for example, restricting copying and, thereby, private dissemination and the making of derivative works.

See also OTA-CIT-302, op. cit., footnote 2, ch. 7.

[20] Economic harm is one of the four criteria used by the courts to determine if an alleged infringement of copyright is fair use. As discussed above, application of the fair-use criteria maybe premature because current legislation is ambiguous as to whether copyright proprietors' rights extend to private use like home copying. Nevertheless, harm is relevant to the debate because in considering whether proprietors' rights should extend to private use, Congress may wish to take the economic consequences of private uses into account.



Photo Credit: Dave Maley, Ithaca College

Electroacoustic music studio

(see table 6-1 for a summary of these). Alan Greenspan presented the results of the most recent, by the consulting firm Townsend & Greenspan, in 1985 testimony. The testimony included an estimate of recording-industry revenue losses due to home taping (see ch. 7 for details). These findings were rebutted by the electronics industry and Home Recording Rights Coalition (HRRC), who argued that Townsend & Greenspan's estimates overstated the amount of taping being done and the extent to which home taping displaces sales. Moreover, they argued, the studies for RIAA did not take into account the benefits of home taping for consumers, or the stimulative effects of home taping on sales of recordings. But HRRC did not offer quantitative estimates of their own to counter RIAA claims.

Some of the other unresolved contentions from previous RIAA and HRRC surveys and economic analyses have stemmed from their underlying assumptions, as well as from the survey designs. We conclude that the earlier studies were insufficient as a basis for policymaking, mainly because the method-

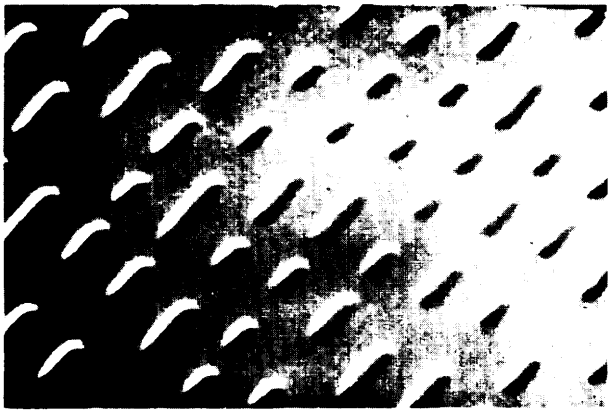

Photo Credit Optical Disc Mastering

Information is recorded on a CD as a series of tiny pits.

ologies and data for the surveys used in the studies were not published in their entirety, preventing independent analysis or verification. There were other methodological factors that limited the usefulness of the earlier studies, and a new OTA survey was designed to address these factors.[21]

One area of continuing disagreement among industry stakeholders is whether only the alleged effects of home taping (or a taping ban) on recording-industry revenues should be considered for policy formulation, as opposed to also considering effects on consumers' benefits or blank-tape revenues.[22] A corollary to this disagreement is whether alleged lost *revenues* or lost *profits and royalties* resulting from home copying should be the basis for estimating claims of economic "harm."

Especially given the ambiguous legal status of home copying, OTA **considers it appropriate to examine effects on consumers, as well as on industry.** The Recording Industry Association of America, Inc. position is that home audiotaping of copyrighted music violates current copyright law, and that the only relevant issue is that the industry is entitled to absolute protection of its music. Therefore, RIAA considers that only the effect on recording-industry revenues, reflected in sales displacement, is relevant.[23] Advocates of home recording like the Home Recording Rights Coalition and Electronic Industries Association consider that (noncommercial) home taping is legitimate under the current law. HRRC believes that the effect of copying or copyright policies on consumer benefits is also relevant. Furthermore, HRRC argues that only the impact of taping on industry profits and royalty payments to performing artists and creators of works should be considered – not gross revenues to recording companies – because profits and royalties are the incentives that determine the supply of new works.[24]

The difference in relative magnitudes (gross revenues versus profits and royalties) is substantial. In his 1985 testimony on behalf of

[21] The survey data obtained for RIAA and HRRC were based on different units of analysis (tapes v. tapings) so that the studies' disparate findings could not be reconciled. The studies did not explore the effects of home copying, or of proposals to restrict or eliminate it, on society's net economic welfare. The studies' focus on active tapers, as opposed to the general population, did not permit analysis for the population at large, or fully consider whether tapers and nontapers had different perceptions as to the fairness of home-taping practices and alternative policies to restrict taping. Finally, the RIAA studies estimated lost industry revenues, not lost profits and royalties (overstating "harm"), and did not fully take price and demand effects into account.

The OTA survey addressed the first three of these points. However, absent industry data with which to estimate price-cost margins, the OTA analyses were also forced to assume that prices remained constant in the short term and to focus on the effects oftaping on revenues (rather than profits and royalties), which tends to overstate industry effects. See ch. 6 and ch. 7 for more details.

[22] The net effect on society's economic welfare can *be* approximated as the sum of the effects on recording-industry revenues, blank-tape industry revenues, and consumers' benefits.

[23] H. Rosen, *Recording* Industry Association of America, Inc., letter to OTA, May 2, 1989 (enclosure with comments on draft ch. 8, pp. 1-2).

[24] Gary J. Shapiro, Robert S. Schwartz, and Steven R. Brenner, Home Recording Rights Coalition, memorandum to OTA with comments on economic issues, May 1, 1989, pp. 7-10.

RIAA (see ch. 7), Greenspan estimated that 40 percent of alleged lost revenues represented "compensable" losses to copyright owners and creators (including the recording companies). Considering the recording-industry rule-of-thumb that royalty payments to performing artists and copyright owners are about 20 percent of the wholesale price of a recording, an estimate of 40 percent (of revenues) for profits and royalties seems high.

The **OTA Survey on Current Home Copying Practices and Motivations** –Many of the arguments for and against the proposed legislative solutions to the perceived problem of home taping hinge on empirical studies sponsored by firms and industry groups with a financial stake in the outcome. These include several surveys of home audiotaping behaviors and attitudes. Congressional concerns about the timeliness, bias, and credibility of these surveys led OTA to engage a contractor to undertake a new survey. OTA used an open development process to design a survey that would be useful to Congress yet would provide data for others to assess the economics of home audiotaping as well. The questionnaire and resulting survey data are available to the public through the National Technical Information Service. Here are the highlights of the survey findings:

Audiotaping Four in ten of a nationally representative sample of persons aged 10 and over have taped recorded music (either from a broadcast or from a record, prerecorded cassette, or compact disc) in the past year. This finding is similar to a 1982 survey, but larger than 10 years ago, when surveys found that21 to 22 percent of the population had taped in the preceding year. Music tapers, in general, seem to have a greater interest in music and purchase more prerecorded music than people who don't tape. The majority of nontapers do not listen to recorded music. See table 6-2 for yearly music purchases and tapings estimated from OTA survey results.)

Prerecorded audiocassettes are the most frequently purchased music format. However, the survey finds that tapers more frequently copy from records than from tapes. People who purchase a prerecorded item with the intention of taping it (as did about one-seventh of the sample) are far more likely to purchase a record or CD than a prerecorded audiocassette. Many people seem to copy for the purpose of "place-shifting," that is, copying music from records and CDs to cassettes that are used in automobile and portable cassette decks.

The survey finds that a large majority of people who copied from prerecorded music in their last taping session copied their own recording for their own use. They usually copied with the intention of keeping the tape permanently. About one-fifth made copies for a friend or copied a borrowed item.[25] Few copies were made from homemade tapes.

People who taped from radio broadcasts were less likely to copy full albums than those who copy records, cassettes, or CDs. In about half of the most recent tapings of prerecorded items, whole albums were taped.

Survey data suggest that home taping displaced some sales of prerecorded products. But they also suggest a stimulative effect on sales. That is, home copying helps advertise songs and performers. In addition, a significant number of purchasers bought prerecorded products with the intention of copying them.

25 The OTA survey did not find much evidence of extensive or intensive copying networks or widespread membership in music "swap clubs.)' Of the 1,501 individuals surveyed, 261 reported borrowing audio recordings from persons outside their household. Of these, about three-fourths borrowed from only three or fewer persons, and borrowed *to* copy rarely or a few times a year. Only 16 respondents reported belonging to a music swap club.

Taping of noncopyrighted material occurred more frequently than taping of prerecorded music. Perhaps three-fourths of taping incidents were for something other than music. Tapes of noncopyrighted material vary widely in type, length, and lasting value, with some, like answering machine messages, being reused often.

The survey finds that availability of dual-cassette and high-sped dubbing capability had little to do with the number of homemade tapes. People with many homemade tapes, or with few, or even none, seemed to own equipment with these capabilities in roughly similar proportions. Thus, for analog recording at least, dual- or fast-dubbing technology did not seem to be driving copying behavior.

Contrasts Between Audiotaping and Videotaping Videocassette recordings, unlike their audio counterparts, were largely made for temporary use. Most videotaping fits the definition of "time-shifting" outlined in the Supreme Court's 1984 *Sony* decision (see above). A few specific types of programs-including concerts and educational shows – were copied for permanent use.

The survey finds that, while television taping was common among VCR owners, copying other videotapes was less common. Of the tapes copied, only a minority belonged to the copier. Some originals were rented from video stores, but the bulk were obtained from friends. Thus, there appears to be a modest level of exchange of videotapes among friends for the purpose of copying.[26]

While the survey found a somewhat higher incidence of video copying among music tapers than among nontapers, there was no strong connection between video- and audiotaping behavior. The survey finds that home video and home audio copying were done by different people, for different reasons.

Public Opinions About Home Copying Most members of the public were unfamiliar with copyright law and its application to home taping. Nevertheless, they had opinions on the norms of acceptable behavior in home taping. In general, the public–both tapers and nontapers – believe that it is acceptable to copy a prerecorded item for one's own use or to give to a friend. The only copying that was universally considered unacceptable – by tapers and nontapers – was copying a tape in order to sell it.[27]

Most members of the public had no notion whether home copying was fair to the recording industry, to performers, or to the consumer. They did, however, strongly oppose all the tested suggestions for changes in the system that would impose user fees or limit taping through technological fixes.

OTA's Economic Analysis-OTA commissioned three independent economic analyses. The analysis by Michael Katz developed a theoretical framework for analyzing the economic effects of home copying. It shows that the effects of private use, including home copying, on economic efficiency and on society's economic welfare are complex and ambiguous. The effects of private use depend critically on the assumptions about demand for originals and copies and the effects of copying on the long-term supply of new works. Choosing among assumptions about underlying factors is a subjective process. Some of the most crucial factors are very difficult to measure and several alternative assumptions may be equally plausible — for example, the extent to which consumers would

[26]Of the survey respondents who reported ever borrowing a videotape, the majority reported that they rarely or never borrowed to copy. Of those who did, virtually all reported doing so only a few times a year.

[27]But the youngest respondents (ages 10-14) were almost neutral on this issue — the unacceptability of selling home copies increased with age.

increase purchases of prerecorded music, absent home taping. Thus, the same survey information can support widely different estimates, yet this type of uncertainty is unlikely to be reduced by more data.

William Johnson used the OTA survey to examine some of the factors that influence home audiotaping and purchasing originals. Johnson found that individual choice between copying and buying originals is determined in part by the person's value of time: a person who values his time highly tends to copy less and buy more. Johnson also found that income increases the demand for both copies and purchases and that copying is more concentrated among the young. He was unable, however, to detect statistically significant estimates of the extent that copies substitute for originals.

Fred Mannering used survey data on the consumers' choice of format for listening to music to estimate econometric models of consumers' choice between purchasing recorded music and taping it. He used these estimates to determine the change in consumers' economic welfare (based on their valuation of homemade tapes) in response to a hypothetical ban on home audiotaping. In addition, he estimated hypothetical changes in recording-industry revenues (under various assumptions about the degree to which home tapes displace and/or stimulate sales of recorded music) and hypothetical changes in blank-tape revenues (assuming fewer blank tapes were sold absent copying). While the scenario of a ban is extreme, it allows the change in recording-industry revenues without home taping to be estimated in a manner comparable to Townsend & Greenspan's (see ch. 7), along with effects on blank-tape industry revenues and consumers. The net effect on industry revenues is the sum of the estimated changes in recording-industry and blank-tape revenues. The net effect on society's economic welfare was approximated by adding the industry and consumer effects.

Chapter 7 discusses Mannering's analysis in detail, and presents estimates of the hypothetical effects of a ban on home taping that the same set of survey and other data can be "shown" to support.[28] These examples produce a broad range– varying by a factor of 30–of hypothetical recording-industry revenue changes absent home audiotaping.[29] These variations do not, however, alter the qualitative result, which indicates a consistent loss in consumers' economic welfare and in society's net economic welfare.

The estimated loss in consumers' economic welfare reflects the value consumers place on home taping. It is a monetary valuation of consumers' loss in satisfaction, *without any loss in actual income,* after a taping ban. Absent taping, not all home tapes would be replaced by purchases. (Other applications of this type of analysis include estimating the monetary value of consumers' dissatisfaction from increased airline travel time and the monetary value of increased satisfaction from reducing the time between airline departures.[30])

[28] See tables 7-11 and 7-12.

[29] The variations–24 examples in all, shown in tables 7-11 and 7-12 –differ according to: whether both prerecorded and broadcast music taping or only taping from prerecorded sources is banned, whether an attempt is made to correct for business use of blank tapes, how much sales-displacing material is assumed to be on each tape, how the OTA survey questions on displacement are interpreted and/or discounted to produce a sales displacement rate, and whether the ability to make home tapes is assumed to st i mu late some purchases of prerecorded music.

[30] Steven Morrison and Clifford Winston, ***Economic Effects of Airline Deregulation*** (Washington, DC: The Brookings Institution, 19$6).

Although home taping may reduce the recording industry's revenues, Mannering's analysis suggests that in the *short term* a ban on audiotaping would reduce blank-tape revenues, be more harmful to consumers than beneficial to the recording industry, and result in a loss of benefits to society in the billions of dollars. The *longer-term* consequences of a ban are less clear, and would depend on how recording-industry profits were invested, on how increased revenues would affect the creation of new works, on how recording companies chose to price recordings, on what new technologies were introduced, and on how consumers' tastes changed.[31] **In the long term, the net effects on society's economic welfare might be positive or negative.**

Even if policy formulation is based on short-term economic considerations, net effects should be considered along with effects on individual industries and consumers. Based **on the OTA survey data, Mannering's results show there is no single estimate of the dollar values gained or lost as the result of a taping ban.**[32] A ban would have distributional effects among industries (i.e., recording- versus blank-tape) and consumers, but these effects don't balance. Instead, because consumer benefits from home taping appear to be so large, a ban would result in a large net loss of benefits to society. These net effects should be considered in policy formulation. It is potentially misleading to base policy on an estimate of only one of several harms or benefits.

Congressional Role

Congress faces a complex set of choices regarding home copying. The question of whether the public interest is better served by extending copyright proprietors' rights to private use (thus allowing them to prevent or demand payment for private uses, such as home copying) is fundamental in making these choices. The next section of this chapter discusses the dimensions of the policy choices facing Congress, and presents options to implement them. For the more specific options, the focus is on home audio copying. The final section discusses implementation considerations.

POLICY CHOICES AND OPTIONS

Introduction

Some choices facing Congress offer broad alternatives for action, cutting across boundaries of industry and technology, and offering the opportunity to establish policies for the next decade and beyond. Other alternatives are more narrowly defined within a particular industry or technology, such as home audio copying or home use of DAT recorders. While more narrowly defined policies may be more easily formulated, their usefulness may be shorter-lived, as technology creates other problems.

Previously, the state of technology made an explicit determination about the extent of copyright proprietors' rights over private use less crucial than today. There was less private use and enforcement against private copying was difficult. Now, technological changes have lowered the cost and increased the scope of private copying; at the same time, technological changes make it possible to impose high barriers to unauthorized private copying.

[31] Assessing the long-term effects of financial incentives on creativity and output would be extremely difficult and would require full disclosure of proprietary industry data.

[32] Depending on selections among reasonable assumptions, following a taping ban recording-industry revenues might not change much or might increase by several tens of percent. Blank-tape revenues would decline substantially. See ch. 7 and tables 7-11 and 7-12.

Technological change will continue to erode niche boundaries based on the content or format of copyrighted works and there are spillover effects between industries.[33] Even quite specific options for dealing with home copying must be selected within the broader legal context of private use.

The first choice Congress faces is whether to address home copying issues at all at this time. If it does not act now, or avoids premature legislation that might soon become obsolete, then home audiotaping issues will likely be resolved – with some delay and in a piecemeal fashion – by inter-industry accommodations and/or the courts. As a consequence, the underlying issues of private use will likely resurface in other areas like home videotaping, electronic information, and computer software and result in legal uncertainties that will further complicate industry decisionmaking. Moreover, industry agreements may still require congressional action to ratify the agreement for purposes of enforcement or relief from antitrust. A series of piecemeal accommodations would incrementally define the boundaries of the copyright law.

If Congress chooses to act now, then it must choose whether to address home copying in a comprehensive or limited fashion. Comprehensive policies may be more long-lived, but may take longer and be more difficult to formulate. Limited policies might be developed more quickly but would not resolve parallel issues in other areas. Meanwhile, home-copying controversies in these other areas might result in technological "solutions" that would have the effect of changing the copyright law to extend copyright proprietors' rights into private use. Moreover, polices developed by Congress for a specific area might be argued as precedents in another.

Whether Congress' approach to home copying is broad or narrow, a third set of choices applies for each (or any) area of home-copying: whether to allow it, foster it, or restrict it. To "allow)' home copying would mean stating explicitly that proprietors' rights do not extend into private use. To "foster" home copying would mean not only "allowing" it, but also limiting anticopying measures, including agreements to implement technological copy protections. To "restrict" home copying would mean stating explicitly that proprietors' rights extend to private use– that home copying is copyright infringement. Restricting home copying could also include provisions for legal enforcement of copying bans, mandatory use of technological copy protection, and/or compulsory licenses and fees for home copying.

Interim, narrowly focused legislation might relieve some of the pressing issues in the near term, thus providing time to formulate comprehensive solutions. If this strategy is chosen, the preferred interim policy options (pending comprehensive resolution) might be different from those preferred if only the near-term view is considered. Some interim measures are more difficult or costly to undo than others. For example, an interim home-copying royalty fee could eventually be rescinded, but there would be some inertia, and recipients may have come to view it as an entitlement (e.g., as individuals have viewed subsidized local telephone service or as consumers view their "right" to make home copies). Some technological means for copy-protection may be embedded in the works themselves (e.g., the Copycode "notching"); if changes in the law subsequently held that the

'For example, DAT can be used for computer data storage as well as audiotaping. Some industry observers consider that the controversy over DAT audiotaping has affected development of DAT computer peripherals.

private copying did not infringe copyright, then it might be difficult or costly to undo the protection (e.g., consumers who had purchased players with scanner chips would have to bypass them).

Advisory panel members from the creative and performing arts communities consider home copying (which in their view reduces income to performers and creators) to be particularly unfair to their groups because, compared to recording companies, they tend to be underfunded. They see digital copying as the latest in a series of technologies that has progressively taken away work from performers and musicians and has increased the need for subsidies to maintain the arts. *Opinions differed among members of OTA's advisory panel on the relative importance of home copying to the problem of encouraging the arts. But several panel members felt that the overall issue of financial support for the arts deserves attention. This, however, is beyond the scope of this study.*

Fundamental Copyright Policy Questions

Underlying the choices facing Congress are fundamental policy questions and value judgments. Foremost among these is the issue of whether copyright holders' rights should be extended to private use. Audiotaping has been widespread for years. Copyright holders like recording companies have been unable to prevent home copying unilaterally and have not been able to secure legislation explicitly establishing their rights over home copying and/or home-copying royalties. Technological changes now make it possible for copyright proprietors to restrict unauthorized copying. However, for audio copying, implementing technological copy protections would require agreements between the recording industry and audio-equipment manufacturers and/or legislation.[34]

The intent of U.S. copyright law is to serve the public interest by jointly promoting widespread dissemination of intellectual property while providing sufficient incentives for the creation and distribution of new works. New technologies can assist in both goals.

New **technologies are able to extend the traditional bounds of copyright to include private use. The major question facing Congress is whether extending copyright proprietors' rights to private use is necessary to serve the public interest.**[35]

Other questions concern the rights of the artist or creator versus the rights of the consumer to modify the artistic works. In the United States, the creative artist has traditionally had no protection or control over his work once it is sold (see ch. 3). The purchaser has been free to use, modify, or mutilate the work.[36] Until now, there has been a clear distinction between mass-produced entertainment products and artistic works that are unique or produced in limited numbers. New technologies may provide consumers with the

[34]For example, microprocessors embedded in recorders could recognize copy-protection codes in the software, along with other codes that identify the specific work.

[35]OTA is grateful t. D. Moulton for his comments in this regard. Noting the rapid transformation of creative works into the digital realm, and the consequential improvements in (lower-cost) storage, transmission, and reproduction, Moulton considers that a copyright law for future decades will have to address the issue of compensation due copyright holders whose works are not tied to or fixed in physical media. Toward this end, Moulton suggests a broad approach focusing on documenting and compensating the transfer and use of such intellectual property. (David Moulton, Berklee College of Music, personal communication, Aug. 5, 1988.)

[36]Some recent controversies concerning artists' rights have involved motion pictures (colonization and time compression) and fine arts (painting sculptures), Another involves the rights of composers– protection against "material alteration" for works used for motion picture soundtracks –and writers whose existing works are later incorporated into motion pictures (Bill Holland, "U.S. Pushes 'Moral Rights' for Composers, " *Billboard*, Apr. 1, 1989, p. 4.).

means to modify unique or limited-production works and to create derivative works. The extent to which this becomes possible depends as much on the legal status of these uses as on the state of technology. Thus, congressional consideration of home-copying policies may require some attention to questions about the broader concept of artists' rights and copyright (see box 1-A).

Choices for Congress

The first decision that Congress faces is whether to address home-copying issues at all at this time. This is a real choice — to act now or not. Either choice has its merits. Congress might choose to rely on the courts to resolve home-copying cases according to existing law. Waiting would allow the effects of new digital copying technologies to become more evident, so that any eventual copyright legislation could be based on real experience, rather than on assumptions or projections from analog-copying experiences. If the choice is *not* to act now— i.e., the choice is to maintain the status quo or to avoid premature legislation – then the issues raised by the home audiotaping controversy will likely be slowly addressed in a piecemeal fashion by the courts,[37] by threats of lawsuits,[38] and/or by private arrangements

Box l-A– Questions Concerning Artists' Rights and Private Use

In some European countries a major goal of copyright laws is to protect the connection between the artist and his work through artists' rights or moral rights recognizing the author's creation of the work and/or prohibiting the change, mutilation, or alteration of artists' works. Artists' rights were first recognized by the Berne Convention in 1928. In adhering to the Berne Convention in 1989 the United States specifically did not agree to the provisions for moral/artists' rights (see ch. 3).

. Should the European tradition of moral rights be adopted in the United States so that artists have continuing or permanent rights to the "integrity" of a work? Or, are the creative, economic, and legal differences great enough that a different approach for dealing with artists' rights is desirable?

● If artists' rights are granted in the United States, should these rights end at the home, or should they encompass private domestic uses? Should purchasers be able to do whatever they want with the work within the home — including modifying, enhancing, or destroying it?

. If a purchaser "customizes" a work to meet his or her needs (e.g., cuts a painting down to fit in the home or copies only **favorite** songs from an album to make a custom audiotape), should the Government step into what may be a purely "personal" occurrence? Where are the boundaries?

. If artists' rights are granted in the United States, can they be enforced? How, when, and by whom? What will he the effect on the market valuation of works? What are the privacy and First Amendment implications of enforcement over home uses?

. If artists' rights are granted in the United States, should they only address financial loss, or should emotional distress or a lessening of the artist's creative reputation be included? Who would determine the extent of these harms, and how? Arguably, situations could exist where modification of a work could enhance it aesthetically or materially. Should such modifications constitute "harm"?

SOURCE: OTA

37 The 1984 Supreme Court decision about home videotaping is an example. Although the Supreme Court and Other courts have provided some guidance in home-copying situations, many questions and issues remain unresolved; the Supreme Court has previously inferred that Congress may wish to examine such issues (see ch. 3).

38 This type of threat has been at least partially responsible for the delayed introduction of consumer DAT machines to the U.S. market – now 2 years or more.

between the hardware and software industries themselves.[39]

But court decisions will not put home-copying issues to rest. Issues that surfaced for home audiotaping have already begun to resurface in other areas, like home video, computer software, and other forms of electronic information and entertainment.[40] Absent congressional action, these new controversies might also be dealt within a piecemeal fashion, with industry or the courts incrementally delineating the boundaries of copyright law. Because of antitrust considerations, Government involvement might still be sought to ratify or enforce intra- or interindustry agreements (see box l-B). Over the long term, this pattern of threatened litigation and/or requests for special legislation will become cumbersome and costly to society. The technological trends discussed in the next chapter will tend to increase the number, frequency, and complexity of questions about home copying and private use. Further erosion of niche boundaries can undermine "piecemeal" solutions. Moreover, some copyright proprietors consider that nonaction could disastrously reduce economic returns from intellectual property. The recording industry considers that, "If the rights of copyright owners are not adequately protected, the continued viability of our industry cannot be maintained."[41]

Market uncertainties, deriving from legal uncertainties,[42] have delayed or complicated the introduction of new consumer electronics hardware and new audio formats (for example, DAT and now, erasable/recordable compact discs), and have made market solutions doubtful. There are other difficulties with market solutions:[43] because it is difficult to distinguish between copiers and noncopiers,dd a "pay at the source" approach for copying through the pricing of recordings would likely increase prices for tapers and nontapers alike, with the possibility of reducing demand for originals or encouraging more copying. Offering copyable and copy-protected versions of prerecorded works, or bundling products (e.g., packaging a CD and cassette together at a discounted price) have been considered impractical. However, if home copying was explicitly declared *not* to be an infringing use, then manufacturers and retailers might find it more advantageous to change pricing or product lines.

Similarly, uncertainties stemming from the ambiguous status of home copying may also delay the introduction of new products and technologies in other areas, perhaps affecting the prospects for telecommunications systems, such as fiber-optic cable or new media like high-definition television (HDTV).[45] The effects of these uncertainties and delays are not limited to hardware. Incentives to create

[39] In early 1989, the consumer electronics and record industries reportedly began negotiating agreements regarding DAT machines; the discussions reportedly centered on technical methods to prevent home taping and/or fees on DAT machines or tapes. (Shig Fujita, "Hardware Firms, Labels Closer to Accord on DAT," *Billboard*, Apr. 1, 1989, p. 1; *TV Digest, vol.* 29, No. 12, Mar. 20, 1989, p. 16.)

[40] For example, there is now a movement by the Motion Picture Association of America (MPAA) for technological copy-protection for motion pictures delivered via pay cable and pay-per-view (PPV) services (see ch. 2).

[41] H. Rosen, RIAA, letter to J. Winston, OTA, May 2, 1989, p. 2.

● For example, a firm that considers home copying "illegal" is more likely to seek to prevent home copying, or to be compensated for it, than to change pricing policies to reflect the added value of originals as a potential source of copies.

[43] See ch. 7.

[44] The prevalence of home copying varies according to the type of material. For example, most of the OTA survey respondents had audio recording equipment, and about half reported making home copies from prerecorded material. By contrast, only about one-fifth of the VCR owners had ever copied a prerecorded videotape.

[45] These new infrastructures are examined in U.S. Congress, Office of Technology Assessment, *Critical Connections: Communication for the Future,* OTA-CIT-407 (Washington, DC: U.S. Government Printing Office, forthcoming)

Box 1--B– Industry Agreements and Antitrust

Businesses that desire to join together as an industry to protect their economic interests have two sources of potential protection from the antitrust laws. First, they may direct their actions toward legislative or executive bodies and gain protection under the Noerr-Pennington doctrine. Since the Noerr-Pennington doctrine applies only to government petition, however, Congress or a designated agency would still have to approve industry agreements that require antitrust exemption. Second, they may request a prior *review* of their intended actions by the Antitrust Division of the Department of Justice under 28 CFR section 50.6. The Antitrust Division claims not to be constrained by its business reviews, however. Also, a large proportion of antitrust cases are brought by private plaintiffs, and it is not clear how much private litigation is deterred by business reviews. [1]

The Noerr-Pennington doctrine, initially formulated in a 1961 railroad case *(Eastern R.R. President Conf. v. Noerr Motor Freight, Inc., 365* U.S. 127 (1961)), holds that joint efforts by businesses to influence legislative or executive action represent *political* action (protected by the First Amendment), which Congress did not intend to regulate through the antitrust laws. As the U.S. Supreme Court observed, "the very concept of representation depends upon the ability of the people to make their wishes known" (ibid. at 37), and so "efforts to influence public officials, regardless of intent or purpose...do not violate the antitrust laws, even though *intended* to eliminate competition". *(United Mine Workers v. Pennington,* 381 U.S. 657,670 (1965))

Although the Department of Justice is not authorized to give advisory opinions to private parties, for several decades the Antitrust Division has been willing (under certain circumstances) to review proposed business conduct and state its enforcement intentions. A request for business review must be made in writing to the Assistant Attorney General (Antitrust Division); the requesting parties are under an affirmative obligation to make full and true disclosure with respect to the business conduct for which the review is requested. After the review, the Division may: (i) state its enforcement intention, (ii) decline to pass on the request, or (iii) take such other position or action as it considers appropriate. The Division remains free to bring whatever action or proceeding it subsequently determines that the public interest requires. The request, reply, and other supporting information are generally placed in a public file, unless a firm can make a case for withholding it from the public. To date the Department has never brought a criminal action where there has been true and full disclosure at the time of presenting the request. (Excerpted from 28 CFR, section 50.6,)

According to the Antitrust Division, at the time of publication, there was no public information as to whether the recording industry had submitted a request for a business review.

SOURCE: OTA

[1] T. Brennan, The George Washington University, personal communication, Apr. 24, 1989.

and produce new types of works can also be affected, although these effects cannot be estimated with precision. The linkages are extremely complex, and the effects of changing financial incentives on the supply of creative works are very long-term.

Whatever policy measures are selected, the transition will have adjustment costs; a "seamless)' transition is unlikely.[46] Who bears these costs and how they are distributed among the hardware industries, the software industries, consumers, and the general public depend on the policies chosen.[47] **Choosing an appropriate balance of harms and benefits from uses of new technologies is a political** decision, not a technical one, in which the public has a stake.

[46] There are several possible adjustments. One could be changes in the current levels and/or distribution of industry costs, revenues, and royalties. Another could be establishing mechanisms and institutions to enforce prohibitions on copying and/or to collect and distribute new licensing fees. Still another could be changes in the way one or more industries do business – evolving to new products, new technologies, new markets.

47 The current home-copying debates have been largely distributional in nature, so it is not surprising that policies to resolve them have distributional consequences.

Policy Options

Option 1: Take no action on home copying at this time.

Congress could avoid premature remedies that might be short-lived, and wait until the impacts of digital technologies are assessed. The drawback is that the ambiguous legal status of home copying might hinder creativity and delay the introduction of new consumer technologies. Moreover, the home audiotaping issue, and similar controversies in videotaping and computer software, might lead to piecemeal solutions by the courts or the industries involved. The results of such accommodations might be difficult to undo if they should prove ineffective.

Option 2: Deal with home copying in a broad context. Consider the general problems associated with copyrighted works and technological trends. Determine whether the public interest warrants allowing, fostering, or restricting home copying generally, or specifically for certain types of works.

By taking this action, Congress could establish a relatively stable legal environment and eliminate some market uncertainties. This may take several years to achieve. In the meantime, market and legal uncertainties would continue, and might lead to industry actions such as "voluntary' technological copy-protection. Such measures would, in effect, extend the rights of copyright proprietors into private use before Congress had determined whether it was in the public interest to do SO.

Option 3A: Allow home audio copying.

Option 3B: Allow analog home audio copying

Option 3c: Allow digital home audio copying

These options would end at least some of the legal uncertainties of home audio copying and would free firms to make decisions about prices and product lines in a more certain atmosphere. Copyright proprietors, such as recording companies and music publishers, would be free to copy-protect their works, but clever consumers could circumvent these measures. Intra- or interindustry agreements would be subject to the antitrust laws, but might be accorded special exemptions.

Analog and digital copying could be treated separately. Home analog copying is well established, and might be more dificult to prohibit, restrict, or license than home digital copying, which is not yet widespread in the United States. Because of its speed and high quality, digital copying is thought to present the greater legal and market challenge.

Option 4A: Foster home audio copying.

option **4B:** Foster analog home audio copying

Option ***4c:*** Foster digital home audio copying

Legal uncertainties would be reduced. Under these options, industry agreements to implement copy-protection technologies would likely not withstand antitrust review.

Option 5A: Extend copyright holders' rights into private use and prohibit home audio copying by requiring the use of copy-protection technologies in recorders and software.

Option 5B: Extend copyright holders' rights into private use and prohibit analog home audio copying by requiring the use of copy-protection technologies in recorders and software.

Option 5c: Extend copyright holders' rights into private use and prohibit digital home audio copying by requiring the use of copy-protection technologies in recorders and software.

These options would increase the prices of hardware, because additional features (e.g., protection circuitry and logic) would be re-

quired. The effects on overall demands for hardware and software are uncertain.

Option 6A: Extend copy-right holders' rights into private use and establish a compulsory license for home audio copying.

Option 6B: Extend copyright holders' rights into private use and establish a compulsory license for analog home audio copying.

Option 6C: Extend copyright holders' rights into private use and establish a compulsory license for digital home audio copying.

Congress would have to establish means and criteria for administering and distributing the royalties, and determine whether they should be applied to sales of recorders, recording media, or both.

Option 7A: Extend copyright holders' rights into private use but establish a free compulsory license for home audio copying.

Option 7B: Extend copyright holders' rights into private use but establish a free compulsory license for analog home audio copying.

Option 7c: Extend copyright holders' rights into private use but establish a free compulsory license for digital home audio copying.

This option would broaden the scope of copyright but would retain flexibility in restricting copying or establishing royalties. Observed usage patterns for the new digital copying technologies could be used as a basis for policy, instead of forcing policy-makers to act on assumptions about consumer tastes and behaviors.

Option 8: Select from the above, with different treatment for analog and digital copying, or specific types of copying (e.g., multigenerationa1 copies).

Combinations could allow current behaviors to continue but could tailor uses of new technologies or products (e.g., combining Options 3C and 4B, or 5C and 7B, etc.).

CONSIDERATIONS FOR POLICY IMPLEMENTATION

Distinguishing Among Types of Home Copying

In considering whether to allow, foster, or restrict home copying, or to take no action at this time, Congress must define what home copying is.[48] Furthermore, Congress might wish to set policies that make special provisions for particular types of home copying. Statutory definitions of home copying could be drafted broadly or narrowly and segmented into categories of type and use.

For example, home copies may be made from purchased, rented, or borrowed originals, or from broadcast or pay-per-view material. They may be made for personal use or for a friend or relative. Copies may be made for one-time use or as additions to a home-recording "library."@

The benefits consumers derive from home copying and the impact of home copying on revenues earned by copyright holders depend on the nature of the copy and how it is used (see box 1-C). Home copies are often more flexible than "originals." They can be interrupted, restarted, and manipulated; the programming can be customized for personal

48 For example, the new British copyright law defined "time-shifting" and "cable programming)' when declaring that time-shifting of broadcast or cable programs was not an infringement.

49 Note that these attributes are not intended to be *niche*. specific – for example, one criterion is not whether the commercial source material is "audio" or "video" but whether or not it is priced for a single use or unlimited uses.

Box l-C–Attributes and Uses of Home Copies

Attributes

The *source* of the copyrighted material used to make a home copy could be one or several purchased, rented, or borrowed "hard copy" originals (e.g., records or commercial videocassettes), or original material delivered to the home by broadcast stations (radio, television) or cable/satellite system operators (basic, premium, or pay-per-view services). The original material might be integrated with advertising (e.g., commercial broadcast television or basic cable), delivered with surrounding advertising (e.g., radio, public television, "previews" at the beginning or end of a commercial videocassette), or delivered without advertising (e.g., premium cable channels).

Home copies may be made in the identical *format* as the original, or in formats that differ in terms of the physical configuration (e.g., record/tape/CD), and the forms in which the original and copy store the work *(e.g.,* analog or digital). For example, a DAT recorder could make a digital copy of a prerecorded DAT cassette, or it could make a digital copy of the analog material on a record (by sampling the analog signal). "Format-shifting" (particularly from records to tapes, and from digital compact discs to analog tapes) is currently important for home audiotaping. The OTA survey found that only about a third of home audiotapes made by respondents using prerecorded sources were copied from prerecorded cassettes. The bulk of home audiotapes of this type were copied from records and CDs, presumably for portable or car use. Moreover, an original maybe the source of more than one copy, although the results need not be identical (e.g., a song may be copied onto two different selection tapes).

uses

The uses made of originals or home copies vary according to three dimensions: the frequency of use, the manner of use, and the identity of the user. Looking first at *frequency of use, we see* that an "original" maybe offered in the marketplace for a single use (e.g., a pay-per-view movie or sports event), multiple uses within a freed time period (e.g., a rented videocassette tape), or unlimited uses (e.g., a purchased videocassette tape). A purchased (tangible) original or a home copy are potentially available for unlimited uses. In practice, however, some types of home copies are made to be used only temporarily — e.g., a time-shifted television serial or sports event — while others are intended for repeated uses — e.g., a homemade selection tape of favorite songs, or a homemade copy of a prerecorded videocassette tape.

The *manner of use* of an original or copy may be uninterrupted (e.g., original broadcast material or pay-per-view movies/concerts), or interruptible and/or manipulable (e.g., a purchased original or homemade audio- or videotape that can be stopped and started again after a refreshment break, rewound to catch a missed detail, or "zipped" past commercials).

The ***identity of the user*** of the original and home-made copy maybe the same or different. An owner of an original may use it to make copies for himself or others, he may rent an original to copy, or he may borrow an original from another household member, or a relative or acquaintance.

SOURCE: OTA

taste. To the extent that consumers value this flexibility, they will prefer copies to originals. Originals then become more valuable as a source of copies. Copyright proprietors may be unwilling or unable to adjust prices to account for copying, they may be unable to capture the added value for other reasons, or they may prefer to sell multiple identical originals (e.g., record and tape) than increase retail prices to recover consumers' valuation of copies (for changing from record to tape, custom programming, etc.).[50]

[50] By contrast, the trend toward pay-per-transaction video rentals (see ch. 2) reflects in part the desire of copyright proprietors to share in each rental transaction, as opposed to setting a standard price not based on usage.

For original materials that are supported by advertising (like broadcast or cable programming), home copying ostensibly reduces the value of advertising as well. For example, commercials may not be copied, or if copied, may be "zipped" through.[51] For works that are entitled to performance royalties, because the majority of performers' payments come from fees for *reuse* established in collective-bargaining arrangements, some performing-artist and musician groups believe that their income is reduced if home copying cuts down on repeat broadcast performances.[52]

Detailed categories of home copying could be established (box 1-D),[53] but the number entitled to special treatment through public policy are fewer. It is probably practical to identify only four types of home copying that might merit special policy treatment:

- Copies made from commercial material that is priced according to the expected frequency of usage – e.g., rented originals or material delivered to the home on a fee-per-use basis[54]
- Multiple copies made from the same original
- Multigenerational copies (copies of copies)
- Digital copies

Technological Copy Protections

Implications of Allowing, Fostering, or Restricting Home Copying

Congress could foster or restrict home copying by prohibiting or encouraging technologies designed to control it. Technological restrictions could be built into recording hardware, software, and/or electronically transmitted material. If Congress chose to continue the status quo of allowing home copying, then copyright holders could possibly act on their own to prevent unauthorized copying through technological means.

To *restrict* home copying, Congress might choose to prohibit the domestic sale or importation of recording equipment that did not include a device or circuit to prevent unauthorized copying (e.g., by recognizing special codes embedded in software or transmissions). The Commission of the European Communities' 1988 Green Paper favored this approach tore-

[51] While many newer television sets come with remote control features, and some cable services offer remote control channel selection, for many households it was the VCR that first brought remote control into the home. One aspect of remet e control/VCR use that attracted attention during the Sony case was the potential to not record or to fast-forward time-shifted material past corn mercials. Now, with remote-controls, consumers not only "zip" through commercials during playback, they "zap" from one channel to another during commercials while watching TV. As a result, particularly with the expanded offerings on cable, consumers (particularly those under age 35) are "grazing": flipping through channels out of boredom or to see what else is on. (Peter Ainslie, "Confronting Nation of Grazers," ***Channels,*** September 1988, pp. 54-62. ***Channels*** commissioned a national survey of TV viewing habits.)

A recent survey found that at least 66 million households have remote controls and that, on average, viewers with remote controls or cable "usually" watch twice as many different channels as those without, and those with VCRs watch more channels t han those without. (Data from Commercial Analysts Co. and Frank Magid Assoc. reported in ***Multichannel News,*** Oct. 31, 1988, p. 53.)

[52] OTA staff interviews with representatives of performing artists and musicians, Jul. 13, 1988.

[53] For example, one category might consist of copies of broadcast material kept within the household for a single manipulable use. Another category might consist of copies containing portions of several owned recordings, kept within the household and made to provide the material in a different storage medium for unlimited uses.

[54] The latter would include pay-per-view offerings. Note, however, that pay-per-view is different from direct electronic delivery as discussed in ch. 2. Original material purchased via direct electronic delivery would be treated like any other purchased *original.*

Alternatively, prices for these services could be raised to take copying into account, or copyable and copy-protected versions could be offered at different prices.

Box 1-D–Parameters of Home Copying

The source of the material copied:

- ● Tangible sources
  - Prerecorded material owned within the household
  - Prerecorded material borrowed from outside the household
  - Prerecorded material that has been commercially rented
- . Intangible sources
  - Free broadcast material
  - Material delivered via basic cable service (e.g., broadcast stations)
  - Material delivered via premium cable subscription services
  - Material delivered via delivery-on-demand with per-transaction payment (e.g., pay-per-view)

The disposition and use of the copy:

- ● Kept within the household
- . Given to others outside the household
- ● Loaned to others outside the household

The format of the copy and original:

- ● Same or different storage medium (format shifting)
- . Multiple (partial) copies from the same original
- . Multiple identical copies
- . Multigenerational copies ("cloning" copies of copies)
- . Analog or digital original
- . Analog or digital copy

Quantity and quality of use:

- ● Single uninterrupted use
- . Single interruptible use
- . Single manipulable use
- . Multiple uninterrupted uses for a fixed time period
- . Multiple interruptible/manipulable uses for a freed time period
- . Unlimited interruptible/manipulable uses

SOURCE: OTA

strict digital copying of digital sound recordings.[55] While hardware manufacturers and consumers might complain that such a law would be a costly burden, it would not be the first time that Congress had implemented a technical requirement for domestic consumer-electronics sales. In 1962, Congress passed the "All Channels Receiver Act,"[56] which authorized the Federal Communications Commission (FCC) to prohibit television receiver manufacturers from selling sets that did not receive UHF broadcast stations. In that case, the intent was to foster UHF broadcasting.

In pursuit of this policy, Congress could be expected to permit producers of copyrighted material (e.g., recording companies) to embed copy-protection codes in the software they produced (like computer software is sometimes protected), and perhaps even to require that broadcasters who played copy-protected material (e.g., radio stations) include any anticopying codes in their transmissions instead of removing them before transmission.

To *foster* home copying, Congress might prohibit the sale of recording equipment that is engineered to hinder home copying or other copying deemed fair use, since such designs would be considered restraints of trade. Similarly, Congress might prohibit users of the publicly owned broadcast spectrum from broadcasting anticopy codes that would prevent time-shifting playing at a later time. Such legislation would be justifiable on the same basis as the Copyright Act's first-sale doctrine limiting copyright proprietors' rights (see ch. 3). Finally, Congress might even prohibit software producers (e.g., recording companies) from embedding copy-protection codes in their products, though this would probably be unnecessary in the absence of sensing devices in recorders.

[55] Commission of the European Communities, Green *Paper on* Copyright *and the Challenge of Technology: Copyright Issues Requiring Immediate Attention,* COM(88) 172 final, (Brussels, Belgium: June 7, 1988), p. 136.

[56] Public law 87-529, sw.. 1 (76 Stat. 150, codified at 47 USC 303(s)).

If Congress chose not to act at this time, or chose to *allow* home copying, then copyright holders, such as the recording companies, could act on their own to frustrate unauthorized home copying. Any actions they took to lobby Congress, the executive branch, or the Copyright Office to promulgate protective regulations would seem to fall under the Noerr-Pennington doctrine, and would thereby protect them against antitrust prosecution. If the copyright holders sought to threaten hardware manufacturers to prevent them from marketing recorders that did not adequately inhibit home copying, however, they would face a high risk of antitrust lawsuits.

If Congress were unwilling to require recorders to have anticopying devices, one way for copyright holders to possibly avoid antitrust action would be to submit a letter to the Antitrust Division of the Department of Justice explaining the economic justifications for the proposed action and requesting a business review. If the Department of Justice concurs that the benefits of this protection outweighs its costs (including restrictions on fair-use copying) then they would be protected against Government-initiated antitrust lawsuits. Private antitrust actions could still be initiated but the deference generally given to such Government actions in rule-of-reason cases (as this would be) would likely discourage private plaintiffs.

Special industry exemptions from the antitrust laws are rare and frowned upon by the Department of Justice, and the success of an application for exemption in such circumstances is doubtful. Although (for instance) the soft-drink industry was able to secure a special exemption for its territorial exclusivity agreements,[57] it would seem unlikely that Congress would grant such an exemption, if it were not willing to require recording equipment to contain anticopying devices.

Consumer Resistance

Technological copy protection would likely face resistance from some consumers, particularly in the case of home audiotaping.[58] Although the OTA survey found the public unsure about the fairness of home copying to the copyright owners, they clearly opposed any restrictions on copying. The majority considered changes such as copy protections or fees to be unfair (see ch. 6). Therefore, unless there were legal prohibitions on doing so – and perhaps even if there were — consumers might be inclined to circumvent them if possible, or even to purchase devices to circumvent the protection. Unless prohibited and policed, "gray markets" would likely emerge for recorders without copy-protection or for modified machines.[59]

Provisions for Fair-Use Copying

Any copy-protection technology would have to accommodate fair-use copying (unless the concept of fair use was narrowed) and allow copying of a work once its copyright had expired and it was in the public domain.[60] Special classes of recorders, software, and/or blank media might be required for certain

[57] Public Law 96-308, codified at 15 USC 3501.

[58] In the case of computer software, Copy protection has almost disappeared because of consumer resistance and preference for unprotected software; protected software was difficult or impossible to back up for archival purposes or use with a hard disk.

[59] Since 1988, there has been an active gray market for DAT recorders.

[60] For example, a music student might want to copy a particular piano passage – as played by three different pianists – to study differences in technique and expression. Many individuals who are not full-time students or "professional" musicians, composers, or songwriters are actively interested and involved in the study and/or creation of music.

Some believe that the prospect of private use in an era of digital technologies is so disastrous that the doctrine of fair use itself should be repealed. (Eric Fleischmann, "The Impact of Digital Technology on Copyright Law," *Journal of the Patent Office Society,* vol. 70, January 1988, pp. 5-26.)

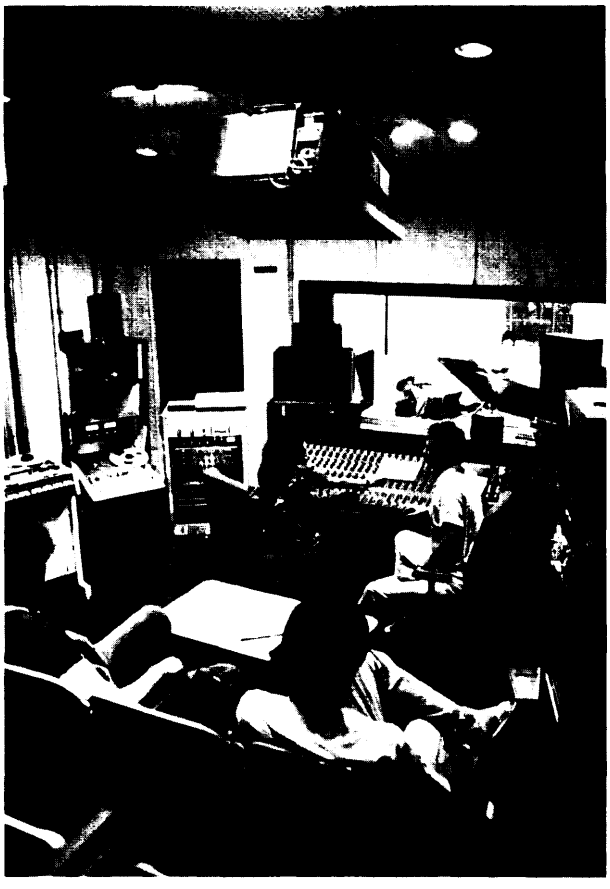

Credit: Berklee College of Music

M stu ts tu tempo ry ec g tec og

a f u k p fe nal mu an
mu ud n h hand apped C e a
fo who u d buy u h p al p d
u w u d ha bed ped and n ed

Recent Developments: SCMS

As this report was being published, an agreement between the recording industry and consumer-electronics manufacturers was announced. The parties agreed to seek legislation requiring a new DAT format to control multigenerational digital copying on DAT recorders (see details in box l-E). This technological copy protection, called Serial Copy Management System (SCMS), would restrict multigenerational copying of digital audiotapes copied from analog sources or copyrighted digital sources. However, first-generation, direct digital-to-digital DAT copies of CDs or other digital sources would not be restricted.

Compulsory Licenses

An alternative to prohibiting home copying entirely would be to grant some type of *compulsory license* to home copiers, with or without use of copy-protection technologies. A licensing system would also allow reciprocal arrangements with other countries for the payment of home-copying royalties.

One option would be to attach a fee to recorders. Alternatively, a compulsory-license-with-royalty could be combined with copy-protection devices in recorders, to allow "metered" copying.[61] Another option would be to attach a royalty fee to blank storage media. The option of a temporarily free compulsory license would preserve some flexibility

61 One proposed approach to this would be to se]] "debit cards, " carrying a preset value, which could be used to override copy-protect codes. The card would be inserted into the recorder, which would use a microprocessor to debit the card for the fee and record the identity of the material copied on the card or in the recorder's memory. If the "empty" cards were returned, the record of material copied could be used to distribute fees to the copyright owners. (OTA staITinterviews with recording-industry engineers, December 1988.)

For a description of magnetic-stripe or microchip "smart" cards and their uses in debit systems, see: U.S. Congress, Office of Technology Assessment, "Electronic Delivery of Public Assistance Benefits: Technology Options and Policy Issues," OTA-BP-CIT-47 (Washington, DC: U.S. Government Printing Office, April 19S8).

while establishing the legal principle of copyright proprietors' rights over private uses.

If the licensing approach were to be pursued, Congress would have to choose:

- where the royalty fees would be levied – on the blank recording media, on recorders, or both;
- how the royalty fees would be set–by whom and according to what standards; and
- how and by whom the revenues would be distributed.

There are a range of opinions on all of these issues. Several other countries have established home-copying royalty systems, and Norway and Sweden have each established a private-copying tax instead of a royalty system. In evaluating the appropriateness of these systems for the United States, political, legal, social, and market differences need to be taken into account (see ch. 5). Furthermore, some hardware and media might have multiple uses– e.g., DAT for audiotaping or computer data storage. This requires that even "narrow" options (e.g., a fee on media) must be considered in a broader technical context.

Levying the Fees

Fee on Recording Media–This approach has been followed in several countries, including Austria, France, Finland, West Germany, Iceland, Portugal, and Hungary; West Germany and Iceland also impose fees on recording equipment. None of the royalty schemes on recording media has been in place for more than a decade. Fees on the blank media are based either on a percentage of playing time, a percentage of the price, or per unit. Proceeds are distributed among the authors, performers, and producers of copyrighted recordings, based on distribution schemes developed by the individual countries (see table 5-1).[62]

Proponents of this approach consider that a fee on recording media is a more precise measure of how much copying is actually being done than a fee on the sale of the recording equipment. However, because media can be used for purposes other than unauthorized copying, it is not an exact measure. Some proposals have considered making distinctions between different types of recording media, such as tapes used for noncopyrighted material and those used for taping copyrighted music. A meaningful distinction by presumed use can be difficult to draw, however, since an audiotape meant to be used for lectures, dictation, etc. could just as well be used to copy copyrighted music. Distinctions based on different factors such as capacity, price, or quality have been suggested. OTA considers that the likely blurring of niche boundaries will make it increasingly difficult to distinguish between the various recording media available – for example, the same medium might be used to store copied music or computer data. Congress will have to be careful in crafting legislation to avoid being overly specific in using terms like "tape" or '(blank)' that create loopholes in the law,[63] especially in light of new storage technologies.[64]

---

[62] Proceeds from blank-audiotape levies in 1987 ranged from about $3.2 million in Finland to $15.3 million in West Germany. Figures from 1988 indicate that revenue from France's blank-tape levy amounted to $16.3 million.

63 For instance one way t. avoid th, fee might be t. sell tapes that were not completely blank but were intended to be recorded over,

64 Future innovations might enable consumers to make copies on computer disks, optical discs, microchips, etc.

Box I-E–Industry Agreement Concerning DAT

On July 28, 1989, representatives of the international recording industry and several consumer electronics manufacturers announced the outcome of a series of working group meetings to negotiate joint recommendations on technological means to limit DAT copying. A Memorandum of Understanding (MOU) was signed in Athens, Greece in June 1989, and subsequently ratified by the participating parties. According to a background paper prepared by the RIAA and EIA,

> "The sole purpose of the Memorandum is to agree on joint recommendations to governmental authorities –the U.S. government, the European Commission, the Government of Japan, and other governmental bodies – as to a format for DAT that accommodates public policy concerns of consumers, artists, and industry, The *only* respect in which this Memorandum has any force or validity is the obligation to support the agreed recommendations to governments, and to plan further meetings addressing possible future recommendations to governments. The Memorandum and the discussions leading to it do not address, and have not addressed, any private business conduct or decisions. "

The recommended format for DAT is based on a version of the Philips "Solo-Copy" method for limiting serial (multigenerational) copying (see ch. *2* for a description of technical alternatives for restricting copying). The format, now called Serial Copy Management System (SCMS), would allow DAT recorders to be used for direct digital-to-digital copying, but would restrict making digital-to-digital copies of the copies. As proposed for DAT, SCMS would not affect home tapingo n conventional analog recorders. However, only one additional generation of copies of DAT tapes copied from analog inputs could be made.

In addition to the International Federation of the Phonographic Industry (IFPI) and RIAA, 15 European and Japanese consumer electronics companies participated in the working group that developed the MOU: Fujitsu General Corp., Grundig, Hitachi Ltd., Matsushita Electric Industrial Co. Ltd., Mitsubishi Electric Corp., NEC Home Electronics Ltd., Philips International B. V., Pioneer Electronic Corp., Sanyo Electric Co. Ltd., Sharp Corp., Sony Corp., TDK Inc., Thompson Consumer Electronics, Toshiba Corp., and Victor Company of Japan Ltd. EIA was not a participating party to the MOU, but was represented in Athens as an observer, and subsequently endorsed the United States legislative goals recommended in the MOU. SCMS standards will be proposed to the International Electrotechnical Commission.

According to EIA and RIAA, the objective of the agreement in the MOU is "government implementation" of the recommendations -i.e., mandating implementation of an SCMS standard– worldwide. In the United States, the EIA and RIAA have (as of August 1989) agreed to ask Congress to consider legislation implementing the recommendations and to work jointly to support its passage. Absent legislation, the parties are not bound to implement SCMS.

Serial Copy Management System (SCMS)

SCMS controls "serial" digital copying on DAT recorders — copying second, third, and successive generations of DAT tapes from a first-generation DAT copy. According to an EIA/RIAA background paper, SCMS will allow any original prerecorded work (e.g., a record, tape, or CD) to be copied indefinitely onto different blank DAT tapes. However, SCMS will limit the number of digital-to-digital copies that can be made from the copies, unless the source material is both digital and "unprotected".

As proposed, the SCMS standard for DAT would be implemented with a special chip (reportedly under development). With SCMS, the DAT sampling rate would he the same as the CD rate, allowing direct digital copying of CDs. Although earlier consumer-model DAT recorders might be retrofitted with the SCMS chip once it became available, the earlier models operate with a different sampling rate and do not permit direct digital copying of CDs.

The SCMS chip would be programmed to read copyright coding information already in the digital subcode channels of digital recordings and broadcasts. These channels are separate from the music channels and include "category codes" indicating what type of digital device is being used as the source (e.g., a CD player, whose output is protected, or a microphone with an internal analog-to-digital converter, whose output is not protected) and "copyright flags" indicating whether or not the material is marked for copyright protection. DAT recorders with SCMS chips would use the combination of the category code and the copyright flag to determine whether copying

Continued on next page

would be permitted. If so, the DAT recorder would write appropriate copy-protection codes into the digital subcode channels of the DAT tape being recorded. For example, if the source material's category code indicated a ***digital source (e.g.,*** CD) and if it were marked for copyright protection, a code of "1,0" would be written onto the DAT copy as it was being made. Then, if a DAT recorder detected the "1,0" code on digital material, the record function would not operate. By contrast, if source material were being copied from a digital microphone and were not copy protected, the DAT recorder would write a code of "0,0" on the copied tape, and future serial copying would not be limited.

SCMS also limits the number of generations of copies that can be made of source material entering the ***analog inputs*** of a DAT recorder. Current technology does not permit identification of copyrighted material in the analog domain. Therefore, material (including analog cassettes, LPs, or radio broadcasts) recorded via the analog inputs would be marked with a copy-protection code of "1,1" in the DAT copy's digital subcode channel. One more generation of digital-to-digital copies could be made from this tape; the second-generation copy would be marked with a " 1,0" code and could not be copied on a DAT recorder.

Other Home-Copying Issues

The agreement to seek legislation mandating the SCMS standard for DAT leaves open the question of royalties (e.g., on blank tape and/or recorders) for home copying. According to an RIAA press release, the MOU states that the three European signatories acknowledge that they accept the principle of royalties and will not oppose efforts by the recording industry to secure legislation implementing royalties for private copying. The Japanese signatories acknowledge that the recording industry places extreme importance on royalties for copying that is permitted to continue following the adoption of any technical standards. All parties to the MOU agreed that the adoption of technical standards should not be relied upon as a basis for supporting or opposing royalties.

RIAA has announced that, although it continues to strongly support royalties to compensate for the DAT copying permitted by SCMS, it will not pursue royalties in the 101st Congress. RIAA has stated that it does intend to pursue royalties subsequent to legislation requiring SC! MS.

The signatories to the MOU have committed to discuss several other copying-related issues, including recordable and erasable compact discs (CD-R and CD-E) and development and implementation of SCMS in the analog domain.

SOURCES: RIAA, "DAT Agreement Reached" (press release), July 28, 1989; RIAA and EIA, "Agreement on Recommendations to Government as to DAT" and "The Serial Copy Management System (SCMS): How It Works" (background papers), July 1989, ***TV Digest, vol. 29, No. 36,*** Sept. 4, 1989.

If a home-copying royalty were attached to blank media, the consequences for home copying are unclear. Possible outcomes could include: no change in the amount of home taping taking place; a decline in sales of blank media, with consumers buying fewer tapes, but reusing them more often or becoming more selective in what they tape;[65] consumers buying prerecorded material with the intention of making more than one copy to trade with friends, thereby spreading the costs; and/or in the case of exemptions for certain types of tapes (i.e., tapes of lower quality), consumers opting to record music on tapes of inferior quality rather than to purchase higher-quality tape subject to the fee.

Fee on Recording Equipment – The rationale for this approach is that a fee placed on the sale of the recording equipment reflects the ownership of copying equipment. However, this would not reflect the number of copies actually made. Unless categories of hardware (or purchasers) were exempted, all purchasers of recording equipment would pay the fees, regardless of whether the equipment was used

'35 For example, many consumers listen to their recent purchases for about a month and then library them.

to record copyright music. This might be considered unfair by those who seldom or never use their recorders to copy prerecorded music.

For this type of royalty system, equipment would have to be classified according to use, whether as players or recorders. It would also be necessary to distinguish between recorders used for copying copyrighted material, such as music, and those used for recording non-copyrighted materials, such as lectures and dictation.[66] For "all-in-one" systems, in which all the components are sold together as one product, it would be necessary to decide whether the royalty fee would be levied on the whole system or only on the recorder.[67]

If a home-copying royalty were levied on recording equipment, several consequences for home copying are possible, including: no change in the amount of home copying; an overall decline in hardware sales; or a lag in the sales of new recorders, with consumers opting to retain their old recorders rather than purchase a new one subject to the levy.

Fee on Both Media and Recording Equipment– This approach has been adopted by such countries as Iceland and West Germany. Some proponents argue that a fee on both the hardware and the recording media is more appropriate, since both the hardware and the recording media are necessary for copying. They also argue that a more equitable return to the affected parties is ensured since both the manufacturers of the recording media and hardware will have to share in the payments to the rights owners. The levy would likely be passed on to consumers in the form of higher prices.

A royalty on media and equipment may give the impression that consumers are being double-charged. Such perceptions might motivate consumers to buy only limited quantities of recorders capable of making home copies, and to purchase players (as opposed to player/recorders) for the car, travel, etc.

Setting the Fees

Amount-A theoretical approach to determining the amount of a fee to place on the recording equipment and/or tape would be to attempt to determine a comprehensive estimate of the overall net financial impact of home taping on copyright holders. Any estimate of this sort, however, depends on assumptions, and different assumptions can yield a broad range of plausible (and sometimes implausible) estimates.

Three practical approaches used abroad for royalties on media are:

1. a flat fee, regardless of price or capacity;[68]
2. as a percentage of the price; and
3. based on the capacity (playing time) of the recording medium.[69]

In most countries where a royalty on recording media has been established., it is based on playing time, although the capacity of new media will vary depending on the type of material being stored (e.g., compact-disc storage of audio or full-motion video).

---

[66]This distinction might be more difficult than it appears, since a recorder typically used for recording noncopyrighted materials can also be used to copy music.

[67]Manufacturers might also think about deletingthe recording feature from "d-in-one" systems if the fee were based on the cost of the entire system.

[68]Some have criticized this approach on the grounds that the royalty on a tape of inferior quality willbe the same as that on one of superior quality and the latter is more likely to be used to tape recorded music.

[69]Some believe that the latter is most appropriate, since playing time is the best measure of how much home taping is being done.

Royalty fees on hardware could be based on a flat fee or as a percentage of the price of the recording equipment. A flat fee might be simpler to administer than one based on price. However, some argue a flat fee would be inappropriate because the royalty on an inexpensive recorder would be the same as that on one with more features, and the royalty will be reduced if it is pegged to the price of less-expensive recorders.

Special fees might be adopted for dual-cassette and dubbing machines that make tape-to-tape copies. If a royalty surcharge is placed on this type of equipment, the result maybe a decrease in the sale of dual-cassette recorders, as well as decreased sales of prerecorded **cas**settes. Home tapers might opt to buy more CDs and records and tape from them.

Incidence and Exemptions – Congress would have to decide whether home-copying levies would be collected from manufacturers or consumers. If the levies were collected from manufacturers, they will likely be passed on to consumers through higher prices. If the manufacturer were responsible for the fee, decisions will have to be made as to whether retailers will have to special order exempt tapes/equipment, and as to how royalty-exempt consumers will be able to recover the royalty. Unless there are provisions for exempt consumers to special-order tapes and/or equipment, everyone would be subject to increased prices at the point-of-sale.

If the consumer were responsible for the payment of fees, it would be necessary to decide how individuals will prove that they are eligible to receive an exemption. Would they also have to prove that they will not use tapes/equipment to copy copyrighted music? If so, how would they go about proving it? What would happen if a customer wants to buy tapes in bulk, and doesn't yet know whether



Photo Credit: Courtesy of Gene Bachero and *the* Casuals

Home musicians make practice tapes

he will use them to tape lectures or music? Would that individual be able to purchase royalty-exempt tapes/equipment at the retail store, or will he have to fill out a form to obtain a rebate? Either method would involve more work for both the retailer and the customer. The task of having to fill out additional forms and/or provide proof of exemption might deter some individuals from seeking reimbursement.

It has been suggested that exemptions be issued to professional users, to handicapped persons,[70] on exports, on equipment or tape found to be "unsuitable" for the home taping of music **on** the basis of "technical criteria" such as reproduction quality (i.e., business dictation machines and micro cassette tapes),[71] and on machines that are not designed to copy (i.e., microphone-only recorders and playback-only devices). If exemptions were given to "professionals," this term would have to be defined to indicate who qualified for exemption– home musicians, for example, may also use consumer-model recorders during practice sessions or to work on new

[70] If exemptions are made for handicapped persons, would they be issued to organizations representing them, or to individuals?

71 Some recorders, although not most suitable for recording copyrighted music, are nonetheless capable of doing so.

material. Additionally, special provisions for fair-use copying, such as partial exemptions from the royalty, would need to be considered.

Administering and Distributing Home-Copying Royalties

As discussed above, home-copying royalties could depend **on** the type of copyrighted work being copied (e.g., recorded music, television broadcasts, etc.) and/or the identity of the copier (e.g., the handicapped, students, members of the general public, etc.). The royalty fee might even be set arbitrarily low for some or all classes of users.[72] The question of how the royalty scheme should be administered and how royalty revenues should be distributed would have to be addressed.

Chapter 5 discusses proposals for the administration and distribution of audio home-copying royalties, including the provision proposed in the Home Audio Recording Act introduced in the 99th Congress. For this discussion, we proceed on the assumption that royalties for home copying should be claimed through efficient centralized collection/distribution societies, rather than by individual copyright holders making claims against manufacturers, importers, retailers, or consumers.

Administration –Administration of a home audio copying royalty might be assigned to an already-existing organization, such as ASCAP, BMI, SESAC **or** the Harry Fox Agency.[73] Other types of copying-rights organizations, like the Copyright Clearance Center, which collects and distributes photocopying royalties, might also be considered.[74]

ASCAP, SESAC, and BMI are performing-rights societies, so using this model would presume that patterns of copying and performance (namely, radio air play) are similar. The Harry Fox Agency collects mechanical royalties (based on sales), so that using its database as a basis for distribution would presume that patterns of copying and purchasing are similar and the best-selling works are the most copied. Both models (copying is associated with air play, copying is associated with sales) are arguable; it may be that the less popular or less accessible works are copied more, for convenience or because consumers do not value them highly enough to be willing to pay the retail price.[75] One potential advantage to using an existing society's structure is that the administrative expenses would tend to be lower, compared to starting an entirely new organization. The structures of these particular organizations, however, are such that recording companies and performers (who are not composers or songwriters) would have little say in their management.

Another possibility might be to expand the responsibilities of the Copyright Royalty Tribunal (CRT) to include determining and distributing home-copying royalties, but this would require additional staff and funding. Under the compulsory licensing provisions of the Copyright Act of 1976, the CRT (an independent agency in the legislative branch) is currently responsible for determining and distributing royalties from cable retransmission and public performances on jukeboxes, and for determining the royalty rates for phonorecords and some public broadcast transmissions. But cable retransmissions are relatively easy to monitor, compared with home copying.

---

[72] This would be somewhat analogous to the "health care" exception proposed during the 100th Congress to permit the unauthorized but noncommercial performance of audiovisual works for patients in health care facilities. See U.S. Congress, Congressional Research Service, "Videocassette Recorders: Legal Analysis of Home Use)" Douglas Reid Weimer, Jan. 10, 1989, p. 13.

[73] See ch. 5 for a description of these organizations.

[74] J. Alen, Copyright Clearance Center, personal communication, Apr. 28, 1989.

[75] The study's advisory panel members were of divided opinion on this.

A new private or public organization could be established. By starting fresh, all the beneficiaries could be given voice in the organization's management. There are two disadvantages to this approach: 1) startup costs would be higher; and 2) it would take time to set up the organization and its procedures. It might take some time before startup costs were met and the bulk of royalties were actually distributed. Moreover, setting up a new organization is not easy or trouble-free.

Whichever general approach (augmenting an existing administrative infrastructure or establishing a new one) were chosen, the source of operational funding would have to be determined – whether it was intended to be self-supporting (via overhead charges on collected royalties) or supported by appropriated funds.

Distribution – Distribution of audio home-copying royalties raises some questions:

Should the proceeds go as directly as possible to the persons and legal entities whose rights are being used and whose interests (it has been determined,) are being harmed by home copying? If so, then royalty revenues would be distributed in some fashion among established recording companies, songwriters and composers, music publishers, singers, musicians, studio personnel, etc.[76] But if Congress considers that a major reason to grant rights over private use is because of the harm to new talent (struggling artists or composers, new acts) and/or less popular genres, then special attention may be warranted for these classes of potential beneficiaries.

Should the distribution be based on sales, performances, both, neither? Basing the distribution on sales or air play maybe inexact. More importantly, Congress might consider that extra incentives (via these royalties) are more desirable for struggling or new talent, or for genres like classical music. This would, however, promote works by new talent at the expense of the established, or subsidize less popular material at the expense of material with a larger market.

Other countries with home-copying royalties have followed a number of approaches to the above,[77] and if Congress were to establish a royalty scheme for home copying, it might choose to reserve at least some portion of the proceeds to nurture new talent or certain types of works or performances, like classical or "new" music. If, for instance, the effect of home audio copying that concerned Congress the most was that it diminished market incentives for producing the work of *new* artists, then some home-copying royalties could be targeted to provide financial incentives for productions or performances that would not otherwise be attempted.[78] The Music Performers Trust Fund, for example, is a fund set

[76] For example, t. provide incentives to artists to continue to develop new material, it might be desirable to give a Portion of the royalty directly to the performing artist, rather than give a larger portion to the record company to allocate according t o contractual provisions. On the other hand, givinga larger share to the record company might give it more incentives to record new acts and material.

77 & ch. 5. In France, for example, proceeds from the audiotape tax are divided unequally among authors, Performers and producers. In Belgium, the proceeds from a proposed levy on blank tape would be split, with half going to artists, authors and recording companies, and the other going to support artists and cultural institutions in Belgium three language communities. In Iceland, proceeds from the levy on blank audiotapes are allocated to performing artists and producers, composers and writers, the performers' share is deposited into a fund to be used for the promotion of the profession, particularly for music schools. In Sweden, tape tax revenues are turned over to the government, which uses two-thirds for unspecified purposes; of the remainder, most is put into a cultural fund, with a small portion divided among the author, performer, and producer. In West Germany, royalties are collected on blank tape and on recorders. Revenues are distributed among the various collection societies for music authors, performers, and producers, and lyric authors, which then distribute royalties to their members,

[78] Although top recording artists, composers, and songwriters might object that this would deprive them of their due, there would seem to be at least some justification for such an action. The recording industry already relies on the large profits from their most successful releases to subsidize new releases, since the targeted monies would be used to finance new releases, at least some would flow back to the recording companies anyway,

up to foster and encourage the use of live music. For every recording sold, the recording company contributes to a fund to be used for the continuation of live public performances, such as performances in nursing homes, public concerts, or any other type of public performance where no admission fee is charged. The funds are allocated among individuals who participate in the performances.

Chapter 2

Technological Change and Home Copying

CONTENTS

	Page
INTRODUCTION	37
DIGITAL REPRESENTATIONS	44
EROSION OF NICHE BOUNDARIES	47
DIRECT ELECTRONIC DELIVERY	50
TECHNOLOGICAL COPY PROTECTION	52
Audio Recordings	56
Serial Copy Management System	56
CBS Copycode System	57
Video Recordings	60
Summary	61

Boxes

Box		Page
2-A	DAT: How It Works	40
2-B.	Analog Cassette: How It Works	41
2-C.	Digital Audio Tape	42
2-D.	How Compact Discs Work	45
2-E.	How Compact Discs Are Made	46
2-F.	Other Digital Formats Using CD Technology	48
2-G.	New Infrastructures and Services	53
2-H.	Transaction-Based Distribution Systems	54
2-I.	Systems to Copy Protect Sound Recordings	59

Chapter 2
Technological Change and Home Copying

INTRODUCTION

Copyright law defines the boundaries between *permissible and prohibited* uses of copyrighted works. These boundaries are based on copyright's intellectual property bargain,[1] tempered by the feasibility and efficiency of enforcement. Technology, driven by the social and economic objectives of its users, defines the frontiers of *possible* uses and feasible enforcement. Technological changes that substantially alter the nature and extent of possible uses, or the feasibility of enforcing prohibitions against certain uses, give rise to tensions between users and copyright proprietors.

Technological change as it relates to copyright presents a major challenge to government policymakers, who must continually seek to define and maintain the appropriate relationship among policy, the laws implementing it, and the consequences of technological change. While technology and the law are fundamentally interrelated, new uses of technology should not, in themselves, have the force of law.

New uses *of technology can, however, exploit persistent ambiguities in existing laws, and by making possible — or prohibiting — selected actions, they can have the effect of lawmaking.* This may be happening for copyright. There-

cording industry considers that the growth in and current prevalence of home audiotaping have created a situation in which persistent ambiguities in the law have been exploited to the point that consumers believe that they have a "right" to tape.[2] On the other hand, any industry agreements resulting in technological copy protections implemented in the works themselves and/or in recording devices would redefine "possible" uses and would effectively shift the boundary toward the prohibited. From the public's viewpoint, the result would be equivalent to a change in the copy-right law. Moreover, although home copying would be the intended target for these copy protections, they could potentially limit the doctrine of fair uses

The debate over home audiotaping, which prompted Congress to request this study, is a situation in which technological change has strained ambiguities in the current law to the point where copyright proprietors have petitioned for legislative relief from the projected consequences of new copying technologies. In this instance, new consumer products would enable users to make digital copies of copyrighted recordings in their homes, at a time when digital recordings (i.e., compact discs) were becoming increasingly important to record companies' profits. Multigenerational digital copies (i.e., "clones") could be produced with no loss of quality.[3] In support of

[1]The bargain is a balancing of social objectives: encouraging the production and dissemination of diverse new works (by providing economic incentives for creators via a limited monopoly) and encouraging widespread access to and utilization of works. See *Intellectual Property Rights in an Age of Electronics and Information,* OTA-CIT-302 (Melbourne, FL: Kreiger Publishing Co., April 1986), especially ch. 2 and ch. 7, for more on the intellectual property bargain between creators and the public, and how it is changing in an era of electronic information.

[2]This point was raised in RIAA commentson a draft of this report. (H. Rosen, RIAA, letter toJ. Winston, OTA, May 2, 1989. Enclosure with comments on draft ch. 9, p. 1.)

[3]Although copy-protection technologies would not necessarily prevent all copying under the doctrine of fair use, special Provisions and exceptions would have to be worked out to allow fair-use copying. Even so, transactional or "hassle" costs for individuals *would be* higher, perhaps discouraging some fair use.

[4]Another example is the debate over videocassette recorders and home videotaping, which is being reopened by the Motion Picture Association of America (MPAA). The MPAA is calling for technological means to prevent home recording of movies shown on pay cable, or delivered by premium satellite or pay-per-view services. (Jack Valenti (President/MPAA), "Viewpoints," *Television/Radio Age,* Feb. 6, 1989, p. 91.)

proposed legislation to introduce home-taping royalties or restrict home copying,[5] the Recording Industry Association of America, Inc. (RIAA) has argued that the technological change from analog to digital recording will greatly increase home copying, so as to seriously threaten the industry's economic viability. Considering that sound recordings have historically had inadequate copyright protection, compared with other types of works,[6] copyright proprietors (for both the music and the sound recordings) have called for Congress to enforce what they consider to be the existing boundaries of copyright.[7]

The legal status of home audiotaping and other types of private use is ambiguous, however (see ch. 3). Although the status of some specific private uses has been determined judicially, current legislation does not provide explicit guidance as to whether copyright proprietors' rights extend to noncommercial private uses. Many believe that they do not. Others consider that home audiotaping, at least, is noninfringing under the doctrine of fair use. From either of these perspectives, proposals to extend proprietors' rights can be regarded as a call for Congress to strike a new intellectual property bargain, in which unrestricted and/or uncompensated home copying of audio materials is deemed not (or no longer) to be in the public interest.

At the same time, some copyright proprietors are pursuing unilateral and/or cooperative industry measures to implement technological means for copy protection. Such protective measures would shrink the frontier of possible uses of works, which would in effect shift the boundary of permissible uses–including some fair uses as defined in the 1976 Copyright Law.[8]

The 1986 OTA report, *Intellectual Property Rights in an Age of Electronics and Information*,[9] broadly examined the impacts of new technologies on the enforcement of intellectual property rights, including the right to control reproduction of copyrighted works, the right to control publication and performance of works, and the right to control the making of derivative works. That report found that technological changes offer opportunities for social and private gain at the same time that they challenge the current business and legal environments.[10] For example, technologies that lower the cost and time required to copy, transfer, or manipulate information and intellectual property can make works more accessible, make them more valuable to

[5] See, for example, the *Home Audio* Recording Act, S. 1739, 99th Cong.; or H.R. 1384 and S. 506 in the 100th Cong.

[6] This viewpoint was presented by C. Sherman (Arnold and Porter, representing the RIAA) at the study's final advisory panel meeting on Apr. 24, 1989. Sherman also considered the distinctions in OTA's analysis of electronic-delivery -versus-performance (see below) to be "perilous" ones that proprietors of other types of works did not have to deal with.

[7] According to the RIAA, "... the music industry has consistently maintained that home copying is illegal undercurrent copyright law and has simply sought legislation to make copyright protection more than an empty right. " (H. Rosen, RIAA, letter to J. Winston, OTA, May 2, 1989. Enclosure with comments on draft ch. 9, p. 1.)

[8] For example, copying brief excerpts from one or more "technologically copy-protected" recordings, for the purposes of teaching or criticism, would be problematic.

The recording industry does not consider that technological copy protection would eliminate copying permitted under the doctrine of fair use and takes the position that legitimate fair uses should be preserved and that exemptions should and could be worked out. (H. Rosen, RIAA, letter to J. Winston, OTA, May 2, 1989. Enclosure with comments on draft ch. 9, p. 12.)

[9] OTA-CIT-302, op. cit., footnote 1.

[10] At this study's final advisory panel meeting on Apr. 24, 1989, some panel members reemphasized the challenges that new technologies present for the current copyright system, which they considered to be nearing obsolescence, but dauntingly complex to overhaul.

For a more complete discussion of technological changes and the enforcement of intellectual property rights, including impacts on print, music, video, and other media, see OTA-CIT-302, op. cit., footnote 1, pp. 97-123.

consumers, and make using them more convenient. These technologies can also make enforcing intellectual property rights more difficult, and may lower rights holders' expectations of economic returns. If so, this might reduce creators' financial incentives to produce new works. Furthermore, the 1986 report noted that enforcement of intellectual property rights will potentially be more intrusive, as copying, transferring, and manipulating works become private activities in the home.

The *Copyright and Home Copying* study focuses on one type of intellectual property protection – copyright — and one venue — the home. The study's empirical work examines the home use and/or taping of copyrighted audio materials and, to a lesser extent, video materials. The copyright issues raised by home audio- or videotaping are enmeshed with broader questions about the general status of private use, including home copying. Because the current copyright law gives little guidance on private use, especially whether private use is an infringement of copyright, the question remains whether the overall objectives of copyright are best served by granting copyright proprietors exclusive rights over home copying, including the rights to be compensated for and/or to prevent it.

Up to now, the courts have applied the doctrine of fair use, absent other statutory guidance, to make explicit but limited and niche-oriented determinations about home copying and other private uses of specific categories of copy-righted works. Leaving these determinations to the courts, as specific cases arise, has allowed Congress to avoid premature or short-lived copyright legislation, and has helped maintain flexibility in the face of changing technologies.

The confluence of current technological and business trends, however, may make an explicit congressional definition of the legal status of home copying more desirable to reduce legal and market uncertainties and to prevent de facto changes to the copyright law. These trends are:

- The movement to *digital representations* of music, video, and other types of entertainment and information available to consumers. With these come new digital recording technologies for home use, and more powerful means for home users to interact with and manipulate digital works, as well as to make derivative works.
- The *erosion of niche boundaries* used to categorize copyrightable works according to their content (e.g., audio, video, computer software) or physical format (e.g., audiotape, videotape, computer disc).
- The emergence of new *delivery infrastructures* to bring music, video, and other forms of information and entertainment into the home (e.g., fiber optic cable, pay-per-view, and interactive cable services).
- The efforts of some copyright proprietors (e.g., in sound recordings and motion pictures) to develop and implement *technical means for copy protection.*

Some industry stakeholders do not consider that the ambiguous legal status of home copying represents a "problem" requiring any additional legislation to deal with home audiotaping. In part, this position reflects the view that the doctrine of fair use is sufficiently adaptable to address home audiotaping, at least, and that Congress intended for the courts to use this "safety valve" in dealing with home copying.[11]

[11] Gary J. Shapiro, Electronic Industries Association, Apr. 28, 1989, letter to OTA with comments on draft ch. 5, pp. 1,5.

Box 2-A–DAT: *How It Works*

Digital audiotape's transport system (left) works just like that of a videocassette recorder. Once inserted in the deck, the cassette's protective lid opens and the tape is extracted and wrapped 90 degrees around the head-bearing drum. As the tape moves past the drum from left to right at 1/3 inch per second, the drum moves counter-clockwise at 2,000 rpm (middle). This combination yields a recording speed of 123 inches per second —65 times faster than today's analog cassette decks. Because the tape is held at an angle to the drum in a helical pattern, the drum's two magnetic heads write and read information in diagonal tracks across the width of the tape instead of longitudinally along its length, as in analog recording (right). This space-saving arrangement provides 2 hours of information on a matchbox-size cassette. Because each of the two heads is mounted at a different azimuth, the information-bearing tracks are laid down in an alternating pattern.

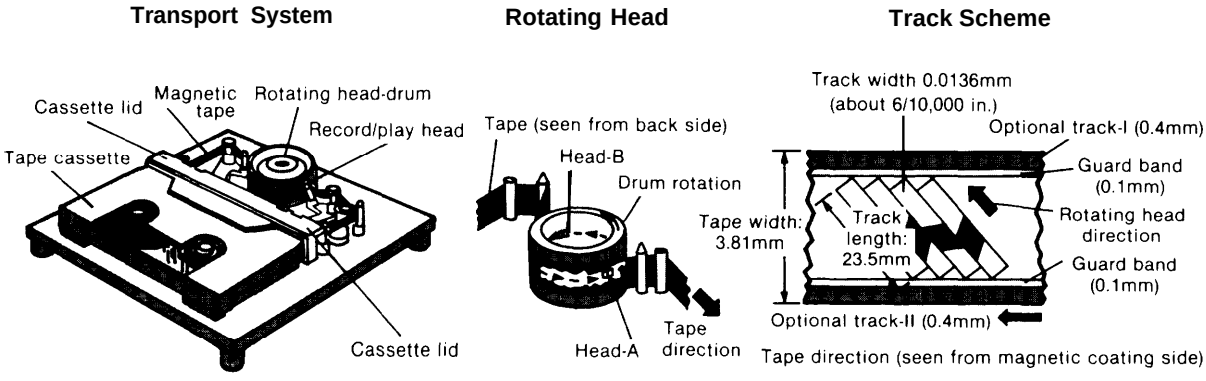

Reprinted from Popular Mechanics, July 1987.
Copyright The Hearst Corporation. All rights reserved.

Continued ambiguity about congressional intent and the legal status of home copying may, however, become undesirable, for two main reasons. First, the legal ambiguity gives rise to market uncertainty. As new digital formats and recording technologies develop, hardware and software producers will become even more interdependent: just as for computers and computer software, decisions about technical standards and formats made by one industry will critically affect the other.[12] Because of this mutual dependency, the market uncertainty will impinge on broader groups of stakeholders, including the public.

Continued uncertainty blurs market signals and raises business risks for hardware and software producers alike; pricing and output decisions are more difficult. Potential offerings of new products and services may be delayed or withheld; delays and/or limited markets have real costs for consumers and producers:

[12]Industry standards determine the compatibility and features of different hardware and/or software products. For more on industry standards and their role in determining markets, see U.S. Congress, Office of Technology Assessment, *Critical* Connections: *Communications for the Future, OTA-CIT-407* (Washington, DC: U.S. Government Printing Office, forthcoming).

Box 2-B–Analog Cassette: How It Works

In analog cassette recording, a nonrotating freed head enters the housing to press against the tape. The tape passes by the head at 17/8 inches per second, and separate tracks for the left and right stereo channels are recorded simultaneously along the length of the tape. When the first side is recorded, the cassette is flipped to record a second set of stereo tracks on the remaining width of the tape. In DAT recording, just like videotape, there's no need to flip the cassette.

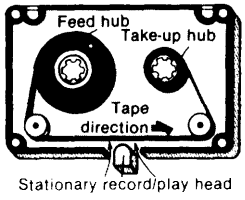

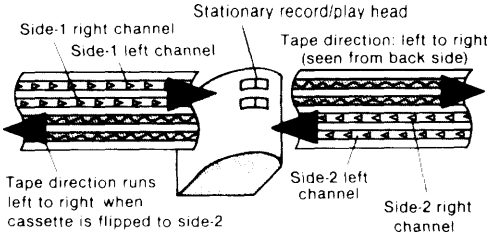

Reprinted from Popular Mechanics, July 1987. Copyright The Hearst Corporation. All rights reserved.

. In 1987, the RIAA threatened to sue the first manufacturer selling consumer-model digital audiotape (DAT) recorders in the United States. (See box 2-C.) Many consider that this threat is largely responsible for consumer-model DAT recorders being withheld from the U.S. mass market for the past 2 years. In late April 1989, one manufacturer began importing and selling modest quantities of DAT recorders (with professional features) in the consumer market. The firm reportedly expects to sell about 500 of the ($10,000) machines in the first year, while consumer models with more limited features typically sell for about $1,500 in Japan and Europe.[13]

The July 1989 Memo of Understanding (MOU) between the international recording industry and several consumer-electronics manufacturers (see box l-E) may eventually lead to mass introduction of DATs with copy-limiting features. However, early press accounts of reactions to the agreement indicated that hardware industry executives considered it unlikely that DAT recorders manufactured with the special features could appear on the market before spring 1990.14 Some copy-right holders and music publishers also expressed concerns that the legislative objectives did not include royalties.[15]

- Another emerging digital technology (recordable/erasable compact disc) faces similar uncertainties– some copyright proprietors have already branded it as "a worse problem" than DAT.[16] A Japanese firm announced sample-size shipments of write-once, recordable compact disc (CD-R) recorders in late 1988, with the initial market intended to be limited to professional applications as an editing tool for CD-ROMs or for small-lot production of CDs or CD-ROMs. To minimize copy-right-related controversies, another firm selling blank discs announced that it did not plan to supply

[13] Jean Rosenbluth, "Defying RIAA Threats of Lawsuits, Nakamichi Importing DAT players," *Variety,* Apr. 26- May 2,1989, p. 208.

[14] *TV Digest*, vol. 29, No. 31, July 31, 1989.

[15] *TV Digest*, vol. 29, No. 32, Aug. 7, 1989.

[16] Recording CD Worse than DAT--IFPI/RIAA," *TV Digest, vol. 28, No. 45, Nov. 7,* 1988; "Blank and Erasable CDs Prompt Fears of Piracy in Trade Group," *Variety, Nov.* 23, 1988, p. 96.

Box *2-C–Digital Audio Tape*

Rotary-head digital audio tape (R-DAT, usually referred to as DAT in this report) is a format with consumer-entertainment and computer data-storage applications. For consumer entertainment, the DAT format permits high-quality digital recording/playback of CD-quality music. The current DAT standard specifies two basic operating modes: a 44.1 kHz sampling rate (the same as for audio CD) for playback only, and a 48 kHz sampling rate for recording and playback. The 44.1 kHz mode can playback either prerecorded tapes made (in real time) from CD master tapes or prerecorded tapes made using high-speed contact printing. As of mid-1989, most consumer models operated at the 48 kHz rate, with 16-bit resolution; the 48 kHz rate was intended to prevent direct digital-to-digital recording from CDs. However, these tapes can themselves reduplicated directly, or "cloned," without further degradation or noise.[1]

Prerecorded DAT tapes and CDs usually have digital "copy-protect" flags– not part of the music itself –designed to be read by consumer-model digital recorders. These flags are intended to inhibit digital-to-digital copying, but to do so the hardware must be capable of reading and using the flags. Current DAT hardware is not, according to the RIAA.[2]

For computer data storage, DAT provides a high-capacity alternative to CD-ROM. A standard R-DAT cassette can store two encyclopedias' worth of data, the equivalent of 65 12-inch tape reels or 8 of the conventional "streaming tape drive" cartridges used for backup storage. One market niche for DAT storage is thought to be as backup for high-capacity, hard-disk personal computers and work stations, where floppy diskettes are impractical.

DAT tapes are about half the size of a conventional analog audio cassette and come in a sealed "box" similar to a videotape. The DAT recorder differs from an analog recorder in that (like the VCR) the record/play head rotates. Digital recording gives a high dynamic range (96 db) and audio frequency response similar to a CD (2-22 kHz).

Unlike the CD, DAT is a contact medium in which the tape must be wound and rewound repeatedly. Eventually, DAT tapes will degrade, and the use of DAT as an archival medium is in question by some, including the National Academy of Recording Arts and Sciences (NARAS). One of the market questions for DAT is whether consumers would accept a relatively expensive contact-playback medium, if they had no way to make backup copies of the tapes, when less-expensive CD players are already available for less than $200.

Many consider the RIAA's threat to sue the first manufacturer to sell consumer-model DATs in the United States largely responsible for delaying widespread introduction of DAT here. For example, the first consumer DAT recorders models had been expected in the United States in 1987. Car DAT players without recording capability have been available for $1,500 and up since mid-1988; prerecorded software, mainly classical and jazz, sells for $25 and up. With *no* end to the RIAA dispute in sight, alternative channels of distribution for DAT recorders opened up:

- The "gray market" for unofficial imports, selling for $1,600-$3)000. By early 1989, importers began planning for large imports of gray-market DAT recorders, despite the RIAA's threats to sue anyone importing the machines. One New Jersey importer expected to import 5,00010,000 DAT recorders by mid-1989 and sell them through audio stores; an affiliate sold about 600 DAT machines in 1988, primarily to recording studios and Government agencies, including the Department of Defense.
- "Professional" models selling for $2,500-$7,000, which have been legally imported and sold since 1987. The RIAA has not opposed DAT as a professional medium, despite the fact that, unlike consumer models, the pro units can record at 44.1 kHz (the CD rate).

By contrast, mid-1987 forecasts for DAT expected that the recorders would initially sell for about $1,500, but that the price would drop to around $250 in a few years as sales volume increased (earlier projections had expected consumer models to sell for $950-$1,250 in 1987). Conservative estimates of 1987 sales were in the 20,000-50,000 range, with reported forecasts of 220)000 DAT sales in the U.S. for 1988 and a cumulative total of 1.1 million units by 1990. Cassette prices were expected to be $9 for 60 minutes and $12 for 120 minutes.

[1]Under the proposed serial copy management system (SCMS) standard, new consumer-model DAT recorders would operate with a 44.1 kHz sampling rate, the same as the CD standard. However, copies of copies could not be "cloned."

[2]Under the SCMS standard, DAT recorders would recognize the flags.

Continued on next page

During the delay, some controversies have emerged concerning DAT as a professional tool. Tests conducted in 1988 by the Radio Technical Institute in Munich found that some DAT tapes made on professional and consumer-model machines were unsatisfactory in terms of machine-to-machine playback compatibility, recording quality, and sound storage. The Institute concluded that significant changes in the DAT format, such as increasing tape width and the size of the recording tracks, would be necessary to make DAT satisfactory for professional use.

In the meanwhile, a West German firm introduced the first DAT computer drive in March 1988; by the end of 1989 perhaps a dozen U.S. and foreign firms are expected to introduce DAT computer products. The DAT storage drives can hold about 1.2 billion characters of information, and search the data much faster than conventional tape-cartridge drives.

SOURCES: Steve Birchall, "Digital Audio Tape Issues and Answers, "Stereo ReviewMagazine, March 1987, pp. 56-59. Mark Brownstein, "Gigatrend Data DAT Drive Features QIC Interface," ***Infoworld,*** Aug. 14, 1989, p. 25. Patrick Cole, "The Dash for DAT Dominance, " Business ***Week,*** May 15, 1989, pp. 138H-138J. Michael Greene, "Permanence of New Disk Formats Should Cue Formation of a National Music Archive)" ***Variety Daily,*** Oct. 25, 1988. Wayne Greene, "The THOR Thpot, " CD ***Review,*** February 1989, pp. 88-86. John W. Merline, "What's All This about DAT?" ***Consumers' Research,*** June 1987, pp. 35-37. Edward Murray, "DAT's a Snap," Digital ***Audio,*** December 1988, p. 118. Mary Ann O'Connor, "DAT: The Controversy Continues, " ***Optical Information Systems Update,*** Aug. 1, 1987, pp. 4-6. Andrew Pollack, "New Storage Function for Digital Audio Tape," ***The New York Times,*** May 25, 1988, p. D6. Martin Porter, "DAT's NOT Ail, Folks!," GQ, September 1988, pp. 317-326. "Board Turns Digital Audio Tape into Backup Storage," ***Electronics,*** February 1988, p. 26. "The Gray Market Is Open for Digital Audio Tape," Electronics, February 1989, p. 60. ***TV Digest, vol.*** 29, No. 16, Apr. 17, 1989, p. 14.

them to the consumer market.[17] Nevertheless, the International Federation of the Phonographic Industry (IFPI) hasreportedly branded the planned launch as "deplorable," and stated that, "introducing the CD-R without putting copyright safeguards into place will undo any progress made on the anti-piracy and home-taping front during the last 3 years. "[18]

[The signatories to the MOU have agreed to meet to discuss copyright issues related to recordable/erasable CDs.]

Moreover, as niche boundaries erode, these effects can spill over from one industry to another:

. DAT cassettes can store much more computer data than regular computer-tape cartridges. (See box 2-C.) Some industry analysts expect DAT storage devices to account for about one-seventh of the computer tape-drive industry by 1993. Unit manufacturing costs for the DAT cassettes depend on the volume being produced, but because DAT is not yet a mass consumer-audio product, large scale economies are not yet being enjoyed. Because of the delays in introducing DAT as a consumer-audio format, some DAT tape-drive manufacturers are adopting a different DAT format intended primarily for computer data storage, and prices for data-storage DATs may be higher than if there were a common format.[19] Manufacturers have be-

[17]"CD Recorder Shipments Scheduled Next Month," ***TV Digest,*** vol. 28, No. 46, Nov. 14, 1988, p. 10; "CD-R Coming to U.S.?" TV ***Digest, vol. 28, No. 50, Dec. 12, 1988,*** p. 17. The blank discs would cost about $8.50 each.

[18]Pippa Collins, "IFPI Decries Launch of Japanese Recordable CD," ***Billboard, vol.*** 101, No. 1, Jan. 7, 1989.

[19]Patrick Cole, "The Dash for DAT Dominance, " ***Business Week***, May 15, 1989, pp. 138H-183J.

gun to introduce the data-storage DAT drives, which use 4-millimeter tape, compared to the 8-millimeter DAT cassettes for audio recorders.[20]

Continued uncertainty might even hinder the ability of copyright industries to adapt to new technical and market environments, if proprietors continue to seek and/or do obtain remedies based on their current ways of doing business. If legal uncertainties were reduced –by sanctioning, licensing, or prohibiting home copying— then businesses and consumers might better adjust to the new technical and legal environments.

Second, if technological means for restricting private copying of copyrighted works are implemented by the software and/or hardware producers, one result could be the virtual elimination of home copying, as well as some other types of copying now specifically permitted under the doctrine of fair use.[21] If this were to occur, it would be a de facto revision of the 1976 copyright law, but by industry and not Congress.[22] Technological uses would establish law, rather than follow it.[23] For some types of technological copy protection, implemented through voluntary intra- and inter-industry agreements, government approval or consent might be sought, to avoid antitrust problems. Antitrust reviews might not, however, be the best vehicles for setting copyright policy.

DIGITAL REPRESENTATIONS

Although audio compact discs, the first digital format for home-entertainment products, were introduced only a few years ago, digital representations of music, images, and other information have become central to the future of home entertainment/information products and services (see boxes 2-D and 2-E for more information about compact discs). New technologies continue to facilitate copying, manipulating, and transmitting digital information at declining costs. As the costs of these new technologies decrease, they are becoming available for home use, and thus may increase the scope, quantity, and quality of home copying.[24]

Some important differences between digital formats and analog formats for information storage, recording, playback, and transmission are:

- The resolution and signal-to-noise ratio are greater for digital than for analog recordings. For audio recordings, this gives a larger dynamic range, absence of "background hiss," and more brilliant sound quality. Digital filtering and error-correction techniques can be used during playback to "fill in" missing bits (somewhat equivalent to eliminating the effects of scratches and dust when playing

[20] David J. Buerger, "Emerald DAT Backup Device Can Store 2.2 Gigabyte," *Infoworld,* Aug. 21, 1989, p. 13; and Mark Brownstein, "Gigatrend Data DAT Drive Features QIC Interface," *Infoworld,* Aug. 14, 1989, p. 25.

[21] Some technological means might require transaction-based payments for home copying, this would be the technological equivalent of a fee-based compulsory license.

[22] See footnote 8.

[23] OTA is grateful to David Moulton for his comments in this regard. (D. Moulton, Berklee College of Music, letter to OTA, Aug. 5, 1988.)

[24] This strains the traditional concept of copyright as a private right, privately enforced, which was established when home copying techniques were relatively inferior to those used for commercial publication. Now, "publishing" can be a private act. For an extensive examination of the implications of technological change for copyright enforcement, see OTA-CIT-302, op. cit., footnote 1, especially ch. 4.

Box 2-D–How Compact Discs Work

The audio compact disc (CD), introduced in Japan in 1982 and in the U.S. and Europe in 1983, offers improvements over some of the shortcomings of longplay vinyl discs (LP records). While LP records can produce very high quality sound, they are subject to problems such as disc wear and damage, background noise, and "wow and flutter." These problems arise largely because the LP depends on a mechanical scanning system. The player's needle-stylus must be in direct contact with the grooves in the LP, where the analog sound is encoded. Dust, surface damage, warping, and variations in rotational speed will affect the quality of playback sound.

The CD technology uses a different approach. The digital information recorded on the surface of a CD represents sampling of an audio signal at the rate of 44.1 kHz. The CD player reads this digital information with a laser-optical scanning system that requires no physical contact. Further, the player's digital signal processing system is independent of the rotational speed of the disc. The result is very nearly perfect reproduction of sound that will not degrade even after repeated plays.

Information is recorded on a CD as a succession of tiny pits, each one 0.12 micron deep and 0.6 micron wide. Length of the pits varies from 0.9 to 3.3 micron. [Note: one micron = 0.000039 in.) A standard 5-inch CD, on which 60 minutes of music is recorded, would have about 3 billion pits. Each series of pits and "lands" (spaces between pits), represents a series of digital bits. The encoded information includes not only the "channel bits" that represent the audio information, but also the "subcodes" that govern the control and display functions of the player and the tracking signal that allows the player to follow and read the pit pattern.

The playback system for a CD is shown in the illustration below. Light beams from the semi-conductor laser (780 nanometer wavelength – in the infrared range), are made parallel by the collimator lens and then focused by the objective lens into a 1 micron spot that scans the disc. Light reflected from the reflective layer on top of the disc returns through both lenses to the beam splitter prism, which diverts it onto the photo detector. The photo detector can distinguish between light reflected from a land and light reflected from a pit. Light from the latter is slightly dimmer because the pit is approximately 1/4 wavelength closer to the lens, and thus it generates destructive interference.

The signals derived from the photo detector then go into a signal processing system that detects and corrects errors in the bit stream.

The CD-System

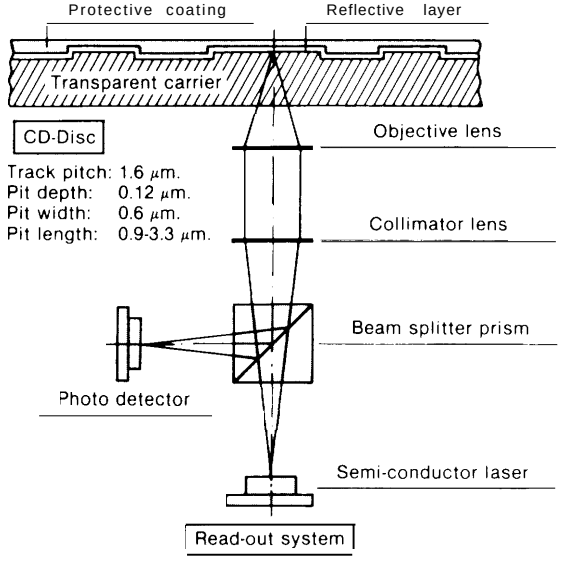

SOURCES: N. van Slageren, "Basics on Compact Disc: A Short Introduction," Nederlanse Philips Bedrijeven B. V., Electro Acoustics Division, Optical Disc Mastering, Eindoven, The Netherlands, various pagings, n.d.

For a brief history of the CD see Fred Guterl, "Compact Disc," in "Technology '88," ***IEEE Spectrum,*** January 1988, pp. 102-108.

Box 2-E–How Compact Discs Are Made

The production of compact discs (CDs) differs in a number of respects from the manufacture of long-play vinyl discs (LP records). There are two sizes of audio CDs in current use: the 5-inch CD, which can contain about 60 minutes of recorded music, and the 3-inch "single," which holds *2* or **3** songs. The steps for making them are outlined in the illustration below.

Program production – recording, mixing and creating a "master tape" of audio material — is essentially the same as for LP records. The master tape, containing two stereo audio channels, maybe in either digital or analog format.

In the tape mastering process, the master tape is converted from analog to digital or from digital to another digital format. Subcodes (indexes and other information needed for control and display functions of the CD player) are also added to the bit stream. The result, a digital "tape master" is used to produce the "disc master. "

Many of the following steps must be performed under "clean-room" conditions, because of the high level of precision required. In the disc mastering process, the information from the tape master is recorded optically (that is, using a laser) onto the surface of a glass disc which has been coated with photoresist. This surface is then developed, much as a photograph would be, producing the "disc master." In matrixing, the surface of the disc master is transferred to a nickel shell ("father"). The father is a negative from which a number of positive "mothers" are made. From the mothers, "sons" or "stampers" are produced. After suitable processing, these stampers are used for replication. The pattern on the surface of the stamper is used to make a pattern of pits on the surface of a transparent polycarbonate plastic disc. The plastic disc is then sprayed with a reflective aluminum coating, and a layer of protective lacquer. Finally, the center hole is punched out and the label is printed onto the protective layer.

The Production of CD-Discs

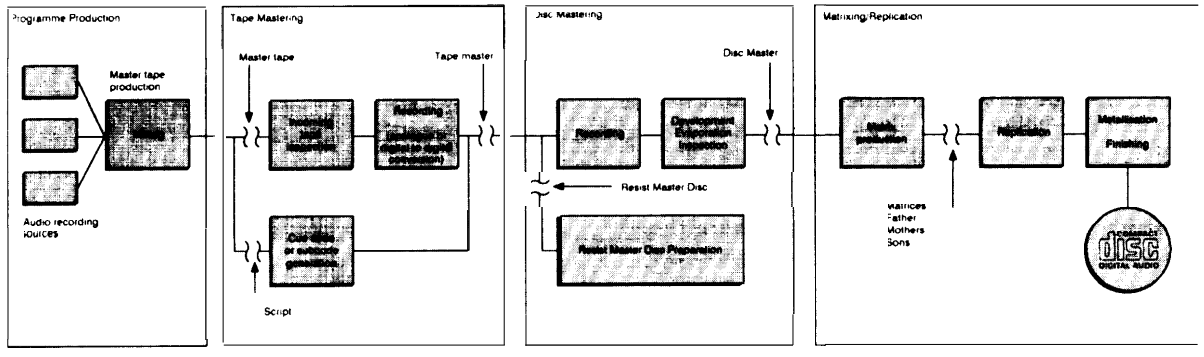

SOURCES: Material in this section is based on information from: N. van Slageren, "Basics on Compact Disc: A Short Introduction," Nederlanse Philips Bedrijeven B. V., Electro Acoustics Division, Optical Disc Mastering, Eindoven, The Netherlands, various pagings, n.d.

an LP record). Some playback methods for digital recordings do not require physical contact (e.g., record/stylus or tape/head), so those recordings will not suffer '(normal wear and tear" from repeated play.

- Multigenerational digital copies (of digital recordings) can be made with no loss of quality or clarity – copies are "clonable." With analog audiotaping, for example, the quality of successive genera-

tions degrades fairly rapidly. With digital-to-digital copying, however, the quality of successive generations can be indistinguishable from "originals."

- Computer- and/or microprocessor-based recording and playback equipment can capture, store, copy, and manipulate digital information (including music or images) more rapidly and cheaply than in the analog realm.
- Digital representations of music, images, and information "code" the content as a bit stream of ones and zeros, which can exist in electronic form, independent of any tangible, physical object. The bit stream representing an artistic work can be transmitted in electronic form (with no physical embodiment), or it can be stored in a new physical medium, without altering the essential characteristics of the work.[25] A physical embodiment is not essential for a digital work to be a "freed" piece of intellectual property: the work can be fixed in electronic form, and can be distributed electronically, rather than in a physical embodiment (see ch. 3).

In addition to DAT, some of the other digital (playback and/or recording) formats that are available now, or are expected to be available over the next several years, are highlighted in box 2-F.[26]

EROSION OF NICHE BOUNDARIES

Over the next decade, digital representations of creative works and other home entertainment will come to predominate. Consumers will grow increasingly accustomed to high-quality digital formats, and the ability to efficiently store, copy, transmit, and manipulate their contents (e.g., with digital video interactive, erasable/recordable digital media, or audio and video computer peripherals). As this happens, *niche boundaries* predicated on content or format (e.g., "audio" v. "video," or "audiotape" v. "computer media") will break down. These niche boundaries have already begun to erode significantly: the optical-disc formats of the 1980s–audio compact disc, compact disc video, compact disc interactive, and digital video interactive — have evolved from read-only, content-specific carriers to manipulable, audio/video/software operating systems. Moreover, new digital media like digital audiotape (DAT) and erasable/recordable compact disc (CD-E) will have multiple applications in business and the home, for example, computer data storage, as well as prerecorded images and music. Multipurpose hardware (i.e., computer-based player/receivers) will come into use.[27]

---

25 For example, the digital representation of a sound recording could be stripped from a compact disc, transmitted via modem to a personal computer with a peripheral DAT, and then played. The information content in electronic form duringtransrnission would be the same as in the disc and tape embodiments. Similarly, computer software or data can be transmitted from one computer to another; it is the same program irrespective of whether it is stored on a diskette.

26A longer-term example might be miniature "silicon recorders on a chip, " available in perhaps 10 years or so. All the digital circuits equivalent to those in a conventional CD player could be contained in a single chip, which would become a "player" without moving parts. Another chip with several gigabits of memory would carry digital music (approximately 4 gigabits of ROM could carry the contents of a conventional CD). (Heitaro Nakajima (Sony Corp.), quoted in *TV Digest*, vol. 29, No. 8, Feb. 20) 1989, p. 12.)

27 For example, Andrew Lippman (Associate Director/MIT Media Lab) has been quoted as saying in the context of high–density television, "forget TV sets. In 3 years there won't be any. Instead, there will be computers with high-quality display screens. Inside these computers there will be digital instructions allowing them to receive ABC, NBC, HBO, and anything we can dream up. " (*TV Digest, vol. 29, No. 6,* Feb. 6, 1989, p. 13.)

Box 2-F–Other Digital Formats Using CD Technology

In addition to the compact disc audio format, various other formats can be used to record music, images, data, and other information on a compact disc. The following section describes some of these now in use to encode audio, video, and computer material on optical discs. Until now, discs for home use have been for play only: information was recorded at the factory by a complex mastering procedure that could not be changed by the consumer. However, recordable and erasable/recordable CDs for home use are under development.

Compact Disc Video: Compact disc video (CD-V) is a laser disc format carrying digital video, as well as digital audio, tracks. A precursor, the analog laser disc, was first introduced in 1979, but its popularity was limited (in part, by the introduction of videocassette recorders).

CD-V discs come in 5-inch, 8-inch, and 12-inch sizes. The 5-inch CD-V "single" (the same size as a conventional audio CD) holds 5 minutes of analog video (e.g., a music video) with a digital soundtrack on the outer portion, plus about 20 minutes of additional CD-audio material. The current 8-inch version, called the CD-V EP, holds about 40 minutes of analog video and analog and digital sound (e.g., short films, cartoons, educational shorts), and the 12-inch, or CD-V LP, version holds up to 120 minutes of analog video with digital and analog sound (e.g., movies). Existing video disc players will play the larger versions; older ones play analog sound only and newer ones play digital sound. A different player is required for the single because the scanning sped is different. Combination, or "combi" players will play all three sizes, plus audio CDs; there also are dedicated players for the 5-inch CD-V singles and 5-inch audio CDs.

Compact Disc Interactive: The compact disc-interactive forrnat, or CD-I, was first announced in 1986. It is a specification for video, audio, software interfaces, and data on one 5-inch disc. The CD-I player (in reality, a personal computer with a special interface and TV monitor) will display still pictures, animation, or full motion video. CD-I also offers varying levels of audio quality for music and speech; the highest-quality music is comparable to that on an audio CD. Playing time depends on the combination of audio, video, and data on thedisc, as well as sound quality. One disc will hold about 74 minutes of digital audio sound, or 288 minutes of analog "mid-fi" stereo, or 19 hours of speech-grade monaural sound. Video and data storage greatly shortens playing time.

Digital Video Interactive: Digital video interactive (DVI) offers about an hour of digital full-screen, full-motion video, or else various combinations of full-motion video, still images, graphics, programming, digital sound and text. A frame of video television takes up 600,000 bytes, so conventional full-motion video at 30 frames/second corresponds to a data rate of 18 megabytes/second. A CD holding 648 megabytes of data could contain only about half a minute's worth of full-motion video. DVI uses computer data-compaction technology to compress digital video data, thus increasing the amount of information that can be recorded.

For recording, DVI uses a computer and proprietary data compression technique to analyze the video frame-by-frame. Only the relatively small portion of a frame that differs from the preceding one–the part actually conveying motion — is stored. For playback, the DVI microprocessor takes data off the CD-ROM in real time and "decompresses" it to recreate a high quality, moving image. This microprocessor can allowtheviewer to manipulate or modify the picture on the screen (e.g., rotate it, freeze a frame, zoom in, invert it).

At the end of 1988, beta tests of various DVI applications were being conducted; these include commercial adult and children's educational/training systems, government training systems, home information and shopping services, travel agency information, furniture point-of-sale and interior design tools, imaging and 3-D modeling systems, marketing research systems, and museum exhibits. In March 1989, a major computer manufacturer announced that it would endorse the DVI standard. Add-on modules are expected to be available by early 1990 that will allow DVI to be played on some personal computers.

Recordable/Erasable Compact Disc: As the controversy concerning large-scale introduction of consumer DATs continues, a new set of home recording technologies is emerging recordable and recordable/erasable compact discs.

The newest of these-the thermo-optical recordable/erasable compact disc, called THOR (Tandy High-Intensity Optical Recording) –was announced by the Tandy Corp. in April 1988. Different versions of play-erase-record CD systems had previously been announced (e.g., by Sanyo and Thomson SA), and others are reportedly under development in the United States and Japan. THOR technology is said to be compatible with current CD audio technology, so that the discs could be played in a conventional CD player (and vice versa).

Continued on next page

The read/write/erase technology is called CD-E. Blank CD-E discs will be blue, unlike conventional silver CDs. According to the developer, a "blank" THOR CD can be recorded over and over again, using a low-level recording laser to heat a thermally sensitive dye polymer material in the disc. Heating the dye changes its optical properties and creates the equivalent of the "pits" in a conventional audio CD. These pits are environmentally stable, enclosed in a protective layer to minimize the possibility of damage. To erase the disc, the same laser reverses the thermo-optical process, smoothing one or all of the pits. Tandy plans to make consumer-audio THOR recorders available in 1990, and also plans to introduce THOR computer data storage devices in 1991.

In 1987, Philips and Sony had announced plans for a CD mite-once player (producing discs that could not be erased and reused), aimed at professional markets for computer data storage or sound recording. The write-once technology is called CD-R; according to Philips, blank CD-R discs will be gold.

SOURCES: Robert P. Freese, "Optical Disks Become Erasable," ***IEEE Spectrum,*** February 1988, pp. 41-45. John Gosch, "From Thomson, a CD Player that Erases and Records, "Electronics, Mar. 17, 1988, pp. 42-46. Ronald K Jurgen, "Consumer Electronics, " in "Technology '88," ***IEEE Spectrum,*** January 1988, pp. 56-57. Peter H. Lewis, "Bringing Realism to the Screen, " ***The New York Times, Nov.*** 27, 1988, p. F9). John W. Lyons, National Engineering Laboratory, National Institute of Standards and Technology, letter to J. Winston, OTA Apr. 17, 1989. Ken Pohlmann, "DAT Hears Footsteps," ***Digital Audio,*** August 1988, pp. 16-17. Harry Somerfield, "CD Recorder Could Make Tape Obsolete," ***St. Petersburg Times,*** May 29, 1988, p. 3F. "Are Multimedia PCs around the Corner?", ***Electronics,*** May 1989, pp. 42-43. "Philips and Sony Design CDs That Can Record, " ***Telecom Highlights International, Nov.*** 11, 1987, p. 18.***TV Digest,*** vol. 28, No. 51, Dec. 19, 1988, p. 16. "Digital Video Interactive Technology, " (promotional materials) Intel Corp., 1988. Intel acquired the DVI Technology Venture from GE in 1988. DVI was originally developed at the David Sarnoff Research Laboratory (formerly RCA Laboratories). Tandy Corp. product literature, 1988. Tandy has not yet released the details of how THOR works.

Since enactment of the 1976 copyright law, questions about home uses and home copying — specifically, the congressional and judicial debates over home videocassette recorders (VCRs)[28] and the recent congressional debates over home audiotaping– have continued to be addressed on a niche-by-niche basis. The current law (Title 17, U. S. C.) contains special provisions pertaining to "sound recordings," "computer programs," and "motion pictures." The home audio- and videotaping debates of recent Congresses have included arguments for and against a tax or royalty on the media used to make copies — i.e., on "audio-" or "videotapes." Distinctions among these niches are blurring, however, and may well disappear.

So far, it has not been extremely difficult to classify blank media by prospective content/use: audio recorders, video recorders, and computers have used different, physically recognizable blank media. In addition, recording/playback equipment is generally recognizable by intended use: different equipment is generally used to record audio, video, etc.[29]

In the not-so-distant future, however, the same recorder and/or blank medium might be used for sound, images, or computer data. Therefore, durable "compulsory-license-with-fee" provisions (like a "tape tax" or "home-copying royalty") might be complicated by the inability to classify all the prospective uses of omni-purpose media and/or recorders. For example, a provision pertaining to "devices

[28]Videotaping issues were not putt. rest by the 1984 Supreme Court decision in ***Sony Corp. v. Universal City Studios, Inc.*** See ch. 3.

[29]There are exceptions: for example, pulse code modulation (PCM) adapters can be connected to a stereo system, digital radio receiver, or other audio source, to record audio on videotapes with a VCR. See: Bob Hodas, "Digital Recording Comes Home, " ***Digital Audio,*** July 1988, pp. 22-23, and Jeffrey A. Tannenbaum, "Adapters Allow Digital Taping Using VCRs," ***The Wall Street Journal,*** May 20, 1987.

and/or media used to copy sound recordings" could well apply to computers and erasable optical discs, or to a computer and its hard disk; a blank digital audiotape could be used to record music or to store computer data.

DIRECT ELECTRONIC DELIVERY

New infrastructures and business arrangements facilitating new methods of distribution for audio, video, and other entertainment and information products are being developed. The new infrastructures include transaction-based systems to deliver audio and video materials on demand (via optical fiber cable or satellite) and the prospect of higher-capacity communications channels to the home. Also, software producers, publishers, and providers are consolidating into totally integrated entities that manage functions from the creation of new artistic works to their final distribution. These developments could eventually make *direct electronic delivery* of audio, video, and other entertainment products to consumers feasible. As Canadian record producers noted in their 1987 study of home taping: "The development of centralized storage computers, satellite and/or interactive cables presages new methods of distribution of intellectual property."[30]

These new modes of delivery challenge or call into question some of the conventional concepts of copyright. In part for this reason, they may be slow to develop. In the meanwhile, representatives of the recording industry maintain that it would not be justifiable to delay or forego addressing copyright and home audiotaping, just because the music industry might eventually benefit economically from direct electronic delivery technologies: "It is not justifiable to allow advances in technology to undercut the financial health of the music industry based on assumptions and predictions that may never bear out."[31]

Regarding the development of electronic delivery, some copyright proprietors consider that technology is less important than the current copyright law. In particular, the recording industry considers that direct electronic delivery of sound recordings would require a (new) performance right for record companies. If the performance right were not granted, RIAA maintains, electronic delivery to consumers would not be economically viable, because other entities, such as cable companies, could offer the same services without the permission of, or compensation to, record companies.[32]

These are arguable conclusions. There is some ambiguity in the current copyright law, and it maybe that clarification might be sufficient to encompass copyright protection for direct electronic delivery to consumers. For example, it is not clear that a one-to-one, preordered and/or prepaid retail transfer of a copyrighted sound recording in electronic form constitutes a "performance," as opposed to a "delivery." Sections 106 and 114 of the current law affirm the control of copyright owners in sound recordings over "delivery" of copies in the form of "phonorecords"; it is the Section 101 definition of phonorecords as '(material objects" that is troublesome. It might be possible to extend the scope of Section 106 to include electronic delivery, without extending record companies' rights over (electronic) performances of the works.

30"A Study of Home Taping," Canadian Independent Record Producers Association (CIRPA), 1987, p. 51.

31H. Rosen, RIAA, letter to J. Winston, OTA, May 2, 1989. Enclosure with comments on draft ch. 9, p. 3.

32OTA staff interview with RIAA executive, Mar. 8, 1989.

Then, direct electronic delivery of copyrighted material by the copyright owner to a bona fide purchaser might (in principle, at least) be considered no more of a "public performance" than would be a delivery of physical material by mail. Rather, an electronic delivery could be considered an instance of distributing copies of the copyrighted work to the public for sale, under section 106(3), albeit in an unconventional manner.

Representatives of the recording industry, however, consider that, in practice, the distinctions between "performance" and "delivery" are seriously undermined by consumers' ability to make home copies of music distributed by cable or satellite services. They argue that the preceding discussion fails to capture the basic copyright problem in this area, because it ignores the widespread practice of home copying. Although customers who subscribe to cable and other music services are not licensed[33] to copy the music being performed, RIAA argues that they will make copies. Thus, the end result, especially for digital formats, will be indistinguishable from an electronically delivered "original" — except that the recording company would receive no compensation. According to RIAA, cable companies and other entities perform the recording industry's product without compensation to the industry and, in fact, "sell" that product in competition with the recording industry by offering a substitute for record purchases. To the extent that the performances are copied, RIAA considers that record sales are further displaced. Therefore, RIAA considers that the lack of a performance right makes existing rights over distribution unenforceable.[34]

Thus, it appears that the otherwise separate issues of home copying and performance rights can be linked by home copying practices. But creating a new performance right (and royalty) would be a more indirect means for addressing home-copying issues than other possible actions like a home-copying royalty or technological copy-protection.

Recent business decisions by some copyright proprietors may have placed them in a better position to move towards direct delivery. Motion picture studios are entering the home video rental and cable markets. Recording companies, most of which have music-publishing subsidiaries, are acquiring independent music publishers; their music-publishing activities earn revenues from licensing and synchronization royalties for soundtracks, commercials, etc., as well as from performance royalties for broadcasts and public performances.[35] The net effect is a trend towards very large, consolidated firms that can produce new works and distribute them through a number of channels. For example, the Time-Warner merger could unite

[33]While a cable company or other carrier may "distribute" performances electronically (by playing sound recordings for a mass audience), it does not have the right to sell buyers a license to make copies. For direct electronic delivery, the seller would need the right to license the buyer to make at least one copy of the material. The right to sell copies (or to contract with someone else, e.g., a manufacturer, to make copies for sale) is a right that section 106(3) grants exclusively to the copyright owner.

[34]H. Rosen, RIAA, letter to J. Winston, OTA, May 2, 1989. Enclosure with comments on draft ch. 9, pp. 2–3.

[35]For example, in early 1989 Thorn-EMI (which owns Capitol and EMI Records) announced plans to buy SBK Entertainment World, with its catalog of 250,000 songs, including copyrights formerly held by CBS Songs and MGM-United Artists. In 1987, Warner Communications Inc. (which owns Warner Records) bought the then-largest music publisher, Chappell-Intersong Music, Inc., with its catalog of 400,000 songs; Warner/Chappell now has a catalog of some 750,000 songs. (Jon Pareles, "Thorn-EMI Gets SBK for $337 Million," *The New York Times,* Jan. 6, 1989, p. D14.)

The acquisition of Chappell-Intersong Music, Inc. by Warner Communications produced the world's largest music publisher, Warner/Chappell; SBK-EMI is its closest rival. Warner/Chappell reportedly plans to grow by acquiring foreign music publishers, as well as smaller domestic catalogs. (Jean Rosenbluth, "Warner/Chappell Head Looks to Overseas Expansion," Variety, n.d., 1989, p. 123.)

the media fins' publishing, motion picture, record, cable programming, and cable system operation activities.[36]

Boxes 2-G and 2-H spotlight some of the new services and systems being developed to bring entertainment and information to the home.[37]

TECHNOLOGICAL COPY PROTECTION

Proponents of technological means for copy protection note that much of the legal tradition of copy-right was developed under the assumption that there was no technical "solution" to prevent private copying, and that enforcement of laws against private copying would be virtually impossible.[38] Therefore, the "solutions" historically sought by rights holders were private-copying royalties,[39] as opposed to unenforceable bans on private copying. New techniques that would prevent, or raise substantial barriers to, private copying are being developed. While these may be technically feasible, important – and possibly overriding– issues remain as to their political feasibility and social desirability. In considering proposals for technological means for copy protection, technical advances should be regarded as necessary servants of policy, rather than as sufficient reasons for setting policy.

Some issues raised by the prospect of technological means for copy protection have been noted earlier by OTA, in testimony concerning the copyright issues posed by DAT:

- *Technological approaches to preventing copying vary in effectiveness, and can be undermined or defeated by new techniques.* The extent to which consumers do seek to circumvent a particular technique will depend in part on the time and cost required to do so, as well as the perceived acceptability of the copy protection.
- *Technological approaches may require a greater role for government than more traditional ones like royalties.* For example, insofar as the technologies are susceptible to bypass or deactivation, the Government might wish to make such modifications illegal. Then, to enforce this prohibition, either government or private parties would have to conduct some form of search, inspection, or surveillance. In addition, if such laws controlled imports, this enforcement would also need to be taken into account.
- *Technological approaches may amplify the intermingling of international intellectual property and trade issues. As* the **1986 OTA report on intellectual property noted, attempts to resolve intellectual property problems are likely to be more effective when undertaken as** part

[36]Floyd Norris, "Time Inc. and Winner to Merge, Creating Largest Media Company," *The New York Times*, Mar. 5, 1989, p. A1. In addition to magazine and book publishing, Time Inc. 's lines of business include cable television and cable programming (Home Box Office). Warner Communications, Inc.)s lines of business include film, recorded music, cable television, and music publishing.

[37]For a more thorough treatment of new telecommunication infrastructures and opportunities, see OTA-CIT-407, op. cit., footnote 12.

[38]Computer software is an area where unilateral technical means for copy protection have longbeenavailable. Interestingly, most of the major computer software producers have abandoned copy protection for applications software packages, largely for marketing reasons: protected programs caused technical problems for legitimate users and were targets for hackers who bypassed the protection with a "code breaker" or "copy buster".

[39]See, for example, "A Technical Solution to Private Copying: the Case of Digital Audio Tape," Gillian Davies, *European Intellectual Property Review* (Opinion), vol. 6, 1987, pp. 155-158.

Box 2-G–New Infrastructures and Services

Technology is opening up new ways to deliver information and entertainment into the home. These new delivery systems may eventually replace, or at least supplement, sales of audio recordings, videocassettes, and preprogrammed computer discs. If information is delivered to the home in electronic form, people can use currently available technology to make their own temporary or permanent copies for future use.

Cable Systems: The Cable Communications Policy Act of 1984 (Public Law 98-549) prohibited telephone companies from operating cable television systems in their own regions, but telephone companies currently may own and operate cable systems outside their own regions or abroad. Fiber optic cable systems — whether provided by cable system operators, phone companies, or others — would offer enormous capacity, compared with conventional copperware telephone lines or the coaxial cabling traditionally used for cable systems. They could, for example, carry integrated services digital network (ISDN) voice telephone service simultaneously with high-quality audio and video (including high-definition television), and high-speed data services to private homes. Cost is a major barrier to installing the "last mile" of fiber to individual subscribers, and economic justifications for installing fiber to homes are often based on projected service offerings like cable TV or video on demand. Telephone companies and cable operators are examining fiber-to-the-home systems, and telecommunications and cable-equipment firms are developing fiber-based trunk and distribution system products for cable operators.

Digital Music Services: Even without fiberoptic cable, it impossible to deliver CD-quality sound to homes. A New York-based firm plans to introduce a cable radio service in 1989. The service will provide eight channels of digital music over conventional cable TV lines, plus an optional ninth channel offering "pay-per-play" reception of special concerts or album releases (for an additional fee). The firm is reportedly negotiating blanket licenses with BMI and ASCAP and having discussions with recording company executives, who have traditionally been unreceptive to pay-per-play home delivery systems. The service will offer digital audio in the CD-audio format, using proprietary technology to compress up to nine channels of 16bit, 44.1 kHz full-bandwidth digital audio, plus multiple data channels, to the regular 6 Mhz cable bandwidth. Cable companies would receive the encrypted signal via satellite and distribute it to their subscribers over regular cable trunk and drop lines. A special tuner (leased or purchased by the subscriber) would attach to the subscriber's stereo tuner and to the cable like an additional TV.

In January 1988, a California firm announced a planned music-only *digital radio service* offering 16 stereo channels of CD-quality sound, plus graphics/teletext, to subscribers via coaxial, satellite, and/or UHF-TV transmission. The scrambled signal, carried in the 6 Mhz TV bandwidth, would be received via a special tuner that would take the digital input and convert it to an analog output. The firm reportedly hopes to enter into agreements with recording companies for album distribution via a "pay-per-album" service. With this service, consumers (with addressable receivers) would be able to buy CD-quality music at lower cost. (They would order it by credit card via toll-free numbers and record it at home on DAT or conventional tape recorders.) Recording companies would receive a negotiated, "pure profit" licensing fee without having to bear manufacturing or distribution costs. Other than this special service, the firm plans to operate as a conventional radio station: playing singles and "announcing" the album and artist via a text generator display on the TV screen. As of early 1989, the firm was testing the service with a small subscriber base, and hoped to be "on the air" by late 1989. According to the firm's president, some of the smaller recording companies, without distribution arms of their own, had expressed interest in the pay-per-album concept, but as of February 1989 no agreements had been reached.

SOURCES: Lawrence Curran, "Two Firms Link Arms to Run the Last Mile," ***Electronics,*** February 1989, p. 95.

Fred Dawson, "GI Makes Major Moves into Fiber," Cablevision, Sept. 12, 1988, p. 12.

Steven Dupler, "N.Y. Cable Firm Sets 8-Channel Digital Service," Billboard, Feb. 4, 1989, p. 1.

Gary Slutsker, "Good-Bye Cable TV, Hello Fiber Optics, " Forbes, Sept. 19, 1988, pp. 174-179.

"Telcos Fight Back: Phone Companies Gear up for Battle to Get into Video Delivery," ***Broadcasting,*** Sept. 9, 1988, pp. 47-48.

"Cerritos: A Testing Ground for the Future," ***Telephony,*** Jan. 2, 1989, p. 1314.

TV Digest, Dec. 5, 1988, vol. 28, No. 49, p. 8.

Digital Radio Laboratories, Inc., Lomita, CA (promotional literature, 1988), and Doug Talley (Digital Radio Laboratories), telephone conversation with OTA staff, Feb. 10, 1989.

International Cablecasting Technologies, Inc. product literature and OTA staff discussions with T. Oliver and M. Seagrave (International Cablecasting Technologies), July 14, 1988.

Box 2-H– Transaction-Based Distribution Systems

Many consumers are already obtaining entertainment products for home use without purchasing a disc or tape. Rentals, pay-per-view, and telephone or cable jukeboxes represent additional ways to deliver entertainment to the home.

Video Rentals: Consumer spending on home video rentals has grown rapidly with the use of VCRs, going from just $350 million in 1981 to about $5.5 billion in 1988. According to projections by Paul Kagan Associates, the video rental business will be a $7 billion per year industry by 1990, even though VCR penetration seems to be leveling off. The trend is toward large video "superstores," each carrying 7,000 to 12,000 titles.

Videotape rental stores or chains originally operated by purchasing videotapes directly from the distributor. Because of growing needs for investment in inventory to compete, there is now some movement towards transaction-based rental arrangements where the rental store leases new releases from the distributor with a per-rental fee arrangement. This pay-per-transaction (PPT) arrangement reduces the inventory investment from the rental store and allows the distributor to share in the rental proceeds.

With the move towards PPT operations comes the development of computer-based support systems. In principle, these systems could be adapted to track electronic, rather than physical, transactions; computers and data storage facilities would replace the physical inventories of prerecorded videotapes.

Cable and Satellite PPV: In part to counter increased competition from video rentals, pay cable and satellite dish program providers are initiating transaction-based, pay-per-view (PPV) offerings. Although by early 1989 perhaps only 25 percent of cable households had the addressable cable converters required for PPV transactions, some industry experts expect that the remainder will have them by 1991, making the PPV business worth a projected $2 billion per year by 1996, compared with $60 million in 1987. PPV typically works by offering subscribers special events or movies not yet available on regular pay cable services. Proponents note that PPV offers more convenience than video rental, but others think that its real appeal is to movie buffs who want to see films at home before they are released on cassettes or pay cable.

While PPV accounted for less than 2 percent of the $13-billion per year cable industry, PPV offerings can be extremely profitable for individual program rights holders. For example, although only 600,000 households ordered the Tyson-Spinks boxing match (at $35 apiece), the fight produced greater revenues for promoters and rights holders than the 1988 Super Bowl. Movie studios earn an average of $250,000 for each film shown on PPV; their PPV earnings were $36 million in 1988 and are expected to reach $1 billion by 1997. Because of PPV's potential profitability, services that collectively transmit movies to cable operators for PPV have been established by a group of movie studios, a group of multiple-system cable operators, and a large cable programmer. The collective PPV services are transmitted by satellite to cable operators, who deliver them to homes equipped with addressable converters. Most of these require a phone call; to make PPV more user-friendly, some converters (in 8 percent of PPV homes) have "impulse technology," which allows the customer to order via pushbuttons on the converter unit.

Until recently, a major barrier to PPV was the lack of reliable technology for wiring homes and handling transactions and billing on a broad enough scale. In 1986, for example, only 2.1 million homes were wired to receive PPV. Now, the number of homes equipped to receive PPV services is approaching 10 million, and is projected to top 40 million by 1996, according to Paul Kagan Associates.

In the long run, PPV is thought to be video rental's closest competitor, especially in 5 to 10 years when addressable converters will be available to all households. One advantage of PPV is thought to be program diversity via "niche-casting": programs with narrow appeal can be profitably offered by PPV. For example, if only one percent of 20 million customers pay $20 to receive an opera, it will bring in $4 million – presumably, enough to produce and distribute it at a profit.

A service to offer satellite dish owners a variation of PPV is scheduled to begin in 1989, using a satellite to deliver the top 10 videos and other made-for-PPV programming 24 hours a day. Customers would order the programs by dialing a toll-free number to "electronically rent" a video. Also, interactive PPV offerings are under development; these w-ill allow viewers to select story options or play games, using a keypad.

Continued on next page

Telephone and Cable Jukeboxes: In GreatBritain a "telephone jukebox" service began in October 1987. The service allows consumers to call a special telephone number and listen to records or albums and order records directly. The system uses a combination of voice recognition, compact disc players, and personal computers on a local area network. The provider (a recording company) refers to the system as "the radio station at the end of the phone." Calls are billed by British Telecom; the minimum is $0.50 for 3 minutes. In late 1987, the service was averaging 1,000 calls a day.

In 1989, a Miami-bad cable network was deriving the bulk of its revenue from charging viewers to see a music video on demand – more or less. In this service, a selection of up to 1,000 music Video titles scrolls along the bottom of the TV screen; by dialing a local 976-number and punching in selected song codes, the viewer can order a particular title. However, like a conventional jukebox, the Video jukebox selections play in the order received, so there may be a 20-minute to several-hour wait. The charge is $2 for one video, $5 for three. The telephone company keeps a small portion and the service shares the balance with the cable operators. In early 1989, the video jukebox service was on nine cable systems, as well as a few low-power VHF affiliates. While the scheme maybe well suited for exploiting popular local niches (reggae in Miami, for example), and proponents hope that the technology will expand to local job and real estate classified, it faces problems finding enough cable systems with spare channels.

SOURCES: Mark Albright, "On Fast Forward: Video Superstores Bust into Tampa Bay Market," St. *Petersburg Times,* Mar. 20, 1988, p. I-l. (Article reports data from Paul Kagan Associates, Inc.)

Greg Clarkin, "Burnett and Virgin Vision Dare to be Different," *Video Business* (New York, NY), Sept. 30, 1988, pp. 38-40.

Rich Katz, "Pay-per-ViewMusic Videos: Will Viewers Ante up to Play Them?" Channels, January 1989, p. 16.

Francesca Lunzer, "New Developments (Movies by the Hour)," *High Technology Business,* November 1988, p. 8

Edmond M. Rosenthal, "Cable Operators Stage a Comeback for Pay-TV Services," *Television/Rudio Age,* Sept. 19, 1988, pp. 46-48.

Andrew L. Yarrow, "Pay-per-View Television Is Ready for Takeoff," *The New York Times, Nov. 14, 1988,* p. D9. (Article reports data from Paul Kagan Associates, Inc.)

"Computer Group Starts," *Video Business,* Sept. 30, 1988, p. 10.

"PPT: Money Hasn't Changed Everything after an Emotional VSDA," Staff Report, *Video Business,* Sept. 16. 1988, pp. 18-19.

Telephone News, vol. 9, No. 15, Washington, DC, Apr. 11, 1988, pp. 2-3.

> of a multilateral effort; unilateral imposition of trade restrictions might lead to retaliatory restraints on trade or to deteriorating international relationships. Also, there is a danger that if intellectual property policy is established in the context of trade issues, it may be skewed from its original goals.[40]

In comments on a draft of this report, the RIAA took exception to the latter two points, noting that "...it is incorrect to assume that a technological approach would require a 'greater role for government' than a traditional approach such as royalties," and that "...the integrity of intellectual property protection is essential to U.S. competitiveness in international commerce and we do not see why technological approaches to defending the integrity of copyright should be disparaged or rejected because they have some impacts on trade."[41]

As another issue, to the extent that technological approaches may make it more difficult to make noninfringing or fair-use copies,

"" Copyright Issues Presented by Digital Audio Tape," Testimony of Fred W. Weingarten and Linda Garcia, Office of Technology Assessment, U.S. Congress, before a hearing of the Communications Subcommittee of the Senate Committee on *Commerce, Science,* and Transportation, May 15, 1987.

•l H. Rosen, RIAA, letter to J. Winston, OTA, May 2, 1989. Enclosure with comments on draft ch. 9, PP. 4–5.

means would have to be developed to allow such copying. The recording industry takes the position that legitimate fair uses should be preserved and that exemptions (from technological copy protections) "should and could be worked out."[42] In practice, however, specific exemption procedures and/or techniques to circumvent technological copy protections, or to administer exemptions from or reimbursements of copying royalties, might be so complicated or cumbersome that some fair use would be discouraged.

Audio Recordings

New technologies have made copy protection possible for digital and, perhaps, for analog sound recordings. Machine-readable identification of copyrighted works (i.e., an electronic [circle-C] /[circle-P] marking) and specific identification of works (e.g., title and publisher) are now feasible.[43] Several technological copy-protection techniques have been developed or proposed to prevent or limit copying of digital recordings. The best known of these is the CBS Copycode system, designed to prevent digital-to-analog-to-digital or analog-to-digital copying on DAT machines.[44] Other techniques that have received some attention in the trade press are the "Unicopy" system proposed by the RIAA (that reportedly would allow one analog or digital copy of a CD to be made),[45] the "Solo-Copy" proposal by Philips (that reportedly would allow consumers to make DAT copies of a CD, but not to make DAT copies of those copies), and the "Stop-Cop" proposal by Kahn Communications (that reportedly would prevent DAT copying of copyrighted material on tapes or CDS).[46] None of these techniques can be implemented unilaterally by the recording companies; hardware modifications would also be required. For now, recording companies would need joint agreements with (mostly, overseas) consumer-electronics firms to effect technological copy protections.

Serial Copy Management System

A working group comprising representatives of Japanese and European hardware manufacturers and United States and European software associations (e.g., RIAA and IFPI) met in April, June, and July 1989 to discuss DAT and copyright issues. The working group agenda focused on technological means for preventing or limiting DAT copying of CDs and other digital sources.[47] In July 1989, RIAA, IFPI, and hardware manufacturers signed a MOU agreeing to seek legislation mandating a new DAT format called Serial Copy Management System (SCMS). SCMS would permit direct, digital-to-digital copying of digital recordings and broadcasts, but not digital-to-digital copies of these copies.[48] (For details about the agreement and SCMS, see box l-E.)

---

[42] H. Rosen, RIAA, letter to J. Winston, OTA, May 2, 1989. Enclosure with comments on draft ch. 9, p. 2. The RIAA comments did not detail specific exemption procedures.

[43] OTA staff interviews with RIAA Engineering Committee, Dec. 6, 1988.

44 The Copycode system is designed to prevent copying of an audio signal that enters the DAT as an analog signal. The method is not intended to stop, and does not prevent, direct digital-to-digital copying. (John W. Lyons, National Engineering Laboratory, National Institute of Standards and Technology, memorandum to OTA, Apr. 10, 1989, comments on draft ch. 9.)

[45] As described in *TV Digest,* Feb. 22, 1988, vol. 29, No. 8, p. 14.

[46] *TV Digest*, vol. 28, No. 6, Feb. 8, 1988; *TV Digest, vol. 29, No. 29,* July 17, 1989, p. 15.

[47] *TV Digest*, Mar. 20, 1989, vol. 29, No. 12, p. 16; Shig Fujita, "Hardware Firms, Labels Closer to Accord on DAT," *Billboard*, Apr. 1, 1989, pp. 1,83.

[48] The main barrier to direct digital-to-digital DAT Copying of CDs-different sampling rates — would be eliminated. DAT recorders with SCMS would make only one additional generation of copies made from analog sources.

The MOU agreement to implement SCMS is not binding on the parties unless legislation is passed. The RIAA has maintained the position that Federal legislation is essential to implementing any agreed-on technological solutions, because such agreements, absent legislation, would raise serious antitrust concerns.[49] Also, the Electronic Industries Association (EIA) and RIAA note that legislation would be needed to make the agreement binding on manufacturers not participating in the working group.[50]

CBS Copycode System

In an earlier attempt to resolve the home audiotaping controversy generated by the prospect of DAT recorders coming into widespread home use, legislation was proposed in 1987[51] requiring that DAT recorders sold in the United States befitted with a copy prevention decoder so that suitably "coded" material could not be copied. The Copycode system, developed by CBS Records, was the basis for the proposals:

> The Copycode system "codes" audio recordings by removing a narrow band of frequencies from the audio signal; this is referred to as "putting a notch" in the signal. The DAT recorder would contain a decoder to sense the presence of the notch; when it was detected, the recorder would be disabled, preventing copying. The intent was to prevent copying, without noticeably degrading the sound quality of the recorded audio signal. The analog Copycode encoder had logic circuitry used to determine whether to encode the audio signal, based on its signal levels near 3840 and 2175 Hz. This logic circuitry would switch the encoding notch filter on and off, presumably to prevent notching of the audio signal when it might be more noticeable. The notch was a narrow band of frequencies in the vicinity of 3840 Hz, which lies between the highest B-flat and B on the standard piano keyboard. This frequency range is well within the range of normal hearing for young adults; musical instruments like pianos, synthesizers, piccolos, and bells produce fundamental notes in the encoding notch.[52]

Those opposing this legislation argued, among other things, that the notching could seriously degrade the recorded sound (compared with the unnotched version), that it might produce false positives (i.e., refuse to record unnotched materials), and that it would be relatively easy to circumvent. Copycode's proponents strongly disagreed with these arguments. To resolve this technical dispute, Congress requested that the National Bureau of Standards (NBS, now the National Institute of Standards and Technology) study a specific implementation of the Copycode system. NBS received two recorders and encoders from CBS, along with proprietary descriptive material that was kept confidential. Part of the testing was done by a subcontractor specializing in psychoacoustic measurements. Two stakeholder groups — the RIAA and the Home Recording Rights Coalition (HRRC) – agreed to fund the NBS test.

NBS was asked to answer three questions:

1. *Does the copy prevention system achieve its purpose to prevent DAT machines from recording?*

   NBS found that it did not achieve its stated purpose. Although it prevented copying notched material much of the

@H. Rosen, RIAA, letter to OTA, May 2, 1989. Enclosure with comments on draft ch. 9, p. 5.

[50] *TV Digest*, VO]. 29, NO. 31, pp. 10-12.

[51] H.R. 1384 and S. 506

[52] See U.S. Department of Commerce, National Bureau of Standards, National Engineering Laboratory, "Evaluation of a Copy Prevention Method for Digital Audio Tape Systems," NBSIR88-3725 (February 1988), ch. 2. The material in this section is based on the NBS report.

time, it also exhibited false positives (refused to record unnotched material) and false negatives (recorded notched material). NBS studied 502 tracks on 54 CDs, and found false positives for 16 tracks on 10 discs.[53]

2. *Does the system diminish the quality of the prerecorded material?*

   NBS concluded that, for some listeners and some selections, the encoder notching produced discernible differences between notched and unnotched recordings. Although the effects were fairly subtle for some selections, for others subjects could hear differences.[54]

3. *Can the system be bypassed, and, if so, how easily?*

   NBS found that the copy prevention system could be bypassed easily; NBS engineers designed and implemented five different circuits to bypass the copy prevention system. According to NBS, these circuits were simple and would be easy to construct for about $100 each.[55]

After the NBS test results were reported and published, the Copycode legislation was withdrawn.

Generic Approaches to Preventing Audio Copying[56]

After discussions with the RIAA Engineering Committee, the OTA staff requested more information on technical approaches to copy protection, and on ways to implement them.[57] To identify the range of technically feasible alternatives to prevent or limit copying, the information summarized below was provided in April 1989 by the RIAA Engineering Committee. Neither the Engineering Committee nor the RIAA intended the information outlined below as an endorsement of any particular system or approach.[58]

According to the RIAA Engineering Committee, copy-protection systems could be designed to prevent copying of prerecorded and/or broadcast material, to limit copying, or to allow copying with remuneration (see box 2-I). Copy-protection systems of these types might be implemented in the analog domain, the digital domain, or both.

For example, copyrighted materials might be identified via an *analog baseband signalling system*. By identifying materials in the analog domain, the copyright-identification information in a digital recording could not be suppressed by using analog channels in a recorder (see discussion of analog circumvention below). The copy-protection signal would be contained within the spectrum of the recorded music (or background noise) and would be inaudible. According to information provided by the RIAA Engineering Committee, efforts are ongoing to develop a system of this type.

Copyrighted materials could also be identified in the *digital subcodes* currently in (digital) recordings. If these markings were recognized by recorders, they could be used to provide protection from direct digital-to-digital copying. But this type of copy protection

---

[53]NBS, Op. cit., footnote 52, P. 44-48.

[54]NBS, op. cit., footnote [5]2! 49-64.

[55]NBS, Op. cit., footnote 52, P. 65-71.

[56]Material in this section summarizes information provided by the RIAA Engineering Committee. (H. Rosen, RIAA, letter to J. Winston, OTA, Apr. 17, 1989 (enclosure); H. Rosen, RIAA, letter to J. Winston, OTA, Jun. 2, 1989 (enclosure).)

57J. Winston, OTA, letter to H. Rosen, RIAA, Dec. 12, 1988.

[58]H. Rosen, RIAA, letter to J. Winston, OTA, Apr. 17, 1989 (enclosure).

Box ***2-I–Systems to Copy Protect Sound Recodings***

Option 1: Prevent copying of original prerecorded and broadcast material ("original copying"). To do this, the original copyrighted recording would be encoded with a digital flag or an analog baseband signal. A detector in the recorder would sense the code indicating that the material was copyrighted and would then disable the recording function.

Option 2: Limit Copying.

a. Limit **the amount of original** copying-This type of system would limit the number of copies of prerecorded and broadcast material that could be made on anyone recorder. It could operate in the digital or analog domain. Each prerecorded source would have the catalog number and time code or track number encoded in a digital subcode or baseband signal. When the prerecorded or broadcast source material is copied, the code would be entered into a nonvolatile, cyclical memory in the recorder. The recorder would only be able to record a particular selection once (until the recorder's memory was filled and reset, several thousands of copies later).

b. Prevent serial copying-This type of system would allow an unlimited number of copies to be made from the original prerecorded material, but would not allow copies to be made from copies. In the digital domain, copies of copyrighted materials would be marked with a digital flag. The recorder would recognize the flag (indicating that the material to be copied was itself a copy) and no additional copies of the copy could be made. In the analog domain, this system could operate with a baseband signal indicating that the work was copyrighted.
IOTA Note: The SCMS format corresponds to this option in the digital domain.]

Option 3: Allow unlimited copying with remuneration.

a. Debit card system– This type of system would allow unlimited copying but would use prepaid debit cards to provide remuneration to copy-right holders for each copy made. It could operate in both the digital and the analog domains. Recorders would be equipped with a debit card reader, and the original copyrighted recordings would be encoded with a digital identification code and analog baseband signal. To copy a copyrighted work, the debit card would have to be inserted and left in the machine for the duration of the recording; otherwise, the machine would fail to record. Noncopyrighted works could be copied without a card. The recorder's card reader would deduct a fee from the debit card each time a track was recorded. When the card's value was used up, the consumer would need to purchase a new card to make more copies. Cards might be sold at record stores or other consumer outlets; revenues would be distributed to copyright holders, less a commission for the dealers. Cards could be disposable, but if the reader could record information on the card itself (as on a D.C. Metro fare card) and if consumers were given incentives to return the cards, they could be used to provide information about the material copied or the hardware used.

b. Two-tiered blank tape levy– For this sort of system, blank digital audiotape would be classified into two categories – one that could be used to copy copyrighted material (and would carry the levy) and one that would not. For example, tape carrying the levy might be printed with white stripes on the nonmagnetic back. The recorder would have a simple diode light detector that would look at the tape back as it passed around the DAT recorder's helical scan drum. Prerecorded material would be encoded with a digital flag or baseband signal. Attempts to copy material with the copyright code would fail unless the recorder's light detector indicated the proper output from the striped tape.

SOURCE: RIAA Engineering Committee, April 1989. Material provided for information only, to identify the range of technical alternatives to prevent or limit copying, and not as an endorsement of any particular system or approach.

could be circumvented by passing the material through a digital-to-analog (D/A) converter. Digital or analog copies of the converted signal (without the digital subcodes) could then be made. Such *analog circumvention* presents a technical problem in designing copy protections for prerecorded and broadcast digital sources. According to the RIAA Engineering Committee, to limit this circumvention, one (legislative) alternative would be

to eliminate analog inputs on digital recorders. This would force (copy-protected) direct digital-to-digital copying, or the use of a separate analog-to-digital (A/D) converter to COPY. To prevent the latter, the purchase of such A/D converters might be prohibited, except for professional use. Alternatively, specialized A/D converters that would generate a copyright flag could be mandated. Another option would be require A/D converters or analog inputs on digital recorders to be designed so as to reduce the quality (signal-to-noise ratio) of the analog signal. This would penalize circumvention with copies of lesser quality.[59] Another option, not yet technically feasible, would be to identify copyrighted materials via an analog baseband signal, as described above.

Video Recordings

The *home video* industry, with sales and rentals of prerecorded videotapes of movies, cartoons, sporting events, and the like, developed around the use of home videocassette recorders (VCRs). Ten years ago, the studios did not foresee the benefits of home video for the motion picture industry. Indeed, in their attempts to prevent the introduction of VCRs during the Sony case, studio representatives argued that the VCR would necessarily cause the demise of the entire motion picture industry. As VCR use burgeoned, however, the studios set up home-video arms to produce and distribute prerecorded videocassettes. By the mid-1980s, movie industry revenues from videocassette sales (often, sales to rental stores) equaled their revenues from box office receipts.[60] By 1988, the studios saw the profitability of rentals and observed that they did not appear to cause a decline in box office receipts.[61] Subsequently, they began to diversify into pay-per-transaction (PPT) video rentals (see box 2-H).

At about the same time, the motion picture industry began to consider establishing new barriers to VCR recording of pay cable and pay-per-view (PPV) programming, video rental's major competitors.[62] In a speech before the **1989 Winter Consumer Electronics Show, Jack Valenti, President of the Motion Picture Association of America (MPAA), urged the electronics and motion picture industries to agree on technological means of copy protection for videotapes and movies delivered by pay cable,** PPV, and premium satellite services.[63]

---

[59] H. Rosen, RIAA, letter to J. Winston, OTA, Apr. 17, 1989 (enclosure); H. Rosen, RIAA, letter to J. Winston, OTA, Jun. 2, 1989 (enclosure).

[60] LINK Resources data cited in *Technology and the American Economic Transition: Choices for the Future,* OTA-TET-283 (Washington, DC: U.S. Government Printing Office, May 1988), p. 268.

[61] According to Jack Valenti (MPAA), "the more a person watches movies on a VCR, the more that person is drawn to viewing a movie in a theater." Valenti reportedly attributes the rise in movie attendance by the over-40 age group to home VCR viewing. (*Billboard*, Jan. 21, 1989, pp. 7, 94.)

[62] According to Nielsen Media Research, although VCR usage is rising, pay and basic cable taping is declining as a proportion of VCR use. For the first quarter of 1987, Nielsen's data show that recordings from pay and basic cable constitute 9 and 5 percent, respectively, of all VCR tapings; for the first part of 1988 the figures were 7 and 4 percent, respectively. However, the total number of tapings during these periods increased, from an average of 13 per month to 14 per month. (Catherine Stratton, "Cable Taping Down, VCR Usage Rising," *Multichannel News,* Sept. 12, 1988, p. 24.)

[63] According to Valenti, "... In the long term best interests of both industries and the paying public, prerecorded videocassettes as well as movies delivered via pay cable, pay-per-view, and satellite premium services must be made copyproof." (*Television/Radio Age*, Feb. 6, 1989, p. 91.)

Earlier MPAA concerns over unauthorized duplication of prerecorded videotapes have made some VCR product innovations problematic. For example, when one U.S. company announced plans to market dual-deck VCRs in 1984, the motion picture industry's representatives raised such furor that their introduction was halted. Foreign manufacturers declined to produce them after being approached by representatives of the motion picture industry.[64]

The company filed suit against MPAA and eight VCR manufacturers; the case was reportedly settled in early 1989.[65] Another example is a new home video product that combines a VCR with a personal computer and an artificial intelligence system. The enhanced VCR can automatically tape shows matching a profile of the household's viewing interests, then play them back via remote control. The system works by linking individual units to a central computer via telephone lines; each unit scans TV listings and selects shows to be taped. Because the system uses "at least two" VCRs, however, it potentially raises concerns about its use for unauthorized duplication of prerecorded tapes.[66]

Some commercial videotapes are manufactured using a copy-protection system that adjusts the gain signals being recorded. If this tape is copied on a home VCR, the gain signals on the copy are further attenuated, to the point where it produces unstable images when played. But some "booster cables" or "video stabilizers" sold, ostensibly to improve picture quality when viewing tapes, could be used to circumvent copy-protection techniques like this.[67] A new copy-protection technique intended to "code" movies, sporting events, and other copyrighted material shown on pay cable and/or PPV services is undergoing laboratory and market tests. The technique reportedly works by fluctuating the per-frame transmission rate of the film to distort copies made with a home VCR. The developer hopes to introduce processed, or "coded" films on a nationwide basis later in 1989.[68]

Summary

Technological advances spurring the growing use of home recording devices have substantially changed the nature and extent of possible home uses of copyrighted material. Policymakers are now faced with a need to define the appropriate balance between the consequences of technological change and copyright law. The next chapter will analyze the legal aspects of home copying.

---

[64] *TV Digest*, vol. 27, No. 26, June 29, 1987, p. 13.

[65] *TV Digest*, vol. 29, No. 10, Mar. 6, 1989, p. 10. The firm, Go-Video, has reportedly received $1,8 million in settlements from manufacturers and plans to market the double-deck VCR in 1989. (TV *Digest*, vol. 29, No. 8, Feb. 20, 1989.)
According to MPAA, Go-Video agreed to insert anti-copying devices in all its dual-deck machines. (Jack Valenti, "Peace Treaty Offered between Electronics, Entertainment Interests," *Television/Radio Age,* Feb. 6, 1989, p. 91.)

66 The SmarTV system, introduced by Metaview Corp., is initially being offered at $6,000, and is projected to sell for less than $1,000 in 2t03years. (Tom Bierbaum, "RecordingTVFare Without TouchingEithera Video Machine or a Tape," Variety, Feb. 1-7, 1989, p. 52.)

67 For example an advertisement in The *New Yorker* (Jan. 23, 1989, p. 101) offers a "digital video stabilizer" to eliminate "video copyguards, color shifts and distortion s." According to the ad, the device, available for about $50, "is not intended to copy rental movies or copyrighted tapes that may constitute copyright infringement. "

[68] Eidak Corp. product literature (Cambridge, MA:1989).

Chapter 3

Legal Aspects of Copyright and Home Copying

CONTENTS

Page

CONSTITUTIONAL BASIS FOR COPYRIGHT LAW 65
Definition of Copyright 65
Copyright Clause . . . . 900* *e. O * * * @ * * * * * o . * * . * * * 65
COPYRIGHT LAW OBJECTIVES 66
THE DEVELOPMENT AND CURRENT BODY OF COPYRIGHT LAW . . . 67
ANALYSIS OF HOME RECORDING 70
The Sony Case .....,*..,***,**.....***..***,**..*.*.....***.* 70
Home Use of Recoding Equipment 72
THE INTELLECTUAL PROPERTY SYSTEM AND HOME COPYING 75
Concept of Intellectual Property 75
Statutory Concept of Intellectual Property 75
Recent Technological Developments 76
COMPARISON OF THE AMERICAN INTELLECTUAL PROPERTY SYSTEM WITH OTHER INTERNATIONAL COPYRIGHT SYSTEMS . 78
The United States 78
Great Britain 81
Canada 82
France *.*. *o. ..oo*. .*** ..** ... o....**...*.*.....*...*...*** 83
Summary .**o "*** O**oe. .*** . . . . . .**.*****.* 84
CHANGES TO TRADITIONAL AMERICAN COPYRIGHT CONCEPTS . . . 84
International Protection of American Intellectual Property 84
Artists' Rights ..** ***. *.. **m..**..,.**.....,*.*******.*.*.,.* 86

Chapter 3
Legal Aspects of Copyright and Home Copying

CONSTITUTIONAL BASIS FOR COPYRIGHT LAW

Definition of Copyright

American copyright is a constitutionally sanctioned and legislatively accorded form of protection for authors against unauthorized copying of their "original works of authorship" (17 U. S. C., Sections 102, et sec. (1982)).1 These works include literary, dramatic, musical, artistic, and other intellectual works. The copyright owner is given the exclusive right to use and to authorize various uses of the copyrighted work: reproduction, derivative use, distribution, performance, and display. Violation of any of the copy-right owner's rights may result in an infringement of copyright action. However the copyright owner's rights in the work are neither absolute nor unlimited in scope, however.

Copyright Clause

The U.S. Constitution grants Congress the power to regulate copyrights. This authority is contained in the "copyright clause," which provides:

> Clause 8. The Congress shall have Power . . . To promote the Progress of Science and the useful Arts, by securing for limited Times to Authors and Inventors the exclusive Right to their respective Writings and Discoveries. (U.S. Constitution, art. I, sec. 8, cl. 8)[2]

Much of the structure and basis for American law is derived from its British legal antecedents. After the introduction of the printing press in England in the late 1400s, the Crown's first response was to control what writings were printed or copied. The earliest British copyright laws were enacted in the 1500s to promote censorship by the government in cooperation with a monopolistic group of printers known as the Stationers' guild.[3] This system collapsed when the company failed to exercise discretion as censors, but used its monopoly power to set high prices. Parliament's response in 1695 was to allow the Stationers' copyrights to expire, but this resulted in a period of anarchical publication. In 1709 Parliament responded to the situation by enacting legislation known as the Statute of Anne. This statute granted a copyright to authors, as opposed to printers, for a period of 14 years. The copyright was renewable for an additional 14 years if the author was still alive. After the expiration of the copyright, the writing became part of the public domain, available for the use of anyone. This first modern copyright law became the model for subsequent copyright laws in English-speaking countries.[4]

---

[1] See: Harry G. Henn, ***Copyright Primer (New*** York, NY: Practicing Law Institute, 1979), p. 4.

[2] It is instructive t. consider th, significance of the exact language contained in Clause 8. The use of the word "writings" signifies that there must be some permanence in the actual form of expression or some specific articulation that can be ascertainable either directly or through some mechanism. This form of expression is more concrete and definite than basic ideas. "Author" refers to the creator of the "writings" and indicates that the writing must be the author's unique and individual work, not taken from another source. The concept of "exclusive right" indicates that the rights accruing from copyright ownership repose solely with the owner of the copyright, who may not necessarily be the creator of the "writing." Congress has dealt with the aspect of "limited times" in different ways over the years. In its most recent enactment, the 1976 Copyright Act, Congress determined that "limited times" is the life of the author plus 50 years. These concepts and the scope oftheircoverage have been subject to judicial review and interpretation. (See: David Nimmer and Melvin B. Nimmer, *Nimmer on Copyright (New York, NY:* Matthew Bender, 1988), vol. 1, ***sec. 1.03 -1.08.)***

[3] See: U.S. Congress, Office of Technology Assessment, ***Intellectual Property Rights in an Age of Electronics and Information,*** OTA-CIT-302 (Melbourne, FL: Kreiger Publishing Co., April 1986), pp. 34-36.

[4] Ibid.

Congress' constitutional grant of copyright regulation is more restricted than its English antecedent concerning both the subject of copyrights and the period of time for which copyrights are granted. The subject matter of American copyright covers the "writings" of authors. Under the American copyright system, the authors' exclusive rights in their works are granted for a period of time, after which they revert to the public domain. This American approach to copy-right embodies a duality of interest: the stimulation of intellectual pursuits and the property interests of the copyright owner. These competing concepts have been a central issue in the development, implementation, and interpretation of American copyright laws.

COPYRIGHT LAW OBJECTIVES

A fundamental goal of copyright law is to promote the public interest and knowledge– the "Progress of Science and the useful Arts." A directly related copyright objective is the promotion and the dissemination of knowledge to the public. Although copyright is a property interest, its primary purpose was not conceived of as the collection of royalties or the protection of property; rather, copyright was developed primarily for the promotion of intellectual pursuits and public knowledge. As the Supreme Court has stated:

> The economic philosophy behind the clause empowering the Congress to grant patents and copyrights is the conviction that encouragement of individual efforts by personal gain is the best way to advance public welfare through the talents of authors and inventors in Science and the useful Arts.[5]

Therefore, the congressionally mandated grant to authors of the limited monopoly is based on a dualism that involves the public's benefits from the creativity of authors and the economic reality that a copyright monopoly is necessary to stimulate the greatest creativity of authors. A direct corollary to this concept is that the grant of a monopoly would not be justifiable if the public did not benefit from the copyright system. Melvin Nimmer observed that the Framers of the Constitution regarded the system of private property as existing per se for the public interest. Therefore, in recognizing a property status in copyright, the Framers extended a recognition of this public interest into a new realm.[6] Thus, policy arguments that equate copyright with royalty income, or theories that assert that copyright is necessary in order to secure royalty income, run counter to this theory and appear to be inconsistent with the intent of the Framers.

The Supreme Court is well aware of these competing values and expressed its recognition in the 1984 *Sony* case:

> As the text of the Constitution makes plain, it is Congress that has been assigned the task of defining the scope of the limited monopoly that should be granted to authors or to inventors in order to give the public appropriate access to their work product. Because this task involves a difficult balance between the interest of authors and inventors in the control and exploitation of their writings and discoveries on the one hand, and society's competing interest in the free flow of ideas, information, and commerce on the other hand, our patent and copyright statutes have been amended repeatedly.[7]

The concept of copyright presents a seeming paradox or contradiction when considered within the context of the First Amendment freedom-of-speech guarantees: while the First

[5] *Mazer v. Stein, 347* U.S. 201, 219 (1954).

[6] Nimmer, op. cit., footnote 2, vol. 1, sec. 1-32.1.

[7] *Sony Corp.* v. *Universal City Studios, Inc.* 464 *U.S.* 417, *429* (1984).

Amendment guarantees freedom of expression, it can be argued that copyright seems to restrict the use or dissemination of information. It can be argued, however, that copyright, to the degree that it stimulates expression and encourages writing and other efforts, furthers First Amendment expression values by encouraging the quantity of "speech" that is created. In attempting to resolve these conflicting interests, the courts have adopted a test that weighs the interests of freedom of expression and the property interests of the copyright holder to arrive at an acceptable balance.[8] An extensive body of case law has been developed that weighs and counterbalances First Amendment concerns and the rights of the copyright holder.[9]

Hence, the American copyright system is based on two competing interests: intellectual promotion and property rights.[10] Combined with these factors is the First Amendment freedom-of-expression concern. Courts have balanced and assessed these seemingly conflicting elements, and Congress has considered them in enacting copyright legislation.

THE DEVELOPMENT AND CURRENT BODY OF COPYRIGHT LAW

After severing political ties with Great Britain, the former American colonies sought means to secure copyright laws. In 1783, the Continental Congress passed a resolution encouraging the various States to enact copyright legislation. All of the States except Delaware enacted some form of copyright statute, although the various State laws differed greatly .11 Because of the differences in the State copyright laws and the ensuing difficulties, the Framers of the Constitution, notably James Madison, asserted that the copyright power should be conferred to the legislative branch.[12] This concept was ultimatel$_y$ adopted, and Congress was granted the right to regulate copyright. (Art. I, sec. 8, cl. 8).

The First Congress in 1790 enacted the first Federal copyright act.[13] This legislation provided for the protection of the authors' rights. Commentators have written that the central concept of this statute is that copyright is a grant made by a government and a statutory privilege, not a right.[14] The statute was substantially revised in 1831[15] to add copyright coverage to musical compositions and to extend the term and scope of copyright. A second general revision of copy-right law in 1870[16] designated the Library of Congress as the location for copyright activities, including the deposit and registration requirements. This legislation extended copyright protection to artistic works. The third general revision of American copy-right law in 1909[17] permitted copyright registration of certain types of unpublished works. The 1909 legislation also

[8]Nimmer, op. cit., footnote 2, vol. 1, sec. 1.10.

[9]See: *Harper & Row, Publishers, Inc. v. Nation Enterprise, 471* U.S. 539 (1985).

[10]The Recording Industry Association of America, Inc. (RIAA) does not discern a tension between these interests. The RIAA contends that the availability of copyright protection stimulates the creative process and protects the copyright owner's property interest in the product of the creative process. The RIAA believes that the two factors are mutually reinforcing, not antagonistic. (H. Rosen, RIAA, letter to J. Winston, OTA, May 2, 1989, enclosure with comments on draft ch. 5.)

[11]Lyman Ray Patterson, *Copyright in Historical* Perspective (Nashville, TN: Vanderbilt University Press, 1968), p. 183.

[12]Ibid., pp. 192-193.

[13]Ch. 15, 1, 1 Stat. 12. See: OTA-CIT-302, op. cit., footnote 3, p. 64.

[14]Patterson, op. cit., footnote 11, pp. 198-199.

[15]4 stat. 436.

[16]Act of July 8, 1870, c. 230, 16 Stat. 198.

[17]Act of Mar. 4, 1909, c. 320, 35 Stat. 1075.

changed the duration of copyright and extended copyright renewal from 14 to 28 years. A 1971 amendment extended copyright protection to certain sound recordings.[18] The fourth and most recent overhaul of American copyright law occurred in 1976, after years of study and legislative activity.[19] The 1976 legislation modified the term of copyright and, more significantly, included the fair-use concept as a limitation on the exclusive rights of the copyright holder.

Throughout the evolution of American copyright law, the central driving force was the desire to keep legislation in pace with technological developments that affected the dissemination of knowledge.[20] As the U.S. Supreme Court summarized recently in the Sony copyright decision:

> From its beginning, the law of copyright has developed in response to significant changes in technology.... Indeed, it was the invention of a new form of copying equipment – the printing press– that gave rise to the original need for copyright protection.... Repeatedly, as new developments have occurred in this country, it has been the Congress that has fashioned the new rules that new technology made necessary.[21]

The 1976 Act set out the rights of the copyright holder, which include: the reproduction of works in copies or phonorecords; creation of derivative works; distribution of copies of the work to the public by sale, rental, lease, or lending; public performance of copyrighted work; and display of copyrighted work publicly (17 U. S. C., sec. 106 (1982)). The statute does, however, specify certain exceptions to the copy-right owner's exclusive rights that are noninfringing uses of the copyrighted works. These exceptions include the "fair use" of the work (17 U. S. C., sec. 107 (1982)), reproduction by libraries and archives (17 U. S. C., sec. 108 (1982)), educational use (17 U. S. C., sec. 110 (1982)), and certain other uses.

A clear understanding of the fair-use exception is of extreme importance, as the concept of "home use" appears to be a judicially created derivative of the fair-use doctrine. This doctrine has been applied when certain uses of copyrighted works are defensible as a "fair use" of the copyrighted work.[22] It has been said that this doctrine allows the courts to bypass an inflexible application of copyright law, when under certain circumstances it would impede the creative activity that the copyright law was supposed to stimulate.[23] Various approaches have been adopted to interpret the fair-use doctrine. Some commentators have viewed the flexibility of the doctrine as the "safety valve" of copyright laws. Others have considered the uncertainties of the fair-use doctrine the source of unresolved ambiguities. Some commentators contend that the fair-use doctrine has been applied prematurely at times, such as in the case of "home use," where the doctrine is used as a defense to a claim of infringement. They

---

[18] Public Law 92-140, Oct. 15, 1971, 85 Stat. 391.

[19] Public Law 94-553, Oct. 19, 1976, 90 Stat. 2541, codified at 17 U.S.C. sec. 101, et seq. (1982).

[20] Richard Wincer and Irving Mandell, *Copyright, Patents, and Trademarks: The Protection of Intellectual Property* (Dobbs Ferry, *NY:* Oceana Publications, 1980), p. 25.

[21] 464 U.S. 417, 430-431 (1984).

[22] Before codification of the "fair-use" exception in the 1976 copyright act, the fair-use concept was upheld in a common law copyright action in *Hemingway v. Random House, Inc., 53* Misc.2d 462,270 N.Y.S. 2d 51 (Sup. Ct. 1967), *aff'd on othergrounds 23* NY.2d 341, 296 N.Y.S.2d 771 (1968). The common law concept of "fair use" wasdevelopedover manyyears bythecourtsofthe United States. See, for instance, *Folsom* v. *Marsh, 9* F.Cas. *342 (N. 4901)* (C.C.D. Mass. *1841)* : *Mathews Conveyor Co. v. Palmer-Bee Co., 135* F.2d 73 (6th Cir. 1943).

[23] See *Harper & Row, Publishers, Inc.* v. *Nation Enterprises*, 471 U.S. 539 (1985); *Iowa State* University *Research Foundation, Inc.* v. *American Broadcasting Co.*, 621 F.2d 57 (2d Cir. 1980).

claim that the application is premature because without a clear delineation or mandate of rights over private uses, it is uncertain as to whether any infringement had ever occurred.[24] The judicial interpretations of the fair-use doctrine discussed below have a situation in which there exist concurrently the statutory concept of fair use — "the law" — and the "judicially creatd" or case-law derivatives of fair use, such as the concept of "home use."

In codifying the fair-use exception in the Copyright Act of 1976, Congress did not formulate a specific test for determining whether a particular use was to be construed as a fair use. Rather, Congress created statutory recognition of a list of factors that courts should consider in making their fair-use determinations. The four factors set out in the statute are:

1. the purpose and character of the use, including whether such use is of a commercial nature or is for nonprofit educational purposes;
2. the nature of the copyrighted work;
3. the amount and substantiality of the portion used in relation to the copyrighted work as a whole;
4. the effect of the use on the potential market and value of the copyrighted work (17 U. S. C., Sec. 107 (1982)).

Congress realized that these factors were "in no case definitive or determinative" but rather "provided some guage [sic] for balancing equities."[25] It appears that Congress developed a flexible set of criteria for analyzing the circumstances surrounding each "fair-use" case, and that each case would be judicially analyzed on an ad hoc basis.[26] Therefore, courts seem to have considerable latitude in applying and evaluating fair-use factors.

Courts have given different weight and interpretation to the fair-use factors in different judicial determinations. The following illustrations demonstrate how some courts have interpreted certain fair-use factors. In evaluating the first factor, the purpose and character of the use, courts have not always held that use "of a commercial nature" negates a fair-use finding,[27] nor does a "nonprofit educational" purpose mandate a finding of fair use.[28] A defense of fair use on the basis of the first criterion will more often be recognized, however, when a defendant uses the work for educational, scientific, or historical purposes.[29] Consideration of the second factor, the nature of the copyrighted work, must be based on the facts and circumstances of each particular case. For instance, courts have interpreted the scope of the fair-use doctrine narrowly for unpublished works held confidential by their authors.[30] In examining the third factor, the amount and substantiality of the portion of the work used, courts have looked at both the quantitative aspect –how

[24] Electronic Industries Association (EIA), letter to D. Weimer, c/o OTA, Apr. 28, 1989. The EIA asserts that there is a "statutory exemption" for home taping under the Copyright Act and that the legality of home taping does not depend on the fair-use doctrine.

[25] H.R. Rep. No. 1476, 94th Cong., 2d sess. 65 (1976).

[26] See: EIA, op. cit., footnote 24. The EIA believes that the existing doctrine of fair use is sufficient to adapt to existing and emerging recording technologies and is adequate to address the home taping issue.

[27] *Harper & Row Publishers, Inc. v. Nation Enterprises*, 471 U.S. 539, 593 (1985) (Brennan, J., dissenting); *Consumers Union of U. S., Inc. v. General Signal Corp.*, 724 F.2d 1044 (2d Cir. 1983).

[28] *Marcus* v. Cowe, 695 F.2d 1171 (9th Cir. 1983).

[29] See *Italian Book Corp. v. American Broadcasting Cos.*, 458 F. Supp. 65 (S.D.N.Y. 1978).

[30] A recent case articulating the fair use doctrine involved the personal correspondence of author J.D. Salinger. The court determined that the author had a copyright interest in his correspondence. *Salinger* v. *Random House, Inc.*, 811 F.2d 90 (2d Cir. 1987), *cert. denied*, 108 S. Ct. 213 (1987).

much of the work is used[31] – and the qualitative factor – whether the "heart" or essence of the work is used.[32] The fair-use doctrine is usually not considered to be applicable when the copying is nearly a complete copy of the copyrighted work, or almost verbatim.[33] As will be seen below, however, the concept of "home use" is an exception to this general rule of fair use. In assessing the fourth factor, courts have examined the defendant's alleged conduct to see whether it poses a substantially adverse effect on the potential market for or value of the plaintiff's present work.[34] These fair-use considerations illustrate the great care courts take in applying the fair-use doctrine on a case-by-case basis.

Anyone who violates the exclusive rights of the copyright owner may be considered to be an infringer of copyright.[35] The copyright statutes provide that the copyright owner may institute an action for infringement against the alleged infringer (17 U. S. C., sec. 501(b)(1982)). A court may issue an injunction against the copyright infringer to prevent further infringement of the copyright (17 U. S. C., sec. 502 (1982)). An infringer of a copyright may be subject to the payment of actual damages and profits to the copyright owner (17 U. S. C., sec. 504 (b)(1982)); or in certain circumstances the copyright owner may elect to receive specified statutory damages in lieu of actual damages and profits (17 U. S. C., sec. 504(C)(1982)). In addition, the court may permit the recovery of legal fees and related expenses involved in bringing the action (17 U. S. C., sec. 505 (1982)). Criminal sanctions may also be imposed for copyright infringements in certain cases (17 U. S. C., sec. 506 (1982)).

ANALYSIS OF HOME RECORDING

The Sony Case

American courts have been called on to examine home recordings within the context of videocassette recorders (VCRs). The home use of VCRs under certain circumstances was carefully analyzed, and after a series of conflicting lower court judgments, was approved by the U.S. Supreme Court.[36] In the Supreme Court action, Universal City Studios (the plaintiffs/respondents) did not seek relief against the actual users of the VCRs; instead, Universal sued the VCR manufacturers and suppliers, primarily, Sony, on the basis of contributory infringement.[37] This theory was based on the argument that the distribution and sale of VCRs encouraged and contributed to the infringement of the plaintiffs' copyrighted works.[38] Universal sought monetary damages and also an injunction that would prohibit Sony from manufacturing VCRs in

[31] *Consumers* Union *of U.S., Inc.* v. *General Signal Corp.*, 724 F.2d 1044 (2d Cir. 1983).

[32] *Maxtone- Graham* v. *Burtchaell*, 803 F.2d 1263 (2d Cir. 1986).

[33] *Walt Disney Productions* v. *Air Pirates*, 581 F.2d 751 (9th Cir. 1978), cert. denied 439 U.S. 1132 (1978).

[34] This factor was of considerable importance in the *Sony* cases discussed below. See, also, *Consumers Union of U. S., Inc. v. General Signal Corp.*, 724 F.2d 1044 (2d Cir. 1983).

[35] 17 U.S.C. 501(a)(1982). For a complete discussion of the remedies for copyright infringement, see: Henn, op. cit., fOOtnOte 1, pp. 245-267.

[36] *Universal City Studios, Inc.* v. *Sony Corp. of America*, 480 F.Supp. 429 (D.C. Cal. 1979), rev'd, 659 F,2d 963 (9th Cir. 1981), rev'd, 464 Us. 417 (1984).

[37] *Sony Corp.* v. *Universal City Studios, Inc.* 464 U.S. 417 (1984). In the district court action, Universal had also sought relief against an actual VCR user.

[38] Ibid., pp. J20-A21, 434. "It is, however, the taping of respondents' own copyrighted programs that provides them with the standing to charge Sony with contributory infringement. To prevail, they have the burden of proving that users of the Betamax have infringed their copyrights and that Sony should be held responsible for that infringement."

the future. This action was of great significance, as the Supreme Court had not previously interpreted the issue of fair use within the context of home taping/recording. The Court determined that the key issue to be resolved was whether the sale of Sony's equipment to the public violated any of the rights given to Universal by the Copyright Act.[39]

First, the Court considered the exact nature of the relationship between Sony and its purchasers. The Court determined that if vicarious liability was to be imposed on Sony, such liability had to be basal on the constructive knowledge that Sony's customers might use the equipment to make unauthorized copies of copyrighted material. The Court observed that there exists no precedent in copyright law for the attribution of liability on the basis of such a theory.@ Therefore, it was argued that the sale of such copying equipment is not deemed to be contributory infringement if the product is capable of other uses that are noninfringing. To respond to this issue, the Court deliberated whether the VCR was able to be used for commercially significant noninfringing uses. The Court concluded that the VCR was capable of such noninfringing uses through private noncommercial time-shifting activities in the home. In reaching this determination, the Court relied heavily on the findings of the district court and rejected the conclusions of the court of appeals. The Court's conclusions were based on the idea that Universal cannot prevent other copyright holders from authorizing the taping of their programs and on the finding of fact by the district court that the unauthorized home time-shifting of the respondents' programs was a legitimate fair use.[41] When bringing an action for contributory infringement against the seller of copying equipment, the copyright holder cannot succeed unless the relief affects only the holder's programs, or unless the copyright holder speaks for virtually all copyright holders with an interest in the outcome.[42] The Court determined that the copyright holders would not prevail, since the requested relief would affect other copyright holders who did not object to home time-shifting recording.[43]

After examining the unauthorized time-shifting use of VCRs, the Court determined that such use was not necessarily infringing.[44] On the basis of the district court's conclusions, the Court determined that the potential harm from time-shifting was speculative and uncertain. The Supreme Court arrived at two conclusions. Sony demonstrated that various copyright holders who license their works for broadcast on commercial television would not object to having their programs time-shifted by private viewers. Also, Universal did not prove that time-shifting would cause the likelihood of nonminimal harm to the potential market for or the value of their copyrighted works.[45] Therefore, home use of VCRs could involve substantial noninfringing activities, and the sale of VCR equipment to the public did not represent a contributory infringement of Universal's copyrights. The scope of the Court's holding was expressly limited to video recording in the home, to over-the-air noncommercial broadcasting, and to recording

[39]Ibid., p. 423.

[40]Ibid., p. 439.

[41]Ibid., p. 442.

[42]Ibid., p. 466.

[43]Ibid.

"Ibid., p. 446.

[45]Ibid., p. 456.

for timeshifting purposes. The holding did not address the taping of cable or pay television or the issue of "library building" of recorded programs. In reaching its determinations, the Court rejected the central finding of the court of appeals that required that a fair use had to be "productive."[46] Rather, the Court determined that under certain circumstances, the taping of a video work in its entirety for time-shifting purposes would be allowable under the fair-use doctrine.[47] It should be considered that these findings are "case-law" or "judicially made law" and not statutory law.

Relying substantially on the findings of the court of appeals, the dissenting opinion asserted that there was potential harm to Universal through the use of home video recording.[48] Hence, the dissent concluded that there was no exception for home video recording under the fair use doctrine of current copyright law scheme.[49]

Despite their differing views, both the majority and the dissent inferred that Congress may wish to examine the home video recording issue.[50] As the majority opinion stated:

> It may well be that Congress will take a fresh look at this new technology, just as it so often has examined other innovations in the past. But it is not our job to apply laws that have not yet been written.[51]

Home Use of Recording Equipment

Although the Supreme Court and other courts have provided some guidance for interpreting copy-right law in home recording/taping situations, many questions and issues remain unresolved. It should be considered that the previously discussed *Sony* case was a narrow holding, strictly limited to a very specific situation — home video recording of noncommercial or "nonpay" television for time-shifting. The practical application of current copyright law and related judicial interpretations are here considered within the context of certain typical home recording and viewing situations.

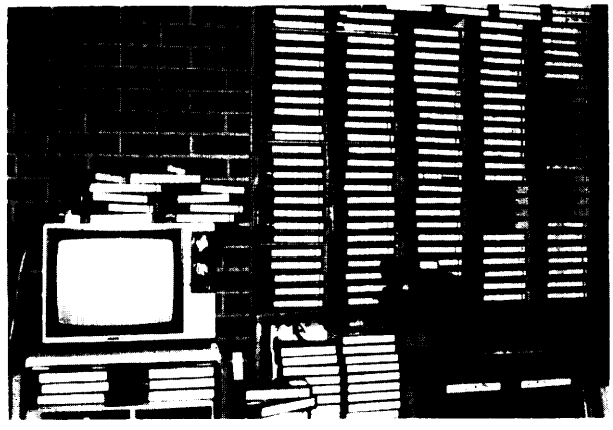

Photo Credit: Office of Technology Assessment

Some consumers have used VCRs to create large home video libraries.

[46]Ibid., pp. 454-455.

[47]Ibid., pp. 449-450.

[48]Ibid., pp. 482-486.

[49]Ibid., p. 475. The decision is the case was a 5-4 vote (majority: Stevens, Burger, Brennan, White, and O'Connor; dissent: Blackmun, Marshall, Powell, and Rehnquist).

[50]Ibid., p. 456 (majority), p. 500 (dissenting). The RIAA takes the position that the Court "expressly suggested" that Congress examine the home video recording issue. (H. Rosen, op. cit., footnote 10.)

[51]I bid., p. 456.

A primary consideration in copyright law as it applies to the judicially created concept of "home use" of recording equipment is determining what constitutes a "home." Although current copyright law and regulations do not specifically define what constitutes a "home," certain inferences can be drawn from the statutory definition provided for the public performance of a work:

> To perform or display a work "publicly" means —
>
> (1) to perform or display it at a place open to the public or at any place where a substantial number of persons outside a normal circle of a family or its social acquaintances is gathered.[52]

An inference can be drawn from the language that the opposite of a "public" display of a work might be a "home," or a private display of the work. In considering this proposition, it could be inferred that a home would signify a place not open to the public and/or a place where only a family and/or its social acquaintances are gathered.

A review of the legislative history pursuant to the passage of copyright legislation gives some insight into the congressional intent concerning the concept of a home. The accompanying legislative history of the Sound Recording Amendment of 1971 appears to indicate that Congress meant the term "home" to include only the traditional, generally conceived concept of an individual's own home. A statement in the 1971 House Report on audio recording provides some insight into the meaning of home recording "where home recording is for private use and with no purpose of reproducing or otherwise capitalizing commercially on it."[53] The legislative history of the 1976 copyright revision discussed the concept of "public performance" and provides some guidance for the concept of home use.

> One of the principal purposes of the definition ["public performance"] was to make clear that,... performances in "semipublic" places such as clubs, lodges, factories, summer camps, and schools are "public performances" subject to copyright control. The term "a family" in this context would include an individual living alone, so that a gathering confined to the individual's social acquaintances would normally be regarded as private. Routine meetings of businesses and governmental personnel would be excluded because they do not represent the gathering of a "substantial number of persons."-

It therefore appears from the legislative history of both the 1971 and 1976 copyright laws that the concept of a "home" is limited to the traditional meaning of the term and that certain other "semi-public" situations are to be considered as "public" places for the purposes of copyright law.[55]

The district court in the *Sony* case examined the concept of home use and its limits:

> "Home-use" recording as used in this opinion is the operation of the Betamax in a private home to record a program for subsequent home viewing. The programs involved in this lawsuit are broadcast free to the public over public airwaves... the court's declaration of non-infringement is limited to this home-use situation.
>
> It is important to note the limits of this holding. Neither pay or cable television stations are plaintiffs in this suit and no defendant recorded the signals from either. The court is not ruling on tape duplication within

[52] 17 U.S.C. 101 (1982).

[53] U.S. Congress, House Committee on th, Judiciary, *Sound Recordings, Report Accompanying S.646*, Serial No. 92-487, September 1971.

[54] U.S. Congress, House Committee on th, Judiciary, *Report* t. *Accompany S.22*, Serial No. 94.-1476, September 1976. (This was the congressional report accompanying the last major copyright revision.)

[55] Melville Nimmer, "Copyright Liability for Audio Home Recording: Dispelling the 'Betamax' Myth, " *Virginia Law Review*, vol. 68, 1982, pp. 1505, 1518-1520.

> the home or outside, by individuals, groups, or corporations. Nor is the court ruling on the off-the-air recording for use outside the home, e.g., by teachers for classrooms, corporations for employees, etc. No defendant engaged in any of these activities and the facts necessary to determine their legality are not before this court.[56]

The court of appeals and the Supreme Court did not contradict the district court's concept of a home or the factual circumstances involved with the home taping in the *Sony* case. It seems certain that the Sony decisions envisioned a home as a private home. Not all recordings made in a home would necessarily fit with the home-use exemption, however.[57]

Since the *Sony* decision, courts have examined various concepts of home recording. A series of cases has examined public performance and home use within the context of VCR viewing. This line of cases has held that the viewing of copyrighted videocassettes in private rooms at video stores constitutes public performance,[58] even when members of a single family viewed a cassette in a private room at the store.[59] These cases illustrate that American courts are very careful in categorizing various situations as a "home" for the purposes of copyright law. Ruling that these viewings were public performances, the courts held that they were subject to the provisions of copyright law.[60]

Two recent cases brought new judicial scrutiny to the home use concept. In one case, a condominium association held weekly dances in its clubhouse, which was owned by all of the condominium owners. The association charged a small admission to cover the cost of the musicians. Representatives of the owners of the copyrighted music that was played at the dances brought an infringement action against the association and won.[61] The importance of this case is that the district court recognized and discussed a "family exception')[62] from copyright liability that the court derived from the "public performance" definition of section 101 of the 1976 Copyright Act. The court determined that the condominium's situation did not fall within this so-called "family exception," and gave judicial recognition to a "family exception" under section 101. In a 1986 decision, a district court held that a private club did not fit within the concept of a home and hence copyrighted materials performed or viewed there were subject to the copyright laws.[63] While these cases did not involve home audio or video recording or viewing, they do illustrate the limited concept of a "home" as interpreted by the courts and the recently articulated "family exception" doctrine of copyright law. The courts have been sparing in the application of "home use" to situations other than the traditional home setting.

Applying copyright law and the relevant judicial guidance can lead to various conclusions about home recording in particular circumstances. The *Sony* case affirmed the use of VCRs to record and replay commercially televised programs for personal use. The concept

---

[56] 480 F.Supp. 429, 442 (D.C. Cal. 1979), *rev'd*, 659 F.2d 963 (9th Cir. 1981).

57A VCR could be used in a home to make copies of a copyrighted tape, hence infringing on the copyright owner's rights.

[58] *Columbia Pictures Indus. v. Redd Home Inc., 568* F. Supp. 494 (W.D. Pa. 1983), *aff'd.*, 794 F.2d 154 (3rd Cir. 1984).

[59] *Columbia Pictures Industries, Inc.* v. *Aveco, Inc.*, 612 F. Supp. 315, 319 (N. D. Pa. 1985), *aff'd.*, 800 F.2d 59 (3rd Cir. 1986).

[60] Although these cases were factually different from the *Sony* cases, they illustrate the reluctance of courts to use the concept Of "home use" in situations that do not fall within the traditional concept of the home.

[61] *Hinton* v. *Mainlands of Tamarac*, 611 F. Supp. 494 (S.D. Fla. 1985).

[62] Ibid., pp. 495-496.

[63] *Ackee Music, Inc. v. Williams, 650* F.Supp 653 (D.Kan. 1986).

of VCR recording for time-shifting purposes appears to be judicially acceptable. The *Sony* case did not, however, address audiotaping, or home taping of cable or "pay" television.

THE INTELLECTUAL PROPERTY SYSTEM AND HOME COPYING

Concept of Intellectual Property

Intellectual property is a unique conception of an inherent and intangible property right in an artistic, scientific, or intellectual work. Sometimes characterized as a "bundle of rights, " intellectual property rights inhere in a particular creation.[64] The intellectual property concept is a unique representation or embodiment of expression which is invested in an artistic, scientific, or intellectual work. This contrasts with the concept of personal property, which governs the ownership of the actual works themselves. Applying these property concepts to particular examples is instructive to distinguish between them. An example of personal property would be a specific phonorecord with a particular musical composition recorded on it. Thus, the phonorecord is personal property–the medium in which the intellectual property is imbedded-while the musical composition/ arrangement/instrumentality that is embodied in all phonorecords with this particular musical composition recorded on it represents the intellectual property. Therefore, the individual phonorecord represents the personal property right, but the artistry, the arrangement, and the musical composition that inhere in this recording represent the intellectual property right. Thus, the concept of an intellectual property right involves the right to create works in particular characterizations.[65]

Statutory Concept of Intellectual Property

The 1976 Copyright Act embraces the concept of the existence of intellectual rights that are separate from the physical ownership rights in the copyrighted works:

> Sec. 202. Ownership of copyright as distinct from ownership of material object
>
> Ownership of a copyright, or of any of the exclusive rights under a copyright, is distinct from ownership of any material object in which the work is embodied. Transfer of ownership of any material object, including the *copy or phonorecord in which the work is first freed,* **does** not of itself convey any rights in the copyrighted work embodied in the object; nor, in the absence of any agreement, does transfer of ownership of a copyright or of any exclusive rights under a copyright convey property rights in any material object. (emphasis added)[66]

The House Report accompanying its enactment analyzes this concept:

> The principle restated in section 202 is a fundamental and important one: that copyright ownership and ownership of a material in which the copyrighted work is embodied are entirely separate things. Thus transfer of a material object does not of itself carry any rights under the copyright, and this includes transfer of the copy or phonorecord– the

[64] U.S. Congress, Serial No. 94-1476, op. cit., fOOtnOte 54, p. 124.

[65] For the purposes of this report, the discussion of intellectual property rights will be limited to only those rights that specifically involve American copyright law. Intellectual property rights may also involve patents, for example.

[66] 17 U.S.C. 202 (1982).

> original manuscript, the photographic negative, the unique painting or statue, the master tape recording, etc.—in which the work was first fixed. Conversely, transfer of a copyright does not necessarily require the conveyance of any material object.[67]

American courts have examined and upheld this concept of intellectual property recognition.[68]

The development of a process enabling the electronic transfer of various creative works has raised the question as to whether an actual physical embodiment of the work must exist to apply the concept of intellectual property. A careful reading of the entire copyright statute and an examination of the legislative history indicate that there need not be an actual physical copy or embodiment of the copyrighted work for the concept of intellectual property to inhere in the work. The copyright statute uses the concepts of both "phonorecord"[69] and of a work being "fixed."[70] In addition to these concepts, it appears from the statutory directives that works that may be electronically or otherwise transmitted would be covered by the statutory provisions governing intellectual property. The legislative history of the 1976 Copyright Law Revision reinforces this belief. As the House Report language stated:

> Under the bill, it makes no difference what the form, manner or medium of fixation may be–whether it is in words, numbers, notes, sounds, pictures, or any other graphic or symbolic indicia, whether embodied in a physical object in written, printed, photographic, sculptural, punched, magnetic, or any other stable form, and whether it is *capable of perception directly or by means of any machine or device now known or later deueloped.* [emphasis added][71]

Therefore, the concept of intellectual property covers electronic transfer or transmission of a work, so long as the work is "fixed," even if the work is not in a "physical" form.

Recent Technological Developments

Recently, great interest has been given to the intellectual property rights in audio and visual works. One reason for this increased interest has been the technological revolution that has occurred since the last major revision of American copyright law in 1976. Since this revision went into effect in 1978, there have been major technological advances that allow easy and effective copying of many copyrighted works. While the 1984 *Sony* case ex-

---

[67] U.S. Congress, Serial No. 1476, op. cit., footnote 54, p. 124.

[68] See, for instance, *Nika* COW. v. *City of Kansas City, Mo.*, 582 F. Supp. 343 (D.C. Mo. 1983). In this action, the court examined whether a company, in transferring certain documents to a municipal corporation, had also transferred its actual intellectual property copyright in these items. The court determined that in following the copyright statute, the copyright of the objects was indeed distinct from the actual ownership or possession of the object.

[69] The copyright statute defines phonorecord as follows:

"Phonorecords" are material objects in which sounds, other than those accompanying motion picture or other audiovisual work, are fried by any method now known or later developed, and from which the sounds can be perceived, reproduced, or otherwise communicated, either directly or with the aid ofa machine or device. The term "phonorecords" includes the material object in which the sounds are first freed. (17 U. S. C., sec. 101 (1982)).

[70] The copyright statute defines a work as being fixed under the following circumstances:

A work is "fixed" in a tangible medium of expression when its embodiment in a copy or phonorecord, by or under the authority of the author, is sufficiently permanent or stable to permit it to be perceived, reproduced, or otherwise communicated for a period of more than transitory duration. A work consisting of sounds, images, or both, that are being transmitted, is "fixed" for purposes of this title if a fixation of the work is being made simultaneously with its transmission. (17 U. S. C., sec. 101 (1982)).

[71] U.S. Congress, Serial No. 94-1476, op. cit., footnote 54, p. 52.

amined a limited aspect of home video recording use for time-shifting purposes, major technological and market changes have occurred since this last judicial determination.

Among these are the advent of compact disc players and digital audiotape (DAT).[72] Other changes include growth in the home video cassette industry[73] and product improvement and declining prices for audio and video recording equipment. While these developments may be truly considered advances for mankind and intellectual development, they raise a myriad of copyright questions that were not directly addressed in either the 1976 revision of the copyright law or in the 1984 *Sony* case.[74]

Although clearly there is a statutory recognition of fair use of copyrighted works, and the courts have created a limited concept of "home use" for certain home videocassette recorder use, the impact of effective and relatively inexpensive sophisticated visual and audio recording equipment has not been legislatively or judicially analyzed in depth. As has been illustrated in the nearly 200 years of American copyright law, however, Congress has attempted to respond legislatively to technological advances that have altered the balance of the traditionally competing factors in copyright: the property rights of the copyright holder and the stimulation of the public's knowledge. This congressional responsiveness was discussed at length in the legislative history surrounding the enactment of the 1976 copyright revision:

> The history of copyright law has been one of gradual expansion in the types of works accorded protection, and the subject matter affected by this expansion has fallen into two general categories. In the first, scientific discoveries and technological developments have made possible new forms of creative expression that never existed before. In some of these cases the new expression forms-electronic music, filmstrips, and computer programs, for example-could be regarded as an extension of copyrightable subject matter Congress had already intended to protect, and were thus considered copyrightable from the outset without the need of new legislation. In other cases, such as photographs, sound recordings, and motion pictures, statutory enactment was deemed necessary to give them full recognition as copyrightable works.[75]

The House Committee on the Judiciary emphasized that the 1976 revision was not inflexible and would itself probably be revised, and that the Committee did not intend to "freeze the scope of copyrightable technology."[76] The Committee also alluded to "other areas of existing subject matter that this bill does not propose to protect but that future Congresses may want to."[77]

This tradition and practice of Congress' responding to technological changes has been recognized by the Supreme Court in its decision in the *Sony* case:

---

[72]See: Ronald K. Jurgen, "consumer Electronics, " in "Technology 'SS," ***IEEE Spectrum,*** January 19S8, p. 56.

[73]Ibid., pp. 112-114.

[74]Some of these legal and policy questions include: What are the precise legal boundaries of the judicial theory of " home use"? When does recording done in the "home" not constitute "home use"? What, if any, enforcement mechanism scould be used to protect copyright holders' rights? Another rather fundamental question is whether the development of digital recording– which produces very high qualit, copies — represents a "quantum leap" in recording technology and therefore indicates the desirability of a major revision in the American system of copyright law. Does the digital representation ofa musical or image/pictorial composition represent a fundamental technological change to which the American copyright system must respond in a substantive manner?

[75]U.S. Congress, Serial No. 94-1476, op. cit., footnote 54, p. 51.

[76]Ibid.

[77]Ibid., p. 52.

> From its beginning, the law of copyright has developed in response **to significant changes** in technology . . . Indeed, it was the invention of a new form of copying equipment – the printing press — that gave rise to the original need for copyright protection. . . . Repeatedly, as new developments have occurred in this country, it has been the Congress that has fashioned the new rules that new technology made necessary.[78]

Therefore, it may well be, as the Supreme Court implied in the Sony decision,[79] that Congress may wish to examine and act in response to the numerous technological advances that have occurred in the information recording and dissemination areas. If Congress does choose to act in this area, it may wish to examine the approaches taken in other countries.

COMPARISON OF THE AMERICAN INTELLECTUAL PROPERTY SYSTEM WITH OTHER INTERNATIONAL COPYRIGHT SYSTEMS

This section describes and analyzes certain aspects of the intellectual property protection/copyright systems in the United States, Great Britain, Canada, and France that relate to home copying. Although the United States, Great Britain, and Canada share historical roots in the development of national copyright laws, significant differences in their intellectual property systems exist. France, with a tradition of national support and protection of the arts, takes yet another approach to the protection of intellectual property.[80]

The United States

As has been previously discussed, the American copyright law has its origins in English common and statutory law. Despite these colonial British roots, American copyright law has developed to suit the specific needs and outlooks of the United States. A fundamental tension in the development of American copyright law relates to the competing concerns for the ownership/property rights of the author/creator/owner and the goal of free dissemination of information for the public good. Traditionally, the United States has espoused a free enterprise system that did not pursue a national policy to promote the arts, and American copyright law reflected these doctrines. For instance, there has never been statutory recognition of artists' or moral rights, and the statutory embodiment of intellectual property rights is a relatively recent occurrence. It does, however, appear that there is a growing trend in American law and philosophy to recognize creative rights.

While the basic legal framework of American copyright law has been previously discussed in this chapter, considering specific aspects of American copyright law will provide insight into the concepts of home copying. In particular, it would be instructive to examine the "first-sale" doctrine and recent amendments that have been enacted concerning record rentals. The principle of the "first-sale" doctrine, in practice, upholds the copy-right of the copyright owner during the first sale or

[78] 464 U.S. 417, 430-431 (1984).

[79] Ibid., p. 456.

[80] One consequence Of this distinction is that the French Government imposes a levy on both audio- and videotapes since December 1986. In addition, other countries have introduced levy schemes. For additional discussion of international systems dealing with performance rights in sound recordings, see ch. 5.

commercial transaction of the work, but extinguishes the copyright owner's rights in subsequent sales or transactions.[81] The House Report accompanying the original (1976) legislation provided an example of the application of the "first-sale" doctrine.

> Thus, for example, the outright sale of an authorized copy of a book frees it from any copyright control over its resale price or other conditions of its future disposition. A library that has acquired ownership of a copy is entitled to lend it under any conditions it chooses to impose.[82]

The "first-sale" doctrine has been upheld in recent court decisions. Thus, when a copyrighted work is subject to a valid first sale, the distribution rights of the copyright holder are extinguished, and the title passes to the buyer.[83]

Congress enacted a significant statutory modification to the "first-sale" doctrine was enacted in the "record rental amendments" to American copyright law in 1984.[84] This legislation was designed to help deal with the situation where record rental stores purchased record albums – the first sale – and then leased the albums for a fee that represented a small portion of the purchase price. The lessee frequently taped the rented record. It was argued that the use of the rental record may have displaced a potential sale of the actual record.[85] Congress thus amended the "first-sale" doctrine:

> (b)(l) Notwithstanding the provisions of subsection (a), *unless authorized by the owners of* ***copyright in the sound recording and in the musical works embodied therein,*** the owner of a particular phonorecord may not, for purposes of direct or indirect commercial advantage, dispose of, or authorize the disposal of, the possession of that phonorecord by rental, lease, or lending, or by any other act or practice in the nature of rental, lease, or lending. Nothing in the preceding sentence shall apply to the rental, lease, or lending of a phonorecord for nonprofit purposes by a nonprofit library or nonprofit educational institution. (emphasis added)[86]

The practical effect of this amendment is to prohibit the rental of such sound recordings without the copyright owners' permission. In actual practice the copyright owners – usually the recording companies–have not authorized record rental, and as a result record rental is not an industry in the United States.

Another aspect of home audio recording occurs when an individual tapes music broadcast on the radio, or records from tapes or records for personal use in the home or for "time-shifting" purposes. Congressional intent underlying the Sound Recording Amendment of 1971 was very clearly to continue to permit certain home taping:

> Specifically, it is not the intention of the Committee to restrain the home recording, from broadcasts or from tapes or records, of recorded performances, where the home recording is for private use and with no purpose of reproducing or otherwise capitalizing commercially on it. This practice is common and unrestrained today, and the record producers

---

[81] 17 U.S.C. 109 (1982 & Supp. V, 1987).

[82] See U.S. Congress, Serial No. 94-1476, op. cit., footnote 54, p. 79.

[83] See, *T.B. Harms Co. v. JEM Records, Inc., 655* F. Supp. 1575 (D. C.N.J. 1987); *Walt Disney Productions v. Basmajian*, 600 F. Supp. 439 (D. C.N.Y. 1984). See also: Nimmer, op. cit., footnote 2, vol. 1, sec. 8.12 **[B].**

[84] Public Law 94-450, SEC. 2, Oct. 4, 1984, 98 Stat. 1727.

[85] See 129 *Congressional Record*, S 9374 (1983) (Statement of senator Thurmond).

[86] 17 U, S, C., sec. 109(b)(1) (1982 & Supp. V, 1987).

> **and performers would be in no different position from that of the owners of copyright in recorded musical compositions over the past 20 years.[87]**

While it appears that Congress intended to allow certain home audiotaping practices in 1971, the congressional reports accompanying the 1976 copyright revision were silent on this issue. However, no report or statutory language negated the principles stated in 1971.[88] Currently, it appears that the 1971 legislative history may provide evidence of congressional intent to permit home taping of music from broadcasts or prerecorded sources. This issue is not positively determined by statute or case-law, however.

The Electronic Industries Association (EIA) advances the position that language of the 1971 amendments clearly denied to copyright owners the right to prevent home taping.[89] Furthermore, the EIA believes that nothing in the 1976 amendments to the copyright law negated the principle that home taping from broadcasts or prerecorded materials was not an infringement.[90] EIA takes the position that in view of the "clear Congressional intent to exempt home taping from among the exclusive rights granted to copyright holders, we submit that it is inappropriate to consider the right of home taping strictly as a judicial derivative of the fair-use doctrine."[91] The EIA summarized their opinion:

> The fair use doctrine comes into play only where the activity arguably falls within the exclusive rights accorded to the copyright holder. Because home audio taping is statutorily exempt from those exclusive rights, the fair use issue, while theoretically pertinent, should not ordinarily be implicated in the context of home audio taping.[92]

In a sharply contrasting opinion, the Recording Industry Association of America, Inc., (RIAA) disregards the legislative history of the 1971 amendments. RIAA asserts that the legislative history was "made irrelevant *by* the subsequent overhaul of the copyright law in 1976."[93] RIAA takes the approach that the 1971 legislation was intended to preserve the status quo, pending a full revision of the law, and that the enactment of the new copyright law made the former legislative history irrelevant.

The home taping of records or other recordings that are borrowed from a public library raises additional copyright considerations. While the American copyright statute is very explicit on the reproduction abilities of libraries and archives,[94] there does not appear to be specific statutory language dealing with the home copying of audio works borrowed from public libraries.

Another aspect of American copyright law that deals with the copying of copyrighted materials allows the copying of computer programs for certain purposes and under specific

---

[87] U.S. Congress, Serial No. 92-487, op. cit., footnote 53, p. 7. The district court in the ***Sony*** decision relied on this rationale in upholding the taping of broadcast material for home use. See, 4S0 F. Supp. 429, 444 (D.C. Cal. 1979).

[88] This issue was addressed by the district, court in the ***Sony*** case. See, 480 F. Supp. 429, 444-445 (1979). However, the Supreme Court in the Sony decision did not analyze this issue.

[89] EIA, op. cit., footnote 24, p. 3. The EIA asserts that section 1(f) of the 1971 Act provided copyright holders the exclusive right to reproduce and distribute sound recordings "to the public." "By limiting the right of copyright holders to reproduce and distribute only as to the public, Congress thereby also denied copyright holders the right to preclude home taping for private use." Ibid.

[90] Ibid. "It would be folly to presume that Congress would have made such sweeping change to the existing state of the law, turning millions of private citizens into lawbreakers, without explicit statutory language or legislative history."

"I bid., pp. 3-4.

[92] Ibid., p. 4.

[93] H. Rosen, op. cit., footnote 10, p. 2.

9417 U.S.C. 10s (1982).

circumstances.[95] Thus, the owner of a computer program may make another copy or adaptation of that program if the copy is needed for a specific step in using the computer program or if the copy is for archival purposes.

Great Britain

Great Britain enacted a revised, comprehensive copyright act, the Copyright, Designs and Patents Act 1988, on November 8, 1988.[96] Most of the provisions of the Act became effective in the spring of 1989, and the Act repeals and entirely replaces existing copyright legislation.

Several provisions of the new British Act are of interest in the analysis of home taping. The Act provides a sweeping definition of "sound recording" that exceeds the American concept of "sound recording":

> "sound recording" means —
> (a) a recording of sounds, from which the sounds may be reproduced, or
>
> (b) a recording of the whole or any part of a literary, dramatic or musical work, from which sounds reproducing the work or part maybe produced, regardless of the medium on which the recording is made or the method by which the sounds are reproduced or produced; ...[97]

Just as American law permits the copying of certain computer programs, so does the British law, but the British law has a far broader application than the American law. The American law is limited to computer software, while the British counterpart covers a variety of **works** which are in "electronic form":

> Works in electronic form
> 56.– (1) This section applies where a copy of a work in electronic form has been purchased on terms which, expressly or impliedly or by virtue of any rule of law, allow the purchaser to copy the work, or to adapt it or make copies of an adaptation, in connection with his use of it.
>
> (2) If there are no express terms–
> (a) prohibiting the transfer of the copy by the purchaser, imposing obligations which continue after a transfer, prohibiting the assignment of any licence or terminating any license on a transfer, or
>
> (b) providing for the terms on which a transferee may do the things which the purchaser was permitted to do, anything which the purchaser was allowed to do may also be done without infringement of copyright by a transferee; but any copy, adaptation or copy of an adaptation made by the purchaser which is not also transferred shall be treated as an infringing copy for all purposes after the transfer.
>
> (3) The same applies where the original purchased copy is no longer usable and what is transferred is a further copy use in its place.
>
> (4) The above provisions also apply on a subsequent transfer, with the substitution for references in subsection (2) to the purchaser of references to the subsequent transferor.[98]

---

[95] 17 U.S.C. 117 (1982).

[96] See: Intellectual Property Dept., Linklaters & Paines, "Copyright, Designs and Patents Act 1988 1-2" (London: Linklaters & Paines, 1988). This work is an analysis of the new British copyright law prepared by a British law firm for its international offices and clients.

In addition to dealing with copyrights, the Act also includes provisions for the protection of design rights, and patents and trademarks.

[97] [Great Britain] *Copyright, Designs and Patents Act* (1988), ch. *48, 5(* 1).

[98] Ibid., sec. 56.

A particular section of the Act provides for the rental of sound recordings, films, and computer programs to the public.[99] Under these statutory provisions, a rental arrangement with the public is outlined. This section also provides that the copyright in a computer program is not infringed by the rental of copies to the public after the end of a period of 50 years from the end of the calendar year in which the copies of it were initially issued to the public in electronic form.[100]

The subject of time-shifting is dealt with directly in the Act.

> The making for private and domestic use of a recording of a broadcast or cable programme solely for the purpose of enabling it to be viewed or listened to at a more convenient time does not infringe any copyright in the broadcast or cable programme or in any work included in it.[101]

Thus, the British law specifically exempts time-shifting recording from the realm of infringement. In the United States, this practice is embodied only in case-law, not statutory law. The principle is further extended by the provision that the free public showing or playing of a broadcast or cable programme is not to be considered an infringement of copyright. Certain condition and circumstances must, however, be met for the viewing to be considered a free public showing.[102]

The issue of moral rights is directly and comprehensively addressed in the British copyright law.[103] The scope of British statutory moral rights includes the right to be identified as the author or director of the work,[104] the right to object to the derogatory treatment of the work,[105] protection against false attribution of works,[106] and other factors.

Therefore, it appears that the new British copyright law intends to respond comprehensively to recent technological advances and problems that are created through the use of such inventions.[107]

Canada

The Canadian copyright law has recently undergone significant amendments,[108] and several provisions of the new law provide an interesting contrast to American copyright law. Canadian copyright law is of interest to the United States, as both nations share a heritage of the British common law tradition and are North American neighbors, with an overflow of broadcasting, popular culture, and other common interests.

It appears that Canada does not have a "home-use" exception embodied in its copyright statute. The Canadian statute describes sound recordings as follows: "...copyright

---

[99] Ibid., sec. 66.

[100] Ibid., sec. 66.(5).

[101] Ibid., sec. 70.

[102] Ibid., sec. 72.

[103] Ibid., ch. IV.

[104] Ibid., sec. 77.

[105] Ibid., sec. 80.

[106] Ibid., sec. S4.

[107] Although the British Government considered a royalty payment on blank tapes, it was not enacted as part of the copyright revision.

[108] See: Canada Gazette, *Statutes of Canada, 1988* (Ottowa, Canada: Minister of Supply Services, Sept. 1, 1988), chs. 13 to 19.

shall subsist for the term hereinafter mentioned in records, perforated rolls, and other contrivances by means of which sounds may be mechanically reproduced, in like manner as if such contrivances were musical, literary or dramatic works. ''log The length of copyright protection for these works is '(fifty years from the making of the original plate from which the contrivance was directly or indirectly derived.... "[110]

Several aspects of the 1988 Canadian copyright amendments are of interest. A computer program is statutorily defined as "a set of instructions or statements, expressed, freed, embodied or stored in any manner, that is to be used directly or indirectly in a computer in order to bring about a specific result."111 The law also permits the owner of a computer program to make a single reproduction of that program for his own use.[112] The Canadian amendments also recognize the moral rights of the creators of artistic works and provide protection for the injury to such rights.113

France

France has a very comprehensive copyright law that differs markedly from the other laws examined in this section. The statutory scope of intellectual works covers a wide variety of artistic works:

> Article 3. The following shall in particular be considered intellectual works within the meaning of this law: books, pamphlets, and other literary, artistic and scientific writings; lectures, addresses, sermons, pleadings in court, and other works of the same nature; dramatic or dramatico-musical works; choreographic works; circus acts and feats and pantomimes, the acting form of which is fixed in writing or otherwise; musical compositions with or without words; cinematographic works and other works consisting of moving sequences of images, with or without sound, together referred to as audiovisual works; works of drawing, painting, architecture, sculpture, engraving, lithography; graphical and typographical works; photographic works and other works produced by techniques analogous to photography; works of applied art; illustrations; geographical maps; plans, sketches, and plastic works, relative to geography, topography, architecture, or the sciences; software,.... [114]

This inclusive scope of intellectual property in the French law appears to be one of the most all-encompassing in the world.

Similarly, France has a very far-reaching concept concerning the performance rights of the author/copyright owner:

> Article 27. Performance shall consist in the communication of the work to the public by any process whatsoever, particularly:
>
> –public recitation, lyrical performance, dramatic performance, public presentation, public projection and transmission in a public place of a telediffused work;
>
> –by telediffusion
>
> Teledifussion shall mean distribution by an telecommunication process whatsoever of sounds, images, documents, data and messages of any kind.

---

[109] Canadian Copyright Statute, Sec. 4(3), from UNESCO and WIPO, ***Copyright Laws and Treaties of the World*** (Washington, DC: Bureau of National Affairs, 1987).

[110] Ibid., sec. 10.

[111] Canada Gazette, op. cit., footnote 110, sec. 1(3).

[112] Ibid., sec. 5.

[113] Ibid., sees. 1, 12

[114] Law No 57-298 [France] on *Literary and Artistic Property*, Art. 3, from: UNESCO, *Copyright Laws and Treaties of the World* (1987).

> Transmission of the work towards a satellite shall be assimilated to performance.
>
> Transmission of a broadcast work by means of a loudspeaker or, as the case may be, by means of a television screen placed in a public place.115

This statute presents the novel concept of "teledifussion," which would apparently cover the distribution of sounds through any telecommunication process.

Like the American statute, the French copyright law distinguishes between the transfer of personal and intellectual property: "The incorporeal property ...shall be independent of property rights in the material object. The person who acquires this object shall not be invested, by its acquisition, with any of the rights provided by this law... "[116]

One of the most unique features of the French copyright law is the great emphasis placed on the rights of the creator and/or copyright owner: the integrity of the creator's works and the protection of such creative efforts are of major importance.

Summary

While this section is not a comprehensive analysis of international copyright law, several salient features of the various national copyright systems have been examined. In the United States the "first-sale" doctrine and the rental record amendments illustrate how American copyright law has developed and responded to particular circumstances and needs. In Great Britain the new copyright law also responded to changes in society and technology. Although the Canadian copyright law is less comprehensive than the other statutes **examined, it** too has been amended to reflect changing technology. The French copyright law appears to be one of the most inclusive in the world. Its scope of coverage is very broad and it is deferential to the rights of creative artists.

CHANGES TO TRADITIONAL AMERICAN COPYRIGHT CONCEPTS

International Protection of American Intellectual Property

Concurrent with the rapid technological developments in the audio recording and reproduction industry, there has been a growing concern regarding the international protection of American intellectual property. Two forces have given rise to this concerns: the ability to produce high-quality copies of copyrighted works easily and inexpensively, and the resulting possibility of "piracy" of copyrighted works – the reproduction, manufacture, and sale of copy-righted works without the permission of the copyright owner.

At the present time there exists no uniform international or universal copy-right concept that would ensure the protection of an author's works on a global basis. An author's protection for the unapproved use of his works in a foreign country usually is based on that country's laws. Many foreign nations provide copyright protection for works created by foreigners through terms set by various international copyright agreements. Protection for American authors may exist through bilateral or multinational treaties. The United States is a member of the two principal multinational

[115] Ibid., title II, art. 27.

[116] Ibid., art. 29.

copyright conventions: the Universal Copyright Convention ("UCC")[117] and the Berne Convention for the Protection of Literary and Artistic Works ("Berne Convention").[118]

Before Congress enacted legislation that enabled the United States to adhere to the Berne Convention in 1988, the UCC provided the broadest international protection available to American copyright holders.[119] Many countries belong to both the UCC and the Berne Convention. The UCC standards, however, are not considered to be so stringent as the Berne Convention's, and commentators believe that the UCC is less effective in preventing copyright violations.[120] Under the UCC, works by an author who is a national or a domiciliary of a UCC member country are eligible for UCC protection. Any author, irrespective of nationality or domiciliary, whose work was first published in a country covered by the UCC, may claim protection under the UCC. Thus, under the UCC, works by Americans and works first published in the United States would at least be given the same copyright protection as that accorded to the works of the foreign country's nationals for works first published in that foreign country. This copyright treatment is usually called "national treatment."[121] UCC protection is available to American authors, provided that certain notice formalities and other requirements are met.

In addition to the UCC, the United States has entered into other bilateral copyright treaties or accords with countries that belong to neither the Berne Convention nor the UCC. In recent years the United States signed treaties with certain nations where alleged copyright "piracy" had occurred. Among these bilateral copyright treaty countries are Thailand, Taiwan, Singapore, and South Korea.

The most recent development for the international protection of American intellectual property has been United States adherence to the Berne Convention. On March 1, 1989, the United States, formally became a party to the Berne Convention, which has been in existence since 1886. The decision was made only after extensive congressional consideration of the implications of membership.[122] On March 1, 1989, certain copyright amendments went into force that brought American copyright law into compliance with Berne Convention obligations.[123] From March 1, 1989, onward, copyrights in the works of American authors will receive copyright protection by all of the

---

[117] The Universal Copyright Convention consists of two acts, one signed in Geneva in 1952 and another signed in Paris in 1971. The United States ratified both agreements. See: Nimmer, op. cit., footnote 2, vol. 1, sec. 17.04 [B].

[118] Berne Convention Implementation Act of 1988, Public Law 100-568, Oct. 31, 1988, 102 Stat. 2853.

[119] The UCC is administered by the United Nations Educational, Scientific, and Cultural Organization (UNESCO). This accord was established for the purpose of providing an international copyright protection network suitable for the participation of the United States.

[120] See: Harrison Donnelly, "Artists' Rights and Copyrights," *Congressional Quarterly's Editorial Research Reports,* May 13, 1988, pp. 246, 248.

[121] See, Nimmer, op. cit., footnote 2, vol. 1, sec. 17.04[B].

[122] In the 100th Congress, five bills were introduced and considered concerning the adherence of the United States to the Berne Convention: H.R. 1623, H.R. 2962, H.R. 4262, S. 1301, and S. 1971. The Subcommittee on Courts, Civil Liberties, and the Administration of Justice of the House Judiciary Committee held hearings on H.R. 1623. The House Judiciary Committee prepared a report on H.R. 4262 (H.R. Rep. No. 100-609). H.R. 4262 was the bill that was enacted into law. The Senate Subcommittee on Patents, Copyrights, and Trademarks of the Senate Judiciary Committee held hearings on S. 1301 and on S. 1971 and prepared a report on S. 1301 (S. Rep. No. 100352).

[123] See Public Law 100-568, Oct. 31, 1988, 102 Stat. 2853. Among the changes brought about by the United States' adherence to the Berne Convention were: changes in the formalities of copyright registration, inclusion of architectural plans within the scope of copyright coverage; matters dealing with jukebox licenses, and other areas. A specific provision of the law expressly excludes recognition of the concept of artists' or moral rights. See discussion below.

Berne Convention's member nations. In adhering to the Berne Convention, member nations must agree to treat nationals of other member nations as their own nationals for the purposes of copyright protection. Thus, under certain instances, American authors may receive higher levels of protection than the guaranteed minimum. Also, works of foreign authors who are nationals of a Berne Convention country and whose works are first published in a Berne Convention country will receive automatic copyright protection in the United States.

The primary purpose of these international accords is to provide copyright protection for American nationals in foreign countries. While the exact terms of the accords vary, the basic intent and fundamental treaty provisions are similar. Until fairly recently, the United States was ambivalent about adhering to the Berne Convention. A primary reason for negotiating the UCC was to provide "Berne-like" protection for American nationals, and many of the negotiators of the UCC saw it as a "bridge" to adhering to the Berne Convention.[124] The provisions of the UCC and the Berne Convention are similar; however differences exist. Notably, the Berne Convention has no formal notice requirements for copyright registration and the Berne Convention recognizes the moral rights of artists. Some commentators believe that the primary difference between the two accords was the notice of registration requirement.[125]

Several strong arguments *were* advanced for the United States adhering to the Berne Convention.[126] A primary reason was that Berne Convention membership would restore the United States' international copyright leadership role, which has been limited since the American withdrawal from UNESCO– the administering body of the UCC –in 1984. Another important reason advanced for Berne Convention adherence was that 24 nations who are not members of the UCC were members of the Berne Convention, and greater protection to American copyright holders would be extended through Berne membership. Arguably, American adherence to the Berne Convention would result in the Berne Convention itself gaining strength and becoming a more dynamic international force in the realm of copyright protection.[127]

Artists' Rights

Although the concept of artists' rights is beyond the scope of this OTA study, it is a current issue of concern in the field of American copyright law and will be briefly summarized. The Anglo-American common law copyright tradition did not recognize certain "(moral" or artists' creative rights in their artistic creations. Thus, protection for artists' works was achieved primarily through bargaining and negotiation with publishers, purchasers, and other buyers of works. Hence, under common law, when ownership of the objector the copyright passed from the creator to the buyer, creative or artistic rights usually passed on to the purchaser.[128] In the United States, where there was no strong tradition of public support for the arts, there has not been strong

[124] W. Allen Wallis, "International Protection of U.S. Copyrights, " ***Department of State Bulletin,*** October 1987, p. 26.

[125] William S. Strong, ***The Copyright Book: A Practical Guide*** (Cambridge, MA: MIT Press, 1981), p. 166.

[126] See: Wallis, op. cit., footnote 124, p. 28.

[127] Ibid. See also: U.S. Congress, The ***Berne Contention,*** Hearings before the Subcommittee on Patents, Copyrights and Trademarks of the Senate Committee on the Judiciary, 100th Cong., 2d sess. (1988), pp. 5961.

[128] In contrast see the discussion of the "first-sale" doctrine above.

recognition of the creative rights of the artist.[129] In continental European countries, where the role of the artist and his work was considered more important, different legal concepts developed. Thus, in some European countries a major goal of copyright laws is to protect the connection between the artist and his work. This right of "paternity" recognizes the author's creation of the work. Certain European nations also recognize laws prohibiting the change, 'mutilation," or alteration of artists' works. These artists' rights were first recognized by the Berne Convention in 1928.

Consideration of artists' rights or moral rights has become an issue in the United States. In the 100th Congress, bills were introduced[130] and were seriously analyzed and debated.[131] A closely related issue to the traditional concept of artists' or moral rights is the recent technological development of motion picture "colonization." Through various electronic means, color is added to copies of motion pictures that were originally produced in black and white. Currently, moral rights of artists are not formally recognized in the United States, as they are in some European nations.

In adhering to the Berne Convention, the United States specifically did not agree to the Berne Convention's provisions for moral/artists' rights. As the Berne Convention Implementation Act provided:

> (b) CERTAIN RIGHTS NOT AFFECTED. – The provisions of the Berne Convention, the adherence of the United States thereto, and satisfaction of United States obligations thereunder, do not expand or reduce any right of an author of a work, whether claimed under Federal, State, or the common law–
>
> (1) to claim authorship of the work; or
>
> (2) to object to any distortion, mutilation, or other modification of, or other derogatory action in relation to, the work, that would prejudice the author's honor or reputation.[132]

Thus, although the issue of artists'/moral rights has been of considerable legislative, political, and societal concern in the United States, no major legislation addressing it has been enacted.

---

[129] Nadine Cohodas, "Berne-Convention Bill Approved," Congressional *Quarterly,* Apr. 16, 1988, pp. 1028, 1028-1029.

[130] Two pieces of companion legislation were introduced in the 100th Congress concerning artists' rights: H.R. 3221 and S 1619. The House Subcommittee on Courts, Civil Liberties and the Administration of Justice of the House Judiciary Committee held hearings on H. R. 3221 The Subcommittee on Patents, Copyrights and Trademarks of the Senate Judiciary Committee held hearings on S. 1619. Although neither bill was enacted, negotiations and deliberations were in progress at the close of the 100th Congress, and this legislation had proceeded farther in the legislative process than prior legislation concerning artists' rights. At the time of this writing, legislation has not yet been introduced in the 101st Congress concerning artists' rights.

[131] See, for instance U.S. Congress, *Visual Artists Rights Act of 1987,* Hearings before the Subcommittee on Patents, Copyrights and Trademarks of the Senate Committee on the Judiciary, 100th Cong., 1st sess. (1987).

[132] Public Law 100-568, 102 Stat. 2853, Oct. 31, 1988, sec. 3(b).

Chapter 4

An Overview of the US. Recording Industry

CONTENTS

	Page
THE GROWTH IN THE U.S. RECORDING INDUSTRY	91
RECORDING COMPANIES	91
Record Company Functions	94
Differences Between Majors and Independents	94
Distribution	95
Retail Sales	96
RECORDING CONTRACTS	96
Types of Recording Contracts	96
Contract Provisions	98

Tables

Table	*Page*
4-1. Annual Shipments	92

Chapter 4
An Overview of the U.S. Recording Industry

THE GROWTH IN THE U.S. RECORDING INDUSTRY

The U.S. recording industry is a multibillion-dollar industry that has experienced a cyclical series of gains and losses (table 4-1). For the past several years, however, the recording industry has been experiencing an increase in revenues: the industry's dollar volume in 1987 was $5.57 billion in manufacturers' shipments (based on the suggested list price), an increase of 19.7 percent over 1986 figures,[1] and the 1988 volume was a record $6.25 billion, a 12.2-percent increase over 1987.[2] The number of records, tapes, and CDs shipped, net after returns from retailers, increased 8 percent to reach an all-time high of 761.9 million[3] (table 4-l). The Harry Fox Agency, the music licensing agency, reports that 65,525 licenses were issued in 1988, a 13.6-percent increase over 1987. Of these, 25,380 (38.7 percent) were first-time licensed songs, compared with 15,088 first-time licenses in 1987.[4]

Although revenues for the recording industry are expected to grow at an average annual rate of about 6 percent through 1993,[5] industry spokesmen are adamant that current growth does *not* indicate that the effects of home audiotaping are negligible. On the contrary, they assert that revenue growth would have been even larger, if not for home audiotaping.[6]

A large part of the recent increase in revenues can be attributed to the introduction of several new formats, especially compact discs (CDs). Introduced in 1983, CDs accounted for a third of the industry's total dollar volume in 1988 (table 4-l). Sales of cassette singles reached $57.3 million since their introduction in 1987, and sales of yet another new format, the 3-inch CD single amounted to nearly $9.8 million (table 4-l).

Meanwhile, the proliferation of portable cassette players, Walkman-type stereos, audiocassette decks, etc., has increased the popularity of cassettes, which are now the predominant format or "carrier" for prerecorded music. Cassette sales accounted for 54 percent of all dollars spent on prerecorded music for 1988, while unit sales increased 10 percent in 1988 to a value of $3.38 billion[7] (table 4-l).

The sales value of LPs declined to $532.3 million, continuing a decline that began in 1980. Unit sales of disk singles also declined 11 percent in 1988 (table 4-l).

RECORDING COMPANIES[8]

The U.S. recording industry has six dominant record companies (the "majors"), each with several affiliated labels. They are:

---

[1] RIAA Market, Research Committee, Recording Industry Association of America, Inc., 1989.

[2] H. Rosen, RIAA, letter to J. Winston, OTA, May 2, 1989. Enclosure with comments on draft ch. 3, p. 1.

[3] RIAA Market Research Committee, Recording Industry Association of America, Inc., 1989.

[4] Edward P. Murphy, President, National Music Publishers' Association, Inc. and the I-Larry Fox Agency, Inc., letter to OTA, Feb. 28, 1989,

[5] U.S Department of Commerce, ***U.S. Industrial Outlook, 1989,*** p. 57-4.

[6] U.S. Congress, Senate Judiciary Committee, ***Video and Audio Home Taping,*** hearings before the Subcommittee on Patents, Copyrights, and Trademarks, Serial No. J-98-75, Oct. 25, 19&3; and U.S. Congress, Senate Judiciary Committee, ***Home Audio Recording Act***, hearings before the Subcommittee on Patents, Copyrights and Trademarks, Serial No. J-99-69, Oct. 30, 1985, Mar. 25 and Aug. 4, 1986.

[7] H. Rosen, RIAA, letter to J. Winston, OTA, May 2, 1989. Enclosure with comments on draft ch. 3, p. 2.

[8] The following is a general overview of the U.S. record industry, and is in no way meant to be a comprehensive discussion Of how recording companies function. It is not an attempt to fully explain all aspects of the recording industry, but rather highlights some of the major characteristics and distinctions of its operation.

Table 4-1.—Annual Shipments

Manufacturers' unit shipments (millions net after returns)

	'74	'75	'76	'77	'78	'79	'80	'81	'82	'83	'84	'85	'86	'87	'88	% Chg. '87-'88
Disc singles	204.0	164.0	190.0	190.0	190.0	195.5	164.3	154.7	137.2	124.8	131.5	120.7	93.9	82.0	65.6	-20%
LP's/EP's	276.0	257.0	273.0	344.0	341.3	318.3	322.8	295.2	243.9	209.6	204.6	167.0	125.2	107.0	72.4	-32%
CD's	–	–	–	–	–	–	–	–	–	0.8[a]	5.8	22.6	53.0	102.1	149.7	+47%
Cassettes	15.3	16.2	21.8	36.9	61.3	82.8	110.2	137.0	182.3	236.8	332.0	339.1	344.5	410.0	450.1	+10%
CD singles	–	–	–	–	–	–	–	–	–	–	–	–	–	–	1.6[a]	NA
Cassette singles	–	–	–	–	–	–	–	–	–	–	–	–	–	5.1[a]	22.5	+341.%
Total[b]	592.0	531.8	590.9	698.2	726.2	701.1	683.7	635.4	577.7	578.0	679.8	653.0	618.3	706.8	761.9	+8%

Manufacturers' dollar value ($ millions at suggested list price)

	'74	'75	'76	'77	'78	'79	'80	'81	'82	'83	'84	'85	'86	'87	'88	% Chg. '87-'88
Disc singles	194.0	211.5	245.1	245.1	260.3	275.4	269.3	256.4	283.0	269.3	298.7	281.0	228.1	203.3	180.4	-11%
LP's/EP's	1,356.0	1,485.0	1,663.0	2,195.1	2,473.3	2,136.0	2,290.3	2,341.7	1,925.1	1,689.0	1,548.8	1,280.5	983.0	793.1	532.3	-33%
CD's	–	–	–	–	–	–	–	–	–	17.2[a]	103.3	389.5	930.1	1593.6	2089.9	+31%
Cassettes	87.2	98.8	145.7	249.6	449.8	604.6	776.4	1,062.8	1,384.5	1,810.9	2,383.9	2,411.5	2,499.5	2,959.7	3,385.1	+14%
CD singles	–	–	–	–	–	–	–	–	–	–	–	–	–	–	9.8[a]	NA
Cassette singles	–	–	–	–	–	–	–	–	–	–	–	–	–	14.3[a]	57.3	+301%
Total[b]	2,186.4	2,378.3	2,732.0	3,500.8	4,131.4	3,685.4	3,862.4	3,969.9	3,641.6	3,814.3	4,370.4	4,387.8	4,651.1	5,567.5	6,254.8	+12%

SOURCE: RIAA Market Research Committee, 1989

[a] Format introduced. 1987 sales for cassette singles are for only 6 months.
[b] RIAA totals include 8-track tapes.

1. CBS Records Group, which owns, among others, the Columbia, Epic, and Portrait labels;
2. Warner Communications, Inc., which owns, among others, Warner Brothers, Elektra/Asylum/Nonesuch Records, and Atlantic Records;
3. RCA Records Group, which along with Arista is a subsidiary of Bertelsmann Music Group (BMG) of West Germany,
4. Capitol Industries-EMI, Inc., which owns Capitol Records, EMI America, Angel, Manhattan, and Blue Note labels;
5. MCA, Inc.; and
6. Polygram, which includes the Mercury, Polydor, Phillips, London, and Deutsche Gramophone labels.

For the most part, the majors have historically grown in size by the acquisition of smaller competitors.[9] For example, each of the affiliated labels of Warner Communications, Inc., was at one time an independent company, and MCA, Inc., just recently acquired Motown records.

The major recording companies have experienced tremendous growth over the current upswing. In 1988, both CBS and BMG Records experienced their biggest selling year.[10] Similarly, Warner Communications achieved its highest operating income in the first half of 1988, netting $143 million.[11] MCA, Inc., hit an all-time high mark of **$41 million in 1987, a 21-percent** increase over the previous year.[12]

Currently, there are two large independent recording companies, A&M, which contracts with BMG for its manufacturing and distribution, and Chrysalis, which contracts with CBS. Motown Records, previously another large independent company, was recently sold to MCA which had handled its manufacturing and distribution, and to MCA's investment partner, Boston Ventures, for $61 million.[13] These large independent labels have maintained at least 1 percent of the market share over a period of years, and with the exception of distribution, they perform all of the functions of a major recording company.[14] There are numerous other independent labels. MTS, Inc., the company that runs Tower Records, for example, carries over 2,600 listings of independent labels.[15] These firms vary in size from A&M and Chrysalis to a label owned by just one artist.[16] Most are small firms that in the aggregate maintain a market share of less than 1 percent.[17]

---

[9]David E. Kronemyer and J. Gregory Sidak, "The Structure and Performance of the U.S. Record Industry," *1986 Entertainment, Publishing and the Arts Handbook,* by John David Viera and Robert Thorne (eds.) (New York, NY: Clark Boardman Co. Ltd., 1986), p. 266.

[10]David Lieberman, "Now Playing: Th, Sound of Money: Th, Record Industry's Platinum Success Is Spawning Multimedia Empires," ***Business Week, No. 306586-90,*** Aug. 15, 198S, pp. 86-87.

[11] Mark Mehler, "WCI Music Nets $143 Mil Income in Record 1st Half," *Billboard*, vol. 100, No. 31, July 30, 1988, p. 5.

[12]Lieberman, op. cit., footnote 10, p. 86.

[13]See Mark Potts, "Grapevine's Right: Motown Sold: As Rumored, MCA Inc. To Buy Record Company," ***The Washington Post***, June 29, 1988, pp. G8G9.

[14]United States of America before Federal Trade Commission, Docket No. 9174, In the matter of Warner Communications, Inc., Warner Bros. Records, Inc., Chappell & Co., Inc., and Polygram Records, Inc., Trial Brief of Counsel Supporting the Complaint, Aug. 17, 1987, p. 9.

[15]Russell M. Solomon, President, Tower Records, letter to OTA, May 2, 1989.

[16]Kronemyer and Sidak, op. cit., footnote 9, p. 270; FTC hearings, op. cit., footnote 14, pp. 8-9.

"FTC hearings, op. cit., footnote 14, pp. 8-9.

Record Company Functions

The production and sale of prerecorded music in the United States comprise three major functions: production, manufacturing, and distribution. Production entails selecting and recruiting artists and material for the artist to record, securing the arrangement, financially managing the recording, and recording the material. Manufacturing involves reproducing and packaging the recordings onto cassettes, LPs, singles, CDs, etc. Distribution includes marketing, advertising, promotion, and the orderly release of the product, as well as managing sales, inventory, collection, and wholesale pricing.[18] While exact data were not available to OTA, interviews with recording company executives suggest that manufacturing, packaging, and royalty costs are about $2.50 to $2.75 for a typical LP/cassette, and $3.50 to $4.00 for CDs. Of the wholesale price (approximately $5.00 for an LP or cassette), perhaps $1.00 will go to the artist and another $0.55 will go to the music publisher and songwriter.[19]

Differences Between Majors and Independents

Whereas all of the major labels are typically minor subsidiaries of diversified corporations,[20] independent labels are generally involved only in the business of producing records.[21] The major record companies also differ from the independents in that they are vertically integrated into the production and distribution of prerecorded music on a national or international scale.[22] Thus, they can produce, manufacture, and distribute their products. Independents, on the other hand, do not have this capacity, and must either subcontract with a major recording company or rely on an independent firm to manufacture and distribute their products. Independent distributors are limited to distributing products on a regional basis.[23]

Subcontracting arrangements can be beneficial to the majors as well as the independents.[24] Major recording companies have developed extensive manufacturing and distribution networks to take advantage of large economies of scale. These networks require an adequate flow of sound recordings to operate at optimal efficiency. The WEA (Warner/Elektra/Asylum) distribution network, for example, employs over 1,000 people in four regional distribution centers, and in 1987, it tracked over 1,500 line items.[25] By subcontracting its facilities to independents, the majors are able to operate at maximum efficiency, and, in return, the independents are able to price their products competitively.[26]

"Ibid., p. 7.

[19] OTA staff interview with record company executive, June 22, 1988; H. Rosen, R.I.AA, letter to J. Winston, OTA, May 2, 1989. Enclosure with comments on draft ch. 3, p. 8.

[20] Kronemyer and Sidak, op. cit., footnote 9, p. 267.

[21] Dick Weissman, "Record Companies," *The Musk Business: Career Opportunities and Self-Defense* (New York, NY: Crown Publishers, Inc., 1979), p. 36.

[22] FTC hearings, op. cit., footnote 14, p. 8.

[23] Ibid., p. 8.

[24] The following is taken from Kronemyer and Sidak, op. cit., footnote 9, p. 270.

[25] OTA staff interview with WEA executive, June 22, 1988.

[26] Kronemyer and Sidak, op. cit., footnote 9, p. 270.

Relative Advantages and Disadvantages[27]

The majors have comparative advantages over independents in manufacturing and distribution since they can more closely coordinate the release of the product with marketing, promotion, and sales efforts.[28] The independents can, however, incur lower fixed costs of manufacturing and distribution by subcontracting with the majors. Overall manufacturing and distribution costs are higher for major record companies, although the majority of the costs associated with recording music (i. e., studio time, producers' fees, musicians, etc.) remain the same regardless of the size of the recording company.[29]

Because of their stature,[30] and their ability to offer large bonuses and increased royalty rates, the majors are more able to attract well-established artists than are independents. A major label may also better be able to afford to risk a venture on new talent, and, in fact, may view its future in that market.[31] Although many new acts get their first "break" by signing with an independent recording company, the Recording Industry Association of America (RIAA) reports that the major distributors sell most of the new talent on the market and that the vast majority of records released by the major distributors are not by the proven successes.sp Sales from a few new talents may represent huge profits for record companies, since new artists rarely receive the high royalty rates of well-established artists. At the same time, new talent may also represent a substantial loss for a record company since most new recordings fail to make a profit.

Distribution

Distribution involves the sale of the product to retailers, wholesalers, subdistributors, and sometimes, directly to the consumers. It also involves warehousing and inventory control, and tracking of consumer buying habits. Music is "perishable" in the sense that sales depend on closely coordinating advertising, marketing, promotion, and pricing. The bulk of a recording's sales are generated during the short time in which it is a "hit." Thus, it is critical that an adequate supply of the product be available when demand peaks.[33]

The majors distribute over 83 percent of the recording industry's total volume,[34] approximately 10 percent of which is for independent labels.[35] With the exception of recordings the artist sells in conjunction with performances, independent distributors account for the remaining 17 percent. Independent distributors operate regionally in the United States. Most carry products from some of the larger independent labels, in addition to a large number from the smaller ones.

---

[27]The following is taken from Kronemyer and Sidak, op. cit., footnote 9, pp. 267-270.

[28]Ibid., p. 270.

[29]Ibid.

[30]FTC hearings, Op. cit., footnote 14, p. 10.

[31]H. Rosen, RIAA, letter to J. Winston, OTA, May 2, 1989. Enclosure with comments on draft ch 3, p. 7

[32]Ibid.

[33]FTC hearings, op. cit., footnote 14, p. 14.

[34]Ibid., p. 52.

[35]Ibid., p. 19.

All of the majors– with the exception of MCA, which has a foreign distribution contract with Warner Communications, Inc.– distribute their recordings outside of the United States and earn as much as half of their revenue from foreign sales. Foreign markets provide a greater opportunity for recording companies to spread their initial production costs and generate higher revenues.[36]

Retail Sales[37]

Record stores are responsible for over 60 percent in dollar volume sales of prerecorded music. Large-scale outlets are supplied directly by the recording companies; smaller operations purchase their merchandise at a slight markup from subdistributors, known as "one-stops." One-stops stock products from a wide range of labels, especially those of the major recording companies. One-stops offer record retailers the convenience of purchasing most, if not all, of their music from one source. Some one-stops specialize in one particular type of music; others carry a wide range of selections.

Mass merchandisers, such as department and discount stores, sell a high volume of prerecorded music, particularly hit records. Most mass merchandisers do not buy directly from the recording company, but rather enlist the services of a "rack jobber" to supply their music. Rack jobbers carry a narrow selection of prerecorded music, usually the top albums on the music trade paper charts, and thus limit their selections to current hits. In some cases the rack jobber actually leases the space in the department or discount store and owns as well as operates the record department.[38]

Recording companies also sell their product directly to the consumer via direct mail. Currently, there are two record clubs operated by the major recording companies:[39] the Columbia Record Club, part of Columbia House, a division of CBS, Inc., which distributes music from all the major labels with the exception of RCA; and RCA which distributes its music along with the products of other companies such as A&M, Arista, Capitol, Mercury, and London.[40] Smaller recording companies also operate their own mail order systems, but offer a narrower selection.

RECORDING CONTRACTS

Types of Recording Contracts

Crucial to the recording business are the contracts that define the business arrangements underlying record production and the allocation of revenues from the recorded material. Although there is no one standard recording contract today, recording agreements tend to be negotiated within one of four categories:[41] the exclusive artist recording contract, the "all-in" artist contract, the produc-

[36]Ibid., pp. 30-31.

[37]The following is taken from material incorporated in the FTC hearings; Dick Weissman, "HowRecords Are Sold and Distributed," *TheMusicBusiness: Career Opportunities and Self Defense* (New York, NY: Crown Publishers, Inc., 1979), pp. 60-67, and Adam White *(&.), Inside the Recording Industry: An Introduction to America's Music Business* (Washington, DC: Recording Industry Association of America, 1988).

[38]Weissman, op. cit., footnote 37, p. 62.

[39]H. Rosen, RIAA, letter to J. Winston, OTA, May 2, 1989. Enclosure with comments on draft ch. 3, p. 12.

[40]Sidney Shemel and M. William Krasilovsky, *This Business of Music (New* York, NY: Billboard Publications, 1985), with 1987 update, p. 56.

[41]The following is incorporated from Alan H. Bomser and Fred E. Goldring, "Current Trends in Record Deals, " *1984 Entertainment, Publishing, and the Arts Handbook,* Michael Myer and John David Viera (eds.) (New York, NY: Clark Boardman Co. Ltd., 1984), pp. 168- 169; Shemel and Krasilovsky, op. cit., footnote 40, p. 47; Harold Vogel, "The Music Business, " *Entertainment Industry Economics: A Guide For Financial Analysis* (New York, NY: Cambridge University Press, 1986), p. 145; and H. Rosen, RIAA, letter to J. Winston, OTA, May 2, 1989 (enclosure with comments on draft ch. 3, pp. 12-16).



Photo Credit: Ed Asmus, Courtesy of MTS, Inc.

Cassettes have become the most popular audio format.

tion contract, or the master purchase or master license contract. Under the exclusive artist recording contract, the recording company signs the artist directly to the label, and an in-house or independent producer is assigned to guide the project. Under an "all-in" artist contract, the recording company contracts directly with the artist, who furnishes his own independent producer. The artist is paid a lump sum, and then must pay the producer and other costs.[42] Under the production contract,[43] the recording company contracts with an independent production company representing the artist. The production company need not be a music producer per se, and in some cases may simply be the artist's manager.[44] Under the master purchase or master license contract, the artist provides finished

[42]H. Rosen, RIAA, letter to J. Winston, OTA, May 2, 1989. Enclosure with comments on draft ch. 3, p. 13.

[43]For a more detailed discussion of production contracts, see Bomser and Goldring, op. cit., footnote 41, PP. 168-169.

[44]H. Rosen, RIAA, letter to J. Winston, OTA, May 2, 1989. Enclosure with comments on draft ch. 3, p. 12.

master recordings to a production company which then sells or licenses them to a recording company.[45]

Within these categories, specific contract provisions are based on negotiations between the recording company and the individual artist or the production company representing him. These provisions may be contingent on the relative bargaining power of the recording artist – i.e., whether he is a new or well-established artist.

Contract Provisions

Length of Contract

In the past, a recording artist's contract typically ran for 1 year, with the recording company having the option to extend the contract period for up to four additional l-year periods. Now, however, recording contracts usually specify the number of albums to be delivered, with options for an additional number of albums to be delivered in the future.@ During this contract period, the artist is obligated to record exclusively for that recording company. This provision protects the recording company from having its artist start recording for another company after the original company has invested a great deal of time and money in developing that artist's career.[47] Although the contracts usually bind the record company to record the artist, they do not require that the recordings actually be released. Contract negotiations might stipulate that the artist is free of contractual obligations if the recording company fails to release the artist's work after a specified period (e.g., 6 months).

Other issues that the artist and the production company or recording company negotiate include default clauses, conditions under which a contract can be reassigned to another person or company, foreign release commitments, ownership of publishing rights, and the artist's right to audit the recording company's books.[48]

Ownership and Use of Masters[49]

Since a recording agreement is a contract for employment between the recording artist and the recording company, the company owns the recorded product as a "work-made-for-hire" under the U.S. copyright laws, unless otherwise provided.[50] Contract negotiations determine whether the masters and the copyrights of the sound recording would revert to the artist after a certain period. Most contracts also contain language addressing release, remastering, reissues, etc.

Recording Costs and Advances

In the United States, as in all countries but France,[51] all costs of recording and producing a musical work are recoupable out of an artist's royalties. It can cost from $100,000 to $500,000 or more to record and produce an album.[52] The initial investment for a new artist is usually over $200,000, excluding the costs of marketing, advertising, and producing a pro-

---

[45]Bomser and Goldring, op, cit., footnote 41, p. 168; Vogel, op. cit., footnote 41, p. 145.

[46]Bomser and Goldring, op. cit., footnote 41, p.172.

[47]Shemel and Krasilovsky, op. cit., footnote 40, p. 10.

[48]Vogel, op. cit., footnote 41, pp.153-154.

[49]Material taken from Bomser and Goldring, op. cit., footnote 41, p. 172; Shemel and Krasilovsky, op. cit., footnote 40, pp. 12-13.

[50]Bomser & Goldring, op. cit., footnote 41, p. 172; Shemel and Krasilovsky, op. cit., footnote 40) p.12.

[51]H. Rosen, RIAA, letter t. J. Winston, OTA, Ma, 2, 1989. Enclosure with comments on draft ch. 3, p. 18.

[52]H. Rosen, RIAA, letter to J. Winston, OTA, May 2, 1989. Enclosure with comments on draft ch. 3, p. 18.



Photo Credit: Capitol Records, Inc

Mastering room

motional video. Music videos have production costs of approximately $50,000 to $80,000 for new artists, and around $130,000 to $250,000 or more[53] for well-established artists. Overall, the costs of recording, manufacturing, advertising, producing a video, and promoting an album can run anywhere from $300,000 to $750,000 or more.[54]

The artist does not normally receive income from the sale of his recordings until all recording and some other costs are recovered.[55] Therefore, an artist, especially one who is just beginning, may need financial assistance to cover expenses. The recording company will often advance payments to the artist to assist with initial expenses. The size of an advance varies with each artist and each situation. In principle, these advances are recoupable from future royalties, but according to RIAA, artists are seldom forced to repay the advance if a

[53]H. Rosen, RIAA, letter to J. Winston, OTA, May 2, 1989. Enclosure with comments on draft ch. 3, p. 19.

[54]H. Rosen, RIAA, letter t. J, Winston, OTA, May 2, 1989. Enclosure with comments on draft ch. 3, p. 18.

[55]In addition t· recording costs, the record company may be able to recover partial artwork, promotion], packaging, and/or advertising fees.

recording does not sell.[56] Many albums do fail to recoup their recording costs; the recording industry estimates that 85 percent of all pop albums and 95 percent of all classical titles fail to recover their costs.[57]

In addition, some contracts may allow the recording company to recover its costs for all prior recordings made by the artist. In other words, if the artist had recorded three previous albums for which the recording company had been unable to recoup costs, the company might be able to recoup all losses before paying out any of the royalties made from the last and only successful album. Whether this is the case depends on contract negotiations and the relative bargaining power of the artist; according to the RIAA it seldom occurs.[58]

---

[56]H. Rosen, RIAA, letter to J. Winston, OTA, May 2, 1989. Enclosure with comments on draft ch. 3, p. 20.

[57]White, op. cit., fOOtnOte 3[7], p. 35.

[58]M. Cover, Recording Industry Association of America, telephone conversation with D. Wong, OTA, May 11, 1989.

Chapter 5

Copyright Royalties for Music and Sound Recordings

CONTENTS

	Page
ROYALTIES FROM THE SALE OF RECORDINGS	103
Recording Contracts and Royalties	104
Recording Contracts. ...o.	104
Royalty Base	105
Royalties From the Sale of CDs	107
ROYALTIES FROM MUSIC USED IN RECORDINGS	109
Compulsory Licenses	109
Mechanical Royalties	109
Harry Fox Agency	110
ROYALTIES FROM THE PERFORMANCE OF RECORDED MUSIC	111
Performing Rights Societies	112
Songwriter Organizations	114
Copyright Royalty Tribunal	115
PERFORMANCE RIGHTS IN SOUND RECORDINGS	117
Performance Rights Under U.S. Law	117
Arguments for and Against Performance Rights	119
ROYALTIES FROM HOME TAPING	120
Proposals for a Home-Taping Levy in the United States	120
International Perspectives on Tape Levies	120

Boxes

Box		Page
5-A	Performing Rights Societies: Logging Procedures	116
5-B.	Performing Rights Societies: Distribution of Royalties to Members	118
5-c.	How Performance Royalties Are Distributed in Other Countries	121
5-D.	Copyright Clearance Center	122
5-E.	Details of Proposed Blank-Tape Levy in S.1739	124

Tables

Table		Page
5-1.	Private Copying Royalties - Legislation and Implementation	132
5-2.	Taxation on Private Copying	133
5-3.	Private Copying Royalties - Distribution	134

Chapter 5
Copyright Royalties for Music and Sound Recordings

A royalty is a payment made to a copyright owner or performer for the use of his property. It maybe based on an agreed-on percentage of the income arising from the use of the property or on some other measure. This chapter describes the different systems that have been devised or proposed to collect and distribute royalty payments to copyright owners and performers.

The first section addresses how recording companies pay royalties to performers.

The second section discusses how copy-right owners of musical works (e.g. songwriters, publishers) collect royalties on "compulsory" and "mechanical" licenses granted to the companies that make recordings of their music. It also examines how these copyright owners receive royalties from public performances of their recorded music.

Various performing rights organizations collect and distribute royalties. The third section describes these organizations and the mechanisms they use to provide these services.

In the United States, copyright owners of sound recordings (e.g., record companies, performers) do not have the right to be compensated for public performances of their work. The fourth section discusses the arguments for and against providing compensation to copyright owners in sound recordings.

As home copying has become more prevalent, there have been proposals in the United States to place **a fee on** blank tapes or recording equipment to compensate composers, authors, musicians, artists, recording companies, and producers or production companies for private copying. The final section provides a detailed discussion of one proposed blank-tape levy scheme and the proposed system for allocating the royalties it would generate. In addition, the final section overviews tape-levy schemes either proposed or implemented in France, Australia, Belgium, the United Kingdom, Hungary, Iceland, West Germany, and Sweden. Tape-levy schemes for Austria, Finland, Portugal, Spain, and Norway are also considered.

ROYALTIES FROM THE SALE OF RECORDINGS

Recording artists are compensated in three ways for their services. *First,* they are paid union scale for their performances as determined, for vocalists by the American Federation of Television and Radio Artists (AFTRA) and, for instrumentalists by the American Federation **of** Musicians (AFM). Rates for feature artists are negotiable; backups are covered by labor agreements.[2] *Second,* artists are eligible to receive a share of the royalties from the sale of the recording. This share is determined by the contractual agreement negotiated either between the artist and the recording company or the artist and his or her producer, depending on the type of contracts *Third,* artists receive advances, ranging from

[1]Material for this section is incorporated from: Alan H. Bomser and Fred E. Goldring, "Current Trends in Record Deals, " 1984 ***Entertainment, Publishing, and the Arts Handbook,*** Michael Myer and John David Viera (eds.) (New York, NY: Clark Board man Company, Ltd., 1984), pp. 167-173; Sidney Shemel and M. William Krasilovsky, ***This Business of Music*** (New York, NY: Billboard Publications, 1985) (with 1987 update) ; Alan Siegal, "(Si Si) Je Suis un Rock Star," ***Breaking in*** to ***the Music*** Business (port Chester, NY: Cherry Lane Books, 19S6), pp. 89-133; Harold Vogel, "The Music Business," ***Entertainment Industry Economics: A Guide for Financial Analysis (New*** York, NY: Cambridge University Press, 1986), pp. 131- 157; Dick Weissman, "Record Company Contracts, " The ***Music Business: Career Opportunities and Self-Defense (New*** York, NY: Crown Publishers, Inc. 1979), pp. 52-59; Adam White (ed.), ***Inside the Recoding Industry. -An Introduction*** ***to America's Music Business*** (Washington, DC: Record ingIndustry Association of America, 1988); and interviews with record company executives.

[2]J. Golodner, personal communication, advisory panel meeting at OTA, Apr. 24, 1989.

[3]See ch. 4 for a more detailed description of recording contracts.

$15,000 to well over $1,000,000 for established artists, to help them with initial expenses.[4] These advances are, however, recoupable from the artists' future earnings.

Recording Contracts and Royalties

The four general types of recording contracts typically used in negotiations, either between the artist and the recording company or the artist and the producer, are conventions agreed to by both parties before work commences on a particular albums The artist's bargaining power may be contingent on such factors as whether he is a beginning artist or a superstar. Each type of contract stipulates what requirements each party must fulfill and how payment is to be made to those entitled to a share of the royalties.

Recording Contracts

In the *exclusive artist* recording contract, where the recording company directly signs the artist to the label, the recording company pays all costs of production and advances some money to the artist to help him pay for initial expenses. The artist receives royalties directly from the recording company, but only after all production costs and advances have been recovered.

In the *"all-in" artist contract,* the artist is signed to the recording company, but furnishes his own independent producer. Royalties from the sales of recordings (after all costs and advances are recouped) are paid directly to the artist, who then pays the producer from his share. The average royalty for a beginning pop/rock artist is 12 to 13 percent of the retail sale price, with 2 to 3 percent of that going to the producer; for a well-known artist, the minimum is 14 to 15 percent, and often 17 to 20 percent,[6] with 4 percent going to the producer.[7] These rates, however, may escalate after a specified number of sales.

In the *production contract,* the recording artist works with an independent production company, which then signs with a recording company. The production company pays for the costs of the "demos" or "masters," which are then submitted to the recording company. The recording company pays all costs of production either directly or indirectly: it either advances funds to the production company or pays the costs directly. The production company, producer, and/or the artist may *also be* granted an advance to help cover any additional costs. After all costs are recovered and all advances are recouped, the recording company pays the production company an "all-in" royalty, out of which the production company pays the artist and/or producer. The artist and producer are paid the percentage of the royalties stipulated in their contracts.[8] Royalty payments for the artist typically range from 10 to 12 percent of the 13 to 18 percent that the production company receives from the recording company.[9]

Under terms of a *master purchase contract,* the production company sells the masters of a sound recording to the recording company. The production company is reimbursed for all costs incurred in the manufacturing of the masters. Before any royalties are paid to the production company, however, these costs

[4] H. Rosen, Recording Industry Association of America, letter to J. Winston, OTA, May 2, 1989. Enclosure with comments on draft ch. 4, p. 1.

[5] H. Rosen, RIAA, letter to J. Winston, OTA, May 2, 1989.

[6] H. Rosen, RIAA, letter to J. Winston, OTA, May 2, 1989. Enclosure with comments on draft ch. 4, p. 2.

[7] Recording company executive, personal communication, Feb. 29, 1988.

[8] H. Rosen, RIAA, letter t. J. Winston, OTA, Ma, 2, 1989. Enclosure with comments on draft ch. 4, p. 3.

[9] Ibid.

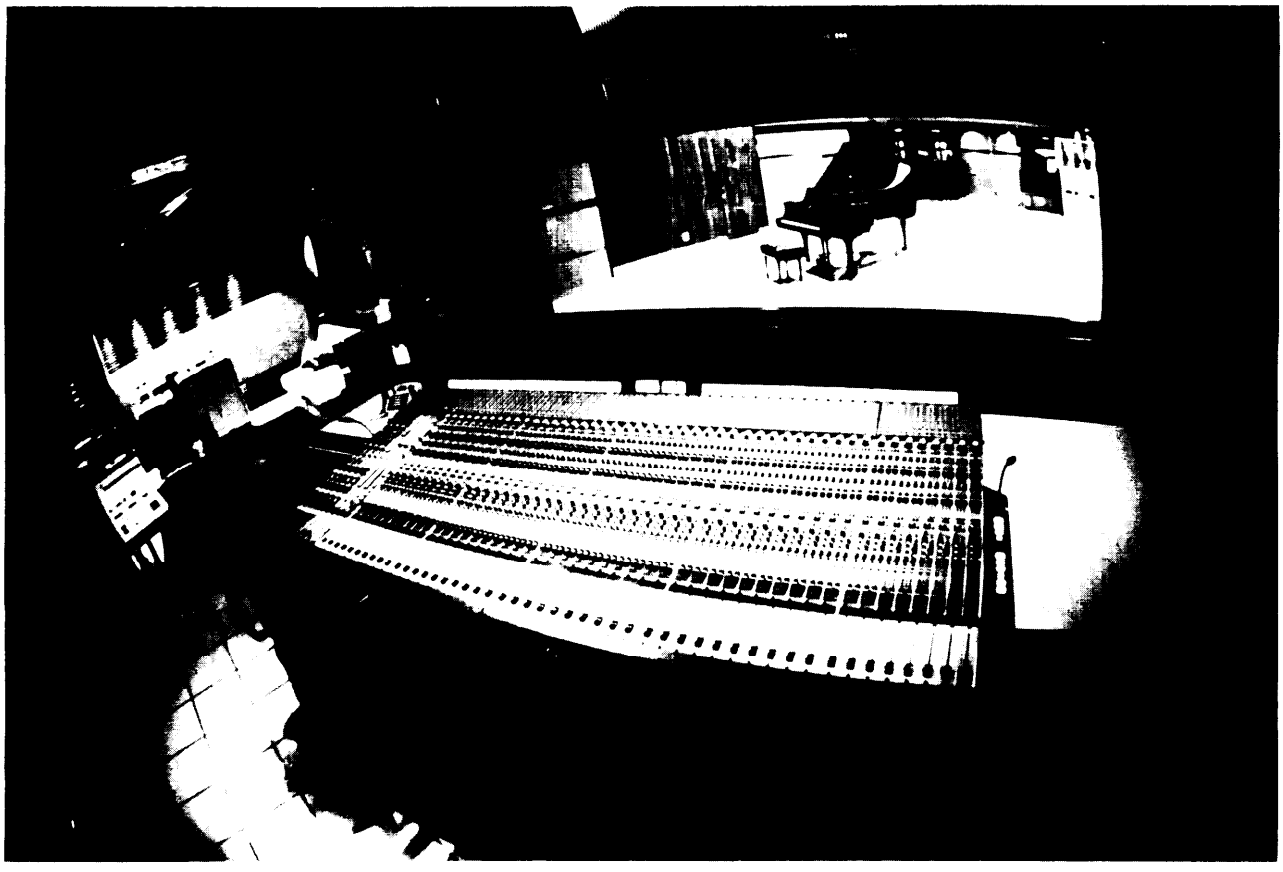

Photo Credit: The Robb Family, Cherokee Recording Studio

Modem recording studio.

and any other advances paid to the production company must be recouped. Then, the production company receives royalties based on 100 percent of the recordings sold, which usually account for 85 to 90 percent of shipments.[10] The artist, in turn, is paid through his production company.

Royalty Base

Royalties are either based on the manufacturer's suggested retail list price (e.g., $8.98) or are doubled when based on the wholesale price ($3.90 to $4.00), which could result in nearly a 28-percent rate for the artist (since wholesaling does not involve any packaging deductions).[11]

Recording companies pay royalties not on the number of recordings shipped, but on those recordings actually sold.[12] Most recording companies will also withhold a certain percentage of royalties for what they call

[10] Ibid.

[11] Bomser and Goldring, op. cit., footnote 1, p. 170; record company executive, personal communication, Feb. 29, 1988.

[12] Shemel and Krasilovsky, op. cit., footnote 1, p. 4.

"reasonable returns" in anticipation of unsold recordings likely to be returned. If recordings are not returned, royalties are paid.[13] Oftentimes, returned recordings are either recycled or redistributed at reduced prices. The artist receives minimal or no royalties on redistributed albums, since they are sold at the manufacturing cost or less.[14]

Artists receive no royalties on recordings given to radio stations or record stores for promotion. Recording companies believe that these free promotional albums expose the recording to a wider audience, which may then purchase its own copies.

Record Club Sales[15]

Artists are usually paid half of the recording company's receipts for record club sales,[16] and no royalty on "bonus" or "free" albums given away to the club's subscribers. Record clubs normally obtain a license for the masters and pay a royalty to the recording company based on 85 percent of sales— a royalty of approximately 9.5 percent of the club's member price, less a packaging deduction.[17] Record club owners argue that they should not have to pay royalties for free albums since they are providing the recording company with an alternative means for distribution. They deem it necessary to make special offers and bonuses as incentives to subscribers because of large membership turnovers. An artist can, however, negotiate a clause in the contract that limits the number of albums that can be given away as bonuses.

Foreign Sales

Royalties from foreign sales are usually computed at a rate approximately half that of sales in the United States. The lower foreign royalty rate reflects the fact that companies without foreign affiliates must lease their products to other firms for foreign distribution. The U.S. recording company receives the royalties and then distributes a portion to the artist based on 100 percent of sales. In cases where the company has its own foreign subsidiary, there is no royalty paid to a third party, and the artist receives up to 75 percent of the domestic rate. Some companies with their own foreign affiliates may lease their products to a subsidiary if it is believed that the product will not sell in the foreign territory.[18]

Packaging

Packaging deductions are part of the contract negotiations and may vary considerably.[19] Deductions typically range from 10 to 12 percent of the retail price for records, 15 to 20 percent for cassettes, and 25 to 30 percent for compact disks, depending on the cost of the cover and artwork.[20] Since the recording company assumes the packaging costs, it believes that the artist should be paid royalties only on the music and not on the artwork. Yet, except in instances where there are very low record or tape sales, the costs for the cover and artwork are much lower than the packaging deduction.[21]

---

[13] H. Rosen, RIAA, letter to J. Winston, OTA, May 2, 1989. Enclosure with comments on draft ch. 4, p. 4.

[14] Ibid.

[15] Material taken from Shemel and Krasilovsky, op. cit., footnote 1, p. 57.

[16] H. Rosen, RIAA, letter to J. Winston, OTA, May 2, 1989. Enclosure with comments on draft ch. 4, p. 5.

[17] Shemel and Krasilovsky, op. cit., footnote 1, p. 57.

[18] Weissman, op. cit., footnote 1, p. 55"

[19] H. Rosen, RIAA, letter t. J. Winston, OTA, May 2, 1989. Enclosure with comments on draft ch. 4, p. 6.

[20] Bomser and Goldring, op. cit., footnote 1, p. 170.

[21] Ibid.

Royalties From the Sale of CDs[22]

When compact discs (CDs) were first introduced in the United States in 1983, their retail selling price was somewhere in the 30 dollar rang[23] because of their high manufacturing and production costs. Since recording companies did not expect a high volume of CD sales for the first few years, they paid the same royalty on CDs that they paid on comparable vinyl LPs, regardless of the differences in their prices. They usually followed this practice for the first 3 years of the contract, after which they renegotiated the royalty on CD sales to reflect any changes in the market place.[24] Some companies, however, renegotiated rates 3 years from the release of the artist's first CD rather than from the beginning of the contract period.[25] Recording companies deducted 25 percent for packaging, a higher percentage than the typical deduction for conventional LPs.[26] This practice continued for 2 or 3 years. Some successful artists were able to negotiate a "favored-nations" clause that would automatically increase their royalty payments if the recording company increased its royalty rates for newly signed artists.

Recording companies have recently had to reconsider the issue of CD royalties. With the initial costs of research and development now recovered, the cost of raw CD production has dropped.[27] Price margins are decreasing[28] and manufacturing costs for the discs themselves are down to about $1.29 As a result, CD prices are gradually beginning to drop as sales rise. The format's enormous success has come in large part from sales to relatively affluent, older consumers who purchase CD players and then replace their favorite LPs with CDs.

With higher profit margins than records or tapes, CDs have become the most profitable format for companies: a CD that may have cost $5 to $6 to produce and distribute will sell for $10 or more. Artists are beginning to demand higher rates for CD royalties now that the contractual clauses allowing for automatic increases are beginning to expire.[30]

Recording companies, forced to reevaluate their royalty payment systems, face several problems. First, there are no "suggested retail list prices' *'per se* for most CDs,[31] as compared to the suggested retail prices listed for LPs. Most recording companies pay a royalty rate on LPs based on their suggested retail list prices, which remain fairly constant, rather than on their wholesale prices, which constantly change. Using this royalty basis, wholesale prices can be raised without affecting retail prices. For CDs without a suggested retail price, however, the recording companies base royalties on the constantly changing wholesale prices of CDs.

---

[22]Material for this section was taken from Steve Fiott, "Declaration of Independents," *Digital* Au&o, vol. 5, No. 3, November 1988, p. 36, Sidney Shemel and M. William Krasilovsky, ***This Business of Music,*** op. cit., footnote 1, pp. 7-8; Jean Rosenbluth and Ken Terry, "CD Royalties on the Upswing: Most Acts Benefit From Lower Costs," ***Billboard***, vol. 100, No. 4, Jan. 23, 1988, pp. 1, 84; Alan Siegal, "(Si Si) Je Suis un Rock Star," op. cit., footnote 1 , pp. 120-123, and interviews with record company executives.

[23]Siegal, "(Si Si) Je Suis un Rock Star," op. cit., footnote 1, p. 121.

[24]Ibid., p. 121; interview.

[25]Siegal, "(Si Si) J'e Suis un Rock Star," Op. Cit., footnote 1, p. 121.

[26]Shemel and Krasilovsky, op. cit., footnote 1, p. 7, Rosenbluth and Terry, op. cit., footnote 22, p. 84.

27Fiott, op. cit., footnote 22, p. 36.

[28]Ibid.

[29]Record company executive, personal communication, June 21, 1988.

[30]Rosenbluth and Terry, op. cit., footnote 22, pp. 1, 84; interview.

31 The following is based on personal communication With a record company executive, Dec. 13, 1988.
There was some disagreement among advisory panel members as to the prevalence of CD list prices and the degree to which they correspond to retail prices.



Photo Credit: Ed Asmus, Courtesy of MTS, Inc.

Compact discs have become a profitable format

The problem is further complicated because recording companies charge various distributors different prices. Retailers are charged higher prices for items than are subdistributors, since subdistributors must also warehouse the merchandise. Subdistributors comprise 95 percent of a recording company's clients; the other 5 percent are retailers. To compensate for the decrease in royalties caused by the lower prices charged to subdistributors (the current subdistributor price is approximately $9.00),[32] a provision called a "CD uplift" is usually applied to this price. The "CD uplift" increases the wholesale price **125 percent over the original wholesale price, less a packaging deduction of approximately 20 to 25 percent. Using the increased wholesale price, the royalty rate is then based on a percentage of sales. The artist is paid a percentage of that royalty base – usually 12 to 15 percent – depending on the provisions of the recording contract. No royalties are paid on free or promotional copies of CDs.**

With the uplift, an artist might earn more royalties from a "premium" CD than from the same analog recording.[33] Once a CD is discounted, however, royalties may be drasti-

[32]Record company executive, personal communication, Dec. 13, 1988.

[33]Record company executive, personal communication, June 21, 1988.

cally reduced.[34] As in the case of LP album cut-outs, the artist is entitled to only half of the full royalty rate, less a packaging deduction.

In general, recording industry observers see CD royalty rates continuing to rise, especially now that the initial research and development costs of the CD have been written off.[35]

ROYALTIES FROM MUSIC USED IN RECORDINGS

Compulsory Licenses[36]

The Copyright Act of 1976 grants the copyright owner of a musical composition the exclusive right to be the first to record and distribute phonorecords of the protected composition within the United States, or to authorize others to record and distribute.[37] Once that right has been exercised, anyone who makes and distributes a competing rendition of the musical composition must obtain what is called a "compulsory" license from the copyright owner and must pay royalties on phonorecords made and distributed under the license. While ensuring copyright owners the opportunity to be the first to record and distribute their works and providing them payment for all subsequent uses, the compulsory licensing system also prevents copyright owners from monopolizing the future use of a musical composition.

Licenses set forth the conditions and royalties for each recording made and distributed. The new recording must be distinguishable from the original-duplication or direct rerecording of the original without permission of the copyright owner constitutes copyright infringement. In addition, the phonorecord must be distributed to the public for private use only. A compulsory license does not authorize the licensee to distribute phonorecords for commercial use, such as background music services, nor does it authorize the public performance of the musical composition.

To obtain a compulsory license, the intended user must notify the copyright owner within 30 days after the phonorecords are manufactured and before they are distributed. If the copyright owner is not known, the licensee files a notice with the U.S. Copyright Office. Generally, a copyright owner must be identified in the registrar or other public records of the Copyright Office in order to collect royalties from a compulsory license.

Although the intended purpose behind the compulsory license was to encourage the flow of creativity by ensuring certain rights to the copyright owner, some people think that compulsory licenses restrict creativity. Canada recently abolished their compulsory license for just this reason.[38]

Mechanical Royalties

Record companies must make automatic payments to songwriters and publishers for the right to make and sell copies of their recorded works. A copyright owner receives a statutory royalty rate depending on the length of the song, the number of songs on the al-

---

[34] Rosenbluth and Terry, op. cit., footnote 22, p. 84.

[35] Ibid.

[36] Material for this section is taken from: Robert Thorne, "Compulsory Licensing: The Music Makers as Money Makers," *1985 Entertainment, Publishing and the Arts Handbook,* John David Viera and Michael Meyer (eds.) (New York, NY: Clark Board man Co., Ltd., 1985), pp. 281-294.

[37] Title 17, U.S. Code, section 115.

[38] Staff member of Copyright Office, personal communication, Feb. 6, 1989.

bum, and net sales of the recording.[39] These deductions, called "mechanical royalties," are taken from the record company's receipts, and not from the artist's share.[40]

The Copyright Royalty Tribunal determines mechanical royalty rates, which it adjusts every 2 years on the basis of the Consumer Price Index. The current rate is 5.25 cents for each musical composition or one cent per minute or fraction thereof, whichever is greater. The rate cannot be adjusted below 5 cents per musical composition or .95 cents per minute, nor can it rise more that 2 percent per adjustment period.[41]

Compulsory mechanical license fees are seldom set at the statutory level, however. The user can often negotiate a lower rate with the copyright owner. For example, when the owner is related to the recording artist, therecord company may pay rates only three-quarters of the statutory rate. Also, certain classes of recordings, such as recordings distributed free, may be exempted.[42] In addition, an artist's contract often provides for future songs either written or cowritten by him to be brought under the recording company's "control." Recording companies often secure reduced mechanical royalty rates for these "controlled compositions."

Harry Fox Agency[43]

The Harry Fox Agency was established in 1927 and is a wholly-owned subsidiary of the National Music Publishers' Association (NMPA).[44] It currently represents over 6,000 publishers, not all of whom belong to NMPA. The agency is responsible for authorizing recording companies to make and distribute phonorecords of copyrighted music owned or controlled by the publishers. It licenses approximately 75 percent of U.S. music on records, tapes, CDs, and imported phonorecords, plus music used in films, on T.V., or in commercials. The agency also collects and distributes mechanical royalties for most U.S. publishers.

The Harry Fox Agency licenses copyrighted musical compositions for commercial records, tapes, CDs, etc. distributed:

- to the public for private use;
- for use in audio/visual works (synchronization), including motion pictures, broadcast and cable T.V. programs, and CD videos;
- for use in broadcast commercial advertising;

---

[39] Net sales equal gross sales, less returns. Record company executive, personal communication, June 2, 1989.

[40] H. Rosen, RIAA, letter to J. Winston, OTA, May 2, 1989. Enclosure with comments on draft ch. 4, p. 13.

[41] "The Harry Fox Agency, Inc.: Licensing Service of the National Music Publishers' Association," pamphlet published by the Harry Fox Agency, Inc., 1988, p. 6.

[42] Alan H. Siegal, "Lexicon Plus," *Breaking in to the Music Business* (Port Chester, NY: Cherry Lane Books, 1986), p. 14.

[43] The following is taken from material contained in Shemel and Krasilovsky, op. cit., footnote 1; "The Harry Fox Agency, Inc.: Licensing Service of the National Music Publishers' Association," op. cit., footnote 41; and "The National Music Publishers' Association," pamphlet published by the National Music Publishers' Association.

[44] The National Music Publishers' Association is one of three music publishers' trade associations in the United States. The other two are: the Music Publishers' Association of the U. S., specializing in educational and concert music, and the Church Music Publishers' Association.

- for use in recordings for public use (i.e., background music, in-flight music, computer chips, syndicated radio services, and even novelty greeting cards).

It also licenses performing rights for theatrical motion pictures in the United States.

In addition to issuing licenses and collecting royalties, the Harry Fox Agency represents publishers in proceedings against delinquent licensees and infringers, and audits all licensed record companies and licensees who use copyrighted musical compositions. The agency serves as an information source, clearinghouse, and monitoring service for licensing musical copyrights. It maintains extensive files of information on the public domain status of compositions for purposes of issuing licenses. It also works with the international collection societies.

The Harry Fox Agency retains a commission from the royalties collected on behalf of its members: 4.5 percent from mechanical licenses from music; 10 percent on synchronization licenses for films, with a maximum of $250 per composition; 10 percent of royalties on T.V., home video, and commercial synchronization licenses, with a maximum of $2,000 per composition; and 10 percent on electrical transcription licensing (syndicated radio, background music, etc.), with a maximum of $2,000 per composition.

ROYALTIES FROM THE PERFORMANCE OF RECORDED MUSIC

The 1976 Copyright Act gives copyright owners the exclusive right to perform their works publicly. The Act defines a "public" performance as one performed or displayed in a place open to the public or a place where a substantial number of persons outside of a normal circle of family and social acquaintances is gathered, or any performance that is transmitted or otherwise communicated to the public, by any means or process, regardless of whether the public receives the transmission in the same location or time as the original performance.[45]

Musical works are included as part of this right, but sound recordings are not. Thus, the copyright owner of a recorded song, such as the composer or music publisher, is entitled to be compensated for public performances, whereas the copyright owner of the sound recording, such as a record company, is not. Virtually every user other than the copyright owner who publicly performs music must obtain a license from the copyright owner, or be liable for infringement. The user is obligated to seek out the copyright proprietor and obtain permission, or to contact the appropriate performing rights society to obtain a license.[46]

[45]Title 17, U.S. Code, sec. 101.

[46]Bernard Korman and I. Fred Koenigsberg, "performing Rights in Music and performing Rights Societies, " ***Journal of the Copyright Society of the USA, vol. 33, No. 4,*** July 1986, pp. 347-348.

Performing rights organizations were creatd to make the licensing of music both easier and more economical for the hundreds of thousands of commercial users of music.[47] Through the use of "blanket licenses," users of music are able to perform copyrighted music without having to negotiate a separate license with each copyright owner, or having to keep logs to account for each performance.[48]

Performing Rights Societies[49]

There are three performing rights organizations in the United States – the American Society of Composers, Authors, and Publishers (ASCAP), Broadcast Music Inc. (BMI), and the Society of European Stage Authors and Composers (SESAC). Each has its own system of determining how much airplay each recording receives and to how much of the collected revenues each copyright owner is entitled.

ASCAP, founded in New York in 1914, currently includes approximately 40,000 composers, lyricists, and music publishers.[50] It is the oldest and largest (in terms of billings)[51] performing rights licensing organization in the United States and is wholly owned and operated by its members. Its board of directors includes 12 writer directors, who are elected by writer members, and 12 publisher directors, who are elected by publisher members.

Broadcast Music, Inc.[52] was formed in 1940 by a group of about 600 broadcasters who boycotted ASCAP music. BMI stresses an "open door" policy, inviting all writers to join, especially those in the fields of country and soul music. Currently, BMI has a membership of approximately 90,000 composers, writers, and publishers and a repertoire of over 1.5 million titles.[53] It is the world's largest music licensing organization in terms of members or affiliates.[54]

Together, ASCAP and BMI collect over 95 percent of all U.S. performing rights royalties. SESAC, Inc.,[55] which represents approximately 2,200 writers and 1,200 publishers, collects the remaining 5 percent of U.S. performing rights royalties.[56] SESAC has a smaller, more specialized repertory than that of ASCAP and BMI[57] — about 155,000 songs.[58]

Organizationally, SESAC also differs from ASCAP and BMI. As a private licensing company owned and run by the Heinecke family since 1930,[59] SESAC, after deducting operat-

---

[47] The ASCAP License: It Works for You," pamphlet published by ASCAP; "BMI and the Broadcaster: Bringing Music to America," pamphlet published by BMI, 1988.

[48] Korman and Koenigsberg, op. cit., footnote 46, p. 335.

[49] Material for this section was taken from: Korman and Koenigsberg, op. cit., foonote 46, pp. 332-367; Shemel and Krasilovsky, op. cit., footnote 1, pp. 182-201.

[50] "ASCAP: The Facts," a pamphlet published by ASCAP, 1987.

[51] Vogel, op. cit., footnote 1, p. 135.

[52] Material for this section is taken from "BMI And the Broadcaster Bringing Music to America," op. cit., footnote 47.

[53] "BMI and the Broadcaster: Bringing Music to America," op. cit., footnote 47.

[54] "BMI, Your Bridge to the World's Greatest Music: A Guide to Music Listening," a pamphlet published by BMI, 1987.

[55] SESAC, inc. was formerly known as the Society of European Stage Authors and Composers. In those days, its repertoire was comprised mostly of American and European classics, along with religious and country music. They have since changed their name to reflect the expansion in their repertoire to include all categories of music. ("SESAC: Information for Prospective Writers and Publishers," a pamphlet published by SESAC)

[56] Vogel, op. cit., footnote 1, pp. 135-136.

[57] Jack C. Goldstein, "For th. Record: Questions and Answers On the Performance of Copyrighted Music" (Houston, TX: Arnold, White & Durkee, 1987), p. 1.

[58] Interview with SESAC executive, Feb. 9, 1989.

[59] "SESAC: Information for Prospective Writers and Publishers," a pamphlet published by SESAC.

ing costs and overhead expenses from the revenues it collects, distributes only half of the remainder to the copyright owner and retains the balance. GO ASCAP and BMI, on the other hand, are nonprofit organizations. After deducting operating expenses from royalty revenues collected, they distribute the balance to their members or affiliates.Gl Recently, ASCAP's operating expenses have run about 18 to 19 percent of its total revenues[62] and BMI's 15 to 16 percent.[63]

Licenses[64]

Both ASCAP and BMI charge radio and television broadcasters a licensing fee based on a percentage of the broadcaster's net revenues, rather than on the extent of the use of their music. Broadcasters pay fees either on a "blanket" license, which is based on a small percentage of the net revenues from sponsors of all programs, or on a "per program" license, which is based on a larger percentage of net revenues, but only on the specific programs licensed.[65] Both the "blanket" license and the "per program" license cover the entire repertory of songs for a period of years. BMI also offers broadcasters a license for noncommercial use and one for noncommercial educational use.[66]

SESAC, like ASCAP and BMI, licenses virtually the entire broadcasting industry.[67] But whereas ASCAP and BMI base their broadcast licensing fees on the gross receipts of the station, SESAC bases its licenses on fixed determinants such as station location, hours of music broadcasting, and the station's advertising rates.

Other users of music–bars, restaurants, taverns, etc. – are also required to obtain a license from each performing rights society that represents the copyright holders of the music they are using. In the case of live performances, performing rights societies license the establishment owner rather than the musicians because they believe that it is the establishment owner who derives the ultimate benefit from the performance.[68] It is also more practical and much easier to track performances in establishments than to locate and license the musicians, who are rarely ever in the same place for a long period of time.[69]

Because these users of music are harder to identify, locate, and contact than are broadcasters, who are licensed by the Federal Communications Commission (FCC), performing rights organizations sometimes send field representatives to visit establishments that might be using their music.[70] Often they learn about these establishments through local newspapers or magazines, or through word of mouth. ASCAP has 23 district offlces[71] lo-

[60] Shemel and Krasilovsky, op. cit., footnote 1, p. 1S4.

[61] Goldstein, op. cit., footnote 57, Korman and Koenigsberg, op. cit., footnote 46, p, 363; Shemel and Krasilovsky, op. cit., footnote 1, p. 184.

[62] Korman and Koenigsberg, op. cit., footnote 46, p. 363.

[63] BMI executive, personal communication, July 12, 1988.

[64] Material for this section is taken from Korman and Koenigsberg, op. cit., footnote 46, pp. 332-367.

[65] Korman and Koenigsberg, op. cit., footnote 46, p. 359.

[66] "BMI and the Broadcasters: Bringing Music to America," op. cit., footnote 47.

[67] Shemel and Krasilovsky, op. cit., footnote 1, p. 156.

[68] Korman and Koenigsberg, op. cit., footnote 46, p. 360.

[69] Ibid.; see also Goldstein, op. cit., footnote 57, pp. 6-7.

[70] Korman and Koenigsberg, op. cit., footnote 46, p. 360.

[71] Ibid.

cated throughout the country, and BMI has 9 regional offices,[72] whose job it is to locate and license these establishments.

If an establishment refuses to obtain a license, yet continues to use copyrighted music without permission, legal action may follow.[73] Copyright infringers often end up paying more in statutory damages than they would have paid in licensing fees.[74] In addition, the infringer is still required to obtain a license to continue playing copyrighted music at the establishment.

Foreign Licenses[75]

All three performing rights societies grant to their licensees the right to perform all works contained in their repertory, including works of foreign origin. Each has its own agreements with foreign performing rights societies. Most countries only have one performing rights society representing its writers and publishers, so that a single foreign society will usually represent all three U.S. societies. ASCAP, BMI, and SESAC collect fees in the United States from users of copyrighted foreign music on behalf of their respective foreign societies, and in return, these foreign societies collect fees in their country from users of copyrighted American music.

Songwriter Organizations

Songwriters may get additional help in collecting their royalties through membership in the Songwriters Guild.[76] The Songwriters Guild[77] is a voluntary national songwriters' association, comprising approximately 4,000 songwriters worldwide and representing all types of music, including motion picture and television scores as well as commercials. For those members who do not control their own publishing rights, the Songwriters Guild collects royalties from publishers for sheet music, song portfolios, recordings, tapes, motion picture, and television uses. Each year, the Guild selects one major music publisher and several small and medium-sized publishing firms and conducts thorough audits of their books. According to the Guild, over the years, they have recovered over $6 million that might not otherwise have been paid to writers. The Guild also maintains records of royalty payments for 6 years and a file of all contracts submitted.

One stated goal of the Songwriters Guild is to develop the talents of young songwriters[78] and to protect them in their dealings with publishers.[79] It holds special seminars and workshops where writers share their ideas or

---

[72] See "Songwriters and Copyright: Questions and Answers," a pamphlet published by BMI, 1987.

[73] Korman and Koenigsberg, op. Cit., footnote 46, p. 362; Goldstein, op. cit., footnote 57, p. 2.

[74] Korman and Koenigsberg, op. cit., footnote 46, p. 363; Goldstein, op. cit., footnote 57, p. 8; The ASCAP License: It Works for You," op. cit., footnote 47.

[75] Material for this section is based on: Shemel and Krasilovsky, op. cit., footnote 1, pp. 196- 197; "BMI, Your Bridge to the world's Greatest Music: A Guide to Music Listening," op. cit., footnote 54; and "ASCAP: The Facts," op. cit., footnote 50.

[76] American Guild of Authors and Composers, "Record World Salutes the 50th Anniversary of AGAC/The Songwriters Guild," newsletter published by the Songwriters Guild, Apr. 10, 1982.

[77] The Songwriters Guild has gone through a number of name changes since its inception in 1931. It was first known as the Songwriters Protective Association until the mid-sixties, when its name was changed to the American Guild of Authors and Composers, and just recently it was expanded to AGAC/The Songwriters Guild.

[78] The Guild maintains the AGAC Foundation, a nonprofit educational organization that provides young writers with the opportunity to learn about the music business through university scholarship grants and various Guild programs.

[79] To protect the rights of songwriters in their dealings with publishers, the Songwriters Guild recommends the use of a standard guild contract (developed over the years), that extends the period in which the writer may recapture his/her foreign copyrights from 28 years to 40 years from the date of agreement (or 35 years from the initial release of the sound recording, whichever is earlier). In addition, the Guild contract contains provisions that give the writer a right of recapture if the publisher fails to obtain a recording of a song within a specified time period (not to exceed 12 months). Although the Guild encourages songwriters to use this form of contract in all of their dealings with publishers, songwriters do not make frequent use of this contract. Copyright Policy Planning Advisor, U.S. Copyright Office, personal communication, Feb. 6, 1989.

materials with peers and receive advice from professional songwriters, producers, recording artists, and music publishers.

For writers who choose to control their publishing rights, the Guild offers a service called the Catalogue Administration Plan (CAP). CAP assists songwriters in registering, assigning, and renewing copyrights; collects and pays royalties; and registers songs with one of the three performing rights societies. The fee for this service is 2 percent of the publisher's performance income and 7.5 percent of all other income.

In addition to a copyright renewal service, the Guild also provides other services, such as securing medical and life insurance, reviewing songwriting contracts, financially evaluating song catalogues, and administering estates to protect the heirs of its members. The Songwriters Guild also promotes legislation affecting songwriters' copyrights. It has advocated legislation raising the mechanical rates paid to publishers and songwriters by users of their songs.

Another major songwriters' organization, the National Academy of Songwriters[80] (NAS), formerly known as the Songwriters Resources and Services, does not become involved directly in the distribution of royalties to its members. NAS is a nonprofit organization dedicated to supporting and encouraging songwriters and to advancing the songwriting profession. It was founded in 1973 with the goal of providing songwriters the opportunity to meet and establish important relationships with music industry professionals and other songwriters. Its membership consists not only of songwriters, but also of publishers, producers, artists, and recording company executives.

NAS manages several services that match songwriters to collaborators or songwriters to publishers, producers, and artists who are looking for songs. NAS also sponsors many activities that give members the opportunity to work with others in the songwriting community. It sponsors weekly workshops where members can have their songs critiqued by peers and representatives of major publishing and recording companies. For a nominal fee, songwriters outside of the Los Angeles area can mail in songs to be critiqued. In addition to operating a toll-free line for music-related questions, it also conducts seminars, where guests are invited to discuss the various aspects of songwriting.

NAS also assists in the development of local songwriting organizations throughout the country, and provides members with health insurance coverage, discounts on legal services, books, and tapes, and a 10-percent discount on classes offered in the UCLA Extension Songwriting Program.

Copyright Royalty Tribunal[81]

The Copyright Royalty Tribunal (CRT) was created by the Copyright Act of 1976 and began operations shortly before the effective date of the act. It currently is made up of three Commissioners,[82] who are appointed by the President of the United States with the advice and consent of the Senate, three assistants, and a general counsel.

---

[80] National Academy of Songwriters membership information.

[81] Material for this section is based on: Office of the Federal Register, National Archives and Records Administration, *The United States Government Manual 1988/89* (Washington, DC: U.S. Government Printing Office) June 1, 1988, p. 62; Copyright Royalty Tribunal, "Copyright Royalty Tribunal Summary Fact Sheet, " November 1988; and Robert Cassler, CRT, letter to OTA, Apr. 28, 1989.

[82] The CRT is authorized to have five Commissioners, but since September 1984, the Tribunal has never had more than three– a ball, H.R. 1621, is pending to reduce permanently the number of Commissioners to three. Two of the five initial Commissioners' terms were for 5 years; the other three Commissioners's terms are for 7 years – the purpose of this was to stagger the Commissioners' terms. (Robert Cassler, CRT, letter to OTA, Apr. 28, 1989.)

Box 5-A–Performing Rights Societies Logging Procedures

ASCAP

Each performing rights society has its own method of logging programs to determine the amount of royalties to be paid to its constituents. American Society of Composers, Authors and Publishers (ASCAP) surveys its users of recorded music to obtain a rough estimate of how much airplay a particular song receives. It conducts a complete census of all performances on network television, and in concert halls, educational institutions, certain wired-music services, and a group of nonbroadcast, nonconcert licensees such as circuses and ice shows. ASCAP must randomly sample all other performances.

For example, local television station performances are sampled by means of audiotapes, TV ***Guide*** listings, and cue sheets, which are detailed listings of all music on a program, usually furnished by the program producer. Each year 30,000 hours of local television programs are surveyed.

ASCAP samples over 60,000 hours of local radio hours each year. Local radio stations are tape-recorded in 6-hour segments. Outside consultants send taping schedules directly to the people in the field, so neither the stations nor ASCAP's office staff know in advance which stations are being taped or when. This system relies heavily on the ability of ASCAP'S staff to correctly identify each song when the tapes are analyzed-a time-consuming and costly task. I

The majority of ASCAP's "general licensees" (e.g., restaurants, bars, etc.) are not surveyed because of the time and cost factors. Instead, ASCAP uses feature performances on radio and television as "proxies" for the distribution of these shares.

BMI

Broadcast Music Inc. (BMI) uses music broadcast by a scientifically chosen sample of stations as the basis for its quarterly distribution of royalties to songwriters, composers, and copyright holders.[2] Each licensee is asked to supply a station-prepared log of all music performed in a particular week, predetermined by BMI. The names of the writers and publishers as well as the name of the artist are recorded on this log, thus eliminating the problems with identifying each song. The station is notified in advance which week to log, and BMI strives to keep the list secret from publishers and writers, An independent accounting firm determines which stations are being logged and when, so that no BMI employee has prior knowledge of what stations are being logged.

For performances shown on television, BMI uses an extensive national database of information about network, syndicated, and cable programming and details the use of music in those programs listed by TV ***Guide.***

SESAC

The Society of European Stage Authors and Composers (SESAC) does not have a system of accurate local station logging procedures. It relies instead on reviews of network logs, limited spot checking of local stations, and trade paper charts to determine the amount of airplay received by a particular song.

I Dick Weissman, "Performing Rights Societies," ***The Music Business: Career Opportunities and Self-Defense (New*** York, NY: Crown Publishers, Inc., 1979), p. 83.

[2]"BMI and the Broadcaster: Bringing Music to America, " op. cit., footnote 47.

Under the compulsory licensing provisions of the Act, the Tribunal is responsible for determining and distributing the copyright royalties collected for retransmissions of broadcast signals by cable systems and the public performance of music on jukeboxes. It is also responsible for determining the royalty rates or phonorecords and for certain public broadcast transmissions, although the distribution of the royalties, in these cases, is left up to the parties involved. These transmissions involve the use of published, nondramatic compositions and pictorial, graphic, and sculptural works by noncommercial broadcasting stations. Royalties collected from the compulsory licenses for making and distributing phonorecords are distributed either directly to the copyright owners or their desig-

nated agents (in most cases, the Harry Fox Agency).

In recent years the Tribunal has been given the additional responsibilities of:

- distributing the satellite carrier copyright royalties granted by the Satellite Home Viewer Act of 1988, which allows for the retransmission of broadcast signals directly to satellite dish owners for private viewing; and
- monitoring private negotiations between music owners and jukebox operators for private jukebox licenses intended to supersede the jukebox compulsory license.

The CRT proceedings are intended to balance the relative harms and benefits among owners and users of copyrighted materials and to increase public access to creative works. Several years ago, however, the Tribunal was criticized for having failed to regulate copyright compulsory licenses as they were intended to be administered.[83] According to the CRT, however, these criticisms are unfounded, especially given the litigious nature of the parties involved.[84]

PERFORMANCE RIGHTS IN SOUND RECORDINGS[85]

Performance Rights Under U.S. Law

Sound recordings, as defined by public law, include all works that result from the fixation of a series of sounds (excluding those accompanying motion pictures or other audio-visual works) regardless of the nature of the material objects in which they are embodied (i.e., disks, tapes, or other phonorecords).[86]

United States copyright law does not provide for copy-right owners of sound recordings — usually performers, producers, or recording companies — to receive compensation for public performances of the recording. Authors and composers are, however, compensated for the public performance of their works through performing rights organizations.

Performers and producers have argued vehemently that U.S. copyright law should be amended to include a "performance right." They believe that copyright holders of sound recordings do not receive fair compensation

[83]The Copyright Royalty Tribunal Sunset Act of 1985 was referred to the House Committee on the Judiciary and its Subcommittee on Courts, Civil Liberties, and the Administration of Justice. This bill sought to terminate the services of the Copyright Royalty Tribunal and transfer its functions to the Register of Copyrights. Hearings were held, but no legislation emerged from the committee.
For more information, see U.S. Congress, House Judiciary Committee, ***Copyright Royalty Tribunal and U.S. Copyright Office,*** hearings before the Subcommittee on Courts, Civil Liberties, and the Administration of Justice, July 11, Sept. 18, and Oct. 3, 1985 (Washington, DC: U.S. Government Printing Office, 1985).

[84]Robert Cassler, CRT, letter to OTA, Apr. 28, 1989, p. 4.

[85]Material for this section follows: Gary L. Urwin, "Paying the Piper: Performance Rights in Musical Record ings," ***Communications and the Law, vol. 5,*** Winter 1983, pp. 3-57, U.S. Congress, House Judiciary Committee, *Performance* ***Rights in Sound Recordings,*** hearings before the Subcommittee on Courts, Civil Liberties, and the Administration of Justice, Serial No. 83, Mar. 29 and 30, May 24 and 25, 1978, U.S. Congress, House Judiciary Committee, ***Performance Rights in Sound Recordings,*** hearings before the Subcommittee on Courts, Civil Liberties, and the Administration of Justice, Committee Print No. 15, June 1978, in particular pp. 100-105, 114-117, 254-259, 328-351,366-369,570-576, and 580-589.

[86]Siegal, "Lexicon Plus," op. cit., footnote 42, p. 20.

Box 6-B–Performing Rights Societies Distribution of Royalties to Members[1]

Both ASCAP and BMI have developed their own complex formulas for converting the amount of airplay from a particular station into an index of national play during the time surveyed.[2]

ASCAP

The American Society of Composers, Authors and Publishers (ASCAP) assigns each performance a value depending on what type of performance it is, i.e., a feature, background, etc. Each performance is then weighted according to the size and importance of the logged station, time of day of program, etc. to determine the total number of performance credits. Each quarter, the total performance credits for writers as a group, and for publishers as a group, are divided into the respective dollars of distributable revenue to yield the dollar value of a performance credit for each group. On payment, ASCAP issues a detailed statement showing the title of the work surveyed, the number of performance credits earned, and the media on which the performance appeared.

ASCAP has two systems of payment for its writers. The "current performance" plan distributes the writer's share of the money on the basis of his performance over the past four quarters. New writer members are initially paid on the "current performance" plan, with the option of switching to the "four-fund" basis after 3 full survey years. The "four-fund" system is a deferred payment plan based partly on current performances, but mostly on an average of performances over a period of 5 or 10 years.

Distribution of royalties to publishers is determined on a "current performance" basis only, in which the publisher is paid on an "on account" basis for the first three quarters, with adjustments being made in the fourth quarter.

BMI

Broadcast Music Inc. (BMI) affiliates are paid according to a published royalty payment schedule, which distinguishes between radio and television performances and between feature, theme, and background musical performances. A performance index is calculated for each performance, based on the number of times it is played on the radio and television stations, and the total revenue earned paid to the affiliates. BMI's royalty payment schedule allows for bonus credits based on the number of times one's works are played on the radio or television. Bonus credits are calculated on a song-by-song basis.

SESAC

The Society of European Stage Authors and Composers (SESAC) distribution system places less emphasis on actual surveys of performances on the air, and relies more heavily on the availability, diversity, growth, seniority, and commercial value of a publisher's catalog and the promotional effort of the publisher himself. SESAC pays its writers and publishers incentives of $240 each for any song recorded on a pop single and $100 each for any song recorded on a pop album.[3] Bonus credits are also awarded for song longevity, crossovers (songs appearing on more than one chart), and carryovers (those having earning power over a l-year period).

---

[1] "ASCAP: The Facts," op. cit., footnote 50; "BMI and the Broadcaster: Bringing Music to America," op. cit., footnote 47; Korman and Koenigsberg, op. cit., footnote 46, pp. 332-367; Shemel and Krasilovsky, op. cit., footnote 1; "The ASCAP Survey and Your Royalties," pamphlet published by ASCAP, 1986; and Dick Weissman, "Performing Rights Societies," op. cit., footnote 76, pp. 82-87.

[2] Weissman, "Performing Rights Societies," op. cit., footnote 76, p. 83.

[3] Shemel and Krasilovsky, op. cit., footnote 1, p. 185.

from broadcasters and other commercial users of their works. Performing rights in sound recordings has long been a hotly contested issue, with the first of many performance rights bills being introduced in 1925. A bill proposed in 1987 (H.R. 1805) would require broadcasters, radio stations, and background music services to pay fees for the right to play copyrighted sound recordings in commercial operations. The system proposed in H.R. 1805 (97th Congress) would be administered by the Copyright Royalty Tribunal, with the assis-

tance of organizations such as the American Federation of Musicians, which maintains records of recording sessions, and performing rights societies (ASCAP, BMI, SESAC), which track performances of copy-right owner's works. Half of the license fees would be distributed to the copyright owners of the sound recordings. The other half would be distributed to the performers on the recording, to be divided equally among all the participants.

Under the proposed system, users of sound recordings would have the option of paying license fees either on a blanket, or per-use prorated basis. The blanket license fee for radio and television stations would be based on the licensee's net receipts from advertising sponsors during the year; other transmitters of sound recordings would be subject to fees equal to 2 percent of their gross receipts from subscribers. The fee for radio stations with net receipts of $25,000 to $100,000 would be $250, $750 for net receipts of $100,000 to $200,000, and 1 percent of net advertising receipts for amounts over $200,000. Television stations with net receipts of $1 million to $4 million would be subject to license fees of $750, and $1,500 for receipts over $4 million. Commercial users, such as bars and restaurants, would pay $100 each year for each location in which sound recordings are used. Blanket licenses for all other users (with the exception of jukebox operators) would be established by the Copyright Royalty Tribunal within 1 year after the bill takes effect. Under the prorated per-use license, the CRT would determine the amount based on the extent of a licensee's use of recordings, with a maximum of 1 percent of gross receipts for radio and television broadcasters, and 2 percent for all other users.[87]

Arguments for and Against Performance Rights

Broadcasters argue that performance royalties would pose a financial burden so severe that stations would be forced to choose high-income programming and abandon or curtail certain kinds of programming, such as public service or classical programs, that do not generate a set amount of advertising revenue. They further argue that they compensate performers with free air time, thus promoting record sales and increasing the popularity of the artists. Furthermore, the broadcasters argue that a performance right would only exacerbate any injustices in the status quo by increasing the income only of those who are already working and not those who are struggling to find work.

Performers, on the other hand, argue that even if they do benefit from free airplay, broadcasters nevertheless derive a commercial benefit from the performance, and performers are entitled to be compensated for that use. They argue that broadcasters rarely announce the names of songs over the air, much less the names of the artists performing the songs. They further argue that by allowing broadcasters to use their music on the air, they risk overexposing their works. In this situation performers argue that they are being forced to compete with, and risk being driven out of work by, their own recorded performances. They argue that if it were not for the widespread availability of their recordings, they would have many more opportunities to perform their works in person. Broadcasters argue, on the other hand, that a

[87]For more information, see U.S. Congress, House Judiciary Committee, *Performance Rights in Sound Recordings*, *op. cit.*, footnote 90, U.S. Congress, House Judiciary Committee, *Performance Rights in Sound Recordings,* op. cit., footnote 90, pp. 100-105, 114-117, 254-259,328-351,366-369, 570-576, and 580-589.

performer cannot possibly perform in person as many times as a recording is played over the radio and that airplay promotes, rather than substitutes for, live performances.

The performers also argue that the many background singers or instrumentalists in the band, who are also part of the recording, are not given any credit on the air. They believe that a performance right would provide at least some compensation to these performers since the proposed royalty would distribute equal income to all performers regardless of their role in the recording.

ROYALTIES FROM HOME TAPING

Proposals for a Home-Taping Levy in the United States

Much of the debate on home copying has focused on imposing some type of levy scheme to compensate rights holders for the imputed losses they suffer from the widespread availability and convenience of recording technologies. The U.S. music community has repeatedly proposed that a levy be imposed on blank tapes as well as on the recording equipment itself to compensate artists and others for losses due to home taping. The income generated from this levy would be distributed as royalties among those involved in the creation of recordings – the composers, authors, musicians, artists, and record companies, as well as the producer and/or production company. One proposed blank-tape levy scheme and the proposed system for allocating the royalties generated by it, are discussed in detail in box 5-E.

Proponents of a levy scheme for the United States often point to the international scene, where levy schemes are already in use. They further argue that if American artists are to expect to be rightfully compensated for exported music products, then it is imperative that the United States impose some sort of reciprocal system so that other countries will be able to receive compensation for their works distributed in the United States. It is important to note, however, that international levy schemes will not have the same results in the United States that they have in European countries because of the political, legal, social, and commercial/market differences that exist within the various societies.[88]

International Perspectives on Tape Levies

At the time of this writing, no retrospective comparative or evaluative studies examining existing levy schemes were available to OTA. Several of the levy schemes have been put into effect fairly recently, and an adequate period of time has not yet elapsed to yield a comprehensive or definitive evaluation of their long-term effects. Some figures have been released as to how much revenue has been collected by the various countries, however, and available statistics are incorporated wherever appropriate (see also tables 5-1 and 5-2). Efforts continue abroad to implement home-copying fees for audio and video copying.[89] The following sections spotlight some of the systems that have been put into place.

France

Under French copyright law, right holders (authors, performers, and producers) are granted the right to receive fair compensation

[88] Mike Grubbs, Tandy Electronics, letter to OTA, Apr. 27, 1989.

[89] For example, an amendment t. the Netherland's copyright law has been proposed to introduce a blank-tape fee. (*Intellectual Property in Business Briefing, vol.* 1, Issue 4, May 1989, pp. 3-4.)

Box 6-C–How Performance Royalties Are Distributed in Other Countries[1]

England – England guarantees the right of public performance for sound recordings to the producers of the work, but not to the performers appearing on the recording. Performers are, however, protected by criminal laws, which impose sanctions on those who violate the performer's right to public performance. Producers and performers assign their performance rights to Phonographic Performance Limited (PPL), which then licenses this right to users. PPL negotiates sound recording licensing fees with broadcasters and other users of copyrighted music.

Under British law, performers from other countries have no intellectual property rights in the public performance of their works, and thus, England does not make payments for the public performances of U.S. records either, although some companies do pay their American affiliates through contract.

Denmark – Like most European countries, Denmark does not consider performing rights for sound recordings a direct copyright, but rather a "neighboring" or "related" right. As such, the performance right is granted for a term of 25 years, rather than for the full term of copyright, which is life plus 50 years.

Denmark has strict rules regarding the eligibility requirements of performers and producers making claims to a share of the performance royalties. To receive renumeration for the public performance of their copyrighted works, copyright owners must become members of GRAMEX, the Danish collecting society, which represents the interests of the copyright holders in licensing negotiations with broadcasters and other users of copyrighted music.

Revenues from the royalty scheme are divided equally between the performer and the producer. Performers, however, are responsible for paying two-thirds of the administrative costs, since the calculation of performers' royalties requires more time and effort than that of producers' royalties. Payments to producers are transferred to the national recording-industry group, which then makes payments to individual labels based on record sales. Foreign producers receive payments either through Danish subsidiaries or affiliates.

West Germany – Like Denmark, West Germany treats the performance right as a secondary right and not as an exclusive right, thereby limiting protection to 25 years rather than the full term of copyright. But unlike other countries, West Germany recognizes the performer as the primary copyright holder of a sound recording, although the producer is eligible to share in the proceeds.

West Germany's system of collecting and distributing performance royalties is similar to that of most countries in that the copyright owner assigns his rights to a performance right society, which in turn, licenses this right to broadcasters and other users of copy-righted music. But whereas most other countries calculate payments on the basis of air play or play time, West Germany does not. This eliminates the high administrative costs associated with having to determine airplay. This type of system, however, does have implications for the distribution of royalties among foreign nationals. Because most countries do not determine payments based on the author's recording-related earnings as in West Germany, it is hard to compare systems.

[1]Material for this sect ion is taken from: U.S. Congress, House Judiciary Committee, ***Performance Rights in Sound Record-~ngs,*** op. cit., footnote 90, pp. 178-186, 195-202, 202-207.

for the private reproduction of their copyrighted recordings.[90] In December 1986 the French Government imposed a levy on both audiotapes and videotapes. The levy is set at 1.50 FF (25 cents) per hour playing time for audiotapes and 2.25 FF (37 cents) per hour playing time for videotapes. Seventy-five percent of income is distributed to the individual right owners; the remaining 25 percent must be used for the promotion of audio/

[1]Material for this section was taken from: Yvonne Burckhardt, "Legislation On Private Copying in Europe and Its Implementation," lecture given by the General Secretary of FIM in Zurich, June, 1988; and Yvonne Burckhardt, "'New' Right of Performers" (Zurich, Switzerland: International Federation of Musicians, March 1987).

Box 6-D– Copyright Clearance Center[1]

One example of a U.S. organization that collects royalties for private copies is the Copyright Clearance Center (CCC). Although the CCC (to date) has focused on distributing income from licenses for photocopying rights, representatives feel that the CCC could also be adapted to the distribution of income from a home-copying levy.[2]

The Copyright Act of 1976 grants copyright owners the exclusive right to distribute and reproduce their published works; thus, the law requires that users of copyrighted materials first obtain permission from the copyright owners before making copies beyond the "fair use" principle, subject to exemptions for reproductions by libraries and archives.[3] The task of obtaining permission beforehand, however, can be timeconsuming and inefficient on an individual basis. The CCC estimates that over 800 million pages of photocopies are made from copyrighted works each year by major corporations, and that most U.S. corporations rarely, if ever, obtain permission for their general photocopying needs.[4]

The CCC was established as a nonprofit agency in 1977 by publishers, authors, and users of photocopies in response to the needs of businesses requiring the immediate use of information. It was designed to accelerate the process of obtaining copyright permission while compensating copy-right owners for copies of their works.

The CCC operates two services: 1) the Transactional Reporting Service, where each organization keeps track of how many copies are made of each work, and pays a license fee based on the number of transactions; and 2) the Annual Authorizations Service, a blanket license in which the company makes a single payment for authorization to make limitless copies of the works covered by the CCC.

The Transactional Reporting Service is designed to serve the needs of smaller organizations that only occasionally make copies of copyrighted material. Users of this service are required to record the number of copies made of specific works. Because users must record and report all copies made within the year, there are enormous administrative costs both in time and in effort.

The Annual Authorizations Service was established in 1983 in response to the needs of major U.S. corporations that reproduce substantial amounts of copyrighted material. The list of participants in this service has grown to 75 and includes several large corporations. A license obtained through this service permits organizations to make as many copies of participating publications as needed without the administrative burden of having to record each transaction. Projected annual use is calculated from the surveys by using statistical models. This service is currently the major source of payments to the CCC.

The licenses are granted for 1 year and are renewable for a second. The cost of the license is based on data from copying surveys conducted at corporate sites. According to Eamon T. Fennessey (President, CCC) the cost of these licenses can range from five to six figures.[5] Corporations are limited to copying articles, journals, and parts of books; the copying of an entire book is prohibited. Licenses are granted for copying publications that are registered with the service and apply only to copies made for internal use.

Over 900,000 publications of approximately 6,200 publishers are currently registered with the CCC.[6] By joining, a publisher designates the CCC to act as agent for those works that the publisher registers. No royalty can be collected for the copying of a work not registered. The CCC is responsible for licensing a nonexclusive right to corporations, handling license renewals, and processing publication additions, deletions, and fee changes. The fees are stated by the publisher, who receives reports on billings and collections as well as on each participating corporation's projected use of the publisher's works.

One stated goal of the CCC is to increase corporations' awareness of copyright protection. The CCC is a member of the International Federation of Reproduction Rights Organizations and shares rights agreements with international organizations such as the Copyright Licensing Agency in England, Centre Francais du Copyright in France, and Copyright Agency Ltd. in Australia. It also has agreements with West Germany and Norway.

Continued on next page

The CCC is currently considering collecting royalties for the copying of computer software, the copying of textual and database material by any type of technology via electronic access, and the collecting of royalties from universities and government bodies.

'Material for this section is taken from: "Income from Copying, " and "Publishers' Executive Summary: Royalty Payments Owed Under U.S. Law to Publishers World-Wide for Photocopying in U.S.A.)" pamphlets published by the Copyright Clearance Center, and Edwin McDowell, "Royalties from Photocopying Grow, " New York *Times.* June 13, 1988.

2CCC representative, personal communication, Apr. 28, 1989.

3Title 17, U.S. Code, Section 108.

4"publishers' Executive Summary: Royalty Payments Owed Under U.S. Law to Publishers WorldWide for Photocopying in the U. S.A.," op. cit., footnote 1 above.

5McDowell, Op. Cit., footnote 1.

WCC representative, personal communication, April 28, 1989.

audiovisual productions and live performances. The proceeds of this levy are paid to a collecting society to be distributed among the various copyright holders: authors receive one-half of the proceeds from the audiotape levy, with the performers and producers sharing the remaining half equally between them. Proceeds from the videotape levy are distributed equally to all three parties.

Revenue from France's blank-tape levy boosted the gross income of the Societe des Auteurs, Compositeurs, et Editeurs de Musique (SACEM), the French authors' society, by 9.5 percent to 1.84 billion francs ($305.9 million) in 1987.[91] Of this amount, 1.23 billion francs ($203.6 million) were collected in performance income, an increase of 7.3 percent over 1986, and 615 million francs ($101.8 million) in mechanical income, up 14.3 percent from the previous year. Revenue from the blank-tape levy itself amounted to 68.2 million francs ($1 1.28 million) of the mechanical rights income. Of the 1.84 billion francs collected, 1.3 billion francs ($215 million) were distributed among approximately 50,000 authors, composers, and publishers for the performance of about 450,000 works.

In 1988, France collected 400,860,313 francs ($63,377,125) from its blank-tape levy. Of this amount, 103,185,757 ($16,313,954) came from its audiotape levy.[92]

The recent addition of the blank-tape levy was partially offset by the reduction of the value-added taxes (VAT) on both prerecorded and blank videocassettes and audiotapes.[93] The recording industry believes that this reduction will result in less revenue for the copyright holders, which runs counter to the aim behind the blank-tape levy. They feel that instead of focusing on the producers of blank

---

91The following is taken from Mike Hennessey, "Tape Levy Helps Lift SACEM Income," *Billboard,* vol.100, *No.* 30, July 23, 1988, p. 60.

92J. L. Tournier, President, SACEM/SDRM, letter to OTA, May 25, 1989 (enclosures 1-3: IFPI tables).

93Material for this section was taken from Philippe Crocq, "French To Cut VAT Rates for Cassettes: Move Affects prerecorded Videos, Blank Audiotapes, " *Billboard, vol.* 100, No. 43, Oct. 22, 1988, p. 91; and Philippe Crocq, "French VAT Cut on Prerecorded Vial: Not All It Was Cracked Up to Be," *Billboard,* vol. 100, No. 49, Dec. 3, 1988, p. 53.

Box 5-E–Details of Proposed Blank-Tap Levy in S.1739

A bill was proposed in the 99th Congress, S. 1739,[1] to amend Title 17 of the U.S. Code with respect to home audio recording and audio recording devices. If enacted, the Home Audio Recording Act would legalize the home taping of copyrighted music in exchange for a modest levy on both the recording equipment and blank tapes. The one-time levy would be imposed on equipment and blank-tape manufacturers and importers and would be distributed through the Copyright Royalty Tribunal to the appropriate copyright holders of the recorded materials.

Determination of the Royalty Rate: The Home Audio Recording Act would require manufacturers and importers of recording equipment and blank audiotapes to pay a one-time levy per unit on the first sale or distribution of their product in the United States. The levy for audio recording devices would be set at 5 percent of the price for the first domestic sale, 20 percent of the price charged for dual audio recording devices, and 1 cent per minute of the maximum playing time or a fraction thereof in the case of blank media.

These fees would be subject to adjustment every 5 years, contingent on many different factors, among them, the following

1. the value to the individual of the right to reproduce copyrighted works;
2. the compensation that would have been received by the copyright holders if home copying were not possible;
3. the benefits derived by the consumers, manufacturers, and importers from the use and distribution of these audio-recording devices or media;
4. the projected impact on both copyright owners and consumers, as well as the impact on the structure and financial condition of the various industries involved; and
5. the relative roles of copyright owners, importers, and manufacturers with respect to creative and technological contribution to-the development-of sound recordings and musical works.

Other factors to be considered would include the objective of maximizing the creation of new sound recordings and musical works, reasonable estimates of the amount of audio recording devices or media not used for infringing purposes, and the development of new technologies for making audio recordings for private use.

Because these factors would be constantly changing, it might be necessary to distinguish among different kinds of audio recording devices or audio recording media and to establish different levies to ensure fair compensation to the copy-right holders.

Collection of the Royalties: The royalties from the levy would be collected by the Register of Copy-rights, to be deposited into the Treasury of the United States after reasonable administrative costs had been deducted. This pool of money would then be invested in interest-bearing U.S. securities, ultimately to be turned over to the Copyright Royalty Tribunal for distribution.

Administration of the Royalty System: The monies collected from the compulsory license fee would be distributed every year. The Copyright Tribunal would specify a 30-day period in which any person entitled to receive part of the royalty would file a statement of account for the previous year. To be eligible to receive a share of the royalty fees, the claimant would have to be the owner of the copyright of a musical work or sound recording that was included in either radio or television transmissions, or distributed to the public in the form of phonorecords or copies.

The claimants would then have to negotiate in good faith among themselves in an effort to reach a voluntary agreement on the distribution of the royalties. A number of options could be exercised in the negotiations—claimants might agree to the proportionate division of compulsory licensing fees among themselves, they might consolidate their claims and file them jointly or as a single claim, or they might appoint a common agent to receive payment on their behalf.

The Tribunal would then have to determine whether a controversy existed among the claimants over the distribution of the royalties. If no such controversy appeared to exist, the Tribunal would distribute all royalties, less administrative costs, to the entitled copyright holders, or to their designated agents. If a controversy did exist, the Tribunal would conduct an evidentiary proceeding to determine how the royalties should be distributed. All involved parties would be given the opportunity to present their views to the Tribunal. In the meantime, the Tribunal would be allowed to distribute all fees that were not in contention, as long as it withheld an amount sufficient to satisfy all claims still in dispute.

Continued on next page

The Tribunal would be responsible only for the first phase of royalty distribution, to the owners of the two copyrights encompassed in every recorded tune: the musical composition and the sound recording. The monies collected from the implementation of this bill would then be shared among all others responsible for the creation and production of a musical work on the basis of negotiated contractual agreements.

Proposal of the Music Community: The music community, consisting of record companies, songwriters, music publishers, and performers developed a model for the sharing and distribution of the home-taping royalties generated by this bill, which they believed would be fair and reasonable to all parties involved. They argued that their plan would ensure just compensation to those whose works were being reproduced without authorization and would provide incentives for the creation and dissemination of new musical works. To accomplish this goal, they proposed that a Musical Arts Endowment be created for the benefit of aspiring songwriters, musicians, and vocalists whose works have not yet been published or recorded. They also proposed that Creative Incentive Grants be awarded to those whose recorded works had not yet achieved widespread popularity.

Distribution of the Royalties: The first step in the proposed distribution system, after the royalties had been turned over to the Copyright Royalty Tribunal, would be to allocate 2 percent of the royalty pool to the Musical Arts Endowment to encourage and nurture new songwriters and recording artists, and to promote the development of new and experimental types of music. The money would be divided equally between The Songwriters Guild Foundation (for lyricists and composers) and the National Endowment for the Arts (for aspiring vocalists and musicians).

The remaining royalties would then be distributed among both copyright holders of the musical composition and sound recording and the union organizations representing musicians and vocalists. First, 2 percent of the royalties would be designated for funds to support musicians and vocalists (funds now in existence or to be established by the American Federation of Musicians (AFM) and the American Federation of Television and Radio Artists (AFTRA). Of that 2 percent, 1 3/4 would be assigned to AFM funds and 1/4 assigned to AFTRA funds.

The remaining royalties would be divided between the two copyright pools. Twenty-three percent of the royalties would be allotted to the Musical Composition Pool to be distributed among the lyricists, composers, and publishers, and 75 percent of the royalties would be allotted to the Sound Recording Pool to be distributed among the recording artists and record companies.

Each of these copyright pools would be further divided into separate funds–the airplay and record-sales pools. An annual survey would be conducted to determine what proportion of the royalties would be used to compensate copy-right holders for their losses based on the amount of airplay a musical recording had received and for the sales that the recording had enjoyed. The royalties would be divided between these two funds based on the percentages dictated by the survey.

The airplay funds in both copyright pools would further be weighted to reflect the size of the audience. Either ASCAP or BMI would be able to provide the necessary information to achieve the appropriate weights. Both societies have developed their own formulas for distributing royalties to the appropriate copyright holders for the public performances of live music and music performed over the radio or television.

The weighting of the record sales pool would take into account the different economic impact that home taping would have if it displaced the sale of a front-line album as compared with the sale of a budget-line album. To account for the differential in loss, weighting would be done based on the price category of the phonorecord. The necessary pricing information could be obtained from record companies.

Of these royalties, 80 percent would be based on direct proportion and 20 percent on Creative Incentive Grants. These grants would be awarded to those most in need of additional incentives. Creative Incentive Grants would encourage the creation and dissemination of new musical works and would benefit creators, record companies, and music publishers. Eligibility for a Creative Incentive Grant would be determined on the basis of the total previous payments made on a proportional basis from the royalty pools for each musical recording. Those receiving the lowest percentage would be eligible for grants.

---

[1]See U.S. Congress, Senate Judiciary Committee, ***Home Audio Recording Acts*** hearings before the Committee on the Judiciary and its Subcommittee on Patents, Copyrights, and Trademarks, Serial No. J-99-69, Oct. 30,1985, Mar. 25 and Aug. 4, 1986.

tapes, the finance ministry should target the audio and video carriers. They suggest that the VAT rate be cut on records and prerecorded tapes, from 18 to 7 percent, so that the recording industry can continue its economic growth. It is estimated, however, that a cut in the VAT rate on records and prerecorded tapes would cost the government $315 million a year in lost revenue.[94]

Officials from the French IFPI (International Federation of Phonographic Industries) group, Syndicat National de l'Edition Phonographique (SNEP), also fear that tax reductions for blank audiotapes could further harm the recording industry, although they believe the reduction for videotapes may help spur sales of the new CD video format. A similar cut in VAT for recorded and prerecorded tapes in December of 1987 has been generally perceived as having helped revive the commercial record industry.[95]

Australia[96]

Australia is the first English-speaking country to approve a blank-tape levy. After a decade of lobbying by the record industry, the Australian Government imposed a blank-tape levy on audiotapes and legalized home taping of audio recordings. The Australian Government will not receive benefits from the levy, nor will it be responsible for its administration. A nonprofit agency monitored by the Australian Contemporary Music Development Co. has been established and a board of directors, chosen from the entertainment industry, has been appointed to administer collection and distribution of the levy. The initial funding was provided by the Department of Employment, Education, and Training, and it is expected that 15 percent of the revenues generated from the blank-tape royalty will be used to fund the program.

Royalties will be distributed on the basis of already existing systems designed to calculate the amount of sales and airplay a particular recording enjoys. The amount of the levy has not yet been determined, but it is expected to be in the range of 20 to 50 Australian cents for each 60-minute cassette sold. Special exceptions will be made for groups and individuals who will not be using blank tapes to copy copyrighted music — groups such as schools and institutes for the blind. The Australian Record Industry Association estimates that the levy will raise millions of dollars, but much less than the 30 million Australian dollars per year that the recording industry claims to lose because of home taping.[97] Most of the royalties will be distributed to Australian artists, although royalties will also be distributed to those countries that operate under the same type of royalty system, including West Germany and France. The United States and England, although major suppliers of foreign music, will not be eligible to receive any revenues since they do not have reciprocal arrangements with Australia.

Belgium[98]

In Belgium, a proposed levy on blank tapes would be based on 8 percent of the retail price of a blank tape. Revenues generated from this levy would be divided into equal parts, with

---

[94]Crocq, "French To Cut VAT Rates for Cassettes: Move Affects Prerecorded Videos, Blank Audiotapes," op. cit., footnote 93, p. 91.

[95]Ibid.

[96]Material for this section is taken from Glenn A. Baker, "Australian Gov't Approves Blank-Tape Royalty Plan," *Billboard*, vol. 100, No. 24, June 11, 19S8, p. 76; and Debbie Krueger, "Oz Imposes a Blank-Tape Levy Giving Royalties to Disk *Artists*," *Variety*, vol. 331, No. *6*, p. 84, June 1, 1988.

[97]Kruger, op. cit., footnote 96, p. 84.

[98]Material for this section is taken from: Marc Maes, "Belgium Eyes Blank Tape Levy," *Billboard*, vol. *IQ* No. *44*, Oct. *29*, 1988, *pp. 86,88.*

one part being distributed among the authors, artists, and manufacturers; and the other part going to the three language communities (Flemish, French, and German), who would use the money to support artists and cultural institutions in each community. The proposal also calls for an extension of the copyright period on author's works from 50 to 70 years, thereby enabling the three communities to benefit from the additional 20 years.

Belgramex, the Belgium federation of artists and manufacturers, has welcomed the proposals, but thinks that the levy should be based on the actual playing time of the tape, rather than the retail price. It would also like to see a levy on recording equipment. Belgramex believes that the revenues should be used to compensate those that are harmed (the manufacturers, artists, and authors) rather than distributed to the three language communities. It will be some time before new legislation is drafted, if at all.

United Kingdom

In England, the new Copyright, Patent, and Design Law of 1988 does not change the legality of home taping of copyrighted music, considered an infringement of copyright law.[99] Nor does the law impose a levy or tax on blank audiotape and videotape to compensate copyright owners for harms from home taping.[100] The British Government's decision not to support a blank-tape levy came 2 years after it had, in a "white paper," determined the imposition of a blank-tape levy to be the "best solution to the home-taping problem" and had promised to enact legislation accordingly.[101]

The U.K. Trade and Industry Minister, Kenneth Clarke, had argued that such a levy would be both "wrong and indefensible, "lop with the greatest weight falling unfairly on consumers, especially on groups such as the visually handicapped. He further argued that the inequities placed on the consumer would far outweigh any benefits resulting from the levy, with those that are already financially well-off receiving most of the benefits. In addition, he argued that administrative costs would be high and the collection and distribution of the proceeds would require a new bureaucracy.

Support for a levy was voiced by such groups as the British Music Copyright Reform Group (MCRG), the British record industry, and even the consumers themselves. The results of a U.K. opinion poll, announced on June 20, 1988 by the Music Copyright Reform Group, indicated that 60 percent of consumers regarded a 10-pence (18 cents) levy on blank tape as the best solution to the home-taping problem, 15 percent supported a spoiler device in prerecorded material, 2 percent favored prosecuting home tapers, and 23 percent had no opinion. The study also indicated that the more actively consumers are engaged in home taping, the more likely they are to support the royalty solution, which would legitimize home taping.[103]

Some estimate that a home-taping royalty would produce the equivalent of $12.25 million a year.[104] According to one estimate, the

[99]The following is taken from: Nick Robertshaw, "U.K. Gov't Rejects Home-Tape Levy," *Billboard*, vol. 100, No. 20, pp. 3, 84; and "U.K. Kills Tape Tax," *TV Digest*, vol. 27, No. 44, Nov. 2, 1987, p. 15.

[100]See ch. 3, pp. 35-38 for a more detailed description of the new copyright law.

[101]Robertshaw, "U.K. Gov't Rejects Home-Tape Levy," op. cit., footnote 99, p. 3.

[102]Ibid.

[103]Mike Hennessey, "U.K. Poll Shows Consumers Favor Blank Tape Levy," *Billboard*, vol. 100, No. 27, July 2, 1988, p. 84.

[104]U.K. Group Urges Home Taping Levy: Musicians Join Major Drive to Win Over Gov't," *Billboard*, vol. 100, No. 10, Mar. 5, 1988, p. 4.

recording industry suffers losses of approximately $1.3 billion due to home taping, and 80 million of the blank tapes sold in 1987 were used to copy copyrighted music.[105] The MCRG estimates that 2.5 times as much music is being copied as is being sold.[106]

Yet despite imputed home-taping losses, statistics released in 1988 by the British Phonographic Industry show that the recording industry is enjoying substantial growth and that the LP business is actually enjoying a resurgence. The sales value of shipments of U.K. recordings rose 23 percent to $1.04 billion overall, with album sales rising 27 percent to $887.7 million, CD sales up 75 percent to $238.9 million, and cassette sales rising 24 percent to $365.7 million.[107]

Hopes were revived for a levy on May 24, 1988, when members of a parliamentary committee voted 12-10 in favor of an amendment empowering the government to introduce the controversial levy.[108] However, the House of Commons approved a government amendment rejecting the levy provision, on June 25, by a vote of 134 to 37.[109] The MCRG then took its fight for a levy to the European Economic Community (EEC), with the aim of lobbying the EEC to adopt the levysolution.110 But the EEC, in a "green paper," decided instead that each government should follow its own views on the issue.111

Canada[112]

The Canadian Government recently replaced its 1924 Copyright Act with a new act that grants artists the right to control their works and extends copyright protection to computer programs as well.113 The Copyright Act of 1924 contained provisions for a "compulsory" license, whereby recording companies could automatically obtain the right to record any song made and sold in Canada simply by paying a statutory royalty of 2 cents per playing surface.

---

[105] Nick Robertshaw, quoting Simon Coombs, Conservative Parliament Member, "U.K. Gov't Rejects Home-Tape Levy," op. cit., footnote 99, p. 3.

[106] "U.K. Group Urges Home Taping Levy: Musicians Join Major Drive to Win Over Gov't," *Billboard*, vol. 100, No. IO, March 5,1988, p. 4.

[107] Peter Jones, "U.K. Sales Belie Dire Predictions: Despite Problems, Music Biz Shows Growth," *Billboard*, vol. 100, No. 22, May 28, 1988, pp. 1,83.

[108] Nick Robertshaw, "Hopes Revived for U.K. Tape Levy," *Billboard*, vol. 100, No. 24, June 11, 1988, p. 76.

[109] Mike Hennessy, "U.K. Commons Rejects Tape Levy: IFPI Decries 'Moral Injustice'," *Billboard*, vol. 100, No. 31, Aug. 6, 1988, p. 3.

[110] James Coopman, "Two Setbacks Hit U.K. Struggle for Blank Tape Levies," *Variety, vol. 332, No. 5,* Aug. 24, 1988, p. 104.

[111] Commission of the European Communities, Green *Paper on Copyright and the Challenge of Technology — Copyright Issues Requiring Immediate Action,* COM (88) 172 final, Brussels, June 7, 1988.

[112] Material for this section is incorporated from: Earl Green, "Canada at Long Last is Replacing Copyright Act around since 1924," *Variety, vol. 331, No. 8,* June 15, 1988, p. 31; Kirk LaPointe, "Canada Passes Copyright Reforms," *Billboard*, vol. 100, No. 24, June 11, 1988, pp. 1, 78; Kirk LaPointe, "Commons: 'No More Delay' – Reform Bill Returns to Senate," *Billboard*, vol. 100, No. 22, May 28,1988, p. 75; Kirk LaPointe, "Copyright Act Opens Door for New Mechanical Rates," *Billboard,* vol. 100, No. 26, June 25, 1988, p. 71; Kirk LaPointe, "New Elections Kill Broadcast Plan: Deal to Scrap Tariffs on Hold," *Billboard, vol.* 100, No. 42, Oct. 15, 1988, p. 72; Kirk LaPointe, "Senate Blasted for Copyright Stand: CRIA Head Decries 'Cultural Assassins'," *Billboard,* vol. 100, No. 21, May 21, 1988, p. 66; Kirk LaPointe, "Senate Digs In: Showdown May Loom on Copyright Bill," *Billboard*, vol. 100, No. 12 Mar. 19, 1988, p. 84; Kirk LaPointe, "Senate: 'No Deal on Copyright Bill' –Reform Advocates Suffer Major Setback," *Billboard*, vol. 100, No, 20, May 14, 1988, p. 70; Kirk LaPointe, "Senate Softens on Copyright Amendment Issue," *Billboard, vol. 100, No. 23,* June 4, 1988, p. 58; Chris Morris, "Canada Nears Mechanical Rates," *Billboard, vol.* 100, No. 30, July 23, 1988, pp. 1, 76; OTA staff interview with and materials received from the Canadian Musical Reproduction Rights Agency Ltd.

[113] See ch. 3, pp. 38-39 for a detailed description of the new copyright law.

The new Copyright Act gives publishers the right to grant a license on terms and at a rate stipulated by them, or to refuse to issue a mechanical license. The new act also provides a system to help writers and publishers negotiate and collect copyright fees. The 2-cent-a-song compulsory license has been abolished, giving creators and record companies the opportunity to negotiate new rates that are in line with rates in other countries.[114]

In addition, the new Copyright Act provides harsher penalties for copyright infringement. The previous maximum penalty was a $200 fine. It is now set at $25,000 and 6 months in jail on summary indictment and $1,000,000 and 5 years in jail upon conviction on indictment.

The second installment of copyright legislation is expected to deal with the home copying of records, videotapes, and computer programs, the distribution of royalties from video rentals, cable fees for retransmission, and copyright protection for computer chips.

The recording industry, arguing that home taping has deprived them of millions of dollars in revenues, has fought long and hard for revisions to the old Copyright Act. The results of a recent consumer survey commissioned by the Music Copyright Action Group, which includes the country's leading trade organizations, indicate that home-taping losses to the recording industry may exceed $600 million (Canadian) or 68 million in unit album sdes.115 previous studies estimated losses between $50 million and $100 million.116 In this first-ever consumer survey by the music business, approximately 60 questions were asked of about 500 people in telephone conversations that averaged about 14 minutes. The findings revealed not only high incidence of home taping (63 percent of those surveyed in the 15 to 54 age group had made a home tape within the previous year), but also strong support for compensation to the copyright owner for income lost due to home taping, with the heaviest tapers favoring a blank-tape levy.

Despite these estimated losses, the Canadian recording industry has enjoyed its fifth straight year of revenue growth. The results of a Statistics Canada study[117] show that in the year ending March 1987, both Canadian imports and exports had increased substantially and the industry experienced a 10.5 percent increase in revenues, despite a decline in the market share of albums, from 78 to 31 percent, with a slight rise in the market share for cassettes. CD sales tripled from 4 to **12 percent**, providing the major boost in **revenues.**

Other Countries[118]

Hungary. – Hungary imposed **a** levy on blank tapes in 1983 that amounts to 8 percent of the selling price of a blank tape. Revenues from the levy system are distributed among the copyright holders of recordings, with 50 percent going to the authors, 30 percent to the performers, and 20 percent going to the producers of audio recordings. In the case of video recordings, 70 percent is distributed to the authors and 30 percent to the performers. The performers' shares are not individually

---

[114] Aftermonthsofnegotiation,thenewmechanical rates (in effect until October 1990) were fixed at 5.25 Canadian cents per track for all records sold after Oct. 1, 1988, regardless of when the record was released. Extended works of more than 5 minutes will receive 1.05 cents for each additional minute or fraction thereof.

[115] Canadian Independent Record production Association (CIRPA), *A Study On Home Taping,* prepared on behalf of The Music Copyright Action Group, ISBN 0-921777-02-7, 1987.

[116] Kirk LaPointe, "Canada Study: Copying Is Rampant," *Billboard*, vol. 100, No. 12, Mar. *19, 1988,* pp. 1, 106.

[117] Kirk LaPointe, "Stats Canada Surveys 8&87 Music Scene: Report Reveals Overall Strengthening of Industry, " *Billboard*, vol. 100, No. 31, July 30, 1988, p. 62.

[118] Material for this section taken from: Yvonne Burckhardt, "Legislation on private Copying in Europe and Its Implementation, ' and Yvonne Burckhardt, "'New' Rights of Performers, " op. cit., footnote 90.

distributed, but rather used for social purposes.[119] The Bureau for the Protection of Authors' Rights collects the revenues from the levy and then transfers the amount due performers to the Association of Hungarian Art Workers' Unions, which distributes the funds. The purpose of the Association is to provide support to the profession, to performers of all ages, and to sponsor study trips, scholarships, festivals, etc.

Iceland.[120] – Iceland introduced a levy on blank audiotapes and videotapes, as well as on recording equipment in 1984. The levy was set at 10 Icelandic Kronen (19 cents) for audiotapes and 30 Icelandic Kronen (57 cents) for videotapes. The recording equipment is levied at four percent of the import price or the manufacturing price. Eighty-five percent of the total revenue collected is distributed; the remaining 15 percent is put into a cultural fund supervised by the Ministry of Education. The proceeds from the audiotape levy are collected by one body, and distributed to the performing artists and producers (46 percent), music authors (46 percent), and lyric writers (8 percent). The performers' share is deposited into a fund for the promotion of the profession, particularly for music schools.[121]

West Germany. – West Germany has a levy on blank tapes in addition to one on recording equipment. Erich Schulze, President and General Manager of Gesellschaft fur musikalische Auffuhrungs - und mechanische Vervielfaltigungsrechte (GEMA), has commented that the introduction of a blank-tape levy has not had a negative impact on the competitive situation of West German or foreign tape manufacturers. On the contrary, he asserts that product sales have risen steadily, while retail prices have actually declined considerably.[122]

The levy is set at 2.50 Deutsche marks ($1.35) for audio recording equipment, 18 DM ($9.78) for video equipment, .12 DM (6 cents) per hour of recording time for audiocassettes, and .17 DM (9 cents) per hour of recording time for videocassettes. Revenues from this system, which took effect July 1, 1985, are distributed among the various collection societies for music authors (42 percent), performers and producers (42 percent), and lyric authors (16 percent). Gesellschaft zur Verwertung von Leistungsschutzrethten (GVL), the performance rights society, distributes the proceeds according to the same scheme used for the distribution of revenues from the broadcasting of commercial records, with the performers receiving 64 percent of the share and the producers receiving the remaining 36 percent.

In 1985, West Germany collected 50 million DM ($27,174,000),16 million DM ($8,695,000) of it in the audio field and 34 million DM ($18,000,000) of it in the video field. Of this amount, the performing rights society received 3.9 million DM ($2.1 million) from its audio recording equipment levy, and 2.4 million DM ($1.3 million) from its blank-audiotape levy. In addition, GVL received 4.5 million DM ($2.4 million) from its video equipment levy, and 2.1 million DM ($1.1 million) from its blank-videotape levy. Of this amount, the performers received 64 percent and the producers 36 percent, which resulted in 8.2 million DM ($4.4 million) being distributed among the performers.[123]

---

[119] J. L. Tournier, op. cit., footnote 92, table 2.

[120] The following section is taken from J.L. Tournier, op. cit., footnote 92, table 2.

[121] Yvonne Burckhardt, "Legislation on Private Copying in Europe and Its Implementation," op. cit., footnote 90, p. 10.

[122] Erich Schulze, president and General Manager, GEMA, letter to OTA, June 7, 1989.

[123] Yvonne Burckhardt, "Legislation on private Copying in Europe and Its Implementation" op. cit., footnote 90, pp. 5-6.

In 1987, West Germany collected 93,500,000 DM ($50,080,343) in total blank-tape revenues; 28,600,000 DM ($15,318,693) in the audio field.[124]

Sweden. – Sweden, unlike the other countries discussed above, has introduced a tax system on blank tapes, in which the revenues collected from the tax go to the government, which decides what to do with the funds. The rate is set at 1.50 SKr (23 cents) per audiotape, and 15.00 Skr ($2.35) per Videotape.[125] Two-thirds of the revenues collected are used for unspecified purposes; 80 percent of the remaining one-third is put into a cultural fund and the remaining 20 percent divided among the author (40 percent), performer (30 percent) and the producer (30 percent). The revenues due the performer are transferred to the performers' collection society (SAMI), which deducts half for administration costs and divides the other half according to the same scheme used for distributing revenues from the broadcasting of records. This leaves the performer with a relatively small share of the revenues from the tape tax.

In 1986, the performers' collecting society, SAMI collected 900,000 SKr ($154,800) from its tape tax, half of which was used for collective purposes and the rest distributed individually to performers.[126] From June 1987 to June 1988, Sweden collected 130,000)000 SKr ($20,300,000) from its blank-tape tax. Of this amount, 3,000,000 SKr ($470,000) was distributed to rights holders in the music field, and 848,000 SKr ($132,700) to producers of phonograms. The state retained 127,000,000 SKr (19)830,000) as fiscal revenue.[127] The International Federation of Phonographic Industries notes that the amount distributed to right owners has remained unchanged for the past three years, while the total revenue collected has increased substantially.[128]

Tables 5-1,5-2, and 5-3 summarize the legislation and implementation of levies and taxes on private copying in Australia, Austria, Finland, France, West Germany, Hungary, Iceland, Norway, Portugal, Spain, and Sweden.

---

124 J. L. Tournier, op. cit., footnote 92, table 2.

125 Ibid., table 3.

126 Yvonne Burckhardt, "Legislation On Private Copying In Europe and Its Implementation," op. cit., footnote 90, P. 12.

127 J. L, Tounier, op. cit., footnote 92, table 3.

128 Ibid.

Table 5-1.–Private Copying Royalties - Legislation and Implementation

Country	Date of law	Basis of royalty	Rate of royalty	Beneficiaries
Australia	Copyright Amendment Act 1989	Blank audio tape:	Not yet decided	Producers of phonograms Authors
Austria	Law No. 321 of 2 July 1980	Blank audio tape: Blank video tape:	AS 1.60/h (USD 0.12) Special rate:AS 2.40/h (USD 0.18), when no contract AS 2.56/h (USD 0.19) Special rate:AS 3.85/h (USD 0.29), when no contract.	Producers audio/video Authors Performers
Finland	Law No. 442 of 8 June 1984	Blank audio tape: Blank video tape:	FM 1.8/h (USD 0.41) FM 0.03/min FM 3.6/h (USD 0.82) FM 0.06/min	Authors Performers Producers audio/video
France	Law No. 85-660 of 3 July 1985	Blank audio tape: Blank video tape:	FF 1.5/h (USD 0.24) FF 2.25/h (USD 0.36)	Authors Performers Producers audio/video
Germany (Federal Republic)	1965 Copyright Law, as amended 23 May 1985	Blank audio tape: Blank video tape: Audio hardware: Video hardware	DM 0.12/h (USD 0.06) DM 0.17/h (USD 0.09) DM 2.50 per item (USD 1.34) DM 18.00 per item (USD 9.64)	Authors Performers Producers audio/video
Hungary	Decree No. 15 of 20 November 1982	Blank audio tape: Blank video tape:	8% of sale price 8% of sale price	Authors Performers Producers audio/video
Iceland	LAw No. 78/1984 of 30 May 1984	Blank audio tape: Blank video tape: Audio hardware: Video hardware:	IK 10 per piece (USD 0.19) IK 30 per piece (USD 0.57) 4% of sale price 4% of sale price	Authors Performers Producers audio/video
Portugal	Law No. 45/85 of 17 September 1985	Blank audio tape: Blank video tape: Audio hardware: Video hardware:	to be decided	Authors Performers Producers audio/video
Spain	Law No. 22/1987 November 1987	Blank audio tape: Blank video tape:	to be decided	Authors Performers

SOURCE: Office of Technology Assessment, 1989.

Table 5-2.-Taxation on Private Copying

Country	Date of law	Basis of tax	Rate of tax	Total Revenue collected	Amount distributed to right owners	Amount retained by State as fiscal revenue
Norway	Law No 74 entered into force on 1 January 1982	Blank audio tape:	NOK 3.00 per tape (USD 0.44)	1988 *tape* levy NOK 45,000,000 (USD 6,621 ,900)	NOK 25,000,000 (USD 3,679,180) (NOK 4,000,000 or USD 588,600 for producers of phonograms)	NOK 15,000,000 (USD 2,207,500)
		Blank and pre-recorded video tapes:	NOK 15.00 per tape (USD 2.21)			
		Recording equipment: (audio/video)	N/A	Hardware: audio/video NOK 65,000,000 (USD 9,585,000)	Nil	NOK 65,000,000 (USD 9,565,000)
Sweden*	Law of 24 June 1982 (came into force 1 July 1982)	Blank audio tape:	SK 1.50 per tape (USD 0.23)	June 87/June 88 SK 130,000,000 (USD 20,300,000)	SK 3,000,000 (USD 470,000) to right owners in the music field including SK 848,000 (USD 132,700) to producers of phonograms	SK 127,000,000 (USD 19,830,000)
		Blank and pre-recorded video tapes:	SK 15.00 per tape (USD 2.35)			

NOTE. *It should be noted that the amount distributed to right owners has remained unchanged for the past three years whereas the total revenue collected by the State has increased substantially

Exchange rates at 13 March 1989

SOURCE: IFPI data provided by International Federation of Musicians, July 1989

Table 5-3.-Private Copying Royalties - Distribution

Country	Gross revenue	Distribution among right owners	Cultural fund/social fund
Australia	not yet implemented	Audio 2/3 producers 1/3 authors (producers have agreed to give 1/3 to performers)	15% Cultural/social fund
Austria	1988 Local currency Audio: AS 23,254,287 (USD 1,771,080)	Audio 17% producers of phonograms (LSG) 17% performers (recorded performances) (LSG) 3% performers (OSTIG - live performances) 63% authors (49% Austro-Mechana, 14% Literar Mechana & VG Rundfunk)	51% of the total remuneration must be used for social and cultural purposes by collecting societies.
	Video: AS 83,113,315 (USD 6,330,032)	Video 4% audio producers and performers (LSG) 3.9% performers (OSTIG - VBK) 14.8% authors (literary works)	
	Total: AS 106,637,602 (USD 8,101,1 12)	28.7% authors (musical works) 22.8% film/video producers 25.8% broadcasters (VG Rundfunk)	
Finland	1987	(1/3 of total income distributed)	66% Cultural Fund for the promotion of national cultural investment in Finnish phonograms and video productions.
	Audio: FM 13,937,813 (USD 3,198,946)	Audio 25.5% producers of phonograms 25.5% performers 44% authors (musical works) 5% writers and publishers	
	Video: FM 30,606,371 (USD 7,070,513)	Video 12.8% authors (musical works) 3.2% producers of phonograms 6% recording artists	
	Total: FM 44,744,184 (USD 10,269,478)	30% actors/choreographers/dancers 6% directors 12% authors (literary works) 30% journalists/interpreters/scenery and costume designers and cameramen	
France	1988	(75% of income distributed to individual right owners)	The collecting societies must use 25% of revenue for the promotion of audio/ audiovisual productions and live performances.
	Audio: FF 103,165,757 (USD 16,313,954)	Audio 50% authors/publishers of musical works 25% performers	

Table 5-3. - Private Copying Royalties - Distribution (continued)

Country	Gross revenue	Distribution among right owners	Cultural fund/social fund
Germany (Federal Republic)	1987 Audio: DM 28,600,000 (USD 15,318,693) Video: DM 64,900,000 (USD 34,761 ,650) Total: DM 93,500,000 (USD 50,080,343)	Audio 42% authors/publishers of musical works (GEMA) 269% performers (GVL) 15 1% producers of phonograms 16% authors of literary works (VG WORT) Video 21% authors/publishers of musical works (GEMA) 134% performers (GVL) 7.6% producers of phonograms (GVL) 8% authors of literary works (VG WORT) 50% film/video authors and producers	None by law but the collecting societies provide cultural funds and social welfare schemes
Hungary	Audio: FT 22,000,000 (USD 405,400) Video: N/A	Audio 20% record producers (Hungaraton) 30% performers 50% authors Video 70% authors and other copyright owners 30% performers	The share to performers must be used for social purposes and not for individual distribution.
Iceland	N/A	(85% of total revenue is distributed) Audio 23% producers of phonograms 23% performers 46% authors (musical works) 8% authors (literary works) Video Not available	15% Cultural Fund supervised by the Ministry of education
Spain	Not yet implemented	(80% of total revenue is distributed) to right owners) Audio 40% authors 30% producers of phonograms 30% performers Video 40% authors 30% producers of videograms 30% performer	20% Cultural Fund

Chapter 6

The OTA Survey

CONTENTS

Page

WHY DO AN OTA SURVEY? ..*** ..* b**. *..9 ***0 ***0..0....*..*.**. 139
Recency of Surveys ..** ... **** **** **** **** ****, **. ..*. a m....*.*. 139
Biases and Lack of Comparability of Previous Studies 141
Data Not Available for Examination ... *.** *.. .*. ..*. m ****m***.**. 142
Narrowness of Focus .**** **. .**. **** *.990 **** **.9 *.. * a *****..** 142
GOALS OF THE OTA SURVEY .* O*. s *e**.***.*.*****.**,.**.*.***.. 143
DESCRIPTION OF THE FINAL QUESTIONNAIRE 144
Study Population, Design, and Sampling .*. . * 6 *, * 144
The Field Period .**. .9m9*** .*** *0** **** ... ******089**********. 145
SUMMARY OF SURVEY FINDINGS .**** ..*9. ,**=*** .0 m**..**.**,*, 145
MUSIC LISTENING IN AMERICA ... .,. ... ...,. ... .b. 147
CONSUMER AUDIO TECHNOLOGY .**. .*. . e*********.*.**,,*,**** 147
THE MARKET FOR PRERECORDED MUSIC 148
MOST RECENT MUSIC PURCHASE EXPERIENCE 148
Projection of Music Purchases b.. ..oo. ... ... .o. 148
MOST RECENT LISTENING EXPERIENCE 149
Homemade Recordings in the Most Recent Listening 150
PREVALENCE OF HOME TAPING .* * . * . * * * . * * * . . . . . * ..****.** 151
Home Taping From Broadcast Formats .* * 0 * * * * * * . . . * * * * . *****...* 152
Home Taping From Prerecorded Formats 153
Total Taping Estimate . . . * . . * * * . . * * * * * * * * * . . * . * . . * . * . * * * * *....*. 153
PROFILE OF THE HOME TAPER 154
Album v. Selection Taping . **O*.****.***..***.**.....****, 155**
Source of Copy: Recording Format .*m*. *.*. 9*. *. *. ***.0.***.*., 156**
Source of Original: Own v. Others' 156
Permanence of Tape Libraries .*..0*.*.*****.*..******..***.*.. 156**
Reasons for Taping 157
COPYING AND THE RECORDED MUSIC MARKET 167
Sales Displacement of Home Taping .. b, ... 157
Stimulative Effects of Taping .. Oo. .0. o.o*. ** ***. **** . * *o***.... 159**
Recording of Noncopyrighted Material b 160
Taping Technology and the Home-Tape Inventory ... * * * o **..*..*. 160**
HOME VIDEOTAPING 161
Videotape Copying .8* **** **** **** **0* ***e *.*.99*****..*.*.*** 162**
Comparison of Video- and Audiotaping Behaviors 162
PUBLIC ATTITUDES .. e.*. ... **** ..o. *,*o. o,, *o. .o. ,, o .***.,... 163**
Attitudes Toward Taping 163
Fairness of Taping 164
Attitudes Toward Policy Changes 164

Tables

Table *Page*

6-1. Surveys on Home Audiotaping .*b**...**********.*..*,..***.* 140**
6-2. **Projected Purchasing/Taping Activity 149**

WHY DO AN OTA SURVEY?

Very early in the study it was clear that OTA needed its own survey of home taping and copying behavior. A number of previous surveys of taping behavior had been performed, but they did not meet OTA's needs in developing and discussing policy options for Congress.

The authors of a previous OTA study, ***Intellectual** Property Rights in an Age of Electronics and Information*, noted the need for a new survey. In its brief review of surveys of taping behavior, the report noted that "[existing surveys vary considerably, and rapid changes in technologies and use make previous surveys of harm increasingly less relevant. Conducted by parties involved in the intellectual property debate, most of the surveys that are available are, moreover, subject to bias."[1] A congressional request letter for the home copying study[2] cited the above passage to support the need for a new survey.

A review of the earlier surveys at the beginning of this project confirmed the view that they were not a suitable basis for a congressional policy study. Briefly, there were four problems.

First, several years had passed since the most recent surveys of home-taping behavior, and the current rate of technological change may have rendered their results less than useful.

Second, most previous surveys were performed by the electronics industry and the recording industry groups, or by other organizations that were parties to the home-copying debate. Although many of these were professionally prepared surveys, they nevertheless reflected fundamental biases, as will be discussed later. Further, the surveys were very different in methodology so that their results could not be compared.

Third, in many cases, the published reports on these surveys were incomplete. Often the precise wording of questions, specific details on the sampling plan, or other data were not available for examination.

Finally, the OTA assessment needed a broader empirical focus than previous studies offered. Earlier studies had focused only on one medium, usually audiotaping. To provide a context for policy options, OTA needed some comparable information on different types of copying and on possible similarities and differences in behavior. In addition, OTA needed information on public perceptions of and opinions on various policy alternatives, preferably from the same population.

Recency of Surveys

The age of the surveys was probably the least important of the objections, but it was still a troubling one. Technology has been changing rapidly; new products have been entering the market place, and their availability has given consumers new options in their purchasing and copying behavior.

A number of surveys of home audiotaping behavior were conducted in the late 1970s and early 1980s. (See table 6-1 for a summary of previous surveys of home taping reviewed by OTA.) The most recent major survey was

[1] U.S. Congress, Office of Technology ***Assessment, Intellectual** Property Rights in an Age of Electronics and Information*, OTA-CIT-302 (Melbourne, FL: Kreiger Publishing Co., April 1986), p. 201.

[2] Letter from Senator Dennis De Concini, Chairman, Senate Subcommittee on Patents, Copyrights and Trademarks, and Representative Robert W. Kastenmeier, Chairman, House Subcommittee on Courts, Civil Liberties and the Administration of Justice to Mr. Frederick Weingarten, Office of Technology Assessment, May 8, 1987, p. 2.

Table &I. -Surveys on Home Audiotaping

Tie	Sponsor	Surveyor	Year(s)	Methodology
The Prerecorded Music Market: An Industry Survey	Warner Communications Inc.	National Analysts, Div of Booz, Allen Hamilton & Co.	1978	3,385 personal interviews
A Study on Tape Recording Practices among the General Public	Recording Industry Assn. of America/National Music Publisher's Assn.	The Roper Organization	1979	2,004 adults plus 131 10 to 17 year olds; telephone interviews
A Survey of Households with Tape Playback Equipment	Copyright Royalty Tribunal	William R. Hamilton & staff	1979	1,539 telephone interviews, aged 14 and over
Blank Tape Buyers: Their Attitudes and Impact on Prerecorded Music Sales	CBS Records	CBS Records Market Research	1979-80	7,500 telephone interviews; 1,000 mail interviews; 1,000 in-store interviews – all record & tape buyers
Home Taping: A Consumer Survey	Warner Communications, Inc.	National Analysts, Div. of Booz, Allen Hamilton & Co.	198(-82	2,370 face-to-face interviews
1981 Estimate of Loss Due to Home Taping: Tapers Reports of Replacement	Warner Communications, Inc.	WCI Consumer Research	1981-82	3,264 mail interviews with diary, aged 10 and above
Why Americans Tape: A Survey of Home Audiotaping in the U.S.	Audio Recording Rights Coalition	Yankelovich, Skelly & White, Inc.	1982	1,018 telephone interviews with persons aged 14 and over who had taped in past 2 years
Home Taping in America: 1983 Extent and Impact	Recording Industry Assn. of America	Audits and Surveys	1983	1,354 mail interviews and diaries; 589 personal interviews and tape audits

SOURCE: Office of Technology Assessment, 1989

published in 1983 for the Recording Industry Association of America (RIAA).[3] Thus, most studies were completed before the wide availability of portable walkabout tape players and compact disc players, technologies that are having a profound effect on home entertainment. The most recent survey that included consumer attitudes toward copying behavior and possible policy alternatives (e.g., the acceptability of a tape levy to offset losses due to copying) was published in 1979 by the Copyright Royalty Tribunal.[4] It is likely that there have been changes in attitudes and opinions since that time,

[3]Audits and Surveys, *Home Taping in America: 1983, Extent and Impact, report* prepared for RIAA, New York, NY, 1983.

[4]Copyright Royalty Tribunal, *A Survey of Households with Tape Playback Equipment,* Washington, DC, September 1979.

Biases and Lack of Comparability of Previous Studies

Table 6-1 shows that most of the institutional sponsors of previous surveys of home taping were stakeholders in the home-copying debate. Such sponsorship does not necessarily produce a biased study. A study that was produced for advocacy purposes is immediately suspect, however, and if complete data are not available for examination, such suspicions cannot be put to rest. While most of the surveys were performed by experienced survey research firms that used generally accepted survey and statistical techniques, biases could still arise in the wording of questions, choices of measures, or selection of questions to be asked.

Previous surveys have used various methodologies and measures of taping activities. Survey methodologies have ranged from face-to-face interviews to audits (actually counting tapes and records owned) to mail surveys to telephone interviews, as shown in table 6-1. To measure taping activities, some surveys have used the "number of tapes" purchased or used,[6] others the "instances of taping,"[7] and still others the "number of pieces of music copied."[8] In addition, some questionnaires asked about taping activities in general, while others focused on one specific instance of taping. The populations varied as well, with some surveys interviewing the general public, some interviewing only people who made home tapes, and some focusing on people who frequented record stores.

With all these differences in selection of question, population, and unit of measure, it was extremely difficult to resolve differences among survey results. For example, *Why Americans Tape*, commissioned by the Audio Recording Rights Coalition found that home audio recording stimulated sales of prerecorded material. This was based on a large number of positive responses to questions such as, "Have you ever discovered that you like performers or composers as the result of taping one of his or her albums from a borrowed recording?" and "Has this ever led you to buy a record or prerecorded tape of this performer or composer?"[9] On the other hand, *Home Taping in America*, commissioned by the RIAA, found that taping did not stimulate sales. In personal interviews, subjects were asked, "Thinking of the (record/tape) you bought most recently, which of the following reasons on this card, if any, best describe why you bought it?" Of nine suggested reasons, only a small number of respondents selected "heard other music by artist/group on a home-recorded tape" or "heard a home-recorded tape of it."[10] Thus, it was clear that raising the question in different ways could elicit very different answers. While it can sometimes be argued that one formulation of a question is "better" than another in an objective sense, the choice of a "better" formulation is often a matter of opinion that will be influenced by the motivations of the survey sponsors and the expected uses of the survey results.

---

[5]For example, see CBS Records Market Research, ***Blank Tape Buyers: Their Attitudes and Impact on Prerecorded Music Sales, 1980.***

[6]Audits and Surveys, op. cit., footnote 3.

[7]Copyright Royalty Tribunal, op. cit., footnote 4.

[8]The Roper Organization, A *Study* on ***Tape Recording practices of the General Public,*** June, 1979.

[9]Yankelovich, Skelly, and White, Inc., Why ***Americans Tape: A Survey of Home Audiotaping in the United States,*** report prepared for the Audio Recording Rights Coalition, September 1982.

[10]Audits and Surveys, op. cit., fOOtnOte 3.

Data Not Available for Examination

Different measures and different forms of questions made it difficult for OTA to use previous studies for purposes of comparison in developing its policy analysis.

More problematic, however, was the fact that many of the previous surveys' data were not available for detailed analysis, or for independent replication. In some cases, it was not possible to determine the exact wording of questions or instructions to respondents. For example, the survey completed by Audits and Surveys for the RIAA[11] examined the taping behavior of several hundred people who maintained taping diaries during a month of 1983. The report on the survey did not, however, elaborate on the instructions given to respondents or the criteria they were to use in classifying their reported behaviors. In addition, a 1980 report by CBS Records Market Research indicated that blank tape purchasers 'primarily tape to make custom tapes and to save money," but did not indicate the precise questions used to elicit these results.[12] Similarly, the report was based on the results of three separate surveys, but did not indicate how they were combined to produce a single result.

Reports on some other surveys did provide exact wording for the questions reported. It was not always clear, however, that *all* questions were reported, **nor was it possible to obtain responses to the questions that were not reported. Thus, OTA could not use the results of the previous surveys, except to note general trends.**

The OTA report will occasionally refer to previous surveys and compare the results of the 1988 OTA survey with some previous study, but this must be done with caution, **since the results are comparable only in the most general sense.**

Narrowness of Focus

Most previous work focused on one particular type of copying. The surveys **in table 6-1, for example, deal only with audiotaping behavior. Some of these studies had been remarkably detailed as they intensively explored such topics as the amount of time spent making audiotapes, the numbers of tapes used, the types of music copied, the numbers of pieces of music recorded per tape, etc. The survey sponsors often considered such detailed data necessary both to understand their markets thoroughly and to support partisan positions, such as claims of economic harm to the recording industry. However, this wealth of detail would be of little help to Congress in understanding how audio taping fits into the general pattern of home taping and copying.**

A more general understanding of this pattern would be very useful in developing policy alternatives. It would be helpful to understand, for example, whether people who audiotape frequently also videotape frequently. Is there some specific group of people who consistently make home copies of copyrighted material of every type? Or are the users of audiotapes, videotapes, and computer copies different groups of people with different sets of motivations and incentives? Previous studies were not helpful in answering these questions.

Similarly, few of the previous surveys closely coupled a study of taping or copying behavior with attitudes about intellectual property. They would thus be of little help in determining which kinds of home copying activities tended to violate contemporary Amer-

[11] Audits and Surveys, op. Cit., footnote 3.

[12] CBS Records Market Research, op. cit., footnote 5, p. 11.

ican social norms and whether the attitudes of home copiers were fundamentally similar to those of people who did not make copies.

Given the rapidity of technological change and the blurring of boundaries between different copying technologies, Congress may want the option of dealing with home copying in a general way, rather than on a piecemeal basis. This necessitates some grasp of the general pattern of taping and copying. Similarly, Congress may want to understand differences, if any, between copiers and the rest of the population, before selecting a policy alternative.

GOALS OF THE OTA SURVEY

OTA had some specific goals in developing this survey. They met with varying degrees of success.

The first goal was to manage the problem of bias. OTA recognized from the outset that it would be impossible to eliminate all bias from its own survey. The objectives here were more modest. The first was to minimize bias to the extent possible by avoiding some of the problems observed in previous studies. Second, and more important, was to use an open process for developing the survey approach and the survey instrument. In this way, areas of unavoidable bias, disagreement, or uncertainty, could be clearly identified and discussed. Therefore, outside survey experts, stakeholders, and members of the public were involved in every step of the survey development process. The review process is discussed in detail in appendix A.

The next goal was to develop a survey that would be helpful in developing useful policy options in an age of rapid technological change. Two major objectives supported this goal. First, the survey was to include questions on a range of home-copying activities, not just audiotaping. It was hoped that the survey could identify similarities and differences in usage across technologies to help assess whether the same policy levers could affect different types of copying behavior. Given limited time and resources, this objective was only partially fulfilled. The final OTA questionnaire included questions about audio and video copying. The second objective was to gather information on public awareness of and opinions on policy issues. There had been a few public opinion polls on some of the specific remedies. For example, the Copy-right Royalty Tribunal conducted a poll that explored peoples' attitudes toward possible remedies such as a tax on audio tape.[13] OTA planned to examine attitudes and opinions in light of copying behavior to determine those that were widely held and those that were peculiar to people who copied.

Another goal of the OTA survey was to provide information in a form that would be useful in an independent assessment of the economic effects of copying on the copyright-holding industries. Results of several previous surveys have been used to estimate alleged "economic harms" to industry. OTA intended to pursue economic analyses that would weigh impacts on the general public, as well as on the industries involved. The survey represented one phase of data collection for these analyses, which are described in chapter 7.

The final goal of the OTA study was to provide an open and available database on home copying that could be used or reanalyzed by others. The OTA survey instrument and all data collected are available through the National Technical Information Service. It is hoped that this survey will be the basis for future studies.

[13] Copyright Royalty Tribunal, op. cit., footnote 4.

DESCRIPTION OF THE FINAL QUESTIONNAIRE

The final questionnaire was introduced to respondents as a national survey on how the public uses audio and video technology. The topic of copying was not flagged as the particular area of interest. Indeed, to establish the proper context for questions about taping and copying, it was necessary to ask many general questions about peoples' use of home audio and video technology.

The final questionnaire was devoted primarily to the use of home audio technology, with a small section on video technology. As mentioned earlier, the original plan called for questions on computers as well. One goal of the survey was to compare different types of home copying and to determine whether the pattern of home audiotaping was similar to other types of home copying. As the survey instrument was developed, however, it became clear that there was not enough time to cover all three subject areas adequately.

To retain some measure of nonaudiotaping activities, the final survey included a short section on videotaping and copying. The videotaping section, while considerably shorter and less detailed than the audio section, was designed to parallel some of the audiotaping measures. The section included questions on videocassette recorder ownership and on recent VCR-related activities, including recording off-the-air, renting or buying tapes, and copying prerecorded videotapes. People who did not have access to VCRs or who had not made a tape within the past year had to answer only a few questions in this section.

The audio section was the longest segment of the survey instrument. It included questions on music listening, ownership of audio recording and playback technology, purchase of prerecorded audio products, as well as home taping behavior and motivations. People who did not listen to recorded music were required to answer only a few brief questions in this section.

Music listening formed the context for questions in the audio section. The questionnaire attempted to develop measures on the importance or value of music listening to the respondent. It then explored all the different ways in which the respondent acquired the recorded music that he or she listened to most recently, including purchases, gifts, and taping from various sources. The survey continued with detailed questions about the most recent experiences of purchasing and taping prerecorded music, where appropriate. The survey also attempted to establish an inventory of the number of recordings and the types of audio listening and recording equipment available to the respondent.

A final section of the survey examined attitudes of the public –tapers and nontapers– about the home taping of music. In addition, this section gauged public opinion toward a range of proposed policy alternatives to address the issue of the home taping of music.

A copy of the questionnaire is included in appendix B of this report.

Study Population, Design, and Sampling[14]

The target population of this study consisted of the noninstitutionalized population of the United States, aged 10 and older. Since the issues to be addressed by the survey were broader than measuring the current quantity of home taping, the survey design did not

[14] This section is taken from Schulman, Ronca and Bucuvalas, Inc., ***Survey of Home Taping and Copying: Final Report. Volume 2: Detailed Findings on Home Audiotaping***, report prepared for Office of Technology Assessment by John M. Boyle, Kenneth E. John, and Jane A. Weinzimmer (New York, NY: February 1989), pp. 8-20; and Appendix A (Springfield, VA: National Technical Information Service, October 1989).

adopt a sampling frame in whole or part based on home tapers, as several studies had done in the past. Rather, the population of interest was the potential market for prerecorded audio products and those potentially affected by governmental policy related to audiotaping. Past research suggested that the entire population of the United States, aged 10 and over, was part of that market. Consequently, the study design called for a national sample of the population of the United States, aged 10 and over.

Previous research had established the importance of the younger age cohorts in both the market for prerecorded music and the use of home taping. Since it was important to represent younger persons in the sample adequately, even though response rates among younger populations are usually lower than average, a disproportionate sampling strategy was adopted to ensure adequate representation of the population under 35 years old. The sample was stratified by age cohort and a within-household sampling technique was used to increase the prior probability of selection for the 15 to 29-year-old age cohorts. The use of a probability-based selection, rather than a quota sampling approach, ensured the statistical validity of the sample. The specific details of the sampling procedures are presented in the contractor's report.

The Field Period

After final approval of the questionnaire, interviewing began in late September 1988 and continued until late October. A total of 1,501 interviews, averaging 25 minutes, were completed in this period. As in all population surveys, the demographic characteristics of the achieved sample varied from current population estimates as a result of nontelephone households, multiple-telephone households, household size, and differential participation rates. The sample for the OTA survey was weighted to current population estimates, based on household size, age, sex, and race. The survey findings from this weighted sample of the population of the United States, aged 10 and older, should have been projectable to the total population from which it was drawn, within the limits of expected sampling variation. Further details about the sample appear in the contractor's report.[15]

In the completed sample there were 563 interviews with a nationally representative sample of persons who had taped music from radio, television, records, tapes, or CDs in the past year. The survey sample also included a nationally representative sample of 897 persons who had purchased a record, prerecorded cassette tape, or CD in the past year. In addition, there were 471 completed interviews with a nationally representative sample of people who had used an audiotape recorder in the past year to tape things other than music. In addition, interviews were completed with a nationally representative sampleof717 persons who had acquired a videotaped program by rental, purchase, home recording, or gift within the past year. Thus, the survey generated samples of adequate size to afford some reasonably detailed analyses of home audio- and videotaping activities.

SUMMARY OF SURVEY FINDINGS

The OTA survey found that 4 in 10 of a nationally representative sample of persons aged 10 and over had taped recorded music (either from a broadcast or from a record, prerecorded cassette tape, or compact disc) in

[15]Schulman, Ronca, and Bucuvalas, Inc., op. cit., footnote 14.

the past year. Thus, home taping was much more prevalent in 1988 than it had been in 1978-79, when surveys found that 21 to 22 percent of the population were past-year tapers. The 1988 finding was roughly similar to the taping prevalence found in a 1982 survey.

Music tapers, in general, had a greater interest in music, listened to more music, and purchased more prerecorded music products than did nontapers. Conversely, the majority of nontapers listened to little recorded music.

Audiocassette was the most frequently purchased format of prerecorded music. The survey found, however, that tapers more frequently copied from records than they did from tapes. People who purchased a prerecorded item with the intention of taping from it (as did about one-seventh of the sample) were far more likely to purchase a record or CD than a prerecorded audiocassette. Many people seemed to copy for the purpose of "place-shifting," that is, copying music from records and CDs to the more portable cassette format.

The survey found that a large majority of people who copied from a prerecorded format in their last taping session were copying their own record, tape, or CD for their own use. They usually copied with the intention of keeping the tape permanently. About one-fifth taped a copy for a friend or copied a borrowed item. Few copies were made from homemade tapes.

People who taped from radio broadcasts were less likely to copy full albums than those who copied records, cassettes, or CDs. About half of the last home taping of prerecorded formats involved taping of whole albums.

While home taping certainly displaced some sales of prerecorded products, survey data also pointed to some stimulative effects. Home tapes had value in promoting songs and performers. In addition, a significant number of purchasers bought prerecorded products with the intention of copying them.

The taping of noncopyrighted material occurs more frequently than the taping of prerecorded music. Perhaps three-fourths of taping occasions involved taping something other than music. Tapes of noncopyrighted material varied widely in type, length, and lasting value, with some, like answering machine messages, being rerecorded often. This survey did not attempt to determine how much space in home libraries was occupied by prerecorded music as opposed to noncopyrighted material.

The survey found that people discriminated little with respect to the grade of blank tape they used for recording voice as opposed to music. Indeed, a large majority of respondents had no idea of the grade of tape they used in their last taping session.

The survey found that the availability of dual-cassette and high-speed-dubbing technology had little relationship to the number of homemade tapes. People with many homemade tapes, or with few, or even none, seemed to own equipment with these capabilities in roughly similar proportions. Thus, technology did not seem to drive copying behavior. Distribution of these features may have reflected the number of players in the home, or their recency of purchase, rather than taping activity.

Most videocassette recordings, unlike their audio counterparts, were made for temporary use. Most videotaping fit the definition of 'i time- shifting" outlined in the *Sony* decision. A few specific program types– including concerts and educational shows— were copied with the intention of keeping.

The survey found that, while television taping was common among VCR owners, copying tapes was not. Of the tapes that were copied, only a minority were made from an original that belonged to the copier. Some originals were rented from video stores, but the bulk were obtained from friends. Thus, there appeared to be a modest level of exchange of

videotapes among friends for the purpose of copying.

While the survey found a somewhat higher incidence of video copying among music tapers than among nontapers, there was no strong convergence between video- and audiotaping behavior. The survey found that much home-video and home-audio copying was done by different people, for different reasons.

Although the general public was unfamiliar with copyright law as it related to home taping, people did have opinions on the norms governing acceptable behavior in the area of home taping. In general, both tapers and nontapers believed that it was acceptable to copy a prerecorded item for one's own use or to give to a friend. The only copying behavior that was universally condemned —by tapers and nontapers – was copying a tape to sell.

Although most respondents had little idea whether the existing situation in home copying was fair to the recording industry, to performers, or to the consumer, they did strongly oppose all the tested suggestions for changes to the status quo that would impose user fees or limit taping by technological means.

MUSIC LISTENING IN AMERICA

The survey documented an active interest in music listening among the American public, with frequent listening to music on radio, television, records, tapes, and compact discs. A majority (56 percent) of this nationally representative sample of persons aged 10 and older considered listening to music as "extremely" or "quite" important to them (see table C2-1).[16] Only 7 percent reported that they had spent no time in the last 7 days listening to music on the radio and television. By contrast, a majority of the sample (51 percent) reported 7 or more hours of listening to broadcast music.

Generally speaking, the survey found that people listened to broadcast music more frequently than to music on records, tapes, and CDs. Indeed, 43 percent of the survey respondents reported that they spent no time listening to music on prerecorded formats in the past week. Nonetheless, a majority of survey respondents (56 percent) reported listening to recorded music in the past 7 days (see table C2-4).

CONSUMER AUDIO TECHNOLOGY

Given the widespread interest in music listening, it is not surprising that the survey found that virtually everyone had one or more types of audio playback equipment. The proportion of survey respondents with record players in 1988 was 81 percent, effectively unchanged from survey estimates of 78 percent in 1978.[17] But the portion of the population with cassette players had more than doubled in the past decade, from 38 percent in 1978 to 94 percent in this survey (see table C2-7).

Most respondents had a number of different types of cassette player/recorders. Only 16 percent had only one of the four types of tape decks examined in the survey. Nearly a quarter had two of the four types; 27 percent had

[16] Note: All survey tables are located in appendix C of this report, and the numbering is identical to that in the SRBI report (*op. cit.*, footnote 14). Sampling precision, statistical significance, and confidence levels are discussed in the SRBI report, pp. 14-20.

[17] Warner Communications Inc., *The Prerecorded Music Market: An Inventory Survey*, March 1978.

three of the four types; and another 27 percent had all four kinds of audio cassette equipment (see table C2-6). This actually understand the number of cassette decks owned or used by respondents because the survey did not inquire into the number of player/recorders that the respondent had within each class.

This survey did not examine whether the tape players had recording capabilities. Most tape players currently on the market (except for automobile stereos and some walkman-type players) can both play and record. Hence, most tape players are assumed to be recorders as well. The survey findings suggested that virtually everyone aged 10 and older had immediate access to the technology to copy music recordings.

THE MARKET FOR PRERECORDED MUSIC

Given the widespread ownership of cassette players, it is not surprising that the audiocassette was the recorded music format most frequently owned by the sample population. Nearly six out of seven respondents (84 percent) reported owning one or more audiocassette tapes. Indeed, nearly half (49 percent) of respondents reported that they owned 11 to 50 audiotapes. It should be noted that while audiotapes had achieved the greatest penetration rate, the LP record remained the most numerous format for prerecorded music in home inventories. The compact disc had the smallest penetration rate: 18 percent of the sample reported owning any compact discs. Among this sample, 83 percent reported having purchased a record, prerecorded cassette tape, or CD in the past. Over half (58 percent) had purchased recorded music in the past year. The primary market for prerecorded music was among the young. The incidence of past-year purchase of records, cassettes, and CDs was 89 percent among the 15 to 19-year-olds, 78 percent among 20 to 24-year-olds, and 71 percent for the 25 to 29-year-olds, and 64 percent among 30 to 34-year-olds.

MOST RECENT MUSIC PURCHASE EXPERIENCE

The recorded music format most frequently purchased in the past year was the prerecorded cassette. Seven out of ten past-year buyers of prerecorded music (70 percent) reported purchasing a prerecorded cassette on their most recent purchase occasion, compared with 18 percent buying LP records, 12 percent buying compact discs, and 3 percent buying 45-rpm records. When the purchase period was restricted to the past month's purchases and all purchases were counted by type, however, the survey findings suggested that in the last quarter of 1988, prerecorded cassettes represented 51 percent of the music recordings sold to sample respondents; long-play records accounted for 22 percent of units sold; compact discs accounted for 21 percent; and 45 rpm records accounted for 7 percent of the units sold.

Projection of Music Purchases

Schulman, Ronca and Bucuvalas used "past-month" purchases to estimate the number of units (records, prerecorded cassettes, and CDs) purchased in the United States each year.[18] SRBI arrived at a "corrected" estimate of approximately 750 million units per year.

[18] The SRBI report includes an estimate of average annual purchases based on analysis of most recent purchases (see SRBI Report, op. cit., footnote 14, p. 54). In comparing their projection with actual 19SS sales, as reported by RIAA, however, SRBI finds their projection of 1,500 million purchases per year is too large by about a factor of 2. SRBI attributes this problem to recall error and applies a 100 percent correction factor to develop what they consider a more a reasonable estimate: 750 million purchases per year.

OTA made an alternative estimate of the total market for prerecorded music by using respondents' most recent purchases during the past year. One motivation for this was that the number of respondents was larger for "past- year" events. Also, using more aggregated data for the recency of the event and number of items per event could help reduce the effect of recall errors. OTA used the data presented in tables C4-2 and C4-5 on the most recent purchase to approximate a weighted average of the frequency of purchases in a year[19] and an average number of items purchased per event (based on past-year purchasers). Assuming a U.S. population of 204 million persons age 10 and over, OTA's method yielded an estimate of 885 million annual purchases of prerecorded music items.

Thus, the survey data yielded a fairly broad range of values for estimated yearly purchases, depending on the specific data items and methods used (see table 6-2). But the range was not very far from RIAA's report that a record 762 million units were shipped in 1988.[20]

Table 6-2.-Projected Purchasing/Taping Activity

	SRBI[a]	OTA[b]
Estimated number of yearly purchases (records, prerecorded tapes, and CDs)	750 million	885 million
Estimated yearly tapings[c] from prerecorded sources	600 million	578 million
Estimated yearly tapings[c] from broadcast sources	700 million	439 million

a *Estimates* in *first column* are from the final report by the survey contractor, Schulman, Ronca, and Bucuvalas, Inc (SRBI) They are calculated from '"past-month" activity, adjusted by SRBI's 100 percent correction factor Based on past-month tapers (N = 150 for prerecorded taping; N = 165 for broadcast taping)

b Figures in second column are OTA staff estimates, calculated from estimated yearly frequencies (See tables C5-12, C15-13, C5-6, and C5-7) Based on "past year" tapers (N = 406 for prerecorded sources, N = 336 for broadcast sources)

c "Tapings " refers to instances of recording Number of "taplngs " is not equivalent to number of filled blank cassettes or album equivalents.

SOURCE: OTA Survey (September-October 1966)

MOST RECENT LISTENING EXPERIENCE

To understand respondents' preferences and behavior in more detail, the survey examined the most recent experience of music listening. It is reasonable to expect that the respondent's recall of the nature and source of the recording heard on this occasion to be most accurate. Respondents were asked to report the last time they had listened to recorded music on audiotapes, records, or CDs, not including music on radio or television or background music in public places. In the majority (59 percent) of cases, survey respondents reported that their most recent listening occasion had been within the past week; for about 18 percent of respondents the last listening experience was within the past month (see table C3-1). In all, 88 percent had listened to music within the past year. These respondents were questioned about their listening experience in more detail.

[19]For example, if a person reported that the last time he bought a recording was 1 month ago, then an estimate of his yearly purchase frequency was 6 events per year, because (on average) the question would be asked midway between purchases.

OTA made some approximations in calculating the average frequency of purchases: "last week" was assumed to be a week ago, "last month" a month ago, "last year" a year ago, "year or more" as two years, "not sure" as never. This tended to underestimate the true frequency.

[20]RIAA Market Research Committee, 1989. (See table 4-1 in this report.)

Most respondents (63 percent) reported listening to music at home on their most recent listening occasion; 23 percent reported listening in a car. Most of the rest were at the home of a friend or at work.

About two-thirds (64 percent) of those listening to recorded music within the past year reported that they were listening to audiotapes on their most recent listening occasion. Records were a distant second, reported in only 21 percent of listening occasions. Compact discs were listened to in another 10 percent of cases. In 3 percent of cases, respondents reported that their most recent experience included a mixture of recorded formats – most often records and tapes (see table C3-7). In three-quarters of the cases (74 percent), the survey respondents were listening to their own records, tapes, or CDs, rather than someone else's. Those who were listening to their own recording were asked how they obtained the recording. In 74 percent of the cases, the listener had purchased the recording for himself. In another 12 percent of cases, the respondent reported that the recording was received as a gift (see table C3-13).

Homemade Recordings in the Most Recent Listening

As mentioned earlier, about three-fourths of respondents reported listening to their own recording on the last listening occasion. Of these, 10 percent reported that they had made the recording at home. The proportion of homemade tapes was almost twice as high among Blacks (20 percent) and 10 to 14-year-olds (18 percent). Perhaps surprisingly, the proportion of homemade tapes among recordings last listened to was found to be low among 15 to 19-year-olds (5 percent) (see table C3-13).

The survey findings thus documented that around 7.4 percent (0.10 x 0.74) of the listeners heard homemade tapes on their last listening experience. Indeed, if it is reasonable to assume that the 24 percent of recordings belonging to someone other than the respondent mirrored the same pattern, then around 10 percent of the music most recently played was a product of home copying. Moreover, the survey also found that 31 percent of the audiotapes that were borrowed or given to survey respondents were tapes that someone had made. Combining these sources produced an estimate that around 12 percent of the recordings most recently played by persons aged 10 and older were the product of home taping.



Photo m Office *of Technology Assessment*

Music tapers also buy recordings.

The most common sources of music for these homemade tapes were the records, cassettes, and CDs already owned by the respondent. Over one-third (37 percent) of these tapes were made from the respondent's own original recordings. Radio broadcast music was the source material for another 29 percent. Records, prerecorded cassettes, and CDs belonging to others were the source of music for most of the remaining tapes (22 percent). Fewer of the homemade tapes were copied

from other homemade tapes made by the listener (4 percent) or someone else (3 percent) (see table C3-13).

The sample size of respondents who had most recently listened to a homemade tape was small, so analysis of this group could only be suggestive. The data did suggest, however, that the youngest home-tape listeners were most likely to obtain material from radio. The data also suggested that about half (51 percent) of the tapes included one or more entire albums, while a little under half (46 percent) were made up of selections from a number of different albums. About 23 percent of the homemade tapes were exclusively complete albums, with no mixture of selections included (see table C3-15). To the extent that these data could be relied on, they suggested that about 3 percent (23 percent of 12 percent) of the recordings most recently played by the sample population were copies of albums in a form that should have been commercially available.

PREVALENCE OF HOME TAPING

One of the principal objectives of this study was to provide current estimates of the prevalence of home taping in the population. Home taping means the use of a tape recorder at home–to tape any sound, voice, or music, from any medium. A major concern in this study, however, was the copying of copyrighted music from recordings or from television and radio broadcasts.

This section describes the activities of persons who had used an audiotape recorder at home, within the past year, to tape music from radio, television, records, tapes, or CDs. Four out often respondents (41 percent) were "past-year music tapers" according to this definition. Men (44 percent) were somewhat more likely than women (38 percent) to be past-year tapers. Blacks (48 percent) were somewhat more likely than whites (40 percent) to have taped in the past year. These tapers include majorities of those aged 10 to 14 (80 percent), 15 to 19 (77 percent), and 20 to 24 (59 **percent)** years old (see table C5-1).

The finding that 41 percent of this nationally representative sample were past-year tapers suggests that home taping was nearly twice as prevalent in 1988 as was found by surveys in 1978 (21 percent)[21] and in 1979 (22 percent)[22] that used the same population and similar questions.

It is possible that much of the rapid expansion in home taping occurred between 1978 and 1982. The Yankelovich survey in 1982 found that the prevalence of taping in the pre*vious 3 months* was 29 percent among the population aged 14 and older.[23] Using the same period of opportunity and restricting the sample to those 14 and older, the OTA survey found a virtually identical rate of 28 percent in 1988 (see table *C5-3).*

The changes in the rates of home taping among the teenage population since 1978-79 was particularly notable. The 1979 survey cited previously found the prevalence of home taping highest among 14 to 15-year-olds (39 percent). The rate of taping was substantially lower among the 10 to 13-year-olds (27 percent), while among older teens (32 percent) and the 18 to 29 age group (32 percent) the rate was the same. It then gradually declined with age (see table C5-2).

[21] Warner Communications Inc., op. cit., footnote 17.

[22] The Roper Organization, op. cit., footnote 8.

[23] Yankolovich, Skelly, & White, Inc., op. cit., footnote 9.

The OTA survey found for three cohorts is essentially the same: 81 percent of 10 to 13-year-olds, 78 percent for 14 to 15-year-olds, and 82 percent for 16 to 17-year-olds. The prevalence of home taping had increased by more than twofold in each of these groups since 1979 (table C5-2).

The increase in taping among older persons since 1979 was not so dramatic – it was on the order of a 50-percent increase. One exception was the group aged 60 and over. Although taping was fairly rare (11 percent), it had more than doubled compared with the proportion (4 percent) found a decade ago (table C5-2).

It is notable that the prevalence of home taping had always been higher among current buyers of recorded music. The 1978 Warner survey found that the rate of past-year taping was 32 percent among persons who had purchased recorded music in the past year compared with 21 percent among all persons aged 10 and over. A decade later OTA found that the rate of past-year taping was 53 percent among past-year purchasers of recorded music, compared with 41 percent of all persons aged 10 and over. In both cases this meant that about three-quarters of past-year tapers were also past-year music buyers. But the proportion of tapers who were not buyers increased– from approximately 20 to 25 percent – over the past decade (see table C5-4).

A person may make a home tape of prerecorded music either by recording music played on TV or radio or by directly copying a prerecorded format (record, tape., or CD). This report refers to the former as broadcast taping (although some taping may occur from cable transmission), and to the latter as taping from a prerecorded format.

Home Taping From Broadcast Formats

Nearly half (45 percent) of the nationally representative sample of persons aged 10 and older reported that they had made an audiotape of music from radio or television at some time in the past (see table C5-5).

Of the total sample, 27 percent taped music from radio and television in the past year. These past-year broadcast tapers included a majority of persons aged 10 to 14 (64 percent) and 15 to 19 (67 percent). By contrast, the rate of past-year broadcast taping was 41 percent for those aged 20 to 24, 27 percent for those aged 25 to 29, and 20 percent for those aged 30 to 34. The survey data strongly suggested that broadcast taping, while not limited to the teen-age years, was far more characteristic of teens than of older persons (see table C5-6).

Those whose most recent broadcast taping occurred within the past month were asked on how many occasions, in all, they had made audiotapes of music in the past month. These occasions of taping were then summed across the sample. There were a total of 713 occasions in the previous month of taping from radio or television. This analysis put the role of teenagers in broadcast taping in stark relief. Persons aged 10 to 14 accounted for 33 percent of broadcast-taping occasions, while persons aged 15 to 19 accounted for another 31 percent (see table C5-9).

An estimated total of 850 tapes were made in the 713 taping occasions in the past month.[24] The survey questions did not assess how much tape was actually filled on these occasions. Thus, it was safer to describe these as

[24] Respondents who were not sure how many times they had taped or how many tapes they had used were given a conservative score of 1 for the missing values.

850 “tapings” (i.e., tapes used to record one or more musical selections) from radio and television. They were not equivalent to the number of blank tapes used or number of albums copied. A later section will consider the proportion of full albums to individual selections recorded in these tapings.

As would have been expected from the earlier survey findings on taping occasions, the bulk of broadcast tapings were made by teenagers. The 10 to 14-year-olds accounted for 37 percent and the 15 to 19-year-olds accounted for another 27 percent of broadcast tapings in the past month (see table C5-1O).

Home Taping From Prerecorded Formats

Half (50 percent) of this nationally representative sample of persons aged 10 and over reported that they had taped music from a record, prerecorded cassette, or CD at some time in the past. The lifetime prevalence of home taping from prerecorded formats was thus slightly higher than the lifetime prevalence of broadcast taping (45 percent) discussed in the previous section. It should be noted that this estimate of home taping from prerecorded sources did not include the copying of homemade tapes.

Of the total sample of persons aged 10 and older, 28 percent had taped music from records, prerecorded cassettes, or CDs within the past year. A majority of persons aged 15 to 19 (65 percent) and substantial minorities of those aged 10 to 14 (42 percent) and 20 to 24 (45 percent) copied prerecorded music within the past year. Similar rates of taping were found among 25 to 29-year-olds (31 percent) and 30 to 34-year-olds (35 percent). The rate declined further to only 20 percent among the 35 to 64-year-olds, while the rate of past-year taping among the over-65 age group was nearly nonexistent (4 percent) (see table C5-12).

Those who had taped from a prerecorded format within the past month were asked on how many occasions they had taped music from records, tapes, or CDs in the past month. These occasions of past-month taping were then summed across the sample. Respondents reported a total of 301 occasions of taping in the past month. The survey findings continued to confirm the major role of teenagers in music copying. Persons aged 10 to 14 (24 percent) and 15 to 19 (21 percent) were responsible for nearly half of the occasions of taping from prerecorded formats in the past month (45 **percent). Note that** this was a substan-is tially smaller share of prerecorded music copying than the 63 percent of past-month broadcast copying that they accounted for (see previous section). An estimated total of 736 tapes were made in the 301 taping occasions in the past month by this nationally representative sample of 1,501 persons aged 10 and over. Once again, since the OTA survey did not assess how much tape was actually filled on these occasions, it was safer to describe these 736 as tapings (i.e. tapes used to record one or more music recordings) from records, prerecorded cassettes, and CDs. As would have been expected from the earlier survey findings on taping occasions, teenagers accounted for the majority of tapings made from records, cassettes, or CDs. Tapes made by 10 to 19-year-olds accounted for 56 percent of all tapes made from prerecorded formats in the past month (see table C5-17).

Total Taping Estimate

SRBI used “past-month” data to estimate total annual taping in the U.S. population. Their “corrected” projections were about 700 million broadcast tapings and 600 million tapings from prerecorded sources per year.

OTA developed alternative estimates of annual taping that used a yearly frequency method similar to that used to project annual

purchases.[25] Using data on "past-year" tapings from tables C5-6 and C5-7 and from tables C5-12 and C5-13, OTA estimated that there were approximately 439 million broadcast tapings and 578 million tapings from prerecorded music formats in the past year (see table 6-2 for a summary of the OTA and SRBI estimates). The survey data supported a broad *range* of estimated values, depending on the data items and methods used. It is important to remember that both the SRBI and OTA estimates were of "tapings," not of full tapes or album equivalents.

PROFILE OF THE HOME TAPER

The survey findings allowed OTA to classify the sample population into one of four mutually exclusive categories of home taping of music. The largest category was those who had not taped music from radio, television, records, audiotapes, or CDs in the past year. Sixty-one percent of the population aged 10 and over fell into that category.

The remaining 39 percent of the population had made audiotapes within the past year.[26] Of these, those who taped only from radio or TV represented 11 percent of the sampled population, those who have taped only from records, cassettes, and CDs represented 12 percent of the population, and those who have taped from both broadcasts and recordings in the past year represented 16 percent of the sampled population (see table C5-19).

Table C5-19 shows the demographic characteristics of these four groups. Both 10 to 14-year-olds and Blacks had high taping profiles that included a high proportion of broadcast taping. While income did not seem to be a major factor in home taping, there appeared to be a higher rate of taping among those with incomes of over $50,000. These income groups were also less likely to be broadcast tapers.

What may be more important in understanding the past-year tapers is how music taping relates to other music-listening characteristics. The survey showed that the past-year music taper had a greater interest in music than the nontaper. The proportion of those who considered music listening extremely important increased from 16 percent of those who had not taped music in the past year to 35 percent of those who had taped from radio and television only, 23 percent of those who had taped from prerecorded formats, and 45 percent of those who had taped from both broadcasts and prerecorded formats in the past year (see table C5-20).

As a result, the music taper listened to more music, on average, than did the nontaper. Only 18 percent of nontapers listened to 20 or more hours of radio in the past week. By contrast, the proportion of music tapers listening to 20 or more hours of radio was 34 percent for broadcast tapers, 27 percent for those who taped recordings only, and 39 percent for those who taped both broadcasts and prerecorded formats. Music tapers also listened to more music on records, tapes, and CDs in the past week than did nontapers. The proportion of respondents reporting not listening to recorded music declined from 57 percent of nontapers, to 30 percent of broadcast tapers, to 20 percent of those who taped

[25] See discussion of purchase estimate and footnote 19.

[26] There was a slippage between th, 41 percent of the population who said that they had taped from a radio, television, records, cassettes, or CDs in the past year, and the combined estimates of 39 percent of persons who said that their most recent taping from radio and television or their most recent taping from records, tapes, or CDs occurred within the past year. Given the potential difficulties of classifying an activity that occurred about a year ago, OTA considered the differences in independent reports to be minimal.

recordings only, to 13 percent of those who taped both recordings and broadcasts. Simply stated, the majority of those who did not tape music did not listen to recorded music (see table C5-20).

Considering the interest of the music taper in listening to music and the frequency with which he listened to recorded music, it is not surprising that the survey found that the music taper was also the music purchaser. As the table shows, over half (53 percent) of those who had purchased any records, prerecorded cassettes, or CDs in the past year had also taped music from radio, television, records, tapes, or CDs. This figure actually understated the relationship of music taping and purchase, however. The total number of tapings made from prerecorded formats in the past month suggested that 56 percent of those copies were made by persons who had purchased a record, prerecorded cassette, or CD in the past month. Indeed, 88 percent of past-year music tapings from recordings were made by persons who had purchased records, cassettes, or CDs in the past year (see table C5-23).

The survey findings clearly indicated that music tapers were also music purchasers, and vice versa. Moreover, they also suggested that frequent tapers also tended to be frequent buyers. This association did not necessarily mean that home music taping stimulated buying prerecorded music or that the purchase of prerecorded music might not have been more frequent without taping. It did, however, indicate that any actions directed at music tapers would affect primarily the purchasers of recorded music.

Album v. Selection Taping

The type of taping done by home tapers determined whether they were producing an exact copy of a *commercially available product.* This issue revolved around whether home tapers were primarily creating customized selections of music, which did not exist in the current marketplace, or whether they were duplicating albums that could be purchased.

The survey findings helped to clarify this issue. The broadcast taping of music from radio and television was almost exclusively nonalbums. The survey responses suggested that only 8 percent of the most recent broadcast tapings involved the copying of an album, while another 15 percent might have involved a mixture of albums and selections. A majority of 56 percent reported that they were taping only singles or selections on that occasion (see table C6-1).

By contrast, album taping was much more widespread in the taping of recorded music. Among those who had taped records, cassettes and CDs in the past year, 70 percent reported taping one or more complete albums on their most recent taping occasion. As can be seen in table C6-3, the group with the highest proportion of album taping was the 10 to 14-year-olds, while the over-65 group had the lowest proportion. The variation by age was fairly small, however.

Cross-tabulating album taping with selection taping for the most recent taping experience from prerecorded formats enabled OTA to classify the population in terms of the contents of the last tape they made. Approximately half (48 percent) of the last home tapings of prerecorded music involved the taping of whole albums with no selections. This represent simple duplication of existing albums, either in their original or a different format. Another 21 percent of the most recent home tapings from prerecorded music involved the copying of whole albums in combination with selections from other albums or singles. The proportion of most recent tapings that represented selection taping, exclusively, was 21 percent. The remaining 10 percent of most recent tapings were only partially classifiable because of missing values on one or the other measures (see table C6-5).

Source of Copy: Recording Format

By definition, all current home taping is done onto an audiotape format, but there remains the question of the format of the original prerecorded material.

The survey found that half (49 percent) of those who had copied from prerecorded formats in the past year made their most recent taping from a record. Another 28 percent of the most recent tapings were from cassettes, while the remaining 18 percent of tapings were from CDs.

The format of the original material from which home tapes were made was quite different from the most recent purchase pattern seen earlier. Records represented 18 percent of most recently purchased recordings, but 49 percent of the recordings copied in the most recent taping. By contrast, the dominant format for buying prerecorded music— the cassette– represented only 28 percent of the most recent tapings from prerecorded format.

If the primary motivation for home copying was to obtain current releases without buying them, one would expect the same distribution of recorded formats copied as the distribution of formats purchased. This was not the case. It appeared rather that home taping was being done– at least in part – to convert recordings in other formats to the dominant playback mode. Since records and CDS cannot (usually) be played in cars and in portable playback equipment, it would appear that at least some home taping was being done to convert existing records to the more flexible format of audiotape.

Source of Original: Own v. Others'

All survey respondents who had copied from a prerecorded format in the past year were asked about the source of the original from which they made the most recent tape – their own, a recording borrowed from household members or family, one borrowed from friends, or one obtained elsewhere. The question was asked separately for complete albums being copied and for individual selections being copied during the last taping session.

The survey found that a majority of home music tapers, who were taping one or more whole albums in their most recent taping, were using their own original record, tape, or CD to make the tape (57 percent). Moreover, another 7 percent of home tapers were using an album owned by another member of their household (3 percent) or their family (4 percent) (see table C6-10).

Permanence of Tape Libraries

Nearly three-quarters of the most recent home tapings of prerecorded music were made for the taper's own use (73 percent). Another 7 percent of these tapings were made for another member of the household. About one-fifth (19 percent) of most recent home tapings were made by the taper for someone outside the household. The incidence of taping for outsiders was highest among those aged 15 to 19 (27 percent) (see table C6-12).

The survey found that the vast majority of home audiotapes were made to keep. Sixty-nine percent of those who made a tape for themselves from radio or television in the past year reported that the last tape they made was to keep, not to use temporarily. Even more strikingly, 85 percent of those who made a tape for themselves from records, tapes, or CDs in the past year reported that the last tape they made was made to keep. This is in sharp contrast to the pattern for videotaping, which will be discussed further in a later section.

Reasons for Taping

When asked in an open-ended fashion why they had made their most recent tape from a prerecorded format, the respondents' single most common explanation — given by one-fifth (21 percent) of the sample–was that they had wanted a tape for their car. In addition, 3 percent wanted a tape for their walkman-type player, while another 2 percent wanted to be able to play the recording on an unspecified type of tape player. In other words, over a quarter of the most recent copies of prerecorded music were made to play the recording on other playback equipment belonging to the taper (see table C7-1).

Making a tape to give to someone else was another common motive for taping. One in five tapers reported making the most recent tape to give to a friend (14 percent) or a family member (6 percent). By contrast, only a smaller proportion explained the most recent tape in terms of making a selection tape (6 percent) or saving money/avoiding purchase (6 percent).

This is not to say that economic concerns were not a factor in home taping. The majority of home tapers (57 percent) indicated that they could have purchased the same material, if they had so wanted. Of these, a majority (63 percent) said that the fact that taping was less expensive than purchasing was an important factor in their reason for making their most recent tape. When combining the proportion of tapers who could have bought the material with the proportion who considered saving money an important factor, the survey findings suggested that the fact that taping was less expensive than buying was important in about 36 percent of the most recent tapings (see tables C7-2 and C7-3). Naturally, answers to these questions did not prove the extent to which the opportunity to save money actually influenced respondents' behavior.

The most recent taping was selected as the most valid single measure of the nature of home taping. To gather additional information on consumer motivation, however, the survey asked respondents (aged 16 and over) who had taped from a prerecorded format in the past year whether they had ever made a tape for one of six reasons are listed in table C7-4. Those who had made a tape for one of these reasons were asked when they had last made a tape primarily for that reason. If the most recent occasion was within the past month, they were asked the number of times they had made a tape for that reason.

The most common reason for home taping from prerecorded formats in the past month, according to the sample of tapers, was to permit the taper to shift a recording he owned to other playback equipment. One-third of occasions reported in the past month (34 percent) was mainly to "make tapes of their own records, cassettes, and CDs so that they can play them in their car, Walkman, or elsewhere." This was consistent with the leading reasons given for the most recent taping.

Taping selections "to create their own customized program of music on tape," which was attributed by adults to comprise 23 percent of past-month tapings, emerges as the second most common factor in home tapes made by adults. A little less than one-fifth (18 percent) of the taping occasions in the past month are attributed by adult tapers to a desire "to protect the originals from damage and keep them from wearing out." By contrast, only 13 percent of music tapings by adults from prerecorded formats were attributed to making tapes of friends' recordings "so that they don't have to buy them" (see table C7-4).

COPYING AND THE RECORDED MUSIC MARKET

Sales Displacement of Home Taping

Exact measurement of the amount of prerecorded music sales displaced by home

taping was beyond the scope of this survey. However, the survey does provide an opportunity to explore the relative proportion of home tapings that might be displacing sales, compared with those that do not. Chapter 7 discusses the use of the survey data to develop a range of estimates of the extent to which homemade tapes displace sales.

The survey found that 57 percent of those who taped from a prerecorded format in the past year thought that they *could* have bought the material if they had wished (see table C7-2). There was no clear pattern by age, sex, race, or income for the willingness to purchase in the absence of taping. Presumably, then, the willingness to buy depended more on value to the individual of the particular item being taped (see tables C8-2, C8-3).

One factor in the value of the homemade tape to the taper appeared to be its intended end use. A majority of tapers who were making the tape for themselves (53 percent) said that they would have purchased the material if they could not tape. By contrast a minority of those making the tape for other household members (32 percent) or other persons (42 percent) said that they would be willing to purchase if they could not tape it. This suggests that taping for other people is a marginal activity for most tapers.

Those who would not buy, even if they could not make a tape, were asked why they would not purchase the material. Three answers were given by two-thirds of this group. First, 29 percent of nonbuyers said that they already had a copy of the material – they did not need another copy. For these, the tape appeared to have been a convenience, an extra copy for protection or use elsewhere, but not worth paying for. Second, 23 percent said that they could not afford to buy it. Another 19 percent said they would not buy the recording because they did not like it enough or were not interested enough to pay for it.

As mentioned earlier, 57 percent of those who taped from a prerecorded format in the past year thought that they could have bought the material if they had wished. Of those, about half (49 percent) said that they would have bought it, if they had been unable to tape (see table C8-2). In 77 percent of cases in which the taper could have purchased, the taper said that if he had bought the recording, it would have been in addition to other recordings purchased, rather than in place of them (see table C8-5). With these three sample proportions combined, (0.57 x 0.49 x 0.77), the survey data would suggest that about one-fifth (22 percent) of the most recent tapings from prerecorded formats displaced sales of prerecorded music that might have otherwise been made, if the respondent could not tape; however this estimate may be excessively high.

It is important to note the perils of using hypothetical questions (such as “Would you have purchased that item if you were unable to tape?” or “Would it have been in addition to other recordings you have purchased?”) in surveys. Typical marketing research experience is that only about half (or even fewer) of the people who answer affirmatively to hypothetical questions actually engage in the behavior being studied.[27] Thus, any undiscounted estimate of displacement based on a series of questions like these should be considered an upper bound.

Such an analysis based on hypothetical questions (and a small portion of the sample population) was only meant to be suggestive and to give an upper bound to possible consumer behavior. If the analysis was correct, a sales displacement rate of possibly 22 percent, but probably much lower, could be projected

[27] See SRBI report, op. cit., footnote 14, pp. *102-103,* for a discussion of the use of hypothetical questions.

for record industry sales. On the other hand, this rate also suggested that if people were unable to make tapes, over three-fourths of the tapes that would have been made would not be replaced by sales of prerecorded music.

Stimulative Effects of Taping

Some have argued that home taping may stimulate sales of prerecorded music, even if it displaces some sales. The accurate measurement of sales stimulation in a retrospective interview was even more difficult than the estimate of sales displacement. The survey did suggest the likelihood of a stimulative influence of home taping on music purchases, but the data did not support a quantitative estimate of its magnitude.

Home tapes may broaden audience awareness of performers and recordings in the marketplace. Hearing a piece of music or a performer on a homemade tape may not "cause" a person to make a purchase, but the home tape must be considered to have some promotional value. Approximately one-quarter (24 percent) of past-year purchasers reported that they had heard the recording or performer of the recording that they most recently purchased on a tape made by themselves or someone else before their purchase (see table C8-11,).

The audience reach of homemade tapes is clearly not that of either radio or prerecorded music formats. Nonetheless, more recent purchasers reported having heard the performer or recording that they most recently purchased on homemade tapes than in concert (21 percent). It is also important to note that having heard the performer or recording on homemade tape did not discourage subsequent purchase in these cases (see table C8-11).

A second possible stimulative effect of home taping was related to purchasers' intent to tape when they bought records, tapes, or CDs. Those who had purchased a recording in the past year were asked whether they had expected to tape from his most recent purchase, at the time they bought it. One out of seven past year buyers (14 percent) said that at the time of their most recent purchase of a record, tape, or CD, he expected to tape from the recording he purchased (see table C8-13).

Survey findings point to an interesting relationship between the purchase of recorded music with an expectation of taping and the format of the material purchased. Although prerecorded cassettes are the most frequently purchased, only 8 percent of those buying a cassette on their most recent purchase bought with the expectation of copying it. By comparison, 16 percent of those who bought a CD report that they bought the CD with the intention of copying it. Most dramatically, over a third (35 percent) of those who purchased a record on their most recent buying occasion bought the record with the expectation of copying from it (see table C8- 13). This is consistent with earlier findings that records are the most common format from which music is taped.

How many persons have actually taped from their most recent purchase? The survey found that among past-year purchasers, about 1 in 10 (11 percent) had made a tape from his most recent purchase by the time of the interview (see table C8-14). It is notable that fewer purchasers had actually made a tape (11 percent) than had intended to make a tape when they bought the recording (14 percent). When cross-tabulating purchase intent with actual taping, the survey found only half (51 percent) of those who intended to tape their most recent purchase had taped it by the time of the interview. By contrast, only 4 percent of those who had not expected to tape from their most recent purchase reported that they had taped from it by the time of the survey.

Recording of Noncopyrighted Material

It should not be assumed that taping music from broadcasts or prerecorded formats is the main or only use of home audio recording technology. The survey found that 62 percent of respondents who had used tape recorders in the past year had taped material other than prerecorded music. This figure translated into 32 percent of the entire sample of persons aged 10 and older who used tape recorders to record noncopyrighted material, such as family members' voices, reports, dictations, and messages (see table C9-1.) As with the recording of prerecorded music, younger people were most likely to use an audio recorder to record noncopyrighted material.

In comparing the number of reported occasions of taping music and taping noncopyrighted material, the survey findings suggested that nearly three in four (73 percent) of taping occasions in the past month involved taping things other than prerecorded music. In other words, in three out of four times a tape recorder was used in American households in the past year, it was used to tape voices, messages, music played by the respondent, and other material (see tables C9-3, C9-4, and C9-9).



Photo Credit Office of Technology Assessment

Some tapes are of family members' voices.

While the survey suggested that home audio recorders were used more frequently to tape material other than prerecorded music, this did not mean that most homemade tapes contained noncopyrighted material. The nature of the two types of recording is considerably different because recordings of noncopyrighted material vary widely in length and type. The most dramatic example is the recording and rerecording of a telephone answering machine message. This survey did not attempt to measure the amount of space in homemade audiotapes that contained prerecorded music as opposed to noncopyrighted material.

The survey did suggest that people make little discrimination in the grade of blank tapes they used. Only about a quarter (23 percent) of those making tapes of noncopyrighted material and about a third (32 percent) of music tapers knew what grade of audiotape they used to make their most recent recording. Among those who did know what kind of tape they were using, a somewhat higher proportion of those taping noncopyrighted material (38 percent), compared with music tapers (27 percent), reported using a normal bias grade of blank tape.

Taping Technology and the Home-Tape Inventory

The survey documented the presence of multiple tape player/recorders in most households, but did not determine the purpose for

which they were bought. Moreover, many households had one or more recorders with dual-cassette and speed-dubbing functions, which facilitate the copying of prerecorded music.

The survey found relatively little relationship between the presence of a dual-cassette recorder in the household and the number of home audiotapes made by the respondent. Among those who owned no audiotapes made by themselves, nearly a quarter [24 percent) had cassette recorders with dual-cassette drives. The availability of advanced copying features did not appear sufficient to generate home taping among those who owned them (see table C10-6).

The amount of homemade audiotapes that the respondent owned did not seem to be related to the presence or absence of a dual-cassette recorder. The incidence of dual-cassette recorders was basically the same — about half-for those reporting 1 to 10 homemade tapes in their collection (51 percent), 11 to 25 tapes (50 percent), and 26 to 50 tapes (48 percent). Of those with over 100 homemade tapes, 65 percent had dual cassettes, and those with 51 to 100 tapes had a rather low 42 percent (see table C10-6).

A similar pattern was found between the number of homemade audiotapes in a respondent's collection and equipment with fast-dubbing features. Restricting the analysis to those persons with dual-cassette recorders, the survey found that the proportion of persons with dual recorders included 59 percent of those who have no homemade tapes at all. More important, the rate of fast-dubbing capability increased from 62 percent for those with 1 to 10 homemade tapes to 84 percent for those with 100 or more. The proportion with fast dubbing did increase among heavy tapers, but not dramatically (see table C10-7).

The data suggested that the technology of fast dubbing and dual cassettes did not seem to be driving home taping. Rather, their distribution looked more like an incidental result of the number (and possible recency) of tape player/recorders in the household. This suggested that playback technology, rather than copying technology, has driven home taping.

HOME VIDEOTAPING

The survey attempted to determine whether the behaviors studied in some detail in the area of music taping were similar to the general pattern of other forms of home taping, specifically videotaping.

The videocassette recorder (VCR) was the second most prevalent form of consumer recording technology. While 94 percent of the sample population had audiocassette decks, 69 percent had one or more working videocassette decks. Thus, more than two-thirds of the population had the ability to record video programming from broadcast or cable television. Indeed, a majority (59 percent) of VCR owners reported recording one or more programs from television in the past month. More than a quarter of VCR owners (28 percent) reported five or more taping occasions in the past month, that is, more than once a week on average.

The survey findings suggested that the majority of programs taped from television were movies, sporting events, and soap operas, with relatively fewer prime-time network programs. The majority of those taping television programs (62 percent) reported that their most recently made videotape was made to be used only temporarily, rather than to keep. The nature of the programming appeared to have a major impact on the permanence of the recording. Most of those taping sporting events, comedy or drama series, or talk shows made the tapes for temporary use. But substantial portions of those taping concerts, music videos, movies, mini-series, documentaries, cartoons, and educational programs made the tapes to keep (see tables C12-10 and C12-11.)

Videotape Copying

Although television taping was common among VCR owners, copying videotapes was not. Only one in five VCR owners who had acquired a videotape in the past year (20 percent) reported ever having copied a videotape, either prerecorded or home recorded. The proportion of VCR owners who had copied a tape in the past year was only about 1 in 10 (12 percent) (see table C12-12). Tape copies accounted for only 2 percent of the most recently acquired videotapes, compared with 23 percent of those that were purchased by the respondent, and 54 percent recorded from television (see table C12-8).

Unlike the copying of prerecorded audio formats, only a minority of the videotapes that were copied belonged to the respondent or his family. Nearly a quarter (23 percent) of the most recently copied videotapes were obtained from a video club or store. The bulk (42 percent) of originals, however, were obtained from friends. The survey suggested a modest level of exchanging videotapes among friends to make copies, as well as copying videotapes for friends. When asked whether they could have purchased the videotape they copied if they had wanted to, a little over one-third (35 percent) thought that they could have bought the tape, while 57 percent thought that they could not have, and 8 percent were not sure (see table C12-19). Of respondents who made a videotape copy in the past year, 70 percent reported that they made the copy with the intention of keeping it.

Comparison of Video- and Audiotaping Behaviors

While the pattern of television home recording in general was consistent with the time-shifting explanation, this applied to very little of radio recording. Most videotapes from television were made for temporary use – that is, to be viewed once, or a few times, at the convenience of the owner. The survey data showed a clear difference in the proportion of tapes made with the intention of permanent recording from radio (69 percent) and television (35 percent). This difference may have reflected the proportion of programming in the two media that had permanent value to the consumer. As noted above (tables C12-10 and C12-11), a higher proportion of *music* programs were made to keep (80 percent). Thus, videotaping of concerts, and musical entertainment seemed to be more similar to the pattern of audiotaping.

One goal of the survey was to determine whether there was convergence between the populations of audiotape copiers and videotape copiers. Table C12-21 shows the responses of music tapers (who had acquired a videotape in the past year) to the question, "Have you ever copied a videotape?" The survey found some relationship between persons who copied videotapes and those who copied prerecorded music. As noted earlier, 20 percent of the sample population (17 and older) who had acquired a tape within the past year reported having ever copied a videotape. As shown in the table, higher proportions of respondents who tape from prerecorded formats (30 percent) and from both radio and prerecorded formats (39 percent) reported having copied a videotape.

Despite the survey evidence of increased likelihood of videotape copying among those who audiotape, this tendency was limited. Note that among those who had taped music both radio and from prerecorded formats in the past year, 60 percent had never copied a videotape. By contrast, the 12 percent of nonmusic tapers who had made a videotape represented over onethird (35 percent) of all videotape copiers.

Analyzing the most recent videotape acquisition tended to confirm this pattern. The proportion of most recently acquired videotapes that were recorded from television was somewhat higher among those who had audiotaped

music in the past year (59-68 percent) than among those who had not (49 percent). Given the greater number of nonmusic tapers, however, the survey found that the majority of those whose most recent videotape acquisition was recorded from television had done no music audiotaping in the past year. There seemed to be little difference between music tapers and others in terms of the proportion of copied tapes (see table C12-22).

Hence, the survey findings suggested that home video copying and home audio copying were not done by the same people, for the same reasons, under the same conditions. There was some overlap between the two behaviors, but they were substantially different.

PUBLIC ATTITUDES

Attitudes Toward Taping

The survey found that most members of the public considered themselves to be unfamiliar with copyright law, but they nevertheless had clear-cut ideas about the acceptability of home taping. The majority of the public (76 percent) considered itself only slightly or not at all informed about copyright laws and their application to home taping (see table C11-1). The survey did show a relationship between taping and familiarity with copyright law. A higher proportion of past-year tapers (32 percent) than nontapers (20 percent) considered themselves extremely or quite familiar with the law. Perceived familiarity with copyright law did not reduce the likelihood of home taping, nor did lack of familiarity with the law increase it.

To learn what kind of norms existed in the area of home taping, survey respondents were asked to classify certain behaviors on a 7-point scale of personal acceptability. A score of 7 meant that the action was perfectly acceptable. A score of one meant that it was not at all acceptable. The specific wording of the question appears in table C11-2.

When asked about the acceptability of making a taped copy "for your own use of a record, tape, or CD that you own," a majority (57 percent) gave a score of 7 – perfectly acceptable. Moreover, 75 percent of respondents ranked this behavior on the acceptable side of the scale (i.e., 5 to 7). Only 11 percent of the public ranked copying of records, cassettes or CDs now owned for his own use on the unacceptable side of the scale (see table 11-2).

The public acceptability of many forms of home music taping was even more clearly seen in considering situations in which the owner of the original materials did not retain the copies of the prerecorded music. When asked how acceptable they considered "making a taped copy to give to a friend of a record, cassette, or CD that you own," a majority of the sample (63 percent) rated the behavior as acceptable (i.e., 5 to 7 on the scale), while 40 percent rated it perfectly acceptable. Responses concerning the acceptability of taping borrowed materials were virtually identical, and it apparently did not matter to respondents whether the taper was copying whole albums or selections (see table C11-2).

The only form of taping that the survey found unacceptable to the public, among the five general types explored, was taping for gain. When asked about the acceptability of "making a taped copy to sell of a record, cassette, or CD that you own," three-quarters (76 percent) of the respondents rated it as not acceptable (1 to 3 on the scale); indeed, two-thirds (67 percent) found it not at all acceptable.

There were differences in the overall rating of the acceptability of the various forms of taping behavior that depended on the respondent's taping behavior. The average acceptability rating of each of the five actions tested was a full point higher among respondents who had made tapes in the past year than it was for persons who had made no music tapes. Nevertheless, among nontapers the average acceptability rating of taping one's own

originals for personal use was 5.6 — on the acceptable side of the range. Behaviors of making copies of borrowed materials or giving copies to others was viewed by the nontaper as being on the edge of the acceptable range (4.6 to 4.8). Only taping to sell was rated as unacceptable by nontapers (see table C11-3).

It is also instructive to note the attitudes of those who purchase prerecorded music within the past year. They considered all of the copying situations described, except for taping to sell, as acceptable forms of behavior. Those who were more critical of music copying were respondents who had not bought any recorded music in the past year.

These survey findings clearly showed an underlying set of social norms that were supportive of home taping of music. They appeared to reflect a set of feelings about the rights of ownership. There seemed to be agreement among the public that a person who purchased a recording had the right to make copies for his own, or a friend's use. The public did, however, draw the line at using home taping for profit, i.e., making copies to sell. This survey finding paralleled qualitative findings from focused group discussions in which tapers and nontapers agreed that taping "to save money" was acceptable, but taping "to make money" was wrong.

Fairness of Taping

Respondents were also asked their opinion concerning the fairness of the present situation for each of three affected parties— the recording industry, song writers and performers, and the average consumer. The specific question appears in table C11-5.

There did not seem to be a consensus about the fairness of home taping to any of the affected parties. Slightly more of the respondents felt that current practices were fair to the artists and industry than felt that they were unfair, but nearly a quarter had no opinion. Indeed, nearly a quarter had no opinion on the fairness of current practices to the average consumer. As might be expected, tapers tended to see the current practices of home taping as fairer to everyone than did the nontapers. Similarly, buyers of recorded music tended to see the current situation as fairer than did nonbuyers. No one, however, seemed to see fairness as a clear enough issue to come down on one side or the other for any of the parties.

Attitudes Toward Policy Changes

A number of alternatives have been proposed for either discouraging home copying of prerecorded music or compensating copyright holders. To gauge public opinion concerning a range of alternative directions for dealing with home taping, the adult (17 or older) members of the sample were asked: "Now using the same scale running from one, meaning not at all fair, to 7, meaning perfectly fair, I'd like to know how fair each of the following suggestions would be, or don't you have an opinion?"

A majority of the survey respondents considered the alternatives of limiting recording technology as unfair. A majority (56 percent) considered the suggestion that "new audio recorders should be built so they can't copy commercial recordings" as being in the unfair range (i.e., 1 to 3) with 42 percent rating the option as not at all fair. Similarly 55 percent found it unfair that "audio recordings should be made so they can't be copied." This included 41 percent who considered the approach not at all fair (see table C11-8).

The suggestion of compensating copyright holders for losses due to home taping through new fees on products also met with disapproval from a majority of the respondents. Fifty-seven percent considered it unfair that "a fee should be charged on audio recorders and paid to copyright holders to compensate

them for home taping." Once again, 42 percent considered this approach as not at all fair (see table C11-8).

The suggestion that "a fee should be charged on blank audiotapes and paid to copyright holders to compensate them for home taping" also met with majority disapproval. Nearly 6 in 10 (59 percent) of the sample of adults considered this suggestion unfair, with 48 percent considering a fee on blank tapes not at all fair.

The majority of the respondents thought it fair that "current home taping practices should be left unchanged." The survey found that 63 percent of the national sample of adults rated this approach as fair, with 46 percent rating it as perfectly fair.

It is noteworthy that none of the alternative approaches of limiting recording technology or imposing new fees seemed to have an identifiable constituency among the public. In general, tapers, purchasers of prerecorded products, and nontapers seemed to feel that it was fair to leave current home taping practices unchanged (see table C11-9).

Chapter 7

Economic Perspectives on Home Copying

CONTENTS

Page

INTRODUCTION 169
STAKEHOLDER STUDIES 170
Points of Contention 172
LITERATURE ON HOME COPYING 176
The Effect of Private Copying on Welfare 176
Appropriability and Pricing 178
Price Discrimination, Resource Allocation, and Variety 179
ANALYZING THE ECONOMIC EFFECTS OF HOME COPYING 180
Home Copying and Its Economic Effects 180
Home Copying and the Demand for Originals 184
Consumer Welfare and Audio Home-Copying Restrictions 191

Figures

Figure — Page

7-1. Overview of the Audio Format Decisionmaking Process 193

Tables

Table — *Page*

7-1. Variable Description and Statistics 188
7-2. Tobit Estimates of Original Purchases 189
7-3. Three-Stage Least Squares Estimates of Original Purchases 189
7-4. Tobit Estimates of Taping Behavior 190
7-5. Three-Stage Least Squares Estimates of Taping Behavior 190
7-6. Sample Summary Statistics 196
7-7. Multinominal Logit Estimation Results for Individuals Not Having a CD Player in Home or Car 197
7-8. Multinominal Logit Estimation Results for Individuals Having a CD Player in Home or Car 197
7-9. Choice-Probability Elasticity Estimates for Individuals Not Having a CD Player in Home or Car 199
7-10. Choic-Probability Elasticity Estimates for Individuals Having a CD Player in Home or Car 199
7-11. Hypothetical Changes Absent Home Music Taping (All Sources) - Short Term Only 202
7-12. Hypothetical Changes Absent Home Music Taping From Prerecorded Sources - Short Term Only 204

Chapter 7
Economic Perspectives on Home Copying

INTRODUCTION

Economic harm-the "effect of the use upon the potential market for or value of the copyrighted work" — is one of four criteria considered by the courts in determining whether a use is a "fair use)' and not a copyright infringement.[1] Consequently, much of the debate on home copying of audio and video materials has focused on economic analyses supporting or rebutting copyright owners') claims of economic harms. Because home copying is a private use, applying the fair-use defense may be premature.[2] Some, nevertheless, do believe that the doctrine of fair use, as the "safety valve" of the copyright law, is able to deal with home copying and other private uses.[3]

New technologies and new private uses convey benefits as well as harms to various classes of right holders and users. These affect society's economic welfare. Choosing an appropriate balance of harms and benefits is a political decision, not a technical one, in which the public has a stake.

Defining the legal status of private uses (like home copying) will involve weighing the effects on stakeholders of possible measures to restrict private uses against the consequences of not restricting them. Narrowly defining the legal status of a particular kind of home use (e.g., making digital copies of prerecorded music) would not resolve parallel issues for other technologies and industries.

This chapter explores the economic implications of home audiotaping and home copying in general. To do this, OTA commissioned Michael Katz, William Johnson, and Fred Mannering to conduct three independent economic analyses and analyzed several other studies performed by industry groups and private individuals.

All three of the economic analyses done for OTA illustrate a common theme: In considering whether—or how— to adapt the law or technology to address home copying, it is as important to identify the ambiguous consequences of any proposed change as it is to quantify the more certain ones. Katz develops a theoretical framework for analyzing the economic effects of home copying, and shows how the possible effects on various stakeholders depend critically on the underlying assumptions about supply and demand. Johnson develops a theoretical framework for analyzing the effects of home copying on the producers of original recordings and uses the OTA survey data to examine some factors that influence copying and purchasing behaviors. Mannering develops a model of consumers' choice between purchasing and taping music and uses the OTA survey data to estimate the value consumers place on homemade tapes.

Mannering's estimate of consumers' valuation of homemade tapes is used to estimate the hypothetical economic effects on consumers and society from eliminating home taping.

---

[1] Title 17, U.S. Code, Sections 107 (1)-(4).

[2] See ch. 3, and also: U.S. Congress, Office of Technology Assessment, *Intellectual Property Rights in an Age of Electronics and Information*, OTA-CIT-302 (Melbourne, FL: Kreiger Publishing CO., April 1986), pp. 193-198. The 1986 OTA report concluded that new informationdissemi nation and reproduction technologies pose a number of legal challenges. One, the "problem of private use, " sterns from growing home access to copyrighted electronic information, coupled with inexpensive copying and transmission. The legal problem arises because these technological changes raise the question of how far copyright proprietors' rights should extend over private uses, and the copyright legislation provides meager guidance.

[3] Alleged harm is still relevant t. th, debate. I, considering whether copyright proprietors' exclusive rights should extend over private uses, Congress might wish to take the economic consequences of private uses into account.

While a ban on home taping is extreme, this scenario allows the effects of home taping on recording-industry revenues to be estimated in a manner comparable to earlier recording-industry studies, along with effects on blank-tape revenues, consumer benefits, and society's economic welfare.

The effects of private use, including home copying, on the efficient allocation of resources and society's economic welfare are complex and ambiguous. Even for one specific type of copying-home audiotaping–using survey data to estimate its effects on industry revenues or consumer benefits involves many assumptions and approximations. Choosing among assumptions about underlying factors is a subjective process. Some of the most crucial factors are very difficult to measure and several alternative assumptions may be equally plausible— for example, the extent to which consumers would increase purchases of recorded music, absent home taping. Thus, the same survey data can support disparate estimates, and this type of uncertainty is unlikely to be reduced by more data.

STAKEHOLDER STUDIES

By 1986, industry stakeholders-both individual firms and industry associations — had sponsored almost a dozen surveys and studies, usually to support or oppose passage of home-copying legislation.[4] Most were intended to show the alleged harm or losses that the sponsors incurred as a result of home copying.[5] In the 1986 study, OTA noted discrepancies among these analyses, each of which used different methodologies, and which often focused on a specific product or market. More important, OTA noted:

> "...[A] consideration of the beneficial effects of new technological uses to either new or existing markets for intellectual property is often absent from such estimates. Although the videocassette recorder [for example] may give rise to copying, it also permits the exploitation of markets that would otherwise not exist. Both factors must be taken into account in considering harm. The policy maker is therefore still left with a decision over who will benefit from new technological uses, and for what reasons. "[6]

Several of these analyses of alleged harm to the recording industry due to home taping were presented and debated during hearings on copyright and home taping in the 97th,[7] 98th,[8] and 99th[9] Congresses. At each hearing, Alan Greenspan presented the results of the most recent analysis done for the recording industry by his firm, Townsend & Greenspan. In the 1985 analysis, sponsored by RIAA,

---

[4] **See table & 1** in ch. **6** of **this report** and OTA-CIT-302, **op. cit., footnote 2,** pp. 201-203, for summaries of these.

[5] There has been substantial disagreement as to whether harm should be used to determine rights, and where the burden of proof should lie.

[6] OTA-CIT-302, op. cit., footnote 2, p. 201.

[7] "Copyright Infringements (Audio and Video Recorders)," Hearings before the Committee on the Judiciary, U. S. Senate, 97th Cong., 1st and 2nd sess., on S. 1758 (A Bill to Amend Title 17 of the U.S. Code to Exempt the Private Noncommercial Recording of Copyrighted Works on Video Recorders From Copyright Infringement), Nov. 30, 1981 and Apr. 21, 1982, pp. 917-971.

[8] "Video and Audio Home Taping," Hearing before the Subcommittee on Patents, Copyrights, and Trademarks of the Committee on the Judiciary, U. S. Senate, 98th Cong., 2nd sess., on S.31 (A Bill to Amend Title 17 of the U.S. Code With Respect to Home Recording and Video and Audio Recording Devices and Media, and for Other Purposes) and S. 175 (A Bill to Amend Title 17 of the U.S. Code to Exempt the Private Noncommercial Recording of Copyrighted Works on Video Recorders from Copyright Infringement), Oct. 25, 1983, pp. 107-244.

[9] "Home Audio Recording Act," Hearings before the Committee on the Judiciary, U. S. Senate, and its Subcommittee on Patents, Copyrights, and Trademarks, 99th Cong., 1st and 2nd sess., Hearings on S. 1739 (A Bill to Amend Title 17 of the U.S. Code With Respect to Home Audio Recording and Audio Recording Devices and Media, and for Other Purposes), Oct. 30, 1985, Mar. 25 and Aug. 4, 1986, pp. 146-176.

Greenspan estimated that in 1984, each instance of home taping cost the taper $1.67 per album-equivalent, compared with an average retail price of $6.80.10 On the basis of an earlier report on home taping by the firm Audits & Surveys, Townsend& Greenspan estimated that 42 percent of all home tapings from prerecorded material and 40 percent of off-the-air (broadcast) tapings would have generated sales, if taping had not been possible.11 Then, assuming that 40 percent of home taping in 1984 was in lieu of purchases of records or prerecorded cassettes, the firm estimated 1984 retail losses of some $1.5 billion. This figure included $200 million in losses due to record prices being depressed 5 percent below what they would have been, absent taping.[12] Greenspan estimated that about 40 percent of these retail losses (about $600 million) represented *compensable* losses to copyright owners and creators; this proportion was based on estimated lost revenues (net of manufacturing and distribution costs) using a hypothetical industry income statement. Moreover, as in his earlier testimonies, he stated that continued home taping had grave implications for the viability of the recording industry. Noting that recording-industry releases were down by almost half since 1979, and that industry employment had declined from 29,000 in the late 1970s to less than 19)000 in 1984, Greenspan stated that further growth in home taping would cause further decline in these industry indicators. He concluded that the industry itself could not successfully respond to home taping with a pricing strategy. Raising prices to recoup losses would reduce sales and might increase home taping, and lowering prices to make taping less attractive would cut profits further and decrease the industry's capabilities to take the risks required by the nature of the business.[13]

Greenspan's two earlier studies had estimated losses to the recording industry amounting to $1.05 billion for 1981 and $1.4 billion for 1982. The Consumer Electronics Group of the Electronic Industries Association (EIA), the Audio Recording Rights Coalition, and the Home Recording Rights Coalition (HRRC) submitted dissenting comments and testimony disputing these estimates. In the first instance, EIA argued that taping estimates based on hypothetical questions and recall were unreliable and exaggerated the amount of taping actually done. Furthermore, EIA claimed that the analysis

---

[10]In this calculation, a blank tape was assumed to hold 1.875 album-equivalents.

[11]"Home Taping in America 1983: Extent and Impact," Audits& Surveys (New York, NY: October 1983). The report was based on diaries of taping activity over a l-month period from a sample of active tapers, as well as personal interviews and an in-home audit, of all tapes in the respondents' homes.

Earlier estimates of taping and displaced sales had been based on a consumer mail survey sponsored by Warner Corn munications, Inc. (WCI): M. Fishbein, S. Middlestadt, and M. Kapp, "AConsumer Survey: Home Taping," WCI (March 1982), as reported in " 1981 Estimate of Less Due to Taping: Tapers' Reports of Replacement (Executive Summary)," (Los Angeles, CA. WCI, April 1982).

[12]Greenspan calculated that the average annual price increase of all goods and services in the consumer price index was6.7percent from 1978-1984, while average prices of prerecorded tapes rose only 2.2 percent. According to Greenspan, "Had average prerecorded tape prices paralleled the general rise in consumer prices in 1984, they would have been 29 percent higher than they in fact turned out to be. "

In general, failure of retail prices to match increases in the consumer price index does not always mean a decline in profit margins. Also, macroeconomic conditions (such as the recession during 1979-1981) can have a different effect on demand for entertainment (e.g., records and tapes) than on other items in the price index (e.g., food).

Greenspan also concluded that the recording industry's recovery since the early 1980s did not indicate that the "taping problem" had eased; rather, his analysis indicated that taping had reduced pretax profits, even during the recovery. Green span estimated that the proposed home-taping levy in S. 1739 would yield some $200 million per year. See Hearings on S, 1739, op. cit., footnote 9, pp. 154-156,

[13]Hearings on S. 1739, op. cit., footnote 9, pp.155-56.

for RIAA had ignored the stimulative effects of home taping on sales of recordings, and that some home tapes (e.g., selection tapes and tapes made for portable or car tape players) are not substitutes for prerecorded products.[14] In the second instance, Greenspan's estimate of harm was rebutted by a panel representing HRRC and the Audio Recording Rights Coalition. The panel argued that the Audits & Surveys data used by Townsend & Greenspan were flawed and overstated the potential for sales displacement, and that the analysis ignored the stimulative effects of taping on sales and other benefits.[15]

HRRC and EIA contended that the new Townsend & Greenspan analysis of alleged harm for 1984 was subject to the same flaws as the earlier ones. They did not, however, offer any new empirical estimates.

Points of Contention

A pattern emerges in these debates. The published recording industry arguments and economic analyses deal *only* with estimates of alleged harms to the recording industry and copyright proprietors that arise from substituting home copying for purchases of prerecorded music. These alleged harms include lost sales, depressed prices, lower profit margins, and, ultimately, a decline in the number and diversity of new recordings being released. Survey data and models are used to estimate the extent of copying and the number of displaced sales. Representatives of the hardware and blank-tape industries then dispute the results on methodological grounds.

Although representatives of the hardware and blank-tape industries argue that the recording industry's figures are inflated, they have not published their own estimates of either economic harm or tangible/intangible benefits from home copying. Instead, they contend that when the effects on the recording industry and on consumers are considered together, there are net economic benefits to society. They argue that economic analyses used for policymaking must examine the costs and benefits to the various stakeholders.[16] Their arguments propose several hypotheses about social (and recording industry) benefits from home taping. Because these hypotheses are not quantified, they cannot be compared with the recording industry's estimates of economic harm.

As an example of these lines of argument, one remedy proposed by the recording industry, songwriters, and music publishers is a surcharge on the price of a blank audiotape.[17] The rationale for this hinges on the assumptions that:

- home taping is a direct *substitute* for a purchase,
- most blank tapes sold to consumers are used to copy copyrighted material, and therefore

[14] Hearings on S. 1758, op. cit., footnote 7, pp. 956-970.

[15] Hearings on S.31 and S.175, op. cit., footnote 8, pp. 340-467. The Audits & Surveys study for RIAA concluded that hearing home tapes was an almost negligible factor in decisions to purchase (Audits & Surveys, op. cit., footnote 11, pp. 14-15).

[16] Cited examples include, for example, economic harm to the recording industry from lost sales *and* benefits to the recording industry from technological innovations in hardware that open new markets, benefits to consumers from a wider set of choices and lower-cost access to music, etc. (Hearings on S. 1785, op. cit., footnote 7; Hearings on S.31 and S. 175, op. cit., footnote 8.)

[17] See "Joint Statement of the Music Publishers' Association, Inc., Recording Industry Association of America, Inc., and songwriters Guild of America Re: S. 1739, The Home Audio Recording Act," testimony before the Subcommittee on Patents, Copyrights, and Trademarks of the Senate Committee on the Judiciary, Oct. 30, 1985, pp. 49-62.

> . the surcharge would fairly compensate copyright holders for lost royalties.[18]

In arguing the fairness of blank-tape surcharges, proponents claim that most consumers tape to save money and that they would have purchased a recording if they were unable to copy.

In opposing such proposals, HRRC and EIA contend that home taping does not compete directly in the market for prerecorded music.[19] They argue that consumers do *not* regard homemade tapes as perfect substitutes for prerecorded products: tapes can be reused, so home tapes may not be permanent additions to a consumer's music library. In addition, they contend that consumers' taping practices are such that the content of home tapes differs from what is commercially available and that consumers often tape material that they would not have purchased. They also contend that home taping can stimulate demand for prerecorded products. Asserting that it is not prohibited under current law, they point out that home taping offers significant intangible benefits to consumers by diversifying the choices available to them via "selection-taping," as well as the settings and forms in which they can enjoy music via "place-shifting." "Selection-taping" is making a tape with selections from one or more different artists or albums; "place-shifting" is making a tape of an owned recording to play in a car or portable tape deck. HRRC and EIA suggest that consumers base their decision to purchase some recordings on the expectation that they can be copied for these purposes and that consumers are unlikely to purchase copies of the same recording on different media (e.g., a CD or record for home use and a tape for the car). RIAA, on the other hand, disagrees with these arguments. It views home-taping practices such as "place-shifting" as violations of copyright or, at best, of uncertain legal status, but certainly not condoned under the current law.[20]

One area of continuing disagreement is whether only the effects of home taping (or a taping ban) on recording-industry revenues should be considered for policy formulation, or whether effects on blank-tape revenues and consumers' economic welfare should also be considered. A corollary to this disagreement is whether alleged *lost revenues* or *lost profits and royalties* should be used in considering "harm."

Viewing home taping as a violation of current copyright law, RIAA believes the absolute protection of copyrighted music and recordings to be the only relevant issue. Therefore, RIAA maintains that policymakers should only take into account the effect on record industry revenues, reflected in

---

[18] Some variants of this argument involve tape qualities and likelihoods of taping copyrighted material% given tape type.

For a discussion of the relative merits of blank tape and/or recording equipment fees and criteria for determining them, see: Timothy J. Brennan, "An Economic Look at Taxing Home Audio Taping," *Journal of Broadcasting & Electronic Media*, *vol.* 32, Winter 1988, pp. 89-103.

[19] In 1982, the Audio Recording Rights Coalition sponsored a telephone survey of audio tapers, intended to explore the tastes and practices of tapers (including the stimulative effect of home taping on purchases), but not to estimate the absolute amount of home taping in the United States: "Why Americans Tape: A Survey of Home Taping in the United States," Yankelovich, Skelly, and White, Inc., September 1982. Yankelovich, Skelly, and White reported the following results: (1) more than half of all home audiotaping does not involve prerecorded music; (2) home taping stimulates purchases of prerecorded music; (3) home tapers tape primarily to put together their own program of selections; (4) tapers also seek portability, convenience, quality, and availability t hrough home taping, (5) saving money is not the primary motive behind home music taping; and (6) half of all home tapes of prerecorded music are made from the taper's own record or tapes.

[20] H. Rosen, Recording Industry Association of America, Inc., letter to J. Winston, OTA, May 2, 1989 (enclosure with comments on draft ch. 8, p. 2).

sales displacement.[21] Advocates of home recording such as HRRC and EIA consider that home taping is legitimate under the current law. Furthermore, they hold that studies of the effect of taping on the recording industry should consider only the effects on industry profits and royalty payments to performing artists and creators of works, rather than gross revenues to recording companies. They argue that the former incentives determine the long-term supply of new works.[22]

The difference in relative magnitudes (gross revenues versus profits and royalties) is substantial. Greenspan estimated that 40 percent of alleged lost revenues represented "compensable" losses to copyright owners and creators (including the recording companies). Considering the recording industry's rule-of-thumb that royalty payments to the performing artists and copyright owners amount to about 20 percent of the wholesale price of a recording (see ch. 4), the 40-percent-of-revenues figure for profits and royalties seems high.

Some of the major unresolved questions from previous surveys and analyses stem from their underlying assumptions, as well as from the survey designs. For example, the RIAA surveys examined *homemade tapes,* while the HRRC survey examined *home-taping incidents* ('Tapings"), so the results are not comparable. One important line of argument has concerned the efficacy of proposed levies in furthering the intent of copyright by providing incentives for the creation and dissemination of new works. Other differences have been methodological, concerning the construction of:

. Measures of the amount of blank media of various qualities purchased by consumers, and estimates of the proportion used for home taping of copyrighted material (as opposed to other uses such as in answering machines or to tape a baby's first words).

- Measures of motivations for home taping, intended to test hypotheses as to whether home tapes displace or stimulate purchases.
- Measures of the amount of home taping being done and of taping patterns (e.g., selection-taping versus album taping, taping owned versus borrowed recordings, etc.).
- Measures of the extent to which taping stimulates purchases, or of estimated lost sales revenues from taping displacing purchases.

OTA **concludes that the studies by the RIAA and EIA/HRRC are insufficient as a basis for policy making, for the following reasons:**

- The methodologies and data for the surveys that were used as the basis for the studies were not published in their entirety, including details of the survey design and response rates, complete questionnaires, and disaggregate responses to all the questions asked. Therefore, independent replication of results and/or alternative analyses by disinterested parties are not possible. Because the studies were sponsored by those with a financial interest in their outcome, questions of bias in their design, execution, or reporting arise; the inability to independently replicate results leaves these questions open.

[21] H. Rosen, Recording Industry Association of America, Inc., letter to OTA, May 2, 1989 (enclosure with comments on draft ch. 8, pp. 1-2).

[22] Gary J. Shapiro, Robert S. Schwartz, Steven R. Brenner, Home Recording Rights Coalition, memorandum to OTA with comments on economic issues, May 1, 1989, pp. 7-10.

- The survey data obtained for RIAA and HRRC are based on different units of analysis (tapes and tapings, respectively), in part because the analyses based on these data were intended to explore different mechanisms (e.g., sales displacement versus stimulative effects). Therefore, even if the RIAA and HRRC studies are equally valid, it is not possible to reconcile their disparate findings.
- The studies do not explore the effects on net economic welfare of home copying, or of proposed policies to restrict or eliminate it. Given that the current legal status of home copying is ambiguous, it is appropriate and reasonable to examine the effects on consumers, as well as on industry.
- The focus on active tapers, as opposed to the general population, does not permit analysis for the population at large. By surveying only active tapers, the studies do not fully consider consumers' motivations for taping versus purchasing–in particular, why some consumers do not tape, and whether tapers and nontapers have different perceptions of the acceptability or fairness of home-taping practices.[23]
- While the recording industry's economic analyses of harm project increases in sales absent home copying, the estimates of lost sales revenues do not take into account the effect of price changes on the number of recordings purchased. The estimates assume that sales volume would increase substantially absent home taping.[24] But Greenspan's analysis and testimony also indicated that prices would be higher, absent copying. If consumers bought fewer recordings in response to these price increases then using the original estimate of increased sales volume in conjunction with higher prices overstates foregone revenues. Also, the RIAA estimates are of lost revenues, not lost profits, and the published analyses do not provide sufficient data to allow an independent estimate of profits.

The OTA survey and economic analyses were designed to remedy the first four of these points. OTA chose a population-based sample for two reasons: i) so that, where appropriate, the results would be applicable to the population at large, and ii) so that nontapers, as well as tapers, would have the opportunity to express their views. Including both tapers and nontapers is especially important in order for the OTA survey to shed new light on public perceptions about the fairness of home-copying practices and alternative policies.[25] The issue of sample design, however, was one of the most hotly contested aspects of the OTA survey's development. Both RIAA's and HRRC's view, shared by some of the other outside reviewers, was that the sample should consist of active tapers only, to get a larger number of observations of taping, given the study's limited resources. OTA's view, shared by some other outside reviewers, was that this advantage would be outweighed by the disadvantages of not being able to project results to the general public and, more important for a study for Congress, of ignoring the opinions of perhaps half the public.

---

[23]The OTA sample design was chosen to allow projection of sample results to the population at large. To do so, it is necessary to know each respondent's presumed probability of selection (for example, based on Census profiles); for a sample of tapers only, t his would be unknown. Therefore, the OTA sample consisted of randomly selected members of the public, including both tapers and nontapers.

[24]See hearings on S. 1739, op. cit., footnote 9, pp. 152-154 for details of the 1984 estimates.

[25]OTA had commissioned a phone survey on the public's familiarity with and acceptance of intellectual property rights, perceptions of a problem, and views on solutions, for the 1986 report. See "public Perceptions of the 'Intellectual Property Rights' Issue," The Policy Planning Group, Yankelovich, Skelly, and White, Inc., February 1985.

As for the last point, the OTA and contractor analyses also assume that prices remain constant in the short term.[26] But even when prices are held constant, the use of alleged lost revenues (as opposed to profits and royalties) is contentious, as was mentioned above. One way to address this in a comprehensive analysis of the economic effects of home copying would be to compare current sales volumes, variety, costs, and prices with those where copying had been eliminated or restricted several years earlier. Even if such a comparison were possible, the analysis would require industry data over those years on both costs that varied with production volume and those that did not,[27] along with data on retail transactions.[28] Even then, it would be virtually impossible to establish accurately the relationships between possible financial incentives and the supply of new creative works, or to estimate the benefit to society from the additional "investment" in creative works (see the section below on private copying and social welfare). Absent these industry data, both the OTA and contractor analyses had to focus on changes in industry revenues and could notestimate the changes in the demand for recordings as a result of changes in prices or the impact on the long-term supply of creative works. Although the results of our analyses **reflect the relative magnitudes of industry-revenue, consumer, and net economic welfare effects, they are only benchmarks for considering policy options.**

LITERATURE ON HOME COPYING

Several recent papers, prompted in part by the debates over home audio- and videotaping, have examined the economics of home copying.[29] Because economic effects of copying are complex and often ambiguous, these analyses usually rely on simplifying assumptions or specific conditions to reduce ambiguity. Therefore, the results must be interpreted in light of these assumptions and conditions.

The Effect of Private Copying on Welfare

Intellectual property is an example of the private production of a public good.[30] For intellectual property, ordinary market forces will not necessarily produce the most desirable social outcomes. Granting a limited monopoly via copyright attempts to balance distortions arising from the partial inability of

[26] See the discussion of Mannering's analysis below.

[27] OTA requested cost and variety data from the recording industry, but was only able to obtain the general, rule-f-thumb information presented inch. 4. Naturally, the firms hold this information closely. (OTA staff interviews with recording-industry and RIAA executives, MayJune 1988.)

[28] Published retail statistics from the National Association of Recording Merchandisers (NARM) do not include this information. RIAA industry data report shipments valued at suggested list price; retailers typically discount from list price. It is possible to construct approximations over a series of years using discounting rules; however, industry production cost data for a number of years would still be required.

[29] See also: OTA-CIT-302, op. cit., footnote 2, especially ch. 6; and an OTA contractor report prepared for the 1986 assessment, "Economic Issues Relating to New Technologies and Intellectual Property," Stanley M. Besen, contractor report prepared for OTA by the Rand Corp., Dec. 1984 (Springfield, VA: National Technical Information Service, 1986).

[30] For a discussion of public @s, see *The New Palgrave: A Dictionary of Economics,* John Eatwell, et al., editors (The Stockton Press, NY: 1987), pp. 1061-1066. A public good isonethat is nonexclusive: once it is produced, it is impossible (or prohibitively costly) to exclude any individual from benefiting from it, whether or not he pays. Individuals have an incentive not to pay for the good, or to undervalue it, in hopes of getting access as "free riders. " This results in inefficient resource allocation and underproduction of nonexclusive goods, and underlies the rationale for public support of activities like national defense and scientific research.

creators to exclude all nonpayers from obtaining their works.[31] Without protection of copyright, the inability of creators to fully appropriate returns from intellectual property would result in the underproduction of new works.

In the long run, the effect of unlimited copying on society's economic welfare is ambiguous. It depends on a number of factors, including the degree to which copying affects the demand for originals, the degree to which copying affects the production of new works, and the degree to which consumers value additional variety.[32]

The net social welfare effect of copying has two components: the effect on producers and the effect on consumers. Changing the amount of private copying (either increasing or restricting it) will affect not only the net level of society's economic welfare, but also the relative balance between producer and consumer welfares. This balance between gains and losses for producers and consumers is often the most visible and most hotly contested feature of proposed policies for redistributing the benefits from home taping. The specific effects of private copying on the economic welfare of producers and consumers depends on several factors:

- Whether private copying costs (including copiers' value of time) are lower or higher than producers' production and distribution costs (i.e., whether private copying is economically efficient or inefficient).
- Whether producers increase the price of originals to reflect the value of copies made from them, or whether producers reduce prices in an attempt to discourage copying.
- Whether producers charge different prices for the same good, at least to copiers and noncopiers.
- To what extent copying is a substitute for a purchase.
- How consumers vary in their copying costs and tastes.
- Whether the additional variety of originals offered absent private copying would be "excessive" in economic terms.[33]

Does increased copyright protection for goods like musical recordings and software increase or decrease society's economic welfare? Some claim that improvements in copyright protection will:

---

[31] RIAA notes that nonexclusivity need not tie the hands of policy makers. For example, in some other countries where it was not deemed possible or desirable to prevent home taping, a royalty system was instituted with the intent of (at least partially) compensating for nonexclusivity. (H. Rosen, Recording Industry Association of America, Inc., letter to OTA, May 2, 1989, enclosure with comments on draft ch. 8, pp. 12.)

[32] See, William R. Johnson, "The Economics of copying," *Journal of Political Economy*, vol. 93, No. 11, 1985, pp. 158-174. Johnson examines two models for copying to help explain why some consumers copy while others do not. The first model assumes that the cost of copying varies according to individuals' values of time. The second model assumes that large freed costs must be incurred (e.g., purchase of recording equipment) to copy, but copying is subsequently costless. Johnson concluded that, for both models, copying redistributes income away from copyright proprietors, although the effects of copying on the prices of originals and on social welfare are ambiguous.

[33] See Stanley M. Besen, "Private Copying, Reproduction Costs, and the Supply of Intellectual Property," *Information Economics and Policy*, vol. 2, 1986, pp. 5-22. For example, Besen notes that copying will increase consumer welfare **and** producer profits in the short run, if private copying is efficient *and* the price of originals can be raised to reflect the value of the copies. On the other *hand,* copying may cause producers to reduce prices; this decreases both consumers' and producers' welfare. If, however, copying (by reducing the number of originals produced) reduces "excessive" variety, this can increase welfare in the long run.

The recording industry considers that consumers of its product have always valued additional variety and that, "excessive variety, if it exists, is an issue of business strategy for individual record companies, not a social welfare problem." (H. Rosen, Recording Industry Association of America, Inc., letter to OTA, May 2, 1989, enclosure with comments on draft ch. 8, p. 3.)

- decrease the loss to society from the ***underproduction*** of works-the loss in quality and variety of goods produced when some consumers can use them without paying, and
- increase the loss to society from ***underutilization*** of these works — the loss due to consumers who would be willing to buy the good at a lower price[34] but do not consume it at the given price, plus the loss due to consumers who spend more real resources copying than the producer would to make an additional unit of the good.

Novos and Waldman consider a case in which consumers differ only in terms of their costs of obtaining a reproduction (not in their valuations of the good), and in which private copying is economically inefficient. In this instance, increased copy-right protection could lead to a decrease in the social loss from underutilization, provided that all individuals continue to consume the good.[35]

More generally, Novos and Waldman find that policies to increase copyright protection face a trade-off between losses due to underproduction and to underutilization. New copying technologies have tended to increase the former and to decrease the latter. If copying is inefficient, however, an improvement in copyright protection does not necessarily increase the underutilization loss. Also, if improved protection reduces the demand for originals, this might increase the underproduction loss.

Overall, then, the implications of increasing copyright protection are complex, and the policy trade-offs are not simple. In some cases, market outcomes (where different classes of consumers are charged different prices of a good, such as journals, or where copyable and noncopyable goods, such as computers and software, are bundled) may be preferable to increased government enforcement.[36] In choosing between government and industry actions to prohibit copying, Novos and Waldman conclude that the government should act when its cost of doing so is lower than the producer's cost of altering the product.[37]

Appropriability and Pricing

Private copying need not be harmful to producers, if copying is efficient and if producers can increase prices to take into account the value of the copies that will be made.[38] If not all consumers copy, or if consumers vary in the number of copies each makes from an original, then efficient pricing would require discriminating among these groups, charging them different prices according to their valuations of the originals, based on their ability to make copies. This type of price discrimination is usually infeasible, however, because it is costly and difficult to gather the necessary information on users' valuations of originals.[39]

---

[34]More specifically, who would be willing to pay the marginal cost of producing an additional unit of the good.

[35]Ian E. Novos and Michael Waldman, "The Effects of Increased Copyright Protection: An Analytic Approach," *Journal of Political Economy,* vol. 92, No. 2, April 19S4, pp. 236-246.

[36]See also Besen (1984), op. cit., footnote 29, pp. 13-23.

[37]Ian E. Novos and Michael Waldman, "The Emergence of Copying Technologies: What Have We Learned?" *Contemporary Policy Issues, vol. 5,* July 1967, pp. 34-43.

[38]See Besen (1986), op. cit., footnote 33, p. 7.

[39]The inability to practice perfect price discrimination among users can produce imperfections in markets for intellectual property.

A simplified form of price discrimination is two-tiered pricing, in which producers are able to segment their customers into two classes and maximize profits by charging each a different price.[40] Looking at the effect of photocopying on the number of scholarly journals purchased, Liebowitz has examined journal publishers' ability to indirectly appropriate copiers' true valuation of originals through higher subscription prices to libraries and institutions. He concluded that publishers can indirectly appropriate revenues from copiers who do not directly purchase journals. Since copying may have different effects on other media, however, case-by-case empirical investigation of the institutions and markets involved may be necessary.[41]

Price Discrimination, Resource Allocation, and Variety

The inability to charge different classes of consumers different prices for a good in intellectual-property markets means that the prices consumers pay need not reflect their actual valuations of the good: some value the good more, and will be willing to pay more. Those who do not value the good at a given price will not consume it. If they could be offered a lower price reflecting their valuation, however, then they would purchase it and both producers and consumers would be better off. Moreover, the decoupling of prices and valuations makes resource allocation — decisions about what to produce — more difficult and markets less efficient.[42]

Besen's analysis for the 1986 OTA report noted that where there are many producers of competing types of intellectual property, the resulting market structure is one of monopolistic competition: firms will have some control over the prices they can charge because their products are differentiated (e.g., music by different recording artists or groups). When firms are unable to charge different consumers different prices, however, there may be either excessive or insufficient variety.[43] Under these conditions, when private copying serves to reduce the variety of products being offered, it does not necessarily reduce the efficiency of supply or make consumers worse off.[44]

---

[40] See Walter Y. Oi, "A Disneyland Dilemma: Two-Part Tariffs for a Mickey-Mouse Monopoly," Quarterly *Journal of Economics*, February 1971, pp. 77-94. Oi describes how Disneyland's (then-) prevailing policy of charging separate admissions and ride prices could be optimal for a profit-maximizing monopolist. This was possible because customers varied in their tastes and could be divided into two groups, based on their valuations of going on a large number of rides.

[41] S. J, Liebowitz, "Copying and Indirect Appropriability: Photocopying of Journals," *Journal of Political Economy*, vol. 93, No. 5, 19s5, pp. 945-957.

[42] See Besen (1984), op. cit., footnote 29, pp. 1-4. See also Stanley M. Besen, Willard G. Manning, Jr., and Bridger Mitchell, "Copyright Liability for Cable Television: Is Compulsory Licensing the Solution?" (Santa Monica, CA: The Rand Corp., February *1977).* The authors note that congressionally mandated compulsory licenses for some uses (such as cable retransmission) are less efficient than requiring negotiations through full copyright liability. This is because consumers' willingness to pay for programs is perceived only indirectly by program suppliers.

[43] Where it is possible to charge copiers and noncopiers different prices, the interests of these groups of consumers could be de-coupled (Besen (1984), op. cit., footnote 29, p. 19). As a practical and marketing matter, however, this has not yet been tried for recorded music.

[44] See Besen (1984), op. cit., footnote 29, pp. 4-5. Entry (new firms, new products) will be profitable when new entrants can attract enough consumers from the incumbents to cover their costs, even if these exceed the value that consumers place on the additional variety. If excessive variety is being offered and if private copyingthen causes producers to decease the variety of products offered, the *result may be* to increase the efficiency of supply and make consumers better off. Conversely, if firms selling at a single price *find it* more profitable to "duplicate" products of their rivals than to offer more differentiated products, then insufficient variety will be offered, even without copying.

Brennan notes that the measure of how well copyright works should be the correspondence between the values listeners place on copyrighted works and the costs of providing them; the system should give incentives for works for which consumers collectively would be willing to cover the costs. He also notes that copyright is not intended to subsidize works that consumers would not financially support; if subsidization is socially desirable, then means other than revenues from home-copying fees should be used.[45] Brennan also suggests that policy regarding home taping should not be directed toward correcting any general perceived flaws in copyright.@

ANALYZING THE ECONOMIC EFFECTS OF HOME COPYING

The three economic analyses of home copying conducted for OTA all include a cost-benefit framework. Two of them, by Johnson and Mannering, use the survey data to work within this framework to provide some quantitative assessment of the effects of home copying on stakeholders. Each of the three looks at a different part of the home-copying puzzle: Katz considers implications for the profits of producers and distributors of originals; Johnson considers the determinants of copying and purchasing originals; and Mannering uses consumers' purchase/taping choices to examine hypothetically the short-term effects of a home-taping ban on producers' revenues and consumers' welfare. None of the analyses gives the complete picture of the economic effects of home copying; taken together, however, they cast doubt on the premise that eliminating home taping would be an unambiguously good move by Government or industry.

Home Copying and Its Economic Effects

The contractor report by Michael Katz[47] focuses on the theoretical effects of home copying on producers' profits but does not estimate them. According to Katz, both the market for recorded music and the market for electronically recorded visual images fall into the *hardware-software paradigm* –products are interdependent, produced and sold for use as components of hardware-software systems. Simplifying somewhat, stakeholders in these markets fall into five general classes, each affected differently by home copying:

. *Consumers:* Home copying has two broad sets of effects on consumers, one direct and one indirect. The direct effect–if the availability and prices of hardware and software are freed, independent of copying-is to make more choices available to consumers. Those who copy benefit from this effect, those who do not are unaffected. The indirect effect recognizes that the collective actions of home copiers may affect the supply of hardware and software– contrary to the assumption above. One possible indirect effect, when copying serves to reduce the variety of available software and increase prices, would be negative.[48] The net effect on an individual consumer

45 Brennan, op. cit., footnote 18, pp. 99-100.

46 T. Brennan, The George Washington University, letter to J. Winston, OTA, Apr. 24, 1989 (enclosure).

47 Michael L. Katz, "Home Copying and Its Economic Effects: An Approach for Analyzing the Home Copying Survey, " contractor report prepared for the Office of Technology Assessment, Mar. 9, 1989 (Springfield, VA: National Technical Information Service, October 1989).

48 Another theoretically possible effect is positive, when copying stimulates the supply of *soil.ware* (see section below on demand effects).

is the sum of the direct and indirect effects. When the indirect effect is a reduction in variety, coupled with an increase in prices, the net effect on the home copier depends on the balance between this loss and the gain from making copies. Consumers who do not copy experience the indirect effects and may be hurt through the actions of others. If, however, the indirect effect is to cause more and varied goods to be produced, then consumers who do not copy also benefit.[49]

Software Producers: The economic effect of home copying on producers depends on whether home copying stimulates or dampens the demand for originals. Either case is theoretically possible. For audio recordings, the industry could be characterized by: 1) a creation stage in which there are a large number of firms producing similar, but not identical, products, and 2) recording, manufacturing, and wholesale distribution stages (typically performed by an integrated recording company) in which the number of firms is small and firms are aware of the mutual relationships of sales, production, investment, and advertising plans. In the creation stage, the recording company in effect invests in a lottery by channeling its resources to particular songwriters and artists. In such a market, the effect of reduced demand is to lower the expected returns from coming up with a "winner" and thus, to lower the expected return from entering the industry. Therefore, if home copying does lower demand, then there are likely to be fewer firms in the creation stage of the industry, and fewer new products offered. In the long run, however, the firms would be expected to earn a competitive rate of return, with or without home copying. Because of the structure of the recording, manufacturing, and wholesale distribution stages the effect of copying on them can be extremely complex, but lower demand is likely to decrease profits.[50]

- *Retail Software Distributors:* The effects of home copying are somewhat similar to those discussed for the software producers' creation stage (above). If copying stimulates the demand for originals and entry is easy, there should be more retail distributors and higher employment in this sector; if it depresses demand, then there should be fewer distributors and lower employment.[51]

  Retail distributors' interests diverge from those of software producers in some important ways. First, distributors may profit from being able to sell originals used to make copies, even if total sales of originals are reduced (e.g., if the distributor rents videocassettes or broadcasts album sides). Second, if some distributors are paid by manufacturers on a unit volume (rather than dollar volume) basis, their interests may diverge: if copying results in fewer originals being sold at higher prices, manufacturers may not be significantly harmed, but distributors would be if their profits were based on unit sales, rather than dollar volume.

[49] See Katz (1989), op. cit., footnote 47, p. 2.

[50] See Katz (1989), op. cit., footnote 47, pp. 2-4.

[51] Katz' classification of "retail distributors') includes several groups who provide the product to the final consumer – e.g., retail record stores, video rental stores, radio stations, etc.

- *Hardware Producers and Distributors:* The effects of home copying are largely the same for these groups, which are treated together here. The direct effect is that the greater availability of software (via copying) will make the hardware-software system, hence the hardware, more valuable. If indirect effects on the supply of software (see above) are positive, hardware producers and distributors will also gain. If, however, indirect effects on software supply lead to a reduction in the supply of originals, the value of the systems and its hardware will be adversely affected. Similar considerations arise when copying increases the price of software. This reduces consumers' willingness to pay for hardware since the two system components are used jointly.[52]

Analyzing Possible Effects[53]

According to Katz, estimating the relative strengths of the effects of home copying on the above stakeholders reduces to answering two fundamental questions:

1. What are the lost profits of producers and distributors?
2. How is the supply of software affected?

The first question cannot be answered fully without extensive proprietary data from individual firms for a number of years. These would be needed to model competition in producers' and distributors' markets and firms' responses to changes in demand and to calculate price-cost margins (to determine profits).[54] The difference between software producers' profits with and without home copying depends critically on the nature of competition in the industry, and how the prices and quantities produced respond to changes in the demand for originals; the latter is a question that producers themselves can best answer.

Katz notes that producers' cost data are needed to estimate the effects of copying on producers' *profits,* rather than revenues. The relevant cost is the total *marginal cost*— the extra cost of producing an additional unit – of the record, tape, or CD, including all levels in the production/distribution chain. Without these data, and price data, Katz concludes that there is little that can be said about the magnitude of the economic harm to producers, except for loose bounds (like foregone revenues under some pricing assumption, as in Mannering's analysis).[55] Katz notes that the number of copies made is "almost certainly" an upper bound on the decline in the demand for originals at a given price, but that using this quantity to estimate foregone revenue can yield a "very loose" upper bound on harm.[56]

For the second question – how the supply of software is affected, one would need to play out various scenarios based on the effects of copying on producers' profits.

---

[52]See Katz (1989), op. cit., footnote 47, p. 4-5.

[53]See Katz (1989), op. cit., footnote 47, pp. 5-7.

[54]Johnson and Mannering use simplifying assumptions to deal with these questions.

[55]The RIAA disagrees with this point, considering that the revenue effect is the salient one. (H. Rosen, Recording Industry Association of America, Inc., letter to OTA, May 2, 1989, enclosure with comments on draft chapter 8, p. 1.)

[56]See Katz (1989), op. cit., footnote 47, pp. 5-7.

In their analyses, Johnson and Mannering make simplifying assumptions to partially circumvent this dilemma. As tables 11 and 12 in this chapter show, different assumptions about the substitution of copies for originals yield a very broad range of revenue effects.

Effects of Home Copying on Demand for Originals[57]

Katz discusses households' decision processes and consumers' tastes as determinants of the extent of copying, while taking into account the monetary costs of copying, as well as the time required to make copies or obtain originals, and the perceived quality of copies relative to originals.

Katz notes that, because copies cannot always be substituted for originals and because originals are needed to generate copies, copying has a very complex effect on the demand for originals: when copying is feasible, originals are worth more because they can be used to generate copies. Moreover, even if copies could always be substituted for originals, an increase in the availability of copies might stimulate the demand for originals. This would be counteracted by effects that would suppress demand, including demand for multiple units of an original.[58]

Katz concludes that, taken together, these effects produce a "twist" in the demand for originals: consumers' willingness to pay for early units of an original rises (the original can be used as a source of copies), but demand for later units falls (copies serve as substitutes for originals). This twist is what makes it so difficult to assess the effect of the change in demand on producers' profits— different assumptions about market structure and demand yield disparate results, depending in part on the producers' ability to influence prices, the relative efficiency of home copying compared with the cost of producing originals, the producers' ability to appropriate the consumer's full value of originals, and the producers' ability to charge different prices to different classes of consumers (e.g., by discounting multiple purchases or bundling formats like CD/cassette).[59]

Katz also notes that – in theory, at least – copies and originals could be used jointly, rather than as substitutes. If so, then lower costs of copying might be expected to stimulate sales of originals somewhat, by enhancing consumers' expected benefits from purchasing originals. One benefit might be the free-sample effect: a copy might be a low-risk way to try a new piece of software, and considerations like ethics, the desire to get liner notes, or a desire for higher quality might then induce the consumer to buy an original. Also, copies might provide software in an otherwise unavailable form: consumers could make customized or selection tapes, could time-shift broadcast material, or could copy the material from one format to another to place-shift. Copying might stimulate consumer purchases of hardware, which in turn would increase the demand for original software, which would lead to additional sales. Finally, copies might generate benefits relating to the fact that consumers value a hardware/software system more, the more popular that system and compatible ones are. Economists refer to these benefits as "network externalities."[60]

---

[57] See Katz (1989), op. cit., footnote 47, pp. 7-17.

[58] Katz (1989), op. cit., footnote 47, p. 9.

[59] See Katz (1989), op. cit., footnote 47, pp. 9-lb, for specific examples of how profits with home copying can be higher or lower than those without, depending on the assumptions about the marginal costs of copying and producing originals and the firm's choice of pricing strategies.

[60] A larger user base can increase the amount of information available about the system, make free samples more available, enhance the image of a popular product, etc. See Katz (1989), op. cit., footnote 47, pp. 15-17, for more discussion.

Home Copying and the Demand for Originals

The contractor paper by William Johnson[61] is concerned with the effects of home copying on the market for originals, from a positive, rather than normative, perspective. Therefore, Johnson examines the effects of copying on sales of originals, but does not examine whether restrictions on home copying are warranted. Johnson develops a theoretical framework to estimate the effects of private copying and uses data from the audio portion of the survey done for OTA to estimate some of the determinants of home audiotaping and of purchasing original recordings. His results provide some support for the notion that an individual's choice between copying and buying originals is affected by the value of his time – higher values of time raise the number of purchases of originals and reduce the extent of copying. Although Johnson attempted to use these estimates to assess the effect of copying on the purchase of originals, he concluded that the precision of his estimates did not permit him to approximate the extent to which copies were substituted for originals.

A Simple Model of Private Copying[62]

Johnson bases his model on an individual's cost-benefit trade-off for buying versus copying a particular work. He assumes that copies and originals are equivalent in use, that both purchasing and copying of the same work takes place, and that most individuals engage in some copying and some purchasing. The presumed specification of a consumer's valuation of the use of a particular work (in the form of either an original or a copy) depends on particular attributes of the work and on attributes of the consumer that are observable (e.g., age) and unobservable (e.g., tastes). The consumer's cost of obtaining a copy of that work depends on a factor that is related to the particular work and copy, on his value of time, and on unobservable factors that are specific to him but, in general, constant across all works.

In this model, a consumer will buy an original of a particular work if his valuation of the work exceeds its price and buying is cheaper than copying for him. On the other hand, if his valuation exceeds the cost of copying the work and the sale price exceeds the copying cost, he will copy rather than buy.[63] Therefore, the producer/seller of a particular work faces demand that will clearly decrease as the price of the work rises-consumers will buy fewer originals, make more copies, and use originals less intensively in copying.

A more interesting question is what the model predicts about the demand for originals if the cost of copying shifts. If the cost of copying drops for all consumers, there may be little effect on the demand for originals when their prices are low. For "moderate" prices of originals, the effect may be substantial, with many consumers substituting the cheaper copies for originals. At high prices for originals, the model suggests that the effect of cheaper copies may be to raise the demand for originals, primarily for their use as a source of copies.

---

[61] William R. Johnson, "Estimating the Effect of Copying on the Demand for Original Creative Works," Contractor report prepared for the Office of Technology Assessment, Mar. 3, 1989 (Springfield, VA: National Technical Information service, October 1989).

[62] See Johnson (1989), op. cit., footnote 61, pp. 2-9.

[63] Remember that the copying cost includes time costs and difficulty of access to originals. In this retie], getting the work at the least cost – i.e., saving money – is the decision criterion because copies and originals are assumed to be perfect substitutes.

In Johnson's model, some consumers buy, others copy, others do neither. In a given population, the number who copy will depend on the distribution of the components of consumers' costs and valuations. There maybe additional demand for originals as sources of copies, but this will decline as prices rise and consumers economize in the use of originals. Moreover, an extra copy will tend to create a demand for less than one additional original.

If a hypothetical ban on copying were imposed, the demand for originals would shift. In theory, at a given price consumers might buy either more or fewer originals than they would have bought were copying possible. In the face of consumers' responses to a copying ban, producers might raise or lower their prices for originals. Determining the difference between producers' sales and revenues in copying versus no-copying scenarios to measure their losses due to copying requires considering these two effects. The first effect can be predicted from the response of demand for originals to the cost of copying. This allows estimation of the net (positive and negative) effect of copying on the demand for originals when price is held constant. Because the price effect is not included, this will understate losses due to copying. Omitting the second effect always leads to understating the loss (or overstating the gain) copying causes to producers of originals.

Data Analysis and Estimation

Johnson uses data from observations of copying and purchases taken at one point in time to measure differences in individuals' copying costs. The simple model, described above, is extended from individual decisions about a single work to consider a large number of differentiated works. Johnson specifies an individual's expected demand for purchases and for copies as functions of the ranges of prices of original works, of his costs of copying, and of his valuation of works, as well as of observable and unobservable personal attributes.

Johnson focuses on the audio portion of the survey data, particularly the sections on purchase and ownership of originals and on copying and stocks of copies.

Purchase and Ownership-Johnson calculated daily purchase frequencies from responses to the "most recent purchase" sequence of questions (survey questions 30-37). The average frequency for the whole population seemed too high, however: at 0.039 per day, it would imply a yearly purchase frequency of 14 sound recordings per year. Industry shipments data seem to correspond to a much lower rate — perhaps 3.5 or 4 sound recordings per year per person over the age of 10.[64] Johnson notes that the frequency estimation is extremely sensitive to the few observations of very recent purchases, so "(telescoping," or reporting a more recent purchase than was the case, may have caused a large upward bias; this could also have occurred for estimates of copying frequency.[65]

Johnson has two ways of addressing this problem. First, he uses alternative measures of purchase and copying behavior, such as the stock of recordings and the number purchased in the last month. Second, since a similar effect seems to occur for his copying estimates, he assumes that estimates of *substitution* between copying and purchases would be unaffected by equal proportional biases in copying and purchasing behaviors.

To at least partially mitigate telescoping, Johnson constructed a second variable representing the *number of purchases last month;* the mean value (0.59) implies an annual purchase rate of about 7, which is smaller than the daily frequency implies but still larger than national sales figures. The survey data on *stocks* of recordings do seem in accord with past sales figures, however. For example, Johnson finds that the per-person stock of CDs (3.8) is the same order of magnitude as

[64] See Johnson, Op. cit, footnote 61, pp. 9-10. He uses 1986 RIAA shipments data, based on 200 million people, aged 10 or older in 1986.

[65] The method used by OTA in ch. 6 to estimate overall copying and purchasing is less sensitive to these effects. Aggregating Purchasing or copying into categories like "past week" or "past month" reduces sensitivity to individual data points and to telescoping, there the estimates based on the "last time" and "stock change in last month" are in closer agreement.

total accumulated sales of CDs in the United States. Per-person stocks of other recordings were 19 45-rpm records, 37.5 LP records, and 21 prerecorded cassettes.[66]

Copying and Stocks of Copies–Johnson also calculated daily taping frequencies from responses to the (most recent) broadcast taping and prerecorded taping sections of the questionnaire.[67] As before, the estimates of taping frequencies seemed excessively high – the mean daily rate of broadcast taping was 0.023 and the mean daily rate of taping from prerecorded material was 0.036. This would yield a combined rate of 0.059 per day, or 21.5 per year — roughly 50 percent higher than the estimated purchase rate of sound recordings. Johnson notes, however, that these estimates from self-reported data are not compatible with industry sales figures for blank tape, and seem to be as inflated as the estimates of self-reported purchase frequency.[68]

Johnson's estimate of the average number of *tapes made in the last month* is about 0.58, for an annual average of 7. As was the case with purchase behavior, these data imply lower rates than the frequency data, but still higher than aggregate sales would indicate. Johnson finds that the estimate of the average *stock* of home copies (from responses to question 29) is 13.8 tapes per person, which is of the same rough magnitude as past accumulated blank-audiocassette sales.[69] Of these copied tapes, most (an estimated 10.7) were copied by the current owner. In overall stocks of recordings, the stock of copied tapes is about one-quarter the size of the stock of LPs, and about two-thirds the size of the stock of prerecorded cassettes. Given the rate of copying and the size of the stock of copied tapes, it is somewhat surprising that in the "last-listening" section of the survey, only one-tenth of the respondents reported that they were listening to a copied tape. Johnson speculates that this finding might indicate that people copy music they are less interested in — and perhaps less likely to buy– which would be consistent with the survey finding that copied tapes (especially those made from records or other tapes) are regarded as being of somewhat lower quality than prerecorded cassettes.[70]

Time Spent Making a Copy– Items in survey question 45 ask about the time devoted to making the last home tape, and the amount (if any) the copier would have been willing to pay someone else to make that tape. Johnson found that the mean copying time was slightly more than 2 hours; he considers this an upper bound to the time cost because all of this time need not have been lost to other activities. The question on willingness to pay for a copy was only answered by 66 individuals who said they would consider paying someone else to make the tape for them, so that the results, which show an average willingness to pay of $6.63,[71] may be unreliable.

---

[66] Johnson (1989), op. cit., footnote 61, p. 10."

[67] A copy of the questionnaire is in appendix B (see questions 43 and 44).

[68] The International Tape/Disc Association reports sales of some 387.5 million blank audiocassettes in 1987, or about 2 per person over the age of 10. Since the survey data indicated that about 80 percent of copies are made using blank tapes, Johnson infers that the average copying frequency should be around 2.5 per year.

[69] About 11 blank tapes have been sold per person since 1980 (Johnson (1989), op. cit., footnote 61, p. 11). Remember that a "tape" is not necessarily equivalent to an "album."

[70] Johnson (1989), op. cit., footnote 61, pp. 11-12. See ch. 6 of this report for stock data.

[71] At an average wage of $10/hour, this would imply that the true time cost of taping was 2/3 of an hour. (Johnson (1989), op. cit., footnote 61, p. 12)

Empirical Estimates of Copying and Purchasing Behavior

Johnson concluded that the best variables to use to depict current copying and purchasing behaviors are the frequency variables described above: despite their apparent inconsistency with aggregate industry data, if the degree of bias is the same for everyone, then estimates of the determinants of that frequency at one point in time will be unbiased, except for a proportionality factor.[72]

Dependent and Independent Variables– Johnson's specification has demands for copies and originals depending on income, relative prices, and demographic variables (used as surrogates for tastes).[73] Income effects are captured by household income and demographic variables. Relative prices are more difficult to capture. Because the price of originals does not vary significantly in the cross-section at one point in time (as opposed to time-series data over several years), the price effects must focus on copying costs. For these, several measures are possible: the amount of time reportedly taken up to make the copy; the willingness to pay someone else to make the copy; and proxies for the value of time, including employment status and earnings. Johnson found that the performance of proxies for the value of time in the estimates was more in keeping with the predictions of his model than the other two measures, which were plagued by smaller numbers of responses. Table 7-1 presents all the variables used in the analysis, with descriptive statistics and sample sizes.

Results of Estimation – Johnson estimated[74] measures of purchasing and copying, with employment status as proxy for the cost of copying.[75] Tables 7-2 and 7-3 show the results using three measures of original purchases (daily frequency, purchases last month, and stock of prerecorded cassettes) and employment status to capture the cost of copying. Tables 7-4 and 7-5 show estimation results for the three measures of copying behavior (daily frequency, taping last month, stock of copied tapes.

These coefficients in tables 7-2 through 7-5 show the sensitivity of the dependent variables (daily frequency, etc.) to each of the independent variables (employment status, etc.) when controlling for variations in the others.[76] For example, employment status and gender (male) both have similar positive

[72]Although the variables representing purchases or copies made in the last month seem to have the virtue of reducing the telescoping problem, these variables are less reliable than the frequency ones. It is less desirable to use the stock variables because they are much more influenced by past, rather than current, behavior (e. g., stocks of LP records do not reflect current LP purchase rates). (Johnson (1989), op. cit., footnote 61, pp. 12-13.)

[73]But direct estimation of the substitution between copies and originals is not possible because the demand for copies is not independent of the demand for originals. Johnson finds that copying is positively related to original demand in the sense that those who copy more also buy more originals. (Johnson (1989), op. cit., footnote 61, p. 13.)

[74]Three-stage least squares and Tobit estimators were used. The system of equations estimated were appropriate pairings of purchase and copying variables (e.g., purchase frequency with copying frequency, etc.). For more information on these techniques, see Takeshi Amemiya, *Advanced Econometrics* (Cambridge, MA: Harvard U. Press, 1985).

[75]Johnson also tried using the other two measures for the cost of copying to help explain purchasing/copying frequencies, but these estimates were less successful. For purchasing frequency, none of the estimated coefficients was statistically significant. For taping frequency, only one coefficient in each of the estimations (the age coefficient in the one using copy time, and the gender coefficient in the one using willingness to pay) was significant. Johnson notes that, in part, the unsatisfactory results for the alternative measures of copy cost may be due to the smaller numbers of respondents for the time-to-copy and willingness-to-pay questions. Also, variations in copy time may reflect variations in the quality of the copy, rather than in the true cost of acquiring it. See Johnson (1989), op. cit., footnote 61, p. 16.

[76]The figures in parentheses are the coefficients' t-statistics. Depending on the number of coefficients being estimated and the number of observations, an absolute value oft near 2 (or more) generally indicates that the estimated coefficient values are statistically significant. Note that many of the coefficients are not statistically significant – i.e., the hypothesis that their true value is zero cannot be rejected at the 95 percent confidence level. The sign of a coefficient indicates whether its effect is to increase or decrease the likelihood of purchasing an original, the stock of originals, etc.

Table 7-1. -Variable Description and Statistics

Variable	Description	Mean (standard deviation)	Valid observations
Daily purchase frequency	Daily rate of purchasing recordings	0.039 (0.421)	1,433
Daily taping frequency	Daily rate of taping	0.059 (.0265)	1,140
Original tape stock	Number of prerecorded cassettes owned	20.69 (23.9)	1,366
Stock of copied tapes	Number of home-recorded cassettes owned	10.99 (20.3)	1,376
Purchases last month	Number of 45s, LPs, CDs and prerecorded cassettes bought last month	0.059 (2.5)	1,501
Taping last month	Number of audiocassettes taped last month	0.056 (2.5)	1,501
Employed	= 1 if employed O if not	0.563 (0.496)	1,501
High school	= 1 if education 12 years or more but not college graduate = O if not	0.555 (0.497)	1,501
College	= 1 if college graduate O if not	0.192 (0.394)	1,501
Nonwhite	= 1 if nonwhite O if not	0.155 (0.362)	1,501
Male	= 1 if male O if not	0.480 (0.500)	1,501
Age	Age in years	39.2 (19.0)	1,491
Income	Annual household income ($1000)	33.3 (23.7)	1,120
Copy willingness to pay	Willingness to pay for copy (cents)	663 (499)	66
Copy time	Time to make last copy (minutes)	133 (292)	393

SOURCE: Johnson, 1989

effects on the size of an individual's stock of originals (see table 7-2); being male has a statistically significant positive effect on daily taping frequency; and age has a significant, but smaller, negative effect (see table 7-5).

The coefficient estimates in tables 7-2 through 7-5 were obtained by using employment status as proxy for the relative cost of copying. The mathematical specification Johnson uses would allow him to approximate the substitution of copies for purchases of originals by the ratio of the coefficient on employment in a purchasing-behavior equation and the same coefficient in a copying-behavior equation. But no statistically significant ratio can be constructed.[77]

[77] See Johnson (1989), op. cit., footnote 61, pp. 8-10, 16-17. There are six such ratios. The numerators of four and the denominators of the other two are not statistically significant, so one cannot conclude with confidence that they are significantly different from zero.

Table 7-2. -Tobit Estimates of Original Purchases
(asymptotic absolute t-statistics in parentheses)

Independent variable	Daily purchase frequency	Purchases last month	Original stock
	N = 895		
	(1)	*(2)*	*(3)*
Employed	**-0,017**	-0.265	*4,47*
	(.72)	**(.31)**	*(2.08)*
High school	**2,17**		*797*
	(1.106)	**(1 .85)**	*(2.91)*
College	0055	*2.24*	*6,60*
	(1.41)	(1.55)	(1.88)
Nonwhite	**-0,031**	-0,684	*-426*
	(.98)	**(.61)**	(1.49)
Male	**0.030**	**2.17**	
	(1 .38)	**(2.79)**	(2.03)
Age	**-0.0056**	**--0.179**	**-0.418**
	(8.91)	**(7,34)**	**(7,72)**
Income	0.002	**0.012**	**0.137**
	(4.88)	**(78)**	**(3 23)**

NOTE: Sample restricted to persons 16 and older
SOURCE: Johnson, 1969

Table 7-3.–Three-Stage Least Squares Estimates of Original Purchases
(asymptotic absolute t-statistics in parentheses)

Independent variable	Daily purchase frequency	Purchases last month	Original stock
	N=895		
	(1)	**(2)**	**(3)**
Employed	**-0.0022**	**-0.201**	**322**
	(0.14)	**(112)**	**(189)**
High school	**-0,0013**	**0.187**	**574**
	(0067)	**(832)**	**(2.69)**
College	**-00021**	-0.040	**4.33**
	(0.083)	**(0,138)**	(1.56)
Nonwhite	**-0,0022**	0.074	**3.64**
	(0104)	(0309)	**(160)**
Male	**0.022**	**0.514**	**3.64**
	(3,85)	**(2,97)**	**(221)**
Age	-0.0024	-0.022	-0227
	(2.66)	(5.11)	(5.42)
Income	**0.0024**	0,002	0.096
	(3.85)	(055)	(280)

NOTE: Sample restricted to persons 16 and older
SOURCE: Johnson,1989

Table 7-4. -Tobit Estimates of Taping Behavior
(asymptotic absolute t-statistics In parentheses)

Independent variable	N=895 Daily taping frequency	Taping last month	Stock of copied tapes
	(1)	(2)	(3)
Employed	-0.073 (1 ,55)	0.376 (0.33)	-0.943 (0.38)
High School	0.052 (.86)	-1.17 (0.87)	 (1.52
College	0,0012 (0.015)	-2.54 (1 ,38)	7.32 (1 .80)
Nonwhite	0.1606 (2.84)	4,51 (383)	7.12 (2.22)
Male	0.173 (3,96)	2.53 (2.54)	 (2.69)
Age	-0.016 (11.5)	-0,285 (7.98)	-0.605 (9.44)
Income	0.002 (2.42)	0.027 (1.36)	0.094 (1 91)

NOTE: Sample restricted to persons 16 and older
SOURCE: Johnson, 1969

Table 7-5.-Three-Stage Least Squares Estimates of Taping Behavior
(asymptotic absolute t-statistics in parentheses)

Independent variable	N=895 Daily taping frequency	Taping last month	Stock of copied tapes
	(1)	(2)	(3)
Employed	-0.055 (261)	0.112 (0.60)	-1.14 (078)
High School	0.015 (059)	-0.492 (213)	3.43 (1.89)
College	-,024 (0,707)	-0.452 (1.50)	4.92 (2,08)
Nonwhite	0.037 (1.32)	O 523 (2.12)	4.56 (2.36)
Male	0.059 (287)	0.456 (2.56)	4.45 (319)
Age	-0.0025 (477)	-0.026 (5.73)	-0.227 (6.36)
Income	0.0005 (1,17)	0.0019 (0.526)	0,042 (142)

NOTE: Sample restricted to persons 16 and older
SOURCE: Johnson, 1969

Therefore, Johnson concludes that the estimates do not permit an approximation of the substitution of copies for purchases of originals. However, Johnson finds that they do shed some light on the determinants of copying and purchasing behavior. In particular, Johnson concludes that:[78]

- Income raises the demand for both copies and purchases.[79]
- The value of time affects both copying and purchases of originals; a high value of time induces consumers to copy less and buy more.[80]
- Controlling for other variables, copying is more prevalent among the young, nonwhites, and males. Copying is more concentrated among the young than is purchasing.[81]

Consumer Welfare and Audio Home-Copying Restrictions

The contractor report by Fred Mannering[82] estimates econometric models of consumers' purchase/taping choices and uses them as a basis for determining the change in consumer welfare as a consequence of an audio home-copying ban.[83] Mannering's report provides a framework for a cost-benefit analysis of such a ban. His detailed analysis of the economic consequences of such a ban leads him to conclude that, at least for the short term, the ban's costs to the public outweigh its benefits to the recording industry, its workers, and artists.

While the scenario of a ban on home audiotaping might seem unrealistic, it can be used to explore possible differences between the levels of industry revenues, consumer welfare, and net social welfare in the present environment (with home audiotaping) and in a hypothetical world without taping. That is, it provides a means for estimating hypothetical short-term changes in recording-industry revenues *absent home taping,* under various assumptions about the extent to which taping displaces sales of recordings.[84] The primary contribution of Mannering's analysis is that it focuses attention on consumers' valuation of homemade tapes and thereby, *for the short term,* on the hypothetical decrease in consumers' economic welfare, absent taping.[85]

---

[78] See Johnson (1989), op. cit., footnote 61, pp. 15-16 and 17.

[79] The income coefficients for daily frequency and stock (but not last-month behaviors) are positive and statistically significant.

[80] The employment coefficient for daily taping frequency is negative and significant but employment does not raise daily purchase frequency. The employment coefficient for stocks of originals is positive and significant; it is imprecisely estimated for stocks of copies. Therefore, it is difficult to find a substitution of copies for originals in the daily frequency data, and the stock data do not allow a definite conclusion concerning substitution.

[81] When other things are held constant, males are more likely to copy and buy. When other things are held constant, being nonwhite raises the frequency of copying and stock of copies; the effect on purchasing may be negative, hut the coefficients are imprecisely estimated. Age exerts a very strong (and statistically significant) negative effect on all variables, with the effects on taping being larger than those on purchasing. The size of the reported stock declines rapidly with the individual's age, particularly for copied tapes.

[82] "Consumer Welfare and Audio Home Taping: An Empirical Assessment," Fred L. Mannering, contractor report prepared for the Office of Technology Assessment, Feb. 13, 1989 (Springfield, VA: National Technical Information Service, October 1989).

[83] For example, this "ban" could be the result of technological copy-protection.

[84] These calculations are similar to the method that Townsend & Greenspan used for the RIAA studies, except that they indicate how different interpretations of the OTA survey data can support a range of values for the displacement rate, and produce a range of hypothetical revenue changes, rather than a single value.

[85] Mannering's analysis is somewhat a mirror i ... of th, recording industry's analyses: instead Of estimating hypothetical losses to the recording industry due to home taping, he estimates the hypothetical gains to the industry and losses to consumers' welfare if taping were eliminated. The welfare loss to consumers is a monetary valuation of consumers' loss in satisfaction, without any loss in actual income, after a taping ban. Neither the Townsend & Greenspan nor the HRRC analysis reported any estimates of consumers' benefits from home taping.

Mannering notes that banning home audio copying has generally been promoted on the grounds that consumers' copying significantly reduces the recording industry's revenues, jobs, and royalties. But Mannering notes that many other factors must be considered in assessing the true economic consequences of a possible ban on home audio copying. Arguably, the most significant of these is that consumers will be less well off as a result of the ban, since it would eliminate the choice of an important audio format — home copies. To assess the magnitude of this loss, one would have to answer the following question:

> How much would consumers have to be compensated after the ban to have them as well off, in terms of satisfaction, as they were before the ban?

Mannering's study focuses on obtaining a monetary measure of this hypothetical compensation by using data on consumers' choices of listening formats from the "last-listening" section of the survey (questions 9-28).

In their comments on Mannering's contractor report and on a draft version of this OTA report, representatives of the recording industry objected vehemently to this basic approach and the assumptions of this type of analysis. According to RIAA:

> "...This analysis turns the home taping issue on its head. It assumes without explanation or documentation that consumers are or might be entitled to some form of compensation upon a ban of home taping. We object to the notion that revenues associated with the enjoyment of copyrighted music are 'up for grabs' and that they should be distributed away from copyright holders in favor of home tapers and the hardware industry based on a detached 'consumer welfare' analysis."[86]

By contrast, representatives of the consumer electronics and blank-tape industries considered Mannering's general approach the proper one to take. They noted, however, that because Mannering estimated hypothetical lost recording-industry revenues (that HRRC also considered to be overstated), he consequently understated society's hypothetical net loss from eliminating taping. According to HRRC:

> "The paper by Fred Mannering adds an important dimension to the evaluation of home taping by focusing attention on the magnitude of welfare benefits to consumers of the home audio tapes they make... [but]...[t]his calculation *understates* dead weight loss. Only the profits of the industry and rents paid to copyright holders [not revenues] should be netted against consumer welfare effects to calculate dead weight loss."[87]

This difference in views reflects the continuing and fundamental disagreement among stakeholders as to the legal status of home audio copying. Those who interpret the ambiguous state of the current law to mean that home taping is a violation of copyright quite reasonably view it inappropriate to consider lost "benefits" to which they contend consumers were never entitled. Those who interpret the current law to mean that home taping does not violate copyright will consider that such benefits should properly be taken into account in setting policy.

Disagreements of this sort underscore the ambiguity of the current law. Given that ambiguity, OTA considers it reasonable to examine the effects of home copying– or a copying

[86] H. Rosen, RIAA, letter to J. Winston, OTA, May 2, 1989 (enclosure with comments on draft ch. 8, P. 4).

[87] Gary J. Shapiro, Robert S. Schwartz, Steven R. Brenner, HRRC, memo to OTA with comments on economic issues, May 1, 1989, pp. 17-18.

ban–on consumers' welfare, industry revenues, and society's economic welfare. The last section of this chapter will present Mannering's calculations and other examples to illustrate the range of possible effects supported by the survey data.

Figure 7-1. - Overview of the Audio Format Decisionmaking Process

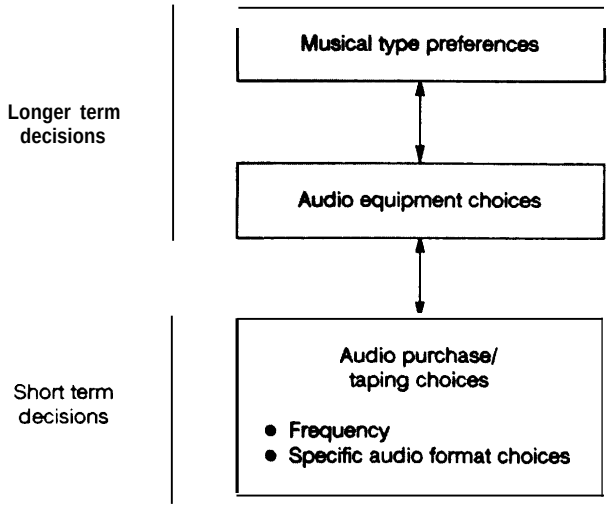

SOURCE: Mannering, 1989

Analysis

Mannering's empirical analysis focuses solely on the consumer's choice between purchasing an original format (record, cassette, CD) and making a tape at home, on the basis of the format the consumer last chose to listen to.

The Audio Format Decision-Making Process[88] — Mannering relates the effect of a home-taping ban on consumer welfare to each consumer's decision-making process in choosing among audio formats (records, prerecorded cassettes, copied or "made-tapes," or CDS). This decision-making process ultimately determines the value that consumers place on having the "made-tape" format as an available choice. The choice of a specific audio format is the last of three complex, interrelated, and time-variant decision processes (see figure 7-1):

1. *Musical type preferences–classical,* country and western, soul, heavy metal, rock, etc. These preferences evolve from cultural, social, and economic influences, and play a key role in the choice of audio equipment and in specific purchase/taping decisions since certain types of music tend to benefit more from use of higher-quality formats and audio equipment. In turn, musical-type preferences are influenced by consumers' existing stocks of audio equipment.
2. *Audio equipment choices* –CD player, car tape deck, stereo record player, etc. Aside from the effect of musical-type preferences and socioeconomic, consumers' expectations about the frequency and purpose of equipment use are important factors in their choice of audio equipment.
3. *Purchase/taping choices* – frequency (the number of purchases and/or tapings made in some time period) and specific formats (records, prerecorded cassettes, CDs, or made-tapes). This choice differs from the other two, which are really much longer-term decisions. The purchase/taping choice is short-term in nature, and is the one audio-related decision that a taping ban would *immediately and most significantly* affect. Although the longer-term choices above influence the purchase/taping choice, other factors like format price, availability and use of substitute media (e.g., a car radio instead of a car tape deck), con-

[88] See Mannering, op. cit., footnote 82, pp. 2-4.

sumers' socioeconomic conditions and tastes, and expectations of usage (e.g., choosing a CD in anticipation of frequent play) also are significant.

General Study Approach and Limitations[89] – To comprehensively model the interrelated long- and short-term choices detailed above would require extensive panel data on the behavior of the same cross-section of consumers over time.[90] Absent such data, Mannering focuses only on the consumers' *short-term* decisions between purchasing or taping audio recordings. He uses a carefully constructed, cross-sectional survey of audio-related behavior to develop and estimate models to assess how a copying ban would affect social welfare. His necessary focus on consumers' short-term decisions imposes some limitations on subsequent welfare computations.[91]

The first types of limitation are *model limitations.* Because the model does not explicitly account for longer-term choices, Mannering cannot assess the effects of an audio home-copying ban on consumers' choices of audio equipment and musical-type preferences.[92] Furthermore, he cannot estimate the changes in purchase prices of various formats that are likely to occur after such a ban.[93] Thus, his model must assume that consumers' musical type preferences and audio equipment stocks, as well as purchase prices, remain constant in the face of a home-copying ban. The effect of this assumption on welfare estimates is ambiguous, primarily because industry pricing of recordings and audio equipment is not predictable. Another modeling concern arises from the interrelationship between the frequency of audio purchase/taping choices and the specific formats chosen. This interrelationship results from the fact that the frequency is, in part, a function of the satisfaction the consumer derives from specific purchase/taping format choices. Given this, frequency and individual choices should be modeled jointly, but this was not feasible. Therefore, estimates of changes in welfare require assumptions as to how the frequency of purchase/taping decisions will be affected by a home-copying ban.[94]

The second types of limitations are survey *limitations* related to the "most-recent-listening-experience" approach taken in the survey. Consumers were asked to recall their most recent listening experience to determine the musical selection/format they listened to at that time, as well as the length of time they had owned that specific item. This creates two concerns. First, purchase/taping decisions that occurred many years ago are problematic – consumers may have had different musical tastes and stocks of audio equipment. To mitigate this, Mannering uses only purchase/taping decisions made during the year preceding the survey. Second, the "most-recent" approach is likely to uncover past purchase/taping decisions that resulted in format

---

89 See Mannering, op. cit., footnote 82, pp. 4-7.

90 Ideally, these data would cover a period of years to ensure proper specification of the interrelationships among choices; they would be costly to collect.

91 Modeling the longer-term choices of musical-type preferences and audio equipment requires socioeconomic, taste, and audio inventory information at the time such decisions were made, which may have been a number of years ago.

92 Without the home-taping option, consumers may adjust their audio equipment stocks, and perhaps even their musical type preferences (e.g., toward discounted types, in an effort to hold their audio budgets constant).

93 Estimating such price shifts would require a model that includes industry price behavior and consumer purchasing behavior to predict equilibrium format prices after the ban.

94 One would expect that the ban would lower the frequency because the taping alternative would be eliminated. Since at least some additional purchases are likely to be made, however, the net frequency will approach pre-ban levels.

choices that tend to be more heavily used. To the extent that usage and format are interrelated, some bias w-ill be introduced in estimating the purchase/taping choice model and the subsequent changes in welfare.[95]

Survey Results-Of the 1,501 completed survey interviews, 517 respondents provided data that Mannering could use in his analysis since they reported they had listened to recorded music they had acquired in the past year. In table 7-6, Mannering summarizes the statistics of these respondents, whom he divides into two groups – those having only record and tape audio equipment (400 respondents) and those having record, tape, and CD equipment (117 respondents). This segmentation reflects significant observed differences in purchase/taping behaviors.

Table 7-6 begins by presenting, for the last listening experience, the percentage of respondents choosing each of four formats: LP, prerecorded cassette, made-tape, and CD. Mannering's estimation results indicate that prerecorded cassettes are the preferred format among non-CD owners, whereas CDs are the preferred format among CD owners. For non-CD owners, the made-tape option is the least preferred; for CD owners, records and made-tape options are least preferred.[96] Comparing CD and non-CD owner format inventories (from survey question 29), Mannering finds that, on average, CD owners have larger inventories of all formats; they also have substantially higher purchase frequencies, as indicated by the reported number of purchases in the last month. This suggests that individuals choosing to own a CD tend to be more active audio consumers. The socioeconomic comparison of the two groups offers few surprises: Mannering finds that CD owners tend to be younger and are more likely to have full-time employment and higher income than their counterparts who do not own CDs.

Econometric Framework and Estimation Results[97]–Assuming that respondents select the purchase/taping format option that provides the most satisfaction, Mannering used a multinominal logit choice model of individuals' format choices.[98] He specified the format choice as a function of the format choice itself, the price of the format, the consumer's income, his existing format inventories, his stock of existing audio equipment, and other socioeconomic conditions (e.g., employment, education, etc.).

Mannering's estimated model fit the data well. Tables 7-7 and 7-8 show the estimation results for those who do not own a CD player and those who do, respectively. Most were statistically significant, as indicated by the t-statistic. Furthermore, Mannering was able to conclude that consumers viewed the prerecorded cassette and made-tape options as distinct.[99]

---

[95]This type of bias could be eliminated via standard econometric procedures for interrelated discrete/continuous choices. But these could not be used without a more extensive cross-sectional sample than this data set contains.

[96]While "records" include LPs, EPs, and 45s, Mannering finds that LPs/EPs are the dominant choice among a majority of respondents. A relatively small number of people use 45s, but they tend to be relatively frequent purchasers with large inventories.

[97]See Mannering, op. cit., footnote 82, pp. 9-15.

[98]For a description of logit models, see D. McFadden, "Econometric Models of Probabilistic Choice," in *Structural Analysis of Discrete Data with Econometric Applications* (Cambridge, MA: MIT Press, 1981); and K Train, *Qualitative Choice Analysis: Theory, Econometrics, and an Application to Automobile Demand* (Cambridge, MA: MIT Press, 1986).

The method is somewhat analogous to a regression where the dependent variable – i.e., the format choice — is discrete, rather than continuous. A particular advantage is that the model can be shown to be consistent with utility-maximizing behavior.

[99]Mannering used a specification test developed by Small and Hsiao. See Mannering (1989), op. cit., footnote 82, p. 15; and K. Small and C. Hsiao, "Multinomial Logit Specification Tests," *International Economic Review, vol. 29, No. 3, 1985.*

Table 7-6.-Sample Summary Statistics (averages unless otherwise noted)

	Non-CD owners	CD owners
Percent choosing LP format	17.0	10.26
Percent choosing prerecorded tape format	75.0	28.21
Percent choosing made-tape format	8.0	10.26
Percent choosing CD format	–	51.27
Annual household income (dollars)	32,140	40,120
LP inventories	43.2	60.5
Prerecorded tape inventories	26.1	34,4
Made-tape inventories	14.7	29.1
CD inventories	–	27.6
Percent with car tape deck	74.3	86,3
Percent white/nonwhite	85/15	87/13
percent male/female	38/62	58/42
Age (years)	34.6	30.5
Education (years)	12.6	12.7
Percent with full-time employment	49	61
Number of LP, prerecorded tape, and CD purchases in the last month	0.21	1.57
Number of household members	3.18	3.18
Percent indicating sound quality is extremely important to listening	25.5	58.1

SOURCE: Mannering, 1989

For the non-CD group, Mannering found a preference against made-tapes, relative to the record format option; this could reflect the time investment required for made-tapes.[100] Format price, relative to household income, had a highly significant negative effect on the probability of selecting a format. The total inventory of all formats was found to have a significant positive effect on the made-tape format choice that may have reflected the fact that active audioconsumers tend to have high usage rates of the made-tape option. The car tape deck indicator variable has the expected sign (positive), with those consumers having a car deck being more likely to select tape formats (prerecorded cassette or made-tape).[101] Finally, the sound-quality indicator (from survey question 14) demonstrates that those consumers in the non-CD group who considered that sound quality was extremely important were less inclined to select the prerecorded cassette option. This tends to support the popular notion that prerecorded cassettes offer inferior sound quality when compared with records or even made-tapes recorded from CDS on high-grade audiotape.

[100] The non-CD group's slight relative preference for prerecorded cassettes over records was not statistically significant.

[101] In addition, whites were more likely to select tape options.

Table 7-7.–MultInominal Logit Estimation Results for Individuals Not Having a CD Player in Home or Car (t-statistics in parenthesis)

	Estimated coefficient
Constant for prerecorded tapes	0.366 (1.0297)
Constant for made-tapes	-2.92 (-5.638)
Format purchase price (in dollars) divided by annual household income (in thousands of dollars)	-2.327 (-3.471)
Total record and tape inventory, defined for made-tape option only	0.0059 (1.76)
Car tape deck indicator defined for tape options (1 if have car tape deck, O otherwise)	0.7427 (2.59)
Race indicator defined for tape options (1 if white, O otherwise)	0.905 (2.80)
Sound quality indicator variable defined for prerecorded tape option only (1 if sound quality extremely important, O otherwise)	-0.449 - 1.724)
Number of observation	400
Log-likelihood at zero	-439.44
Log-likelihood at convergence	-272.37

SOURCE. Mannering, 1989

Table 7-8.– Multinominal Logit Estimation Results for Individuals Having a CD Player in Home or Car (t-statistics in parenthesis)

	Estimated coefficient
Constant for prerecorded tapes	13351 (3 28)
Constant for made-tapes	-1012 (-1 .37)
Constant for compact discs	O 728 (1 .096)
Format purchase price (in dollars) divided by annual household income (in thousands of dollars)	1618 (2.00)
Sound quality indicator variable defined for prerecorded tape option only (1 if sound quality extremely important, O otherwise)	-0582 (-1 37)
Race indicator defined for compact disc option (1 if white, O otherwise)	1211 (1 91)
Classical music indicator defined for compact disc option only (1 if listen to classical music, O otherwise)	(
Full-time employment indicator defined for made-tape option only (1 if employed full time, O otherwise)	1 166 (1 54)
Number of observations	117
Log-likelihood at zero	162.20
Log-likelihood at convergence	12929

SOURCE. Mannering, 1989

This result is particularly interesting because the explicit survey questions about the perceived quality of various formats (question 15) and quality as a motivation for taping (question 45j) did not yield this result for the sample population as a whole.[102]

[102] Remember that Mannering's subsample of 517 (out of a possible 1,501) all had listened to recorded music they had acquired in the last year.

For the CD group, Mannering's coefficient estimates are broadly similar in terms of interpretation to those for the non-CD group. For this group, Mannering found on average a preference for prerecorded cassettes to records.[103] As with the non-CD group (and, as expected) the signs of the price/income variable and the (prerecorded cassette) sound-quality variables were negative. Mannering again found that race was a significant factor–perhaps as a proxy for other environmental/taste effects – with whites more likely to choose the CD format, when other things were held constant.

Mannering found that the classical music indicator showed that individuals who had chosen classical music (survey Q. 17) tended to select the CD option, apparently to take advantage of the CD's superior sound quality. Finally, he found that the employment indicator suggested that individuals with full-time employment have a preference for the made-tape option.[104]

From these estimation results, Mannering calculated how consumers' choices of various formats would respond to increases in prices of the formats relative to annual income. He reports these choice-probability elasticities in table 7-9 for respondents who do not own a CD player and in table 7-10 for those who do. All the elasticities have absolute values of less than 1;[105] Mannering concludes that these low elasticities most likely reflect the habitual use of formats and the significance of the longer-term factors of musical-type preference and audio-equipment stocks. Interestingly, the absolute values of the choice-probability elasticities for both of the tape format options (prerecorded cassette and made-tape) are smaller than for the LP records and CD options. This means that the shift in preferences away from one of the tape format choices would be smaller than the analogous shift away from the LP or CD option. [106]

Consumer Welfare Effects of a Home Copying Ban[107]–To determine the change in consumer welfare resulting from a ban on audio home copying, Mannering uses *"compensating variations"*— measures of how much money a consumer would have to be given after the ban, to be as well off in terms of satisfaction as before the ban.[108] He weighted these measures by consumers' reported purchase/taping frequencies.[109] This calculation yielded

[103] Estimated coefficients indicating preferences for CDs relative to records and against made-tapes relative to records were not statistically significant.

[104] The coefficient was not statistically significant at the 95-percent level. Mannering speculates that it may reflect the practice of custom taping for use in a car tape deck during the work commute.

[105] Elasticity is defined as the percentage change in one variable with respect to a l-percent change in the other. For example, the (non-CD) choice probability elasticity with respect to LP purchase price/household income (table 7-9) implies that a 1 percent rise in the price/income ratio will give roughly a 0.6 percent decrease in consumers' probability of choosing records in a purchase/taping decision (for the CD group (table 7-10) the decrease would be about 0.4 percent).

[106] Furthermore, for CD owners, the made-tape choice was more inelastic than the prerecorded cassette choice. For non-CD owners, the made-tape choice was the more elastic. This contrast may reflect CD owners' option to make tapes from CDs.

[107] See Mannering, op. cit., footnote 82, pp. 18-23.

[108] Remember that th, RIAA considers that because home taping infringes copyright, no compensation is due. (H. Rosen, RIAA, op. cit., footnote 86.)

[109] See Mannering, op. Cit., footnote 82, pp. 19.20. For details of the technique, see K. Small and H. Rosen, "Applied Welfare Economics with Discrete Choice Models," *Econometric, vol. 49, 1981.*

Table 7-9.– Choice-Probability Elasticity Estimates for Individuals Not Having a CD Player in Home or Car (t-statistics In parenthesis)

Elasticity with respect to:	Elasticity
LP purchase price (in dollars) . . . divided by annual household income (in thousands of dollars)	-0,592
Prerecorded tape purchase ., price (in dollars) divided by annual household income (in thousands of dollars)	-0,214
Made-tape purchase price . . . . . (in dollars) divided by annual household income (in thousands of dollars)	-0.312
Total record and tape inventory, . . defined for made-tape option only	0.346

SOURCE Mannering, 1989

Table 7-10.–Choice-Probabiiity Elasticity Estimates for individuals Having a CD Player in Home or Car (t-statistics in parenthesis)

Elasticity with respect to:	Elasticity
LP purchase price (in dollars) divided by annual household income (in thousands of dollars)	0.385
Prerecorded tape purchase . . . . . price (in dollars) divided by annual household income (in thousands of dollars)	-0.332
Made-tape purchase price . . . . . (in dollars) divided by annual household income (in thousands of dollars)	-0.221
CD purchase price (in dollars) . . . . . divided by annual household income (in thousands of dollars)	-0.416

SOURCE. Mannering, 1989

a frequency-weighted average compensating variation of $1.62— imposing a ban would result in a consumer-welfare loss of $1.62 for each purchase/taping decision. This estimate assumes that the total number of purchase/taping decisions remains the same after the made-tape option is eliminated, and that the other options are unaffected by the ban.

This technique cannot account for the effects of long-term changes in musical-type preference, equipment stock, purchase/taping frequencies, or use of alternative media. Although the direction of the estimate bias induced by these effects is not clear, most of the excluded effects are longer-term in nature. This suggests that the compensating variation obtained under these assumptions will be a reasonable portrayal of actual short-term impacts– say, over the first year after the ban.[110]

The average *frequency-weighted* probability of selecting the made-tape option is 15.8 percent.[111] This implies that the consumer values each made-tape at $10.25 ($1.62/0.158) –a reasonable value given the current prices of records, prerecorded cassettes, and CDs, and the unique characteristics of made-tapes (potentially superior sound quality, option to combine songs by more than one artist, ability to customize by selecting only desirable songs, etc.). To understand the implications of this value, consider the average consumer making 10 purchase/taping decisions. On the basis of the 15.8 percent probability, this consumer can be expected to make 1.58 made-tapes per 10 purchase/tapings. Using Mannering's compensating-variation calculation indicates that in the short term — for example, during the first year after a taping ban– the consumer would have to be paid $16.20 ($1.62X 10) to be as well off as before the ban.

[110] This technique could also be used to used to evaluate other policies that might restrict, rather than eliminate home taping.

[111] Note that this is higher than the unweighted percentage choosing the made-tape option as indicated in table 7-6. This reflects the fact that the consumers in the sample with higher probabilities of choosing the made-tape option also have higher purchase/taping frequencies.

Estimating Hypothetical Industry and Consumer Effects Absent Taping

Previous analyses have not presented estimates of the economic effects of home audiotaping on consumers. Although the recording industry only considers lost revenues to be relevant for policy,[112] consumer effects are important when considering society's economic welfare. This section will evaluate three types of hypothetical effects:

- the change in recording-industry revenues (i.e., retail sales of albums or the equivalent), absent home taping,
- the change in revenues from blank-tape sales, absent home taping,
- the change in consumers' economic welfare, absent home taping, based on Mannering's estimates of the compensating variation and consumers' valuation of homemade tapes.

Calculations will use 1987 price and sales volume figures, consistent with the time period of Mannering's estimates. The hypothetical change in net economic welfare, absent home taping, can be estimated by combining the industry-revenue and consumer-welfare effects. This estimate will roughly approximate the net effect, because changes in industry profits and rents (i.e., recording and blank-tape industry profits and royalties to performing artists and copyright holders), rather than industry revenues, should be used. We are unable to obtain industry data with which to estimate price-cost margins, thus revenues are used. For illustrative purposes, a "ballpark" range for recording industry profits and rents will be provided, based on the 40-percent figure that Greenspan presented in his testimony. OTA considers that this is an upper bound for recording-industry profits and rents.

The estimates in this section select a broad range of plausible values for the industry and consumer effects, but do not attempt to account for the fraction of music tapings that are fair use or are done by amateur or professional musicians, composers, etc.

On the basis of the number of home tapes assumed not to be made, we can use Mannering's compensating variation and the $10.25 valuation of homemade tapes to estimate the hypothetical short-term decrease in consumers' economic welfare absent home music taping. On the basis of the assumed number of tapes that would not be made and the assumed sales displacement and/or sales stimulation effects of taping, the hypothetical short-term effects on recording-industry revenues can be estimated. Similarly, if blank tapes were not purchased to make home tapes, the hypothetical effects on blank-tape revenues can be estimated.

The same starting point –i.e., the number of blank tapes sold in a given year — can be used to produce a broad range of estimates. Calculations of this sort are necessarily inexact, since they rely on sequences of assumptions and approximations. Moreover, even the premises used to approximate the industry and consumer effects are subject to dispute.[113] For a chosen framework, various approaches to interpreting and using survey and industry data are possible. Often, several alternatives are equally plausible, and the choice is subjective. Thus, analysts can disagree as to the "preferred" calculation.

---

[112] See above. This point was emphasized in the RIAA comments on a draft of this report.

[113] For example, depending on one's perspective as to the legal status of home taping, one might prefer a net-economic-welfare framework, as opposed to a focus only on recording-industry revenue effects. As we have seen, RIAA favors the latter approach, while HRRC favors the former.

Tables 7-11 presents ranges for the estimated industry, consumer, and net economic effects absent all home taping. Table 7-12 presents estimates absent home taping from prerecorded sources only. These examples show broad ranges of values, but the end points should not be interpreted as maximum or minimum values.

The calculations in table 7-11 are based on a range of conclusions about the hypothetical effects of a ban on home taping that the same set of survey data and other sources can be "shown" to support. The starting point for these is the number of blank tapes sold in 1987. The calculations are based on:

- Mannering's value for made-tapes,
- estimated 1987 average retail prices of $7.80 per album-equivalent and $2.45 per blank tape,
- a 1983 Audits and Surveys finding that 84 percent of blank tapes are used to record music, and
- the 1988 OTA survey finding that 79.6 percent of tapings use new blank tape.

The variations, a dozen examples in all, differ according to:

- whether an attempt is made to correct for business use of blank tapes,[114]
- how much sales-displacing material is assumed to be on each tape,[115]
- how the OTA survey questions on displacement are interpreted and/or discounted to produce the displacement rate, and
- whether the ability to make home tapes is assumed to stimulate some purchases of prerecorded music.

The three variations categorized under (A) in table 7-11 follow the calculations in Mannering's contractor report, which considered the effects of a ban on music taping from both prerecorded and broadcast sources. Mannering used industry sales data from 1987 (the last year that complete data were available at the time of writing), along with some earlier survey results to augment the OTA survey.[116] The sales data indicated that industry shipments of prerecorded formats reached an annual rate of 637 million album-equivalents in 1987, while roughly 388 million blank audiocassettes were sold. Mannering concluded that if as the 1983 Audits and Surveys results indicated, roughly 84 percent of blank tapes are used to record music, then some 326 million blank tapes were used to record music in 1987. Since the OTA survey data (question 43g) suggested that 79.6 percent of tapings used nonblank (preused) tapes, Mannering calculated that about 409.5 million blank and nonblank tapes were used to make home music tapes. On the basis of the OTA survey data, he also estimated that home tapes contained an average of 1.63 album-equivalents of material (questions 44d-441).

From responses to survey questions 451 and 45n, Mannering determined that (for those respondents asked these questions), a net of about 4 of every 10 albums taped would have

[114] According to the HRRC, some 10 percent of consumer purchases of blank tapes are for business use. Therefore, they argue, these are presumably not used for music taping and blank-tape sales should be adjusted accordingly. (Gary J. Shapiro et al., op. cit., footnote 87, p. 26.)

[115] Mannering estimated that home tapes contained on average 1.63 album equivalents. The HRRC argues that consumers might not purchase all the recorded material on a home tape, if taping were not possible. (Ibid., p. 22)

[116] Audits and Surveys, "Home Taping in America," op. cit., footnote 11; A. Greenspan (Hearings on S. 1739), op. cit., footnote 9; International Tape/Disc Association, "Report on 1987 Blank Audio Cassette Sales" (New York, NY: ITA, 1988); Recording Industry Association of America, "News Release of Apr. 19, 1988 on 19871 ndustry Shipments"; Warner Communications, Inc., " 1981 Estimate of Loss Due to Home Taping, " op. cit., footnote 11.

Table 7-11.—Hypothetical Changes Absent Home Music Taping (All Sources) — Short Term Only

Recording industry	A			B			C			D		
a. 1987 blank tape sales	388 M			388 M			388 M			388 M		
b. base (home use)	100%			100%			90%			90%		
c. % used for music taping	84%			84%			84%			84%		
d. # of blank tapes used	326 M			326 M			293 M			293 M		
e. % of music taping on blank tapes	79.6%			79.6%			79.6%			79.6%		
f. # of blank & non-blank tapes used for home music taping	409.5 M			409.5 M			368.5 M			368.5 M		
g. # of album-equivalents per home tape	1.63			1.0			1.0			1.0		
h. assumed sales displacement rate	38%	21%	5.4%	38%	21%	5.4%	38%	21%	5.4%	38%	21%	5.4%
i. # of displacing album-equivalents	254 M	140 M	36 M	156 M	86 M	22 M	140 M	77 M	20 M	140 M	77 M	20 M
j. average 1987 price per album-equivalent	$ 7.80	$ 7.80	$ 7.80	$ 7.80	$ 7.80	$ 7.80	$ 7.80	$ 7.80	$ 7.80	$ 7.80	$ 7.80	$ 7.80
k. hypothetical gross recording-industry displacement change absent taping	$1981 M	$1092 M	$ 281 M	$1217 M	$ 671 M	$ 172 M	$1092 M	$ 601 M	$ 156 M	$1092 M	$ 601 M	$ 156 M
l. assumed sales stimulation rate	0%	0%	0%	0%	0%	0%	0%	0%	0%	2%	2%	2%
m. 1987 shipments (album-equivalents)	–	–	–	–	–	–	–	–	–	637 M	637 M	637 M
n. # of lost sales (album-equivalents)			–			–	–	–		13 M	13 M	13 M
o. hypothetical recording-industry revenue stimulative change absent taping	–	–	–	–	–	–	–	–	–	-$101 M	-$101 M	-$101 M
p. hypothetical *net* recording-industry revenue change absent taping	**$1981 M**	**$1092 M**	**$ 281 M**	**$1217 M**	**$ 671 M**	**$ 172 M**	**$1092 M**	**$ 601 M**	**$ 156 M**	**$ 991 M**	**$ 500 M**	**$ 55 M**
q. 40% as hypothetical net change in profits and royalties	**$ 792 M**	**$ 437 M**	**$ 112 M**	**$ 487 M**	**$ 268 M**	**$ 69 M**	**$ 437 M**	**$ 240 M**	**$ 62 M**	**$ 396 M**	**$ 200 M**	**$ 22M**

(Continued on next page)

Table 7-11.–Hypotheticai Changes Absent Home Music Taping (All Sources) – Short Term Only (continued)

Blank-tape Industry		
r # blank tapes assumed not purchased for music taping (1987) (see idem d above) . . .	326 M	293 M
s 1987 average price per blank tape	$2.45	$2.45
t. hypothetical revenue change absent music taping	**-$799 M**	**-$718 M**
Consumer welfare		
u # of home music tapes not made (see item f above)	**409.5 M**	368.5 M
v consumer valuation (per tape)	**$10.25**	$10.25
w. hypothetical consumer-welfare change absent music taping	**-$4197 M**	**-$3777 M**
x. Range of net economic welfare change (based) on industry revenues) .	**43015 M** – **TO** –	**-$4440 M**

NOTES:

a From industry sales data, International Tape/Disc Assoaation (ITA), 1988
b According to the HRRC, about 10% of all consumer tape sales are for professional (not home) use
c From Audits & Surveys data, 1982
d d = axbxc
e From OTA survey data, 1988
f f – d/e
g The 163 figure comes from OTA survey data, 1986 The HRRC argues that consumers might not purchase all the material on the made tape
h Various interpretations of OTA survey data, 1988 Mannering used the 38% and 21% figures, the HRRC suggested an alternative discounting yielding 5.4%
j i = f x g x h
j Calculated by Mannering from RIAA Market Research Committee data, 1988
k k = ix j
l OTA survey does not yield a measure of this rate directly Forsake of illustration, a 2% rate is assumed OTA
m Album-equivalent shipments from RIAA data, 1888
n n = l xm
o o = n x -$(7.80)
p p = k + o
q Townsend& Greenspan (1985) suggested that 40% of gross revenues went to company profits and royalty payments
r See (d)
s Calculated by Mannering from ITA data, 1988
t t = -(r x s)
u See (f)
v Estimated by Mannering, 1989
w w = (u x v)
x x = p + t + w

Table 7-12.-Hypothetical Changes Absent Home Music Taping From Prerecorded Sources - Short Term Only

Recording industry	E			F			G			H		
a total blank & nonblank tapes used for home music taping	409.5 M			409.5 M			366.5 M			366.5 M		
b. # of album-equivalents per home tape	1.63			1.0			1.0			1.0		
c. % of music taping from prerecorded sources	57%			57%			57%			57%		
d. assumed sales displacement rate	36%	21%	5.4%	36%	21%	5.4%	36%	21%	5.4%	36%	21%	5.4%
e # of displacing album-equivalents	154 M	80M	80M	89M	49 M	13 M	80M	44M	11 M	80M	44M	11 M
f. hypothetical gross recording-industry displacement change absent taping (@ $7.60 ea)	$1131 M	$624 M	$ 156 M	$694 M	$362 M	$ 101 M	$624 M	$343 M	$ 86M	$624 M	$343 M	$ 66 M
g. assumed sales stimulation rate	0%	0%	0%	0%	0%	0%	0%	0%	0%	2%	2%	2%
h. 1967 shipments (album-equivalents) . . .	–	–	–	–	–		–	–		637 M	637 M	637 M
i. # of lost sales (album-euivalents) . . .					–	-.	–		.	13 M	13 M	13 M
j. hypothetical recording industry stimulative change absent taping . .							-	–		-$101 M	-$101 M	$101 M
k. hypothetical net recording-industry revenue change absent taping	$1131 M	$624 M	$ 156 M	$694 M	$362 M	$ 101 M	$624 M	$343 M	$ 66 M	$523 M	$242 M	-$ 15 M
i. 40% as hypothetical net change in profits and royalties	$452 M	$ 250 M	$ 62 M	$278 M	$ 153 M	$ 40 M	$ 250 M	$ 137 M	$ 34 M	$209 M	$ 97 M	-$ 6M

Table 7-12.-Hypotheticai Changes Absent Home Music Taping From Prerecorded Sources – Short Term Only (continued)

Blank-tape Industry		
m. # of blank tapes assumed not purchased from prerecorded sources (57% **of tapings)**	186 M	**167 M**
n. 1967 average price per blank tape	$2.45	**$2.45**
0. hypothetical revenue change absent music taping	**-$456 M**	**-$409 M**
Consumer welfare		
p. # of home tapes from prerecorded sources not made	**233 M**	**210 M**
q consumer valuation (per tape)	**$10.25**	**$10.25**
r. **hypothetical consumer welfare change absent music taping**	-$2366 **M**	**-$2152 M**
s. Range of net economic welfare change (baaed] on industry revenues)	**$1713 M** To	**-$2576 M**

NOTES:

a See item f in table 7–11
b See Item g m table 7-11
c OTA survey data, 1988
d See item h m table 7-11
e e = ax b xcxd
f f = ($7 SO) x e See item j in table 7-11
g See item I in table 7-11
h RIAA data, 1988
ı ı=g xh
I j ˙-($7.80) x i
k k = f + j
l See item q in table 7-11
m See item r in table 7-11, m = 326 M or 293 M times 57
n Calculated by Mannering from ITA data. 1988
o o = -(m x n)
p p = (057 x a)
q Estimated by Mannering, 1909
r r = -(p x q)
s s = k + o + r

SOURCE: Office of Technology Assessment, 1989

been purchased if home taping were not available.[117] Only those respondents who answered "yes" to Q.45i–indicating that they thought they *could have purchased a recording with the same material, if they had wanted to* – were asked these "sales-displacement" questions. For the entire population, after accounting for perceptions about the availability of a prerecorded version, a net of about 2 of every 10 albums taped would have been purchased if home taping were not an option. Mannering presented calculations using both values.[118] Some reviewers have subsequently argued that even the lower value greatly overstates the displacement rate that could be most plausibly inferred from the survey data. Drawing on the market research practice of halving the undiscounted "take rate" indicated by responses to questions like the two above, these reviewers suggested that abetter assumption would be a 5.4 percent sales displacement rate.[119] The "true" rate can be very confidently bounded by O and 40 percent. For each set of variations in table 7-11, hypothetical revenue increases have been calculated using displacement rates of 38, 21, and 5.4 percent.

Since fewer blank tapes would presumably be sold, absent home music taping, blank-tape revenues would decrease. Table 7-11 calculates this hypothetical revenue loss using an estimate of $2.45 for the average 1987 retail price.[120]

Short-term consumer-welfare losses (i.e., in the first year) are based on the 409.5 million blank and nonblank tapes that will no longer be used for the made-tape option, valued at $10.25 per foregone made-tape (see rows u-v of table 7-11). These estimated consumer losses exceed estimated industry revenue gains from the ban and produce a net economic loss to society.[121]

For the calculations in variation (B) of table 7-11, each made-tape is assumed to contain only one album-equivalent of material. In variations (C) and (D), the base of blank-tape sales is reduced by 10 percent to account for business use of blank tapes, under the assumption that these are not used for music taping. Also, variation (D) assumes that some sales of recordings are stimulated by the ability to make home tapes from them. Because the OTA survey does not allow this effect to be measured directly, a nominal value of 2 percent was selected for illustrative purposes; actual values may be higher or lower.

Note that the twelve variations used as examples produce a very broad range — by over a factor of30– of hypothetical recording-industry revenue changes absent home audiotaping. These variations do not, however, alter

---

[117] A net of 38 percent of taped albums were reported as would-be purchases. Respondents indicated that nearly 5 of every 10 roped albums are would-be purchases, but that one of these 5 would displace another purchase, leaving the net effect at nearly 4 out of 10. This is roughly the same figure reported by Warner Communications in 1982 and used in the Townsend & Greenspan analyses.

[118] Mannering considered that the upper bound is the more reasonable one, because prerecorded formats could reasonably act as a substitute for a customized home tape, even if the material is not exactly the same (e.g., the custom tape might delete or add a single song, compared with an album).

[119] Shapiro et al., op. cit., footnote 87, pp. 25-27.

[120] Mannering determined the unit tape price from the 1984 figure ($2.24) as reported by Greenspan and adjusted it to 1987 price levels by assuming an annual tape price inflation rate of 3 percent.

[121] Table 7.11 approximates this as the sum of recording- and blank-tape industry revenue changes and the change in consumer welfare. Strictly speaking, industry profits and rents, not revenues, should be used. Therefore, table 7-11 overstates the industry effects.

To provide some perspective as to the magnitude of this loss, Mannering estimated that for net industry revenue gains (the sum of changes in recording- and blank-tape revenues) to exactly balance consumer welfare losses, the average consumer would have to re-Wire only $2.88 (as opposed to $10.25) compensation to forego a made-tape choice, under the assumption of a 38-percent sales-displacement ratio. For a 21-percent ratio, the consumer would have to value the made-tape at only $0.71, less than the price of a blank tape.

the qualitative result, which indicates a consistent lost in consumers' economic welfare and in society's economic welfare. Furthermore, blank-tape revenues decrease throughout.

Table 7-12 summarizes calculations similar to those in table 7-11, except that it only considers music taping from prerecorded sources. The OTA survey indicated that some 57 percent of home audiotapings are from prerecorded sources (see ch. 6). In table 7-12, although blank-tape revenues decrease throughout, the losses are smaller because fewer sales are lost. Consumers' economic welfare losses are smaller because only 57 percent of home tapes are not made; similarly, the net economic loss to society is smaller than in the examples in table 7-11.

Thus, although home taping may reduce the recording industry's revenues, a ban on home audiotaping would be even more harmful to consumers, and would result in an outright loss of benefits to society, at least in the short term, in the billions of dollars.[122] The longer-term consequences of such a ban are less clear, and would depend on how the recording industry's profits were invested, how additional revenues would affect creativity, how recording companies chose to price their products, what new technologies were developed, and how consumers' tastes changed. **In the long term, the net effects on society's economic welfare might be positive or negative.**

Mannering's analysis suggests that the social costs of a home-taping ban can be significant in the short term, but that the range of possible effects is very broad. Moreover, the long-term effects are ambiguous, depending on responses by the recording industry and society's valuation of any additional works that are produced, absent home taping. The possible net effects (on industry and consumers) must be given careful consideration in policy formulation. **It is** potentially misleading **to base policy on an** estimate **of one of several harms or benefits.**

[122] Even ignoring effects on blank-tape revenues, the loss to society from a ban would be in the $2-$3 billion range (depending on the sales-displacement rate used).

Appendixes

Appendix A
Survey Development and Review

Survey development was in two major stages: 1) preliminary activities, including contractor selection and focus group meetings, and 2) survey instrument development and review.

PRELIMINARY ACTIVITIES

Contractor Selection

OTA retained the services of a professional survey research firm, Schulman, Ronca & Bucuvalas, Inc. (SRBI), to develop the survey instrument and to administer the survey. SRBI was selected as the survey contractor in May 1988 from a field of 14 firms that submitted proposals for consideration.

SRBI's responsibilities, as specified in the contract, included developing and revising a conceptual framework and conducting two focus-group meetings. Then SRBI was to develop the sampling plan and survey instrument in conjunction with OTA staff and OTA's survey working group. The survey instrument was expected to average 20 minutes in length (that is, it would be much shorter for respondents who did no taping or copying and longer for respondents who had a number of copying *activities).* After the survey instrument was completed, SRBI was to administer it to a nationally representative sample of 1,500 persons of age 10 and over.

Focus Groups

SRBI held two focus-group meetings at the beginning of the survey development process. Focus groups are small discussion groups of about 10 people randomly selected from a population similar to the expected survey population. The meetings are structured, in that the discussion leader has a specific agenda of questions to ask and topics to cover. They are, however, designed to encourage the participants to speak freely on the topics and to give their opinions, feelings, and impressions. The focus group meetings were especially useful in getting immediate feedback on what people thought and how they talked about home copying issues. The meetings were also a preliminary test of respondents' reactions to proposed questions. Focus groups can help a surveyor identify additional topics of interest or change words and phrases that will be confusing to respondents.

According to previous studies, young people are major purchasers of prerecorded audio products and are very active in home taping. For these reasons SRBI and OTA felt it essential that the perspectives of young people be well represented in the focus-group discussions. Thus, while one focus group had all adults (persons over 18 years of age), the other had primarily young people (persons 15 through 22 years of age). In both groups, nearly all of the participants owned at least one tape player and had purchased a record, prerecorded cassette tape, or compact disc within the past 6 months. In addition, most of the participants also had at least one videocassette recorder in their household, and about half of them had access to a personal computer.

SURVEY DEVELOPMENT AND REVIEW PROCESS

The survey instrument itself was developed by SRBI and OTA staff with considerable input from outside advisors and reviewers. The open process used to develop the survey of home copying was based on public involvement techniques that are commonly used in OTA studies.

Roles *of Reviewers*

The *advisory panel,* as in most OTA studies, served the role of general review of the study. The panel included representatives of many of the relevant stakeholder groups, as well as technology experts and labor and consumer representatives.

Instrumental to the development of the survey was the survey *working group.* This group included a number of survey experts. Two members were familiar with earlier audiotaping studies, while the rest were unaffiliated with any earlier work related to the home-copying issue. In addition, there were members who were specifically expert in consumer behavior issues. The survey working group was designed to lend technical expertise in the development of the sampling plan, survey instrument, and analysis.

In addition, there were approximately 20 other *reviewers.* These included independent technical experts, representatives of stakeholder groups, as well as OTA contractors working on other aspects of the study. OTA staff mailed draft material to these reviewers, who returned comments in writing or by telephone. In addition, some reviewers attended meetings of the advisory panel and survey working group and contributed to the discussions.

Throughout this appendix, members of the above three groups are collectively referred to as '(reviewers" unless there is a particular reason to specify members of the advisory panel and survey working group separately.

The reviewers gave invaluable comments and advice as the survey instrument was developed. But the actual work of creating the survey instrument was performed by the survey contractor, SRBI, in consultation with OTA staff. Of course, OTA remains responsible for the final content of the survey instrument.

Major Points of Controversy Early in the Review Process

OTA staff and the survey contractor discussed early ideas for the sampling plan and conceptual framework of the survey at the initial meetings of both the advisory panel and the survey working group. In addition, the survey working group reviewed an early draft of the survey instrument at its first meeting.

Three major points of controversy arose during the initial meetings of the advisory panel and the survey working group. These had to do with the scope of the survey and the sampling plan. OTA originally planned to ask questions about audio, video, and computer copying in the same survey. The survey population was intended to be a nationally representative sample of 1,500 persons of age 10 and over. Some members of the survey working group and advisory panel (representing primarily the stakeholder groups on both sides) argued forcefully that OTA should focus only on audiotaping. They argued that audio, video, and computer copying were fundamentally different and could not be treated in the same survey. Audiotaping, according to their reasoning, was the problem currently of interest to the Congress. They held that OTA should conduct a detailed analysis of home audiotaping that would attempt to resolve the differences seen in previous studies. To this end, these reviewers considered that OTA should attempt to give a definitive answer to such questions as:

- How much audiotaping is done each year?
- How many sales of prerecorded, copyrighted material are displaced by home taping? and

. To what extent are sales of recordings stimulated by home taping?[1]

All reviewers agreed that OTA's original plan to include audio, video, and computer copying was extremely ambitious and would be difficult to accomplish in a single survey instrument. Most reviewers did, however, support OTA's goal of keeping the survey focus as broad as possible. Although audiotaping should be the primary topic of the study, most reviewers agreed that questions on videotaping and computer copying would help to form a better context for policy analysis, and would perhaps serve as a basis for future work. As it turned out, at a later stage of the survey development process, the section on computer copying had to be deleted because of questionnaire length.

In a related area of controversy, some reviewers suggested that the sample population should be 1,500 *audiotapes* rather than 1,500 members of the general public, only some of whom would be tapers. It would be possible, with a sample of all tapers, to ask more detailed questions and to make finer distinctions, for example, between heavy tapers and occasional tapers. These reviewers suggested that such an approach would make it possible for OTA to properly weight the responses and to make more accurate estimates of the amount of taping and the level of economic effects on the recording industry.

By the same token, some of the same reviewers objected to including opinion questions. They suggested that the OTA survey should focus on questions about audiotaping activity, and not include any questions about attitudes toward taping or toward intellectual property or opinions related to policy options. They pointed out that there would not be time, in an average 20 minute interview, to do a thorough study of audiotaping activity and a thorough opinion poll as well.

Most reviewers supported OTA's original plan to interview the general public and to include opinion and attitude questions. They felt, as did OTA staff, that only a study of the general public could give a clear picture of the extent of home taping and copying. Opinion questions give the opportunity to see what relationships exist between taping activity and attitudes toward intellectual property. Previous studies have not usually considered these two topics together.

Further, it is useful to understand major similarities and differences in attitude between tapers and other members of the public. If the attitudes of tapers and nontapers toward intellectual property are essentially similar, Congress may wish to take a different approach to new policy than it would if the attitudes are very different. In determining how effective potential policy alternatives will be, it is useful to gauge how acceptable they seem to the population as a whole as compared with their acceptability to a special interest group (e.g., people who make home audiotapes).

The final area of controversy dealt with accuracy. Some reviewers suggested that OTA would not be able to get accurate information from a survey on taping and copying activity. They suggested that some tapers, believing their actions to be illegal or immoral, would simply answer untruthfully. Other respondents would intend to answer truthfully, but their answers would be inaccurate owing to faulty recall and "telescoping."[2]

[1] Excerpted from: Robert S. Schwartz, McDermott, Will&Emory and member, survey working group; Joseph Smith, Oxtoby-Smith; Steven Brenner, Cornell, Pelcovits & Brenner, Consultants for Home Recording Rights Coalition; memorandum to Office of Technology Assessment, July 8, 1988, p. 4.

Telescoping refers to inaccuracy in remembering the time elapsed between events or the number of events in a time period. Often events that occurred outside the reference period are recalled as occurring within the reference period.

Some reviewers stated that OTA would not get accurate information about the number of records or tapes a respondent owned, for example, owing to faulty recall. The only way, they said, to determine how many homemade tapes a person has would be to count them during an in-person interview. These reviewers were particularly worried that if OTA used results of the survey to calculate economic harms to industry, the calculation would be inaccurate. A number of earlier studies have estimated losses to industry by extrapolating the number of hours of taped music (or the number of taped songs) in home tape libraries and multiplying that number by the price of purchased recordings. If OTA used such an approach, the results would be lower than actual, since people are most likely to underestimate the number of tapes in their libraries.

The problems of dishonesty, faulty recall, and telescoping were recognized to be problems of all survey research. Few reviewers thought that dishonesty would be a serious problem. In the experience of SRBI and other researchers, respondents are generally honest, even about sensitive issues, so long as the questions are phrased in a nonjudgmental way. The possibility of conflict between therespondents' behavior and belief could be minimized by asking behavioral and attitude questions at different times. For example, the OTA survey was designed to ask about taping behavior first; questions about beliefs and opinions, which might be considered somewhat judgmental, were clustered at the end of the survey.

Faulty recall and telescoping can be minimized but not eliminated. The way to minimize these problems is to concentrate on questions about a specific event (e.g., the last time the respondent purchased or used a certain object) or about a very recent time period (e.g., events in the past week or past month). The OTA survey focused on activities of the past week or month, or on the most recent and the next most recent experience of purchasing, listening, copying, etc. A few questions asking for annual estimates were retained, mainly for screening purposes (e.g., a person who had not viewed a videotape in the past year was considered a nonviewer and excused from further questions in that section) and to afford a general comparison with results from some previous studies.

The problem of faulty recall remained, of course. We could only expect that the answers to such questions as "Approximately how many audiotapes do you own?" would be only the respondent's best estimate, not absolute truth. As is discussed in the chapter on economic analysis, OTA's approach differed from that of earlier estimates of industry losses. For the purposes of this analysis, each respondent's best estimate was adequate.

Comments on Later Stages of Review

Eleven more drafts of the survey instruments were created, and there were three additional rounds of review following the initial meetings of the advisory panel and survey working group. Reviewers were invited twice more to comment on any aspect of the survey instrument, including possible inclusion, deletion, or rewording of questions. In the last round, immediately before the survey went into the field, reviewers were invited to screen the final survey questions for possible biases in the wording only.

The review procedure for the survey working group was the most detailed. After reading a draft of the survey, members submitted written comments and then participated in a l-hour (or sometimes, multi-hour) telephone conference call to discuss their comments in detail with OTA and SRBI staff. Several other reviewers, including representatives of stakeholder groups, also elected to submit detailed comments and to participate in conference calls. Other reviewers and advisory panel members presented briefer comments in writing or by telephone.

Some of the reviewers, specifically the survey research experts advising the Recording Industry Association of America, Inc. (RIAA) and the Home Recording Rights Coalition (HRRC), submitted sample questions that they thought should be included in the survey instrument. Some of these were very helpful to OTA in developing its own survey. For example, the series of questions about the most recent purchase of records, prerecorded cassettes and CDs was greatly improved by adopting a modified version of questions developed by the HRRC and its consultants.[3]

Some suggested questions from stakeholders could not be used, however, either because they went into a level of detail that was inappropriate for the OTA survey or because they would have introduced or exacerbated a bias in the survey. For example, HRRC and its consultants also offered an extensive and well-developed series of questions about taping of noncopyrighted material.[4]

These questions, designed to count every occasion of such taping, would have been useful if OTA had been attempting to calculate, for example, what percentage of audiotapes are used nationwide for purposes other than to tape copyrighted music. This had been done in some previous surveys. This was not OTA's objective, however, and the detailed information, while interesting, would have been inappropriate. The OTA survey includes a simpler section on taping of noncopyrighted material that is better balanced with the section on music taping and is more suitable for this study.

Comments of all reviewers were very helpful in removing biased and leading questions from the surveys.

---

[3]See, for example: Robert S. Schwartz, Joseph Smith, and Steven Brenner, personal communication, July 18, 1988.

[4]Ibid.

Appendix B
Survey Questionnaire

DESIGNATED RESPONDENT INTRODUCTION

Hello, I'm _____ from SRBI, the national statistical research organization in New York City. We are conducting a study for the Office of Technology Assessment of the U.S. Congress on home audio and video technology. The study will help to inform Congress about how the public uses home audio and video technology and their attitudes about some policy alternatives *in* these areas. Your answers will be treated as strictly confidential.

Let me begin by asking a few questions about home video technology.

1a. Do you currently have a videocassette recorder, a VCR, in your household?

Yes. . . . . .1 SKIP TO Q. 2
No. 2
Refused/Not Sure. .3

1b. Have you owned, borrowed or rented a VCR at any time In the past month?

Yes. . . . . .1 SKIP TO Q. 3
No. 2
Refused/Not Sure. .3

1c. Have you purchased a prerecorded videocassette, either for yourself or someone else in the past year?

Yes. . . . . .1 SKIP TO Q. 8b, PAGE 6
No. . . . . ..2 SKIP TO Q. 9, PAGE 7
Not sure. . . . 3 SKIP TO Q. 9, PAGE 7
Refused. . . . .4 SKIP TO Q. 9, PAGE 7

2. How many working VCRs do you currently have in your household?

None. 0
One. 1
Two. 2
Three or more. .3
Refused. , ...4

IF UNDER 17 YEARS OLD, SKIP TO Q. 9 (PAGE 7)

3. In the past month, on how many occasions have you (READ ITEM)?

Made a videotape with a home video camera, . . _____ None. . .00 Not sure. ..99

Rented a videotape from a club or store. . . . . _____ None. . .00 Not sure. ..99

Borrowed a videotape from a library. , ... _____ None. . .00 Not sure. ..99

Recorded a program from television. . . , ... _____ None. . .00 Not sure. ..99

Copied a prerecorded videotape. . . . . _____ None. . .00 Not sure. ..99

Purchased a prerecorded videotape. . . . . _____ None. . .00 Not sure. ..99

40. How many videotapes, including blank videotapes, would you say that you currently have in your household? Your best estimate is fine.

_____ NUMBER VIDEOTAPES

None. . . . . ..00 SKIP TO Q. 8a
Not sure. ...99

b. How many of these videotapes, if any, were purchased as prerecorded videotapes?

_____ NUMBER PRERECORDED TAPES

None. 00
Not sure. .99

c. How many videotapes do you have (in the household), if any, that were made with a home videocamera?

_____ NUMBER OF VIDEOCAMERA TAPES

None. 00
Not sure. . . .99

d. How many videotapes do you have (in the household), if any, that contain programs recorded from television or copied from other tapes?

_____ NUMBER OF HOMEMADE TAPES

None. 00
Not sure. . . .99

5a. When was the most recent time that you made or acquired a videotape, not including blank tapes?

Today. 0
Number of Days Ago. . . . . .1 ____
Number of Weeks Ago. . . . . .2 ____
Number of Months Ago. , , ..3 __ __ RECORD ON FLYSHEET
Number of Years Ago, ...4 __ RECORD ON FLYSHEET
Not sure. 5

IF 12 MONTHS OR MORE IN Q. 5A, SKIP TO AUDIO SECTION, PAGE 7

5b. Was that a prerecorded videotape that you purchased, a prerecorded tape that someone else purchased for you, a program that you recorded from TV, a videotape that you copied, or a videotape someone made for you?

Prerecorded tape you purchased. . . ..1 SKIP TO 6a
Prerecorded tape purchased for YOU. .....2 SKIP TO 6a
Program you recorded from TV. 3
Tape you copied . . . .4 SKIP TO 6c
Tape made for you. . . . .5 SKIP TO 6a
Videocamera tape (vol.). . . . .6 SKIP TO 6a
Never have acquired my own tape. . .....7 SKIP TO Q. 9, PAGE 7
Rented or borrowed (vol.). . . . .8 ERROR, REPEAT Q. 5a
Not sure. . . . .9 SKIP TO Q. 9, PAGE 7

5C. What kind of program were you recording?

_____

_____

5d. Did you make that tape to keep or to use only temporarily?

To keep. 1
Use temporarily. 2
Not sure. 3

5e, Did you use a new blank tape to make the recording or did you tape over another recording?

New blank tape. 1
Taped over. 2
Not sure. 3

6a. Not **counting recordings made from television or home videocameras, have you ever copied a videotape (prerecorded or home recorded) either for yourself or for someone else?**

Yes. 1
No. . . . . ..2 SKIP TO Q. 8a
Not sure. . . . . 3 SKIP TO Q. 8a

6b. When was the most recent time that you copied a videotape, either for yourself or someone else?

Today. 0
Number of Days Ago. . . . ...1 ____
Number of Weeks Ago. . . . . .2 ____
Number of Months Ago. . . . .3 __ **__ RECORD ON FLYSHEET**
Number of Years Ago. . . . ..4 __ **__ RECORD ON FLYSHEET**
Not sure. 5

IF 12 MONTHS OR MORE IN Q. 6B (5A IF NO 6B), SKIP TO Q. 7A

6c. Were you making that copy from a rented or purchased prerecorded tape or from a tape that you or someone else had made?

Rented or purchased tape. 1
Tape you/someone else had made. 2
Not sure. 3
Refused. 4

6d. Where did you obtain the tape that you were copying?

Own original. 1
Family. 2
Friend/co-worker. 3
Public library. 4
Video rental club/store. . .5
Other (SPECIFY)

_____ ..11
Not sure. , ...12

6e. Did you make that tape to keep or to use only temporarily?

To keep. 1
Use temporarily. 2
Not sure. 3

6f. Did you use a new blank videotape to make the recording or did you tape over another recording?

New blank. 1
Taped over. 2
Not sure. 3

6g. Why did you copy it? Anything else?

_____

_____

6h. To the best of your knowledge, could you have purchased that on prerecorded tape, if you had wanted?

Yes. 1
No. , , ...2
Not sure. . .3

7a. **In the past year, from about how many persons outside of your household, if any, have you borrowed videotapes?**

_____ NUMBER

None. . . . . ..0 SKIP TO Q. 8a
Not sure. . .99

7b. How often, if ever, do you borrow videotapes from persons outside of your household in order to copy them? Would you say at least weekly, at least monthly, a few times a year, rarely or never?

At least weekly. 1
At least monthly. . . . , .2
Few times a year. 3
Rarely. . . . . , ...4
Never. . . . . , , ...5
Not sure. 6

8a. **Have you ever purchased a prerecorded videocassette tape, either for yourself or someone else?**

Yes. 1
No. . . . . ..2 SKIP TO Q. 9, PAGE 7
Not sure. . . 3 SKIP TO Q. 9, PAGE 7

8b. When was the most recent time that you purchased a prerecorded videotape, either for yourself or someone else?

Today. 0
Number of Days Ago. . . . . .1 _____
Number of Weeks Ago. . . . . .2 _____
Number of Months Ago. . . ..3 . __
Number of Years Ago, ...4 . __
Not sure. 5

IF ONE MONTH OR MORE IN Q. 8b, SKIP TO Q. 9

8c. How many prerecorded videotapes did you purchase on that occasion?

_____ NUMBER

Not sure. ..99

AUDIO SECTION

Now, we'd like to change to some questions about music and home audio technology.

9. How important an activity **to you do you consider listening to music -- extremely important, quite important, slightly important, or not at all important?**

Extremely important. 1
Quite important. 2
Slightly important. 3
Not at all important 4
Not sure. 5

10. During the last seven days, approximately how much time did you spend listening to music on the radio and television?

_____ **HOURS** _____ **MINUTES**

None. 0
Not sure. . .99

11. **Not including music on radio and television, approximately how much time in the last seven days did you spend listening to music on records, audiotapes and CDs not including background music in public places (e.g., stores, offices, elevators, bars).**

_____ **HOURS** _____ **MINUTES**

None. 0
Not sure. . .99

12a. Which of the following types of audio equipment do you have in your home or car. Do you have a (READ ITEM)?

	12a Do Have	Q.12b MOST USED	
a. Record player.	1	1	
b. Cassette tape deck in a home stereo system.	2	2	
c. Cassette tape deck in a car.	3	3	
d. Compact disk player	4	4	
e. Walkman-type portable cassette player.	5	5	
f. Portable radio/tape player (Including boom box).	6	6	
g. None of the above.	7	7	SKIP TO Q. 14
h. Refused.	8	8	SKIP TO Q. 14
i. Not sure		9	

IF MORE THAN ONE ITEM 'HAVE" IN, Q. 12a ASK:

12b. Which of these audio systems or components do you use most frequently to listen to music on records, audiotapes or CDS? RECORD ABOVE.

IF ANY CASSETTE PLAYER REPORTED IN Q. 12a ASK:

72C. Do any of your cassette tape decks have two or more cassette drives (dual cassettes)?

Yes. 1
No. . . . . 2 SKIP TO Q. 13
Not sure. . . . 3 SKIP TO Q. 13

12d. Do any of your cassette recorders have a high speed dubbing or fast dubbing feature?

Yes. 1
No. 2
Not sure. . . 3

13. How would you describe the sound quality of your (ITEM FROM Q.12b) -- would you say it is excellent, very good, good, fair or poor?

Excellent. 1
Very good. 2
Good. 3
Fair. 4
Poor. 5
Not sure. 6

14. How important is It to you to get high quality sound when you listen to music? Is It extremely Important, quite important, slightly Important, or not at all important?

Extremely important. 1
Quite important. 2
Slightly important. 3
Not at all important 4
Not sure. 5

15. Now, I'd like to get your opinion of the sound quality of different types of recorded music, based on your experience, what you've read or what you have been told. Using a scale of 1 to 7, where 1 means really poor sound quality and 7 means really excellent sound quality, where would you rate the sound quality of (READ ITEM)

ROTATE LIST

	POOR SOUND						EXCELLENT SOUND	NOT SURE
( )Compact disks	1	2	3	4	5	6	7	8
( )LP records	1	2	3	4	5	6	7	8
( )45 records	1	2	3	4	5	6	7	8
( )Pre-recorded cassettes	1	2	3	4	5	6	7	8
( )Tapes copied from CDs	1	2	3	4	5	6	7	8
( )Tapes copied from LP records	1	2	3	4	5	6	7	8
( )Tapes copied from pre-recorded cassettes	1	2	3	4	5	6	7	8

16. When was the last time you listened to music on records, audiotapes, or CDs, not including radio or television or background music In public places (e.g. stores, offices, elevators, bars)?

Today, ...0
Number of Days Ago. . . ...1 ____
Number of Weeks Ago. ....2 __ __
Number of Months Ago. ...3 __ __
Number of Years Ago. ....4 __ __
Not sure. 5

IF 12 MONTHS OR MORE IN Q. 16, SKIP TO Q. 29

17. What kind of music were you listening to that time?

_____

_____

18. Where were you listening to it --- at home, in the car, at a friend's, at work, at school or somewhere else?

Home. 1
Car. 2
Friends. 3
Work. 4
School. 5
Other (SPECIFY)

_____ . . 11

19. How many other persons, if any, were listening to the music with you?

_____ PERSONS

None. 0
Not sure. . .99

20a, Were you listening to records, audiotapes or CDs? MULTIPLE RECORD IF NECESSARY

IF ONLY ONE FORMAT RECORDED IN Q. 20a, SKIP TO Q. 20c

20b. Which did you listen to last, on that occasion? SINGLE RECORD

20c. How many different (FORMAT IN Q. 20a/b) did you listen to that time?

	Q.20a TYPES LISTENED	Q.20b LAST LISTENED	Q. 20c NUMBER LISTENED	
Records. 1		1	_____	
Tapes. 2		2	_____	RECORD ON FLYSHEET
CDs. , ... ,3		3	_____	
Not sure. 4		4	99	

21. How long did you listen to (FORMAT IN Q. 20a/b) that time?

_____ HOURS _____ MINUTES

None. 0
Not sure. 99

22. Was the (record/tape/CD) yours or someone else's?
(IF MORE THAN ONE, USE LAST LISTENED)

Yours. 1
Someone else's. . . .2 SKIP TO 0.29
Don't recall. 3

23. How long had you had that recording?

Less than a day. 0
Number of Days .....1 ____
Number of Weeks . . . . .2 . __
Number of Months ....3 __ __
Number of Years .....4 __ __
Not sure. . . . . ,5

24a. How did you obtain that (record/tape/CD) -- did you buy it, borrow it, receive it as a gift, make it or something else?

Bought. . . . .1 SKIP TO Q.24d
Other household member bought (vol.). ..2 SKIP TO 0.29
Borrowed. . . . . .'. . . . .3 RECORD ON FLYSHEET
Given. . . . .4 RECORD ON FLYSHEET
Made. . . . .5 SKIP TO Q.25
Other (SPECIFY)

_____ 11

IF AUDIOTAPE IN Q. 20a/b and BORROWED OR GIVEN IN Q.24a, ASK Q. 24b
ALL OTHERS SKIP TO Q.29

24b. Was that a prerecorded audio cassette that someone had purchased or an audiotape that someone had made?

Prerecorded cassette purchased. 1
Audiotape someone had made. 2
Not sure. 3

24c. Who or where did you get it from?

Household member. . . . . ..,1 I
Other family. . . . .2 I
Friend/co-worker. . . . . .3 |=> SKIP 10 Q. 29
Library . . . .4 I
Store . . . .,.....5 I
Other . . . .11 |

24d. How much did you pay for it? Your best estimate is fine.

Less than $5. . . . .1 |
$ 5 - 9.99. . . . .,....2 |
$10 - 14.99. . . . .3 | Q. 29
$15 - $19.99. . ., ...4 |
$20 or more. . . . .5 |

Not sure. . . . . 6 |

25. Where did you obtain the music for that tape? MULTIPLE RECORD IF NECESSARY

Music on radio. 1
Music on TV. 2
Own prerecorded record/cassette/CD. 3
Someone else's record/cassette/CD. 4
Tape you had made. 5
Tape someone else had made. 6
Other (SPECIFY)
_____ 12
Not sure. . . . . ~ 13

26a Did the audiotape you made contain one or more whole LPs, cassette albums or CDs?

Yes, whole LPs/albums/CDs. 1
No. 2
Not sure. 3

26b. Did the audiotape you made (also) contain a mixture of selections from LPs, 45's, cassettes or CDs?

Yes, mixture. 1
No. 2
Not sure. 3

27. About how much of your personal time, in all, was taken up in assembling the materials and making that tape?

_____HOURS _____MINUTES

None. 0
Not sure. 99

28a. Do you recall what grade of audiotape you used to make that recording?

Yes, recall. 1
No. . . . .2 SKIP TO Q. 29
Not sure. . . . .3 SKIP TO Q. 29

28b . What grade of tape did you use?

Normal bias/ferric oxide/Type I. 1
High bias/chrome/Type II. 2
Metal tape/Type IV. 3
Other (SPECIFY)
_____ 4
Not sure. 5

29. People have different types of audio recordings. We'd like to know a little about the types of recordings that you own. Approximately how many (ITEM) do you own:

	NONE	RANGE 1-10	11-25	26-50	51-100	100+	NOT SURE
a. Compact disks.	1	2	3	1-	5	6	7
b. 45 Records.	1	2	3	4	5	6	7
c. LP Records.	1	2	3	4	5	6	7
d. Audiotapes. ....., ...	1	2	3	4	5	6	7

IF NO AUDIOTAPES IN Q.29d, SKIP TO Q. 30a
Of the audiotapes you own, how many are:

e. Pre-recorded audiocassettes.	1	2	3	4	5	6	7
f. Audiotapes that you have made, ...	1	2	3	4	5	6	7
9" Audiotapes someone else made for you.	1	2	3	4	5	6	7

IF "BOUGHT" IN Q.24a, SKIP TO Q.30b

30a. Have you ever purchased a record, prerecorded audiocassette or CD?

Yes. . . . . , .1
No. . . . . .2 SKIP TO Q. 38a
Not sure. . .3 SKIP TO Q. 38a

30b. When was the last time you purchased a *record,* prerecorded audiocassette or CD?

Today, ...0
Number of Days Ago. .....1 ____
Number of Weeks Ago. .....2 ____
Number of Months Ago. . ...3 __ __ RECORD ON FLYSHEET
Number of Years Ago. .....4 __ __ RECORD ON FLYSHEET
Not sure. . . . . ,5

IF 12 MONTHS OR MORE IN Q. 30B, SKIP TO Q. 38A

31. What did you buy on that occasion? How many?

Prerecorded audiocassettes. 1	_____	None. . . . .00 Not sure. .99 RECORD ON FLYSHEET
LP records. 2	_____	None. . . . .00 Not sure. .99
45 records. 3	_____	None. . . . .00 Not sure. .99
CDs. 4	_____	None. . . . .00 Not sure. .99
Not sure. 5		

32. What (was/were) the title of the recording(s) you purchased and the name of the performer or group? IF MORE THAN THREE, ASK FOR THE FIRST THREE.

	ITEM 1	ITEM 2	ITEM 3
TITLE:	_____	_____	_____
PERFORMER/GROUP:	_____	_____	_____ .
Not sure. . . . . ,. .0		0	0

33. Was the recording of (ITEM) on record, audiocassette or CD?

Record 1		1	1
Cassette 2		2	2
CD. , ... 3		3	3
Not sure. . , , . . .	4=>Q.37a	4=>Q.37a	4->Q.37a

34a. How much did you pay for it? Your best estimate is fine.

	ITEM 1	ITEM 2	ITEM 3
Less than $5. 1		1	1
$ 5 - 9.99. 2		2	2
$10 -14.99. 3		3	3
$15 -19. 99. 4		4	4
$20 or more. . . . . ,5		5	5
Not sure. 6		6	6

34b. At the time you bought this (record/cassette/CD) did you expect to tape from it?

Yes. 1		1	1
No. 2		2	2
Not Sure. 3		3	3

34C. Have you made a tape from this (record/cassette/CD)?

Yes. 1		1	1
No. 2		2	2
Not Sure. ,..., 3		3	3

35. Before buying (ITEM) , had you ever heard selections from the recording or by the performer before?

Yes. 1	1	1
No. . . . . .2=> Q.37a	2-> Q.37a	2=> Q.37a
Not sure. . . . . .3=> 0.370	3=> Q.37a	3=> Q.37a

36. Before buying it, had you heard the recording or the performer on:

ROTATE LIST

( )Radio or television. ...I	1	1
( )Live concerts. 2	2	2
( )Records, prerecorded cassettes or CDs. 3	3	3
( )Tapes made by you or others. 4	4	4

IF ONE MONTH OR MORE AGO IN Q. 30b, SKIP TO Q. 37e

37a. Not counting the purchase that you just told me about, when was the next most recent time you purchased a record, prerecorded cassette or CD?

Today. 0		
Number of Days Ago. 1	_____	
Number of Weeks Ago. 2	_____	
Number of Months Ago. 3	__	__ RECORD ON FLYSHEET
Number of Years Ago. 4	__ __	__ RECORD ON FLYSHEET
Not sure. 5		

IF 12 MONTHS OR MORE IN Q. 37a, SKIP TO Q. 37e

37b. What did you buy on that occasion? How many?

	NUMBER		
Prerecorded cassettes. 1	__ .	None. . . . .00 Not sure.. 99	RECORD ON FLYSHEET
LP records. 2	_____	None. . ..00 Not sure. .99	
45 records. 3	_____	None. . . . .00 Not sure. .99	
CDs. 4	_____	None. . . . .00 Not sure. .99	
Not sure. 5			

IF ONE MONTH AGO OR MORE IN Q.37a, SKIP TO Q. 37e

37c. On how many occasions, in all, have you purchased a record, pre-recorded cassette or CD in the past month?

_____ IF ONLY TWO, SKIP TO Q. 37e

Not sure. 99

37d. During the past month, how many (ITEM) would you estimate that you have purchased?

	NUMBER	
Prerecorded cassettes .. ..;	_____	None. . . . .00 Not sure. .99
LP records. . . , ...2	_____	None. . . . .00 Not sure. .99
45 records. 3	_____	None. . . . .00 Not sure. .99
CDs. 4	__ .	None. . . . .00 Not sure. .99

IF PRERECORDED CASSETTES PURCHASED IN Q. 31 OR Q. 37b, SKIP TO Q. 38a

37e. When was the last time that you purchased a prerecorded audiocassette?

Today. 0		
Number of Days Ago. . , ...1	____	
Number of Weeks Ago. 2	____	
Number of Months Ago. 3	. __	__
Number of Years Ago. . . . . ,4	.	__
Not sure. 5		
Never. 6		

38a. Has anyone ever given you a record, audiotape or CD as a gift?

Yes.. 1	
No. 2	SKIP TO Q. 40
Not sure. . . 3	SKIP TO Q. 40

38b. When was the last time that someone gave you one as a gift?

Today. . . . . ,0		
Number of Days Ago. 1	____	
Number of Weeks Ago. 2	____	
Number of Months Ago. 3	__	__ RECORD ON FLYSHEET
Number of Years Ago. 4	__	__ RECORD ON FLYSHEET
Not sure. 5		

IF 12 MONTHS OR MORE IN Q. 388, SKIP TO Q. 38E

38c. What did you receive on that occasion? How many?

	NUMBER		
Prerecorded audiocassette. .1	_____	None. . . . .00 Not sure..99	RECORD ON FLYSHEET
Home made audiotape, ...2	_____	None. . . . .00 Not sure. .99	
LP records. . . . . , ...3	_____	None. . . . .00 Not sure. .99	
45 records. 4	_____	None. . . . .00 Not sure. .99	
CDs. 5	_____	None. . . . 00 Not sure. .99	
Not sure. 6	_____		

IF ONE MONTH OR MORE IN Q. 38b, SKIP TO Q. 38e

38d. During the past month, on how many occasions, in all, did you receive a record, audiotape or CD as a gift?

_____ NUMBER

No others. . ..00
Not sure. 99

IF PRERECORDED CASSETTE TAPES REPORTED IN Q. 38c, SKIP TO Q. 40

38e. When was the most recent time, if ever, that you received a prerecorded audiocassette as a gift?

Today. 0
Number of Days Ago. .....1 ____
Number of Weeks Ago. .....2 . __
Number of Months Ago. ....3 . __ __
Number of Years Ago. .....4 __ __
Not sure. 5
Never. . . . . .

40. In the past year, have you used an audio recorder to tape music from either radio, television, records, tapes or CDs?

Yes. 1
No. 2
Not sure. ., ..3

410. In the past year, have you used an audio recorder to tape anything else at home, including voices, answering machine messages and dictation?

Yes. . . . , ...1
No. . . . . .2 SKIP TO Q. 43a
Not sure. . . . .3 SKIP TO Q. 43a

41b. Which, if any, of the following things have you recorded in the past year? (INTERVIEWER: CODE ONLY YES ANSWERS)

	Yes
a. Family member voices	1
b. Music performed by you, family members, or friends	2
c. Special occasions, like birthdays and weddings	3
d. Telephone answering machine messages	4
e. Letters, messages and reports for work or school	5
f. Messages or instructions for others	6
g. Meetings	7
h. Lectures, classes or sermons	8
i. Dictation for home or office	9
j. None of the above	10

IF NO 'YES" IN Q. 41b, SKIP TO Q. 43a

41c. When was the last time you made a recording of (this/any of these) type?

Today	0	
Number of Days Ago	1 _____	
Number of Weeks Ago	2 _____	
Number of Months Ago	3 __	__ RECORD ON FLYSHEET
Number of Years Ago	4 __	__ RECORD ON FLYSHEET
Not sure	5	

IF 12 MONTHS OR MORE IN Q. 41c, SKIP TO Q. 43a

41d. Do you recall what grade of audiotape you used to make that recording?

Yes, recall 1
No . . . . . 2 SKIP TO Q. 41f
Not sure . . . . . 3 SKIP TO Q. 41f

41e. What grade of tape did you use?

Normal bias/ferric oxide/Type I 1
High bias/chrome/Type II 2
Metal tape/Type IV 3
Other (SPECIFY)

_____ 4
Not sure 5

41f. Did you use a 30 minute, 60 minute, or 90 minute tape?

30 minute. 1
60 minute. 2
90 minute. 3
Other (SPECIFY)

_____ " " . . 4
Not sure. 5

IF ONE MONTH OR MORE IN Q. 41c, SKIP TO Q. 43a

42. During the past month, on how many occasions, in all, have you made an audio recording of any of these kinds?

_____ OCCASIONS

None. 0
Not sure. . . .99

43a. Have you ever made an audiotape of music from radio or television?

Yes. 1
No. . . . . ..2 SKIP TO Q. 44a
Not sure. . 3 SKIP TO Q. 44a

43b. When was the most recent time that you made an audiotape of music from radio or television?

Today. 0
Number of Days Ago. . . . ...1 ____
Number of Weeks Ago. .....2 ____
Number of Months Ago. ....3 __ __ RECORD ON FLYSHEET
Number of Years Ago. .....4 __ __ RECORD ON FLYSHEET
Not sure. 5

IF 12 MONTHS OR MORE IN Q. 43b, SKIP TO Q. 44a

43c. How many different tapes did you make on that occasion?

_____ Number

Not sure. . . .99

IF MORE THAN ONE TAPE MADE, ASK ABOUT LAST TAPE MADE

43d. Did you use a 30 minute, 60 minute, or 90 minute tape?

30 minute. 1
60 minute. 2
90 minute. 3
Other (SPECIFY)

_____ 4
Not sure. . . . . , .5

43e. Were you taping one or more whole albums or were you taping singles or selections from albums, or both?

Whole album. 1
Selections or singles. 2
Both. 3
Music video (vol.). 4
Televised concert (vol.). .5
Other (SPECIFY)

_____ . . 6
Not sure. 7

43f. Did you make that tape to keep or to use only temporarily?

To keep. 1
Use temporarily. . . .2
Not sure. 3

43g. Did you use a new blank audiotape to make the recording or did you tape over another recording?

New blank. 1
Taped over. 2
Not sure. 3

IF ONE MONTH OR MORE SINCE MOST RECENT TAPING IN Q. 43b, SKIP TO Q. 44a

43h. During the past month, on how many occasions, in all, have you made audiotapes of music from radio or television?

_____ OCCASIONS

Not sure. . .99
No other. . . 00

44a. Have you ever taped music from a record, prerecorded audiocassette or CD?

Yes. 1
No. . . . . ..2 SKIP TO Q. 54, PAGE 31
Not sure. . 3 SKIP TO Q. 54, PAGE 31

44b. When was the most recent time that you taped music from a record, prerecorded audiocassette or CD?

Today. 0
Number of Days Ago. . . ....1 ____
Number of Weeks Ago. .....2 ____
Number of Months Ago. ....3 __ __ . RECORD ON FLYSHEET
Number of Years Ago. .....4 __ __ RECORD ON FLYSHFET
Not sure. , ... , . . .5

IF 12 MONTHS OR MORE IN Q. 44b, SKIP TO Q. 54

44c. How many different tapes did you record onto on that occasion?

_____ NUMBER

Not sure. ...99

IF MORE THAN ONE TAPE IN Q. 44c, ASK ABOUT THE LAST TAPE.

44d. Were you taping one or more whole LPs, cassette albums *or* CDs?

Yes. 1
No. . . . . .,2 SKIP TO Q. 44k
Not sure. . . . . 3 SKIP TO Q. 44k

IF ANY WHOLE RECORDS, TAPE ALBUMS OR CDS COPIED, ASK:

44e. How many complete LPs, cassettes albums or CDs did you copy onto that tape?

One. 1
Two. 2
Three. 3
Not sure. . . ,4

ASK FOR EACH REPORTED IN Q. 44e

44f. What (was/were) the title of the albums(s) you taped and the name of the performer *or* group?

	ITEM 1	ITEM 2	ITEM 3
TITLE:	_____	_____	_ _ _ - - - . _ . _
PERFORMER:	_____	_____	_____ _____

Not sure. . . . . .

44g. Was the recording of (ITEM) on record, prerecorded cassette or CD?

	ITEM 1	ITEM 2	ITEM 3
Record	1	1	1
Prerecorded cassette. .	2	2	2
CD.	3	3	3
Not sure.	4	4	4

44h. Where did you get the (record/prerecorded cassette/CD) that you made the tape from? Did you own it, did you borrow it from members or a member of your household, another family member, a friend o, somewhere else?

	ITEM 1	ITEM 2	ITEM 3
Own original	1	1	1
Household member	2	2	2
Other family	3	3	3
Friend. . . . , ...4		4	4
Other (SPECIFY)			

44i. Did you get the lyrics or liner **notes to the recording from anyplace?**

Yes. 1		1	1
No. . . . . .2=>Q.44k		2=>Q.44k	2=>Q.44k

44j. Where did you get them?

44k. Were you (also) taping selections from LPs, singles, cassettes, or CDs onto that tape?

Yes. 1
No. . . . . .2 SKIP TO Q. 45a
Not sure, ... 3 SKIP TO Q. 45a

441. In taping these selections, how many (READ ITEM) did you use?

45 Records. . . . . /	Not sure. , .99
LP Records. . . . . /	Not sure. . .99
CDs. . . . . /	Not sure. . .99
Pre-recorded audio cassettes. . . . /	Not sure. ..99
Home-made audio tapes. . . /	Not sure. ..99

44m. Where did you get the original (records/tapes/CDs) to make the tape? Did you own them, borrow them from members of your household, another family member, a friend or did you get it somewhere else? RECORD ALL THAT APPLY

Own original 1
Household member 1
Other family 1
Friend. 1
Other (SPECIFY)

_____ 1

45a. Were you making the tape(s) for yourself, another member of your household or someone else?

Yourself. 1
Household member. ..2 SKIP TO Q. 45c
Someone else. . . . . .3 SKIP TO Q. 45c

45b. Did you make that tape to keep or to use only temporarily?

To keep. . . . . , .1
Use temporarily. 2
Not sure. 3

45c. Did you use a new blank audiotape to make the recording or did you tape over another recording?

New blank. 1
Taped over. ....,2
Not sure. 3

45d. Did you use a 30 minute, 60 minute, or 90 minute tape?

30 minute. . . . . , ...1
60 minute. 2
90 minute. 3
Other (sPECIFY)

_____ 4
Not sure. 5

45e. Do you recall what grade of tape you used to make that recording?

Yes, recall. . . . . , . . .1
No. . . . . .2 SKIP TO Q. 45g
Not sure. . . . . , . . .8 SKIP TO Q. 45g

45f . What grade of tape did you use?

Normal bias/ferric oxide/Type I. 1
High bias/chrome/Type II. . . . . , ...2
Metal tape/Type IV. 3
Other (SPECIFY)

_____ 4
Not sure. 5

45g. About how much of your personal time, in all, was taken up in assembling the materials and making the tape?

_____**HOURS** _____**MINUTES**

None. 0
Not sure. 99

45h. Why did you copy the recording? Anything else?

_____

_____

45i. To the best of your knowledge, could you have purchased a record, prerecorded cassette or CD **with the same material, if you had** wanted?

Yes. 1
No. . . . . .2 **SKIP TO Q. 450**
Not sure. . . .3

45j . Which of the following concerns, if any, were also important factors in your reason for making this tape?

	Important	Not Important	Not Sure
READ THOSE NOT VOLUNTEERED IN Q. 45h			
( )1. You wanted to protect your originals from damage or wear. 1		2	3
( )2. You wanted to be able to play the recording on a tape player. .1		2	3
( )3. You wanted to get better quality sound 1		2	3
( )4. It was less expensive than purchasing the recording. 1		2	3
( )5. You wanted a longer playing time. 1		2	3
( )6. You wanted to create a customized selection of music. 1		2	3
( )7. Buying the prerecorded music was inconvenient for you. 1		2	3
( )8. You already had a copy of the music in prerecorded form and didn't want to buy another. 1		2	3
( )9. The purchase price was higher than you were willing to pay for that recording. 1		2	3

45k. To the best of your knowledge, how much do you think it would have cost to buy that that material on record, prerecorded cassette or CD?

Less than $5. 1
$ 5 - 9.99. 2
$10 -14. 99. 3
$15 -19.99. 4
$20 or more. 5
Not sure. 6

451. If you had not been able to make that tape, do you think that you would have purchased (that recording/another copy of that recording) or not?

Would have purchased. .....1 SKIP TO Q. 45n
Would not. . . . . , ...2
Not sure. . . . ., ...,8 SKIP TO Q. 450

45m. Why not?

_____ SKIP TO Q. 450

45n. If you had bought that recording, would it have been in addition to other recordings you have purchased, or in place of other recordings you purchased?

In addition. 1
In place. 2
Not sure. 3

450. To avoid making it yourself, would you have been willing to pay someone else to make that tape for you?

Yes. 1
No. . . . . ..2 SKIP TO Q. 46a
Not sure. .3

45p. In that case, what is the most that you would have been willing to pay someone to make that tape for you, not counting the cost of the blank tape?

$ __ _ . _ _

None. 0
Not sure. . . . . , ...999

IF ONE MONTH. OR MORE AGO IN Q. 44b, SKIP TO Q. 47a

46a. Not counting the time you just told me about, when was the next most recent time that you made an audiotape from a record, prerecorded cassette or CD?

Today, ...0
Number of Days Ago. . . . . .1 ____
Number of Weeks Ago. . . . . .2 ____
Number of Months Ago. ....3 __ __
Number of Years Ago. . . . . .4 __ __
Not sure. 5

IF ONE MONTH OR MORE IN Q. 46a, SKIP TO Q. 47a

46b. During the past month, on how many occasions, in all, did you make an audiotape from a record, prerecorded cassette or CD?

__ __ NUMBER OF TAPING OCCASIONS

Not sure. ..99

47a. In the past year, from about how many persons outside of your household, if any, have you borrowed records, prerecorded cassettes or CDs?

_____

None. . . . ..00 SKIP TO Q. 48
Not sure. .99

47b. How often, if ever, do you borrow records, tapes or CDs from persons outside of your household in order to make copies? Would you say that you do that at least weekly, at least monthly, only few times a year, rarely or never?

Weekly. 1
Monthly. 2
Few times a year. 3
Rarely. 4
Never. 5
Not sure. , ...6

47c. Do you belong to any music swap clubs?

Yes. 1
No. 2
Not sure. . . .3

IF UNDER 17 YEARS OLD, SKIP TO Q. 54 (PAGE 31)

People tape from records, prerecorded cassettes and CDs for many reasons. They may make individual tapes for mare than one reason. I'm going to mention some reasons why people sometimes tape and ask if they are among the reasons why you have made tapes.

RANDOM START Q. 48 TO Q. 53

( )48a. Some people tape selections from several records, cassettes or CDs to create their own customized program of music on tape. Have you ever made a tape, mainly for this reason?

Yes. 1
No. . . . . .2 SKIP TO 49a
Not sure. . .3

48b. When was the last time you made a tape mainly for this reason?

Today. 0
Days ago. . . . . .1 ____
Weeks ago. . . . . .2 ____
Months ago. . . ..3 __ __
Years ago. . . . . .4 __ __
Not sure. .5

IF ONE MONTH OR MORE IN Q. 48b, SKIP TO Q. 49a
c. How many times in the past month have you made a tape mainly for this reason?

_____ NUMBER

Not sure. ..99

( )490. Some people make tapes of their own records, cassettes and CDs, in order to protect the originals from damage and keep them from wearing out. Have you ever made a tape of a record, cassette or CD that you owned mainly for this reason?

Yes. 1
No. . . . . .2 SKIP TO 50a
Not sure. . . 3 SKIP TO 50a

49b. When was the last time you made a tape mainly for this reason?

Today 0
Days ago. . . . . 1 ____
Weeks ago. . . . . 2 ____
Months ago. . . . . 3 __ __
Years ago. . . . . 4 __ __
Not sure. . .5

IF ONE MONTH OR MORE IN Q. 49b, SKIP TO Q. 50a

49c. How many times in the past month have you made a tape mainly for this reason?

_____ NUMBER
Not sure. 99

( )500. Some people make tapes of their own records, cassettes and CDs, so that they can play them in their car, Walkman or elsewhere. Have you ever made a tape of a record, cassette or CD that you owned mainly for this reason?

Yes. 1
No. . . . . .2 SKIP TO 51a
Not sure. . . 3 SKIP TO 51a

50b. When was the last time you made a tape mainly for this reason?

Today 0
Days ago. . . . . 1 ____
Weeks ago... . . . 2 ____
Months ago. . . . . 3 __ .
Years ago. . . . . 4 __ __
Not sure, . .5

IF ONE MONTH OR MORE IN Q. 50b, SKIP TO Q. 51a

50c. How many times in the past month have you made a tape mainly for this reason?

_____ NUMBER

Not sure. . .99

( )51a. Some people make tapes of their friends' records, cassettes and CDs so that they don't have to buy them. Have you ever made a tape mainly for this reason?

Yes. 1
No. . . . . .2 SKIP TO 52a
Not sure. ..3

51b. When was the last time you made a tape mainly for this reason?

Today 0
Days ago. . . . . 1 ____
Weeks ago. . . . . 2 ____
Months ago. . . . . 3 __ __
Years ago. . . . . 4 __ __
Not sure. . .5

IF ONE MONTH OR MORE IN Q. 51b, SKIP TO Q. 52a

c. How many times in the past month have you made a tape mainly for this reason?

_____ NUMBER

Not sure. . . .99

( )52a. Some people make tapes of other people's records, cassettes and CDs that they would like to listen to, but probably would not buy. Have you ever made a tape mainly for this reason?

Yes. 1
No. . . . . .2 SKIP TO 53a
Not sure. . .3 SKIP TO 53a

52b. When was the last time you made a tape mainly for this reason?

Today. ....,.... 0
Days ago. . . . . 1 __ __
Weeks ago. . . . . 2 ____
Months ago. . . . . 3 __ __
Years ago. . . . . 4 __ __
Not sure. . .5

IF ONE MONTH OR MORE IN Q. 52b, SKIP TO Q. 53a

52c. How many times in the past month have you made a tape mainly for this reason?

_____ NUMBER

Not sure. . .99

( )530. Some people make tapes of recordings because they think they can get better quality sound from a tape they make compared to one they could buy. Have you ever made a tape mainly for this reason?

Yes. 1
No. . . . . .2 SKIP TO 54
Not sure. ..3

53b. When was the last time you made a tape mainly for this reason?

Today 0
Days ago. . . . . 1 ____
Weeks ago. . . . . 2 ____
Months ago. . . . . 3 __ __
Years ago. . . . . 4 __ __
Not sure. . .5

IF ONE MONTH OR MORE, SKIP TO Q. 54

53c. How many times in the past month have you made a tape mainly for this reason?

_____ NUMBER

Not sure. . .99

54. I am going to read you some things that people sometimes do. For each, I'd like to know how acceptable you would feel this action to be. Using a scale of 1 to 7, where 7 means that the action is perfectly acceptable to do in your opinion and 1 means that the action is not at all acceptable to do, how would you rate the acceptability to you of (READ ITEM) or don't you have an opinion on that?

	Not at all Acceptable to do						Perfectly Acceptable to do	No Opinion
( )a. Making a taped copy for your own use of a record, cassette or CD that you own	1	2	3	4	5	6	7	8
( )b. Making a taped copy to give to a friend of a record, cassette or CD that you own..	1	2	3	4	5	6	7	8
( )C. Making a taped copy to sell of a record, cassette or CD that you own.	1	2	3	4	5	6	7	8
( )d. Making a taped copy for your *own* use of a complete record, cassette or CD that you borrowed	1	2	3	4	5	6	7	8
( )e. Making a taped copy for your own use of selections from several records, cassettes or CDs that. you borrowed	1	2	3	4	5	6	7	8

55. How familiar would you say that you are with copyright laws and their application to home audio taping? Would you say that you are -- extremely familiar, quite familiar, slightly familiar or not at all familiar?

Extremely familiar. . . . , ...1
Quite familiar. 2
Slightly familiar. 3
Not at all familiar. 4
Not sure. 5

IF UNDER 17 YEARS OF AGE, SKIP TO DEMOGRAPHICS (PAGE 33)

56. People have different views on how fair current practices of audio taping are for different groups. On a scale of 1 to 7, where 7 means perfectly fair and 1 means not at all fair, how fair would you consider (ITEM) or don't you have an opinion on that?

	Not at all Fair						Perfectly Fair	No Opinion
ROTATE LIST								
( )a. Present practices of home taping from records, pre-recorded audiocassettes and CDs are to the recording industry	1	2	3	4	5	6	7	8
( )b. Present practices of home taping from records, pre-recorded audiocassettes and CDs are to song writers and performers	1	2	3	4	5	6	7	8
( )c. present practices of home taping of records, audio-cassettes and CDs are to the average consumer	1	2	3	4	5	6	7	8

57. Now using the same scale running from 1, meaning not at all fair, to 7, meaning perfectly fair, I'd like to know how fair you think each of the following suggestions would be or don't you have an opinion?

	Not at all Fair						Perfectly Fair	No Opinion
( )a. New audio recorders should be built so they can't copy commercial recordings	1	2	3	4	5	6	7	8
( )b. Audio recordings should be made so they can't be copied	1	2	3	4	5	6	7	8
( )c. A fee should be charged on audio recorders and paid to copyright holders to compen-sate them for home taping	1	2	3	4	5	6	7	8
( )d. A fee should be charged on blank audiotapes and paid to copyright holders to compen-sate them for home taping	1	2	3	4	5	6	7	8
( )e. Current home taping practices should be left unchanged	1	2	3	4	5	6	7	8

DEMOGRAPHICS

Now, a few last questions for statistical purposes. . .

D1. How old are you?

__ __ age
Refused. ..99

D2a. Are you currently employed full time, part time, unemployed and looking for work, retired, going to school, keeping house or something else?

Employed full time. . . . . ((-1
Employed port time. . . . . — - 2
Unemployed and looking for work. . . . -3 SKIP TO D3
Retired. . . . . -4 SKIP TO D3
Going to school. . . . . -5 SKIP TO D3
Keeping house. . . . . -6 SKIP TO D3
Disabled (vol.). . . . . -7 SKIP TO D3
Other (SPECIFY).

_____ . . . . . -13 SKIP TO D3
Refused. . . . . — - 1 4

D2b. Do you use a computer at work?

Yes. 1
No. 2

D3. How many working computers, if any, do you have in your household?

None. 1
One. 2
Two. 3
Three or more. . .4
Refused. 5

04. What Is highest grade or year of regular school you have completed?

No formal schooling. 1
First through 7th grade. 2
8th grade. 3
Some high school. 4
High school graduate. 5
Some college. 6
Four-year college graduate. ...7
Some graduate school. 8
Graduate degree. ..., ...9
Refused. 10

D5. **Which of these categories best describes your racial background?**

White. 1
Black. 2
Asian or Pacific Islander. 3
Eskimo, Aleut or American Indian. 4
Other _____ . . . 5
Refused. 6

IF UNDER 17 YEARS OF AGE, SKIP TO 07

06. Which of the following categories best describes the total household income before taxes in 1987? Your best estimate is fine.

Nothing. 1
Less than $5,000. . .2
$5000 to $9,999.00 3
$10,000 to $19,999. .4
$20,000 to $29,999. 5
$30,000 to $39, 999. .6
$40,000 to $49, 999. .7
$50,000 to $74,999. .8
$75,000 to $99,999. .9
$100,000 or more. 10
Refused. 11

D7. How many persons, including both adults and children, live in this household?

__ __

Only respondent. ....1 SKIP TO D9
Refused. 99

IF UNDER 16 YEARS OLD, SKIP TO 09

08. Which of the following categories best describes how much you personally earned from all sources, before taxes, in 1987'?

Nothing. 1
Less than $5,000. 2
$5000 to $9, 999. . . .3
$10,000 to $19, 999. .5
$20,000 to $29,999. 5
$30,000 to $39,999. .6
$40,000 to $49,999. 7
$50,000 to $74,999. 8
$75,000 to $99,999. .9
$100,000 or more. 10
Refused. 11

IF OVER 16 SKIP TO D11

D9. Do you get an allowance from your family?

Yes. ., ...1
No. . . . . .2 SKIP TO D11

D10. How much is your allowance, per week? (ON AVERAGE)

$ — — _ " _ _
None. 0
Not sure. 999

FROM OBSERVATION

D11. Sex

Male. 1
Female. 2

Thank you for your assistance. That completes our interview.

Note: **State/Region is coded in Sample Point. Census designation as SMSA Central City or SMSA Remainder or Non-SMSA is coded in Sample Point.**

HOME TAPING FLYSHEET

AGE IS UNDER 16 _____ AGE IS OVER 17 _____

	1-11 MONTHS	12 MONTHS OR MORE
5a.	_____	_____
6b.	_____	_____
30b.	_____	_____
37a.	_____	_____
38b.	_____	_____
41c.	_____	_____
43b.	_____	_____
44b.	_____	_____

20a/b.	TAPES.	_____	OTHER	_____
24a.	BORROWED, GIVEN.	_____	BOUGHT	_____
31.	PRERECORDED CASSETTE	_____	OTHER	_____
37b.	PRERECORDED CASSETTE	_____	OTHER	_____
38c.	PRERECORDED CASSETTE	_____	OTHER	_____

Appendix C
OTA Survey Tables

The following tables are taken from the report Survey *of Home Taping and Copying Final Report (Vol. 2)* prepared for OTA by Schulman, Ronca, and Bucuvalas, Inc. Theta- ble numbers in this appendix correspond to the numbers in the SRBI report. Due to space limitations, tables have been abbreviated.

Table 2-1. - Importance of Music

Question 9: How important an activity do you consider listening to music–extremely important quite important, slightly important, or not important at all?

	Unweighed base	Extremely	Quite	Slightly	Not at all	Not sure
Total:	(1,501)	24	32	34	10	1
Age:						
10 14	(57)	27	20	41	12	
15-19	(118)	39	33	22	5	
20-24	(140)	36	34	24	7	–
25-29	(173)	22	35	34	9	–
3 0 - 3 4	(180)	20	29	40	8	2
3564.	(619)	21	32	35	13	
65+	(197)	16	35	34	12	4
Sex:						
M a l e	(594)	22	31	34	12	1
F e m a l e	(907)	25	33	33	9	1
Race:						
W h i t e	(1,288)	23	33	33	10	1
Black	(131)	32	23	32	11	1

Table 2-4. -Past Week Prerecorded Music-Listening

Question 11: Not including music on radio and television, approximately how much time in the lastseven**days** did you spend listening to music on records, audiotapes and **CDs,** not including background music in public places (e.g., stores, offices, elevators, bars).

	Unweighed base	None	Less 1 HR	1-3.5	3.5-7	7.-14	14-21	21-28	28-35	35+
Total ... , ...	**(1,501)**	**43**	**3**	**22**	**11**	**10**	**5**	**2**	1	**2**
Age:										
10-14, ., ...	**57)**	**18**	**12**	**28**	**14**	**14**	**4**	1	–	**8**
15-19 ..., . .	**118)**	**6**	**4**	**34**	**18**	**15**	**10**	**6**	**2**	**4**
20-24	**140)**	**28**	1	**16**	**17**	**15**	**12**	**3**	**3**	**4**
25-29	**173)**	**30**	**2**	**20**	**10**	**19**	**8**	**2**	**4**	**4**
3(-34	**180)**	**40**	**3**	**31**	**10**	**7**	**5**		•	1
35-64	**619)**	**53**	**3**	**21**	**10**	**8**	**3**	1	1	1
65+	**197)**	**71**	1	**13**	**5**	1	1	1	•	1
Sex:										
Male	**594)**	**40**	**3**	**23**	11	**10**	**6**	**2**	1	**2**
Female	**907)**	**45**	**3**	**21**	**10**	**9**	**5**	1	1	**2**
Race:										
White	**(1288)**	**43**	**3**	**22**	11	**10**	**6**	**2**	1	**2**
Black . . ., ... ,., (131)		**43**	**3**	**19**	11	**8**	**2**	**2**	1	**6**
Place:										
City	**(440)**	**46**	**2**	**20**	**12**	**10**	**6**	1	1	1
Suburb .., ,,, ,.	**(680)**	**39**	**3**	**25**	**11**	**9**	**5**	**2**	1	**3**
Rural	**(381)**	**46**	**5**	**20**	**9**	**11**	**3**	**2**	1	**2**
Region:										
East	**(311)**	**42**	**3**	**25**	**8**	**8**	**6**	1	*	**4**
Midwest	**(370)**	**46**	**2**	**20**	**15**	**9**	**3**	**2**	1	1
south.	**(519)**	**46**	**4**	**21**	**9**	**9**	**4**	**2**	1	**2**
West, ...,,..,..	**(301)**	**33**	**3**	**24**	**13**	**14**	**8**	1	**2**	**2**
Importance of music:										
Extremely . .	**(344)**	**22**	1	**17**	**17**	**14**	**13**	**3**	**2**	**7**
Quite	**(492)**	**36**	**2**	**25**	**14**	**12**	**5**	**2**	**2**	1
Slightly	**(506)**	**54**	**4**	**26**	**7**	**6**	1	1		–
None	**(148)**	**73**	**7**	**16**	1	**2**		–	–	1

Table 2-6. – Prevalence of Selected Audio Playback Equipment

Question 12a: Which of the following types of audio equlpment do you have in your home or car? Do you have a (READ ITEM)?

	Unweighed base	Record player	Tape deck Home	Tape deck Car	CD player	Walk man	Boom box	None
Total:	(1,501)	81	76	65	15	48	63	2
Age:								
10-14	(57)	88	91	75	17	65	73	–
15-19	(118)	86	94	74	23	79	79	–
2024	(140)	76	86	73	22	67	71	–
25-29	(173)	81	76	64	17	53	70	2
30-34	(180)	88	83	73	14	49	58	–
35-64	(619)	83	76	68	15	45	64	2
65 +	(197)	69	46	35	2	12	40	10
Sex:								
Male	(594)	81	77	70	18	51	62	2
Female	(907)	82	75	61	12	46	64	3
Race:								
White	(1288)	81	76	67	16	48	63	2
Black	(131)	83	74	49	9	49	67	3
Place:								
City	(440)	80	73	65	16	49	65	1
Suburb	(680)	83	79	65	15	52	63	2
Rural	(381)	79	75	65	14	40	61	4
Region:								
East	(311)	83	75	56	14	50	58	2
Midwest	(370)	77	73	60	13	49	61	3
south.	(519)	81	77	71	16	46	66	3
west,	(301)	85	78	71	17	49	66	2
Income:								
Less than $5,000..	(63)	54	57	36	9	28	57	16
$5,000” $9,999	(104)	76	58	34	11	27	49	4
$10,OOO $19,999	(238)	77	68	52	9	35	57	3
$20,000 $29,999	(258)	82	77	66	15	47	62	*
$30,00(-$39,999	(206)	81	74	65	14	47	60	3
$40,000 -$49,999	(140)	86	84	77	16	68	68	1
$50,000 -$74,999	(118)	92	81	90	26	56	70	1
$75,000 +	(65)	82	91	89	33	59	68	2

Table 2-7.-Changes in Home Playback Equipment: 1979-1988

	1979*	1988
Unweighed base:		(1,501)
Record player	78	81
Cassette players	38	94
Installed in home	20	76
Installed in auto	8	65
Portable	24	63
8-track player	43	NA
CD player	NA	15
None	17	2

*The Roper Organization, A Study m Tape Recording Practices Among the General Public, June 1979

NA = not applicable

Table 3-1 .–Most Recent Listening

Question 16: When was the last time you listened to music on records, audiotapes, or CDs, not inciuding radio or television or background music in public places (e.g., stores, offices, elevators, bars)?

	Unweighed base	Past week	Past month	Past year	A year or more	Not sure,
Total:	(1,501)	59	18	11	7	5
Age:						
10-14	(57)	79	17	4	–	–
15-19	(118)	92	7	*	1	–
20-24	(140)	79	11	6	2	2
25-29	(173)	66	9	19	3	3
3(-34	(180)	56	27	10	3	4
=-~,	(619)	52	21	13	9	5
65+	(197)	33	21	15	19	12
Sex:						
Male,	(594)	61	17	10	8	3
Female,	(907)	57	19	12	6	6
Race:						
White	(1,288)	60	19	11	6	4
Black	(131)	55	13	11	14	7
Place:						
City	(440)	56	18	13	9	4
Suburb	(680)	61	18	11	6	5
Rural	(381)	60	18	9	7	7
Region:						
East	(311)	57	17	13	7	6
Midwest,	(370)	56	17	15	8	5
South	(519)	58	20	11	7	5
West,	(301)	68	17	6	6	4

Table 3-7 (Abbreviated) .- Format Listened

Question 20a: Were you listening to records, audiotapes, or CDs? MULTIPLE RECORD

(Base: past year listened)

	Unweighed base	Records	Tapes	CDs	Mixed	Not sure
Total:	(1 ,326)	21	64	10	3	2
Age:						
10 14	(57)	16	78	4	–	2
15-19	(117)	13	72	10	4	
2(-24	(136)	16	64	15	4	1
25-29	(165)	22	57	14	6	1
30-34	(170)	23	60	12	4	1
35-64	(537)	20	65	9	3	2
65+.	(134)	32	57	2	3	6
Sex:						
Male	(533)	16	64	11	6	2
F e m a l e	(793)	24	64	8	2	2

Table 3-13 (Abbreviated).-Source of Recording

Qustions 24a: How did you obtain that (record/tape/CD) - did you buy it, borrow it receive it as a gift, make it, or something else?

	Unweighed base	self bought	Other bought	Bor-rowed	Given	Made	Other
T o t a l :	(1 ,012)	74	2	1	12	10	1
Age:							
10-14	(34)	58		8	15	18	
15-19	(89)	84		–	11	5	1
20-24	(107)	71	–	1	15	13	1
25-29.	(129)	77	2	1	11	10	
30-34	(136)	74	1	*	11	12	2
3564	(417)	74	3	.	12	9	2
6 5 +	(96)	77		2	17	4	
Sex:							
Male,	(410)	78	2	*	7	12	1
Female	(602)	71	1	2	17	7	2
Race:							
White	(886)	75	2	1	13	8	1
Black,	(69)	67	1	–	6	20	4

Table 3-15. -Contents of Audiotape Last Listened

Question 26a: Did the audiotape you made contain one or more whole LPs, cassette albums, or CDs?
Question **26b: Did the audiotape you made (also) contain a mixture of** selections from LPs, 45s, cassettes,**or CDs?**

	Mixture of Selections in Percent (N = 83)			
Whole albums .,	**Yes**	**No**	**Not sure**	**Total**
Yes	**23**	**29**	–	**51**
No	**33**	**13**		**46**
N.S.	1	–	**3**	**4**
Total	**56**	**21**	**3**	

NOTE: Totals may not add due to rounding

Table 4-2. - Most Recent Purchase

Question 30b: When was the last time you purchased a record, prerecorded audiocassette or CD?

	Unweighed base	Past week	Past month	Past year	A year or more	Not sure	Never
Total:	(1,501)	5	15	38	20	4	17
Age:							
10-14.	(57)	3	17	34	8	6	32
15-19.	(118)	16	29	44	8	1	3
20-24.	(140)	13	22	43	12	1	9
25-29.	(173)	5	21	45	18	4	7
30-34.	(180)	4	17	44	20	7	8
35-64	(619)	4	11	40	24	4	16
65+	(197)	•	6	22	30	4	37
Sex:							
Male	(594)	7	16	40	20	3	13
Female	(907)	4	14	37	21	5	20
Race:							
White	(1288)	6	15	39	20	4	15
Black	(131)	4	13	32	18	4	29
Place:							
city	(440)	5	18	39	18	4	17
Suburb	(680)	6	15	39	22	4	14
Rural	(381)	5	12	36	20	5	23
Region:							
East	(311)	6	14	34	22	3	22
Midwest	(370)	4	12	42	21	5	16
south,	(519)	6	17	37	18	5	17
West	(301)	6	16	41	22	3	12
Income:							
Less than 5,000.	(63)	3	2	36	24	5	30
$5,000-$9,999	(104)	1	7	24	30	7	30
$10,00(-$19,999	(238)	7	13	34	23	4	20
$20,000-$29,999	(258)	5	13	40	22	5	16
$30,000 -$39,999	(206)	4	13	44	26	1	11
$40$000-$49,999	(140)	7	16	47	18	2	10
$50,000-$74,999	(118)	9	22	39	17	7	6
$75,000+	(65)	10	21	54	6	3	6

Table 4-5. - Most Recent Purchase Occasion: Number by Format

Question 31: What did you buy on that occasion? How many?

	Cassettes	LPs	45s	CDs
	(635)	(153)	(22)	(108)
One	68	68	59	65
Two	17	16	9	20
Three	8	8	19	3
Four	3	2	–	9
Five +	3	5	13	3
Not sure	1	1	–	–
Mean	1.73	1.89	2.17	1.81

Table 5-1.-Past Year Taping

Questions 40: In the past year have you used an audio recorder to tape music from either radio, television, records, tapes or CDs?

	Unweighed base	Yes	No	Not sure
Torah	(1,501)	41	59	1
Age:				
10-14	(57)	80	20	–
15-19	(118)	77	19	3
20-24	(140)	59	39	1
25-29	(173)	45	54	•
3 0 - 3 4	(180)	45	55	–
35-64	(619)	29	71	1
65+	(197)	10	90	-
Sex:				
Male	(594)	44	56	1
Female	(907)	38	61	1
Race:				
White	(1,288)	40	60	1
Black	(131)	48	52	–
Income:				
Less than $5,000	(63)	32	68	–
$5,00(- $9,999	(104)	22	77	1
$10,000 C-$19,999	(238)	37	62	1
$20,000 -$29,999	(258)	35	64	•
$30,000-$39,999	(206)	31	69	–
$40,000 -$49,999	(140)	40	59	1
$50,000-$74,999	(118)	43	56	1
$75,000+	(65)	41	59	

Table 5-2.– Past Year Taping by Age: 1979-1988

Question 40: In the past year, have you used an audio recorder to tape music from either radio, television, records, tapes or CDs?

Question x: (ROPER) In the past twelve months, have you personally taped any music on a tape recorder?

	1979*	1988
Total:	22	40.8
10-13.	27.1	80.6
14-15	39.0	78.0
16-17.	32.1	81.9
18-29	31.9	53,9
30-44.	25.0	41.5
45-59	16.4	24.0
60+.	4.4	10,9

● The Roper Organization, A Sfudy on the *Tape Recording* Practices *of the General Public,* June 1979

Table 5-3.–Taping in Past 3 Months: 1982-1988

Question x:(YSW) **Do you ever tape music from records, prerecorded tapes, or the radio?**

Question x: (YSW) **How many of these tapes have you made in the last 3 months from records, prerecorded tapes, or the radio?**

	1982*	1988
Percent total population14 +	29	28
Percent tapers 14-	55	58

'Yankelovich, Skelly and White, Inc Why Americans *Tape: A Survey of Home Audio* **Taping in** *the United States,* September 1982

Table 5-4.–Past Year Taping Among Current Buyers: 1978-1988

Question 40: In the past year, have you **used an audio recorder to tape music from either radio, television, records, tapes, or CDs?**

	1978'	1988
Total	21	41
Current buyers	32	53

● Warner Communications Inc , The *PreRacorded Music* Market: An *Inventory Survey,* March 1978

Table 5-5.-Taping From Radio or **TV**

Question 43a: Have you ever made an audiotape of music from radio or television?

	Unweighed base	Yes	No	Not sure
Total:	(1,501)	45	54	1
Age:				
10-14	(57)	72	28	–
15-19	(118)	78	21	1
20-24	(140)	70	30	–
25-29	(173)	49	49	1
30-34,	(180)	43	56	1
35-64	(619)	36	63	1
65+	(197)	15	85	
Sex:				
Male	(594)	50	49	1
Female	(907)	40	59	•
Race:				
White	(1,288)	44	56	1
Black	(131)	58	42	•
Place:				
City	(440)	43	56	1
Suburb	(680)	50	49	1
Rural	(381)	38	61	
Region:				
East	(311)	50	49	1
Midwest	(370)	41	58	1
south	(519)	45	54	1
west., ,....,	(301)	44	55	•
Income:				
Less than $5,000	(63)	37	61	1
$5,000-$9,999	(104)	25	75	–
$10,000 -$19,999	(238)	41	58	1
$20,000-$29,999	(258)	48	51	1
$30,000 -$39,999	(206)	37	62	1
$40,000-$49,999	(140)	40	59	1
$50,000 -$74,999	(118)	48	51	1
$75,000+	(65)	42	56	1

Table 5-6. - Recency of Broadcast Taping

Question 43b: When was the most recent time you made an audiotape of music from radio or or television?

	Unweighed base	Past week	Past month	Past year	A year or more	Not sure	Never
Total:	(1,501)	5	6	16	17	1	55
Age:							
10-14	(38)	13	26	25	7		28
15-19	(90)	16	16	35	11	1	22
20-24.	(90)	12	7	22	26	4	30
25-29,	(82)	2	4	21	21	2	50
30-34	(74)	2	1	17	23	•	57
35-64	(211)	2	3	12	18	1	64
65+....	(26)	–	2	3	9	1	85
sex:							
Male	(295)	4	6	18	21	1	50
Female.	(321)	5	6	15	12	2	60
Race:							
White	(506)	4	6	14	18	1	56
Black	(76)	8	8	31	10	1	42
Income:							
Less than $5,000	(24)	4	2	19	10	2	63
$5,000- $9,999	(29)	1	2	10	11	1	75
$10,000 -$19,999	(29)	3	4	16	16	2	59
$20,000-$29,999	(111)	4	4	17	23	1	52
$30,000 -$39,999	(79)	3	1	12	21	1	63
$40,000-$49,999	(55)	2	5	16	15	2	60
$50,000 -$74,999	(54)	2	4	13	27	2	52
$75,000+	(26)	2	10	15	12	3	58
Refused	(54)	4	2	13	16	2	64

Table 5-7.-Number of Tapes Made: Most Recent Broadcast Taping

Question 43c: How many different tapes did you make on that occasion?

(Base: Past year tapers)

	Unweighed base	One	Two	Three	Four +	Not sure	Mean
Total:	(338)	84	10	2	1	3	1.21
Age:							
10-14	(33)	86	5	7	2	–	1.31
15-19	(74)	86	14	–			1.14
20-24.	(46)	95	3	1	1		1.09
25-29	(41)	85	12	–	3	–	1.23
30-34	(36)	89	9	–		2	1,10
35-64	(95)	75	12	1	2	10	1.30
65+,	(10)	81	14			5	1.15
Sex:							
Male	(155)	80	12	3	2	3	1,30
Female	(183)	88	8	1	1	2	1.13
Race:							
White	(254)	87	9	2	1	2	121
Black	(60)	75	14	2	1	8	1.23

Table 5-9.–Number of Broadcast Taping Occasions in Past Month: by Age Cohort

Question 43h: During the past month, on how many occasions, in all, have you made audio tapes of music from radio or television?

		Sum	Mean	Percent
Torah	(1,501)	712,9170	0.4749	
Age:				
10-14	(57)	232,1220	1.9530	32.6
15-19	(118)	217.9340	1.6750	30.6
2(-24	(140)	111.7000	0.8138	15.7
2 5 - 2 9	(173)	21,1070	0.1352	3.0
30-34	(180)	12,6790	0.0799	1.8
35-64	(619)	111,8030	0.1922	15.7
65+	(197)	4.8360	0.0232	0,7
NA	(17)	0.7360	0.0769	0.1

NA = not applicable

Table 5-10.-Total Broadcast Tapes: Past Month

Question 43c: How many different tapes did you make on that occasion?

Question 43h: During the past month, on how many occasions, In all, have you made audio tapes of music from radio or television?

	Total	Sum	Mean	Percent
Total:	(1,501)	850.3330	0.5665	
Age:				
10-14,	(57)	311.7490	2.6230	36,7
15 19	(118)	227.6360	1.7496	26.8
20 - 24 ,	(140)	134.7720	09819	15,8
25-29.	(173)	32.1720	02061	3 8
30-34	(180)	12.6790	0.0799	1.5
3564	(619)	125.0170	02149	14,7
6 5 +	(197)	4.8360	00232	0.6
NA	(17)	1.4720	0,1539	0.2

NA = not available

Table 5-12.– Recency of Taping From Prerecorded Format

Question 44b: When was the most recent time that you taped music from a record, prerecorded audio cassette or CD?

	Unweighed base	Past week	Past month	Past year	A year or more	Not sure	Never
Total:	(1,501)	4	6	18	19	2	50
Age:							
10-14	(57)	13	10	19	12	4	42
15 19	(118)	12	18	35	6	3	26
20-24	(140)	10	5	30	32	3	21
25 29	(173)	3	5	23	29	2	39
30-34	(180)	2	9	24	27	•	37
3564	(619)	1	4	14	20	2	58
6 5 +	(197)	1	1	2	11	1	85
Sex:							
Male	(594)	4	7	21	23	2	44
Female	(907)	4	5	16	16	2	56
Race:							
White	(1 ,288)	3	6	18	20	2	52
Black	(131)	10	7	20	19	3	41
Income:							
Less than $5,000	(63)	6	2	17	16	3	56
$5,000 $9,999	(104)	2	3	12	12		71
$10,000-$19,999	(238)	3	4	16	25	1	51
$20,000-$29,999	(258)	3	5	18	24	1	49
$30,000-$39,999	(206)	1	3	15	26	3	52
$40,000 $49,999	(149)	1	8	17	24	5	46
$50,000-$74,999	(118)	5	7	26	21	–	41
$75,000+	(65)	4	6	24	14	6	46

Table 5-13.-Number of Tapes Made

Question 440: How **many different tapes** did you record onto on that occasion?

(Base: **past year tapers)**

	Unweighed base	Number of tapes 1	2	3	4+	Not sure	Mean
Total:	**(406)**	**63**	**20**	**7**	**0**	**2**	1.84
Age:							
10-14	**(24)**	**56**	**24**	**8**	**12**	–	**2.28**
15-19	**(77)**	**65**	**24**	**3**	**7**	–	1.94
2(-24	**(58)**	**68**	**20**	**6**	**5**	1	1.54
25-29	**(52)**	**61**	**20**	**10**	**6**	**2**	**1.69**
30-34	**(61)**	**70**	11	**9**	**9**	1	**1.72**
35-64	**(127)**	**60**	**19**	**8**	**7**	**7**	**1.87**
65+	**(5)**	**86**	**14**	–	–	.	**1.14**
Sex:							
Male	**(198)**	**64**	**15**	**10**	**9**	**2**	1.96
Female	**(208)**	**63**	**25**	**3**	**6**	**3**	**1,71**
Race:							
White	**(324)**	**64**	**19**	**7**	**7**	**3**	**1.81**
Black	**(55)**	**65**	**20**	**2**	**12**	1	**2.00**

Table 5-17.–Total Tapes Made in the Past Month From Prerecorded Format

	Unweighed base	Sum	Mean	Percent
Total	(l,50l)	**736.4450**	**0.4906**	
Age:				
10-14	**(57)**	**256.0900**	**2.1547**	**34.8**
15-19	**(118)**	**156.1910**	**1.2005**	**21,2**
20-24	**(140)**	**57.3730**	**1.2005**	**7.8**
25-29	**(173)**	**41,3860**	**02651**	**5.6**
30-34	**(180)**	**52.8610**	**0.3331**	**7.2**
35-64	**(619)**	**166,5680**	**0.2864**	**22.6**
65+	**(197)**	**4.5040**	**0.0216**	**0.6**
NA	**(17)**	**14720**	**0.1539**	**0.2**

NA = not available

NOTE: **Two outliers reporting 10 or more tapes made on last taping occasion were coded as 10 tapes made, in this analysis**

Table 5-19. - Characteristics of Music Tapers

	Unweighed base	Prerecorded & radio	Prerecorded only	Radio onlv	None
Total:	(1,501)	16	12	11	61
Age:					
10-14	(57)	32	10	32	25
15-19	(118)	51	14	15	20
20-24	(140)	30	14	11	45
25-29	(173)	17	14	10	60
W-34	(180)	15	20	5	59
W-64	(619)	8	12	9	71
65+	(197)	1	2	5	92
Sex:					
Male	(594)	17	14	10	58
Female,	(907)	16	9	11	64
Race:					
White	(1,288)	15	11	9	65
Black	(131)	24	13	24	39
Place:					
City	(440)	15	11	11	62
Suburb	(680)	19	12	10	59
Rural	(381)	12	13	10	65
Region:					
East	(311)	17	9	12	62
Midwest	(370)	14	11	9	66
south	(519)	18	13	11	58
west	(301)	15	14	10	61
income:					
Less than $5,000	(63)	17	8	8	67
5,000- $9,999	(104)	4	14	10	73
$10,000 -$19,999	(238)	13	10	10	67
$20,000 -$29,999	(258)	12	14	12	61
$30,000 -$39,999	(206)	9	10	6	75
$40,00 -$49,999	(140)	13	13	10	64
$50,000 -$74,999	(118)	15	23	4	58
$75,000+	(65)	17	16	10	57

Table 5-20. - Music Interest by Past Year Taping

Question 9: How Important an activity do you consider listening to music–extremely important, quite **important, slightly important** or not at all important?

fQuestion 10: During the last 7 days, approximately how much time did you spend listening to music on the radio and television?

Question 11: Not including **music** on radio and television, approximately how much time **in the last 7 days did you spend listening to music on records, audiotapes and CDs, not including background music in public places (e.g., stores, offices, elevators, bars).**

	Total	Past year taping: Broadcast only	Recording only	Both	Neither
	(1,501)	(126)	(194)	(212)	(969)
Importance of music:					
Extremely	24	35	23	45	16
Quite	32	25	34	31	33
Slightly	34	33	38	21	36
Not at all	10	7	5	2	14
Radio listening:					
None	7	3	8	4	9
Less than 1 hr.	4	5	3	1	4
1-5 hrs.	31	27	22	22	35
6-10 hrs.	20	22	28	19	19
11-19 hrs.	11	8	10	12	11
20 or more hrs.	24	34	27	39	18
Recording listening					
None	43	30	20	13	57
Less than 1 hr.	3	6	3	3	2
1-5 hrs.	31	42	44	38	26
6-10 hrs.	10	10	12	15	8
11-19	5	5	8	12	3
20 or more hrs.	6	5	12	18	2

Table 5-23.-Number of Past Month Tapings From Records, Cassettes or CDs by
Recency of Recording Purchase

	Sum	Percent	Cumulative
Total:	738,445		
Last purchase of a record, cassette or CD:			
Past week	304,960	41.4	41.4
Past month	108,303	14.7	56.1
Past year	232,108	315	87.6
A year or more	22.543	3.1	90.7
Not sure	7.957	1.1	91.8
Never	60.574	8.2	100.0

Table 6-1 (Abbreviated) .-Album or Selection Taping: Broadcast

Question 430: **Were you taping one or more whole albums or were you taping singles or selections from albums or both?**

(Base: made tape in past year)

	Unweighed base	Whole	Selections/ singles	Both	Music video	Televised concert	Other	Not sure
Total: ...	**(338)**	8	56	15	2	3	13	3
Age:								
10-14 ....,	**(33)**	–	58	2	2 –	–	17	3
15 19, ...,	**(74)**	6	64	13			13	4
~-24 ., .,	**(48)**	8	58	18	3	6	7	–
25-29. , . . .,	**(41)**	13	48	22	8	–	9	.
30 34	**(36)**	11	46	5	4	4	24	5
35-64 . . . .,	**(95)**	13	56	10	2	4	10	5
6 5 +	**(10)**	5	47	9	–	25	15	·

Table 6-3 (Abbreviated).– Album Taping: Prerecorded

Question 44d: Were you taping one or more whole LPs, cassettes, albums or CDs?

(Base: Past year tapers)

	Unweighed base	Yes	No	Not sure
Total:	**(406)**	70	28	2
Age:				
1 0 1 4	**(24)**	84	16	·
15-19 : : : : : : : : : : : : : : : : :	**(77)**	63	37	·
20 24	**(58)**	64	33	3
25-29, ...	**(52)**	76	20	4
W-34	**(61)**	73	27	–
35-64	**(127)**	67	27	6
65+	**(5)**	59	41	–

Table 6-5.–Album vs. Selection Taping: Total Last Taping

Question 44k: Were you taping selections from LPs, singles, cassettes, or CDs onto that tape?

Questions 44d: Were you taping one or more whole LPs, cassette albums or CDs?

	Whole LPs			
Selections	**Yes**	**No**	**Not sure**	**Total**
Yes, ... 21	21	•		43
No . . . . . ,,	48	6	1	55
Not sure ,. . .	1	*	1	2
Total, ,,, ... 70	28	2		
(N = 406)				

Table 6-10 (Abbreviated) .-Source of Original: Album

Question 44h: Where did you get the (record/prerecorded cassette/CD) that you made the tape from? Did you own it, did you borrow it from members or a member of your household, another family member● friend or somewhere else?

(Base: **Taped whole LP/cassette/CD)**

	Unweighed base	Own original	House -hold member	Other family	Friend	Other
Total:	(279)	57	3	4	29	2
Age:						
10-14	(19)	24	1	2	58	–
15-19	(52)	54	8	4	32	–
20-24	(37)	59	2	5	32	–
25-29,	(38)	61	1	10	25	2
30-34	(41)	79	–	1	12	3
35-64	(88)	61	5	2	22	6
65+.	(3)	100	–	–	–	

Table 6-12 (Abbreviated).-End User of Copy

Question **45a: Were you making the tape(s) for yourself, ● nether member** of your household, or someone else?

(Base: **Made tape in past year)**

	Unweighed base	Yoursetf	Other household member	Someone else	Not sure
Total:	(406)	73	7	19	1
Age					
10-14	(24)	84	–	16	–
15-19	(77)	66	7	27	–
20-24	(58)	77	5	17	1
25-29	(52)	76	3	18	2
30-34	(61)	74	9	17	
35--64.	~~~~~[(127)	69	12	18	1
65+	(5)	80	–	20	

Table 7-1. - Why Copied

Question 45h: **Why** did you copy the recording? Anything else? (verbatim response)

(Base: **made copy in past year)**

	(406)
Wanted a tape for automobile	21
Wanted music/liked album (unspec.)	21
Wanted to give to friend/acquaintance/co-worker	14
Can edit/choose what selections to hear/put different selections together/create personal selection of music	6
Wanted to give to family member	6
Wanted to protect originals/keep from wearing out	3
Wanted a tape for Walkman type player	3
Less expensive than buying the recording/cheaper to copy	3
Not willing to buy it,	3
Needed/wanted it for school/class	2
Replace an original	2
Wanted to be able to play it on a tape player (unspec)	2
Prefer cassettes/tape format (reason not specified)	1
Don't have a record player/CD player,	1
Wanted a tape for personal stereo	1
Can record more selections on 1 tape	1
Can't buy original/not available/can't find original	1
Wanted better quality of sound (unspec)	1
Don't like the quality of prerecorded tapes	1
Don't like it enough to buy/not that interested	*
More convenient than buying it,	*
Already had a copy/don't need another copy	•
Could not afford to buy it	•
To sell	0
All other mentions	10
Don't know/not sure.	2

Table 7-2.-Could Have Purchased

Question **45l:** To the **best of your knowledge,** could you have purchased a record, prerecorded cassette, or CD with the same material, if you had wanted?

	Unweighed base	Yes	No	Not sure
Total:	(406)	57	40	4
Age:				
10-14	(24)	56	44	–
15-19 ., .,	(77)	65	30	
2(-24	(58)	54	43	3
25-29	(52)	67	29	5
30-34	(61)	65	35	–
35-64	(127)	45	50	5
6 5 *	(5)	3	20	27
Sex:				
Male	(198)	55	42	3
Female	(208)		59	37
Race:				
White	(324)	6	40	4
Black	(55)	58	41	2

Table 7-3.-Other Factors in Making Tape

Question 45i: **Which of the following concerns, if any, were** also important factors in your reason for making this tape?

(Base: **could have purchased)**

	Unweighed base	Important	Not important	Not sure
You wanted to protect your originals from damage or wear .	(234)	42%	56%	2%
You wanted to be able to play the recording on a tape player	(234)	86	12	2
You wanted to get a better quality sound	(234)	42	55	2
It was less expensive than purchasing a recording	(234)	63	34	2
You wanted a longer playing time. . ., .,	(234)	46	51	3
You wanted to create a customized selection of music	(234)	57	42	2
Buying the prerecorded material was inconvenient for you .	(234)	39	58	2
You already had a copy of the music in prerecorded form and didn't want to buy another .,	(234)	51	46	2
The purchase price of the recording was higher than you were willing to pay for that recording	(234)	41	54	4

Table 7-4. - Reasons for Making Tapes

(Base: **adults who have taped in past year)**

	Past week	Past month	Past year	Total
Unweighed base:	**(38)**	**(66)**	**(240)**	**(343)**
50a. Some people make tapes of their own records, cassettes, and CDS, so that they can play them in their car, Walkman or elsewhere. Have you ever made a tape of a record, cassette, or CD that you owned mainly for this reason?	**78%**	**90%**	**7996**	**81%**
46a. Some people tape selections from several records, cassettes, or CDs to create their own customized program of music on tape, Have you ever made a tape, mainly for that reason?	**82**	**82**	**61**	**67**
49a. Some people make tapes of their own records, cassettes, and CDs, in order to protect the originals from damage and keep them from wearing out. Have you ever made a tape of a record, cassette, or CD that you owned mainly for this reason?	**44**	**50**	**46**	**46**
51a. Some people make tapes of their friends' records, cassettes, and CDs so that they don't have to buy them. Have you ever made a tape mainly for that reason?	**30**	**48**	**41**	**41**
52a. Some people make tapes of other peoples' records, cassettes, and CDs that they would like to listen to, but probably would not buy. Have you ever made a tape mainly for this reason?	**33**	**46**	**34**	**36**
53a. Some people make tapes of recordings because they think they can get better *quality sound* from a tape they make compared to one they could buy. Have you ever made a tape mainly for this reason?	**13**	**26**	**16**	**17**

Table 8-2.-Likeiihood of Purchase

Question 451: **If you** had not been able to make that tape, do you think that you would have purchased (that recording/another copy of that recording) or not?

	Unweighed base	Would have purchased	Would not	Not sure
Total.' ., ..., .	**(234)**	**49**	**47**	**4**
Age:				
10-14 ....., ., ...	**(12)**	**84**	**16**	
15-19	**(53)**	**61**	**36**	**4**
20-24	**(33)**	**54**	**37**	**9**
25-29, ..., .	**(36)**	**33**	**67**	
30-34. . . . . ,,	**(37)**	**41**	**58**	
35-64,,.	**(60)**	**29**	**63**	**8**
65+ . . . . . ,...,,	**(3)**	**63**	**37**	
Sex:				
Male	(108)	**50**	**47**	**3**
Female	(126)	**48**	**47**	**5**
Race				
White . . . . . .,,.,	**(182)**	**48**	**49**	**3**
Black	**(34)**	**47**	**45**	**8**
Income:				
Less than $5,000, . . , . ,	**(10)**	**26**	**66**	**8**
$5,000- $9,999	**(7)**	**18**	**74**	**8**
$10,OO-$19,999 .	**(31)**	**40**	**60**	
$20,000-$29,999	**(45)**	**51**	**47**	**2**
$30,00(-$39,999	**(22)**	**43**	**49**	**8**
$40,000 -$49,999	**(26)**	**26**	**70**	**3**
$50,00-$74,999	**(29)**	**34**	**60**	**6**
$75,000+ .. ..:::::::::: :: ':::.,	**(10)**	**47**	**53**	**–**

Table 8-3.-Would Purchase

Question 45a: Were you making the tape(s) for yourself, another member of your household, or someone else?

Question 451: **if you had not been able to make that tape, do you think that you wouid have purchased (that recording/another copy of that recording) or not?**

Making tape for:		Yes	No	Not sure
Yourself	**(164)**	**53**	**44**	**3**
Household member . . . . . .,.,	**(25)**	**32**	**57**	11
Other	**(45)**	**42**	**54**	**4**

Table 8-5. - Purchase Displacement

Question 45n: If you had bought that recording, would it have been In addition to other recordings you have purchased, or In place of other recordings you have purchased?

	Unweighed base	In addition	In place	Not sure
Total ., ..., ...	(104)	77	19	4
Age:				
10-14, ...	(10)	62	31	7
15-19 .., ...	(28)	82	18	–
~-24	(18)	88	6	6
25-29 ...., ...	(12)	75	25	–
30-34.....,,., ...	(15)	83	17	
35-64	(19)	72	18	10
65+	(2)	00	–	–
Sex:				
Male.. ., ..., ., ...	(51)	84	11	5
Female. , ...	(53)	70	29	2
Race:				
White	(81)	73	23	5
Black	(14)	98	2	–

Table 8-11.–Heard Before Buying on...

Question 36(l): Before buying it, had you heard the recording or the performer on: radio or television, live concerts, records, prerecorded cassettes or CDs,tapesmadebyyouorothers?

	Total	Record	Cassette	CD
	(897)	(170)	(611)	(98)
Radio or TV	79	83	79	78
Live concert	21	18	22	24
Prerecorded records, cassettes, CDs	53	53	52	64
Tapes made by you or others	24	30	22	27

Table 8-13.-Taping Expectations for Most Recent Purchase

Question 34b(1): At the time you bought this (record/cassette/CD) did you expect to tape from it?

	Total	Record	Cassette	CD
	(894)	(167)	(620)	(104)
Yes, expected to tape	14	35	8	16
No, did not expect to	81	63	91	82
Not sure	1	2	1	1

Table 8-14.-Have Taped **Most** Recent Purchase

Question 34C: Have you made a tape from this (record/cassette/CD)?

(Base: past year purchasers)

	Unweighed base	Yes	No	Not sure
Total:	(897)	11	87	1
Age:				
10-14,	(33)	28	72	–
15-19	(102)	11	85	2
2(-24	(108)	16	81	–
25-29	(127)	9	89	
3034.	(124)	9	90	
3564.	(348)	8	90	1
65+	(51)	2	94	–

Table 9-1.–Voice Recording in Past Year

Question 41a: in the past year, have you used an audio recorder to tape anythingelse (other than music from either radio, television, records, tapes, or CDs) at home, including voices, answering machine messages, and dictatlon?

	Unweighed base	Yes	No	Not sure
Total:	(1,501)	32	67	*
Age:				
10-14.	(57)	49	51	–
15-19	(118)	53	46	1
20 24	(140)	42	57	1
25 29.	(173)	36	64	
30-34.,	(180)	36	64	
35 64..	(619)	29	70	1
65 +	(197)	9	91	
Sex:				
Male	(594)	33	67	*
Female	(907)	32	68	•
Race:				
White	(1,288)	33	67	•
Black	(131)	34	66	

Table 9-3. - Recency of Voice Taping

Question 41C: **When was the last time you made a** recording of (this/any of these) type?

	Unweighed base	Past week	Past month	Past year	Year or more	Not sure	Never
Total:	(1,501)	9	7	13	2	1	68
Age:							
10-14	(57)	10	10	17	7	2	54
15-19	(118)	11	14	25	5	–	46
20-24	(140)	16	10	15	1	–	58
25-29	(173)	14	3	12	3	2	66
30-34	(180)	7	11	13	3	1	64
35-64	(619)	9	6	13	1	1	72
65+	(197)	2	2	2	1	1	93
sex:							
Male	(594)	10	7	11	2	1	69
	(907)	8	7	14	2	1	68
Race:							
White	(1,288)	9	6	13	2	1	68
Black	(131)	6	12	13	2		66
Income:							
Less than $5,000	(57)	5	2	7	4	–	83
$5,000- $9,999	(104)	6	3	6	1	–	83
$10,000 -$19,999	(238)	3	7	9	1	1	79
$20,000-$29,999	(258)	9	6	13	1	1	71
$30,000-$39,000	(206)	10	5	11	1	*	73
$40,000-$49,999	(140)	13	7	19	3	1	57
$50,000-$74,999	(118)	11	12	14	1	1	62
$75,000-$99,999	(37)	30	1	12	3	–	55
$100,000 or more	(28)	12	11	6	–	5	67
Refused	(173)	10	2	9	2	1	75

Table9-4. - Number of Voice Taping Occesionsin Past Month

Question 42: During the past month,on how many occasions, in all,haveyou made an audiorecording of any of these kinds?

	Unweighed base	None	1-2	3-4	5-1o	11-30	31+	Not sure
Total	(1,501)	84	5	2	2	4	1	1
Age:								
10-14	(57)	80	7	2	1	4		6
15-19	(118)	76	6	9	4	3	1	2
20-24,	(140)	74	7	2	8	8	1	1
25-29	(173)	84	4	2	2	5	2	•
30-34	(180)	82	7	4	2	4	*	•
35-64	(619)	86	5	2	2	4	1	1
65+	(197)	96	2	–	1	1	*	•

Table 9-9. – Proportion of Taping Occasions for Voice Taping

	Unweighed base	Percent
Total:	(1,501)	73
Age:		
10-14	(57)	36
15-19	(118)	46
20-24	(140)	73
25-29	(173)	94
30-34	(180)	85
35-64	(619)	85
65+	(197)	88

Table 10-6.-Number of Made Tapes in Inventory by Dual Cassettes

Question 29f: Of the audio tapes you own, how many are audio tapes that you have made?

		Dual cassettes			
	Unweighed base	Yes	No	Not asked	Not sure
Number of audio tapes					
None	(611)	24	57	14	5
1-10	(432)	51	44	3	2
11-25	(162)	50	47	2	1
26-50	(101)	48	49	2	1
51-100	(42)	42	58	–	–
100+	(26)	65	30	–	4
Not sure	(40)	32	39	18	10

Table 10-7. - Number of Made Tapes by Fast Dubbing

Question 29f: Of the audiotapes you own, how many are audiotapes that you have made?

(Base: **have dual cassette)**

	Unweighed base	Fast dubbing		
		Yes	No	Not sure
Number of made tapes:				
None	(142)	59	24	18
1-10	(232)	62	25	13
11-25	(82)	76	21	4
%-50	(50)	71	20	9
51-100	(18)	72	18	10
100+	(17)	84	2	14
Not sure	(14)	58	31	11

Table 11-1. –Familiarity With Copyright

Question 55: How familiar would you say that you are with copyright laws and their application to home audiotaping? Would you say that you are–extremely familiar, quite familiar, slightly familiar, or not at all familiar?

		Past year music taping			
	Total	None	Broadcast	Prerecorded	Both
How familiar	(1501)	(969)	(126)	(194)	(212)
Extremely	6	5	6	5	8
Quite	17	15	17	16	24
Slightly	42	41	49	46	43
Not at all	34	38	28	31	25
Not sure	1	1	1	1	1

Table n-2.-Acceptability of Taping Practices: Total

Question 54: I am going to read you some things that people sometimes do. For each, I'd like to know how acceptable you would feel this action to be. Using a scale of 1 to 7, where 7 means that the action is *perfectly acceptable* to do in your opinion and 1 means that the action is not at all *acceptable* to do, how would you rata the acceptability to you of (READ ITEM) or don't you have an opinion on that?

	Not at all acceptable to do						Perfectly acceptable to do	No opinion
	1	2	3	4	5	6	7	8
a Making a taped copy for your own use of a record, cassette, or CD that you own .,	7		2	5	10	8	57	9
b Making a taped copy to give to a friend of a record, cassette, or CD that you own ., .,	13		5	7	12	11	40	8
c. Mailing a taped copy to sell of a record, cassette, or CD that you own	67	6	3	3	5		5	8
d Making a taped copy for your own use of a complete record, cassette, or CD that you borrowed	15		5	7	14	10	38	8
e. Making a taped copy for your own use of *selections* from several records, cassettes, or CDs that you borrowed	13	2	6	7	13	11	40	8

Unweighted base= 1,501

Table 1 l-3. -Acceptability of Taping Practices by Taping Behavior

Question 54: I am going to read you some things that people sometimes do. For each, I'd like to know how acceptable you would feel this action to be. **Using** a **scale of 1 to 7, where 7** means that the action is perfectly acceptable **to do in your opinion a nd 1** means that the **actionils not at all acceptable to** do, how would you rate the acceptability to you of (READ ITEM) or don't you have an opinion on that?

	Past year music taping (mean score)				
	None	Radio only	Prerecorded only	Radio and prerecorded	Signif - icance
	(850)	(121)	(190)	(208)	
a. Making a taped copy for your *own use* of a record, cassette, or CD that you own	5.6	6.1	6.4	6.5	*
b. Making a taped copy to give to a friend of a record, cassette, or CD that you own	4.8	5.4	5.4	5.8	•
c. Making a taped copy to sell of a record, cassette, or CD that you own	1.6	2.1	2.0	2.6	
d. Making a taped copy for your own use of a *complete* record, cassette, or CD that you borrowed	4.6	5.2	5.5	5.8	•
e. Making a taped copy for your own use of *selections* from several records, cassettes, or CDs that you borrowed	4.8	5.4	5.5	6.1	•

● Difference of means between Past Year Taper and No Past Year Taper (none) is statistically significant at the O 05 level with two-tailed t–test.

Table n-5.-Fairness of Current Practices: Total

Question 56: People have different views on how fair current practices of audio taping are for different groups. On a scale of 1 to 7, where 7 means perfectly fair and 1 means not at all fair, how fair do you consider (ITEM) or don't you have an opinion on that?

(Base: 17 years or older)

	Not at all fair						Perfectly fair	Not sure
	1	2	3	4	5	6	7	8
a. Present practices of home taping from records, prerecorded audiocassettes, and CDs are to the *recording industry . .*	17	4	9	9	13	7	19	23
b. Present practices of home taping from records, pre-recorded audiocassettes, and CDs are to *song writers and performers . , . , . ,*	17	5	8	10	13	6	19	22
c. Present practices of home taping from records, audiocassettes, and CDs are to the *average consumer . .*	9	3	6	10	16	8	26	23

Unweighted base= 1,366

Table n-8.-Attitudes About Changes: Total

Question **57: Now using the same scale running from 1, meaning not at all fair, to 7, meaning perfectly fair, I'd like to know how fair you think each of the following suggestions would be or don't you have** an **opinion?**

(Base: 17 years or older)

	Not at all fair						Perfectly fair	Not sure
	1	2	3	4	5	6	7	8
a. New audio recorders should be built so they can't copy commercial recordings	42	8	6	6	5	3	14	15
b Audio recordings should be made so they can't be copied	41	7	7	6	6	4	17	12
c. A fee should be charged on audio recorders and paid to copyright holders to compensate them for home taping .,	42	7	8	6	7	3	11	16
d A fee should be charged on blank audiotapes and paid to copyright holders to compensate them for home taping ., ...	48	6	5	7	6	3	8	16
e. Current home taping practices should be left unchanged	7	1	4	6	10	7	46	19

Unweighted base: 1,386

Table 11-9.–Attitudes About Changes by Taping Behavior

Question 57: Now using the same scale running from 1, meaning not at all fair, to 7, meaning perfectly fair, I'd like to know how fair you think each of the following suggestions would be or don't you have an opinion?

	Past year music taping (mean score)				
	None	Radio only	Prerecorded only	Radio and prerecorded	Signif-icance
	(759)	(92)		(166)	(154)
a. New audio recorders should be built so they can't copy commercial recordings . . . .,	3,2	2.8	2.2	2 2	
b Audio recordings should be made so they can't be copied ., ...	3.5	3.0	2.5	2 2	
c A fee should be charged on audio recorders and paid to copyright holders to compensate them for home taping	3.0	2.4	2.3	2,4	
d. A fee should be charged on blank audiotapes and paid to copyright holders to compensate them for home taping	2.6	2.2	2.4	2 2	N.S.
e Current home taping practices should be left unchanged ... ., .	5.4	6.1	6.0	61	*

● Difference of means between Past Year Taper and No Past Year Taper (None) is statistically significant at the O 05 level with two-tailed t-test

N S = not sure

Table 12-8.-Most Recent Acquisition: Type of Tape

Question 5b: Was that a prerecorded videotape that you purchased, a prerecorded tape that someone else purchased for you, a program that you recorded from IV, ● videotape that you copied, or a videotape someone made for you?

(Base: **Past year acquisition)**

		Prerecorded purchased by		Program recorded	Tape copied by		Video camera	Never acquired	Not
		Self	Other	from IV	Self	Other	tape	tape	sure
Total:	(717)	23	4	54	2	10	3	2	2
Age:									
17-19	(37)	22	3	46	3	24	–	1	2
20-24	(84)	21	6	53	5	13	.		3
25-29	(91)	16	3	64	2	11	3		1
30-34	(1 18)	27	2	53	5	5	6	•	1
35-64	(351)	24	3	54	1	7	4	5	1
65+	(31)	15	4	52	–	24	4	–	1
P/ace:									
city	(210)	20	3	57	1	8	3	6	2
Suburb	(341)	23	5	55	3	9	4	–	1
Rural	(166)	25	2	49	3	15	1	3	2
Region:									
East	(152)	21	3	55	2	10	3	6	–
Midwest	(166)	23	2	55	5	8	4	1	2
south	(234)	24	4	52	1	14	3	•	2
west	(165)	21	6	58	2	5	3	3	1
Income:									
Less than $5,000	(22)	16	5	53	11	5	–	11	–
$5,000- $9,999	(27)	43	–	47	–	10		–	–
$10,000-$19,999	(92)	30	•	52	3	9	1	5	1
$20,000-$29,999 ~	(132)	21	3	49	4	12	4	5	3
$30,000-$39,999	(130)	21	3	56	4	12	2	–	2
$40,000 -$49,999	(93)	21	7	56	–	11	3	2	–
$50,000-$74,999	(89)	26	2	55	2	8	5	–	1
$75,000+	(46)	19	7	54	–	7	11	2	

Table 12-10.-Permanent v. Temporary Use: Tapes Recorded From Television

Question 5d: **Did you make that tape to keep** or to use only temporarily?

	Unweighed base	Keep permanently	Keep temporarily	Not sure
Total:	(388)	35	62	3
Age:				
17-19,	(16)	52	4a	–
2(-24	(44)	39	58	3
25-29	(55)	38	61	1
30-34	(68)	42	55	4
35-64	(189)	30	67	3
65+	(15)	41	59	–
Place:				
city	(121)	38	59	3
Suburb	(186)	36	62	2
Rural	(81)	31	64	5
Region				
East	(88)	36	60	4
Midwest	(94)	28	69	4
south	(121)	35	62	3
West	(85)	44	56	–
Income:				
Less than $5,000..,	(11)	58	42	
$5,000-$9,999	(15)	45	55	
$10,000-$19,999	(48)	34	66	–
$20,000-$29,999	(67)	38	60	2
$30,000-$39,999	(74)	43	57	1
$40,00(-$49,999	(53)	28	65	6
$50,00(-$74,999	(49)	26	63	11
$75,000-	(23)	25	75	

Table 12-11. – Permanent v. Temporary Use by Program Type

Question 5c: What kind of program were you recording?

Question 5d: Did you make that tape to keep or to use only temporarily?

	To keep	To use temporarily	Not sure
Movie	44	51	4
Soaps/soap opera	3	97	–
Comedy series/sit-com	21	79	
Dramatic series	27	73	
Mini-series	52	39	9
Sports/sporting events	18	80	1
Cartoons	88	12	
Other children's programs	32	68	–
Daily/nightly/weekend news	–	100	–
News specials	29	71	
Documentaries (unspecified)	55	45	
Current events programs	–	100	
Talk shows	21	79	
Educational programs	62	38	–
Science programs	24	51	24
Home repair/car repair/how to	100	.	–
Concert/music video/music special	80	20	–
Other variety/entertainment programs	62	38	–
Other specials	100	.	–
All other, ,,...,.	40	60	
Don't know/not sure	–	78	22

Table 12-12.-Ever Copied Prerecorded Videotape

Question 6a: Not counting recordings made from television or home videocameras, have you ever copied a videotape (prerecorded or home recorded) either for yourself or for someone else?

(Base: **past year tape acquisition)**

	Unweighed base	Yes	No	Not sure
Total:	(693)	20	80	•
Age:				
17-19	(35)	18	82	–
20-24	(82)	24	76	
25-29	(90)	22	78	
3(-34,	(115)	25	73	1
3564	(337)	18	81	1
65+	(30)	6	94	
Race:				
White	(613)	19	81	1
Black	(48)	32	68	
Sex:				
Male	(278)	23	77	–
Female	(415)	17	82	1
Income:				
Less than $5,000	(20)	16	84	
$5,000-$9,999	(27)	3	97	
$10,000-$19,999	(87)	19	81	
$20,000-$29,999	(127)	20	80	
$30,00-$39,999	(127)	22	78	
$40,000-$49,999	(92)	24	76	
$50,00(-$74,999	(88)	20	79	1
$75,0004	(44)	21	79	

Table 12-19.-Most Recent Copy: Could Have Purchased on Prerecorded

Question 6h: To the best of your knowledge, **could you have purchased that on prerecorded tape, if you had wanted?**

(Base: copied within past year)

	Unweighed base	Yes	No	Not sure
Total:	(93)	35	57	8
Age:				
17-19	(3)	–	76	24
20-24	(14)	45	52	4
25-29	(14)	52	48	–
30-34	(19)	31	61	8
35-64	(40)	27	61	12
65+	(2)	67	33	–
Place:				
city	(26)	37	59	4
Suburb	(44)	42	55	3
Rural	(23)	15	58	27
Region:				
East	(23)	30	62	8
Midwest	(27)	41	4a	11
south	(22)	45	46	8
west	(21)	17	77	6

Table 12-21.–Ever Copied Prerecorded Video Tape: Music Tapers

Question 6A: Not counting recordings made from television or home videocameras, have you ever copied **a videotape (prerecorded or home recorded) either for yourself or for someone else?**

(Base: acquired tape in past year)

	base	Yes	No	Not sure
Total	(693)	20	80	•
No music taping in past year	(407)	12	88	*
Taping from radio only	(62)	16	84	–
Taping from records/ tapes/CDs only	(114)	30	88	2
Taping from both broadcast & pre-recorded formats	(110)	39	80	1

Table 12-22 .- Most Recent Acquisition: Music Tapers

Question 5b: Was that a prerecorded videotape that you purchased, a prerecorded tape thats omeone else purchased for you, a program that you recorded from IV, a videotape that you copied, **or a** videotape someone made for you?

(Base: acquired tape in past year)

	Base:	Prerecorded purchased by self	Program recorded from TV	Tape copied by self	Tape copied by other
Total	(717)	23	54	2	10
No music taping in past year	(22)	27	49	2	10
Taping from radio only	(65)	18	68	—	4
Taping from records/ tapes/CDs only	(16)	16	60	3	8
Taping from both broadcast & prerecorded formats	(1 14)	18	59	4	14

Appendix D
List of Contractor Reports

Contractor Documents: Volume I

Schulman, Ronca, and Bucuvalas, Inc.
— *Survey of Home Taping and Copying: Final Report, Vol. 1: Executive Summary,* Feb. 10, 1989.

— *Survey of Home Taping and Copying: Final Report, Vol. 2: Detailed Findings on Home Audio-taping,* Feb. 9, 1989.

— *A Supplementary Report on Home Videocassette Copying and Taping,* Feb. 16, 1989.

Contractor Documents: Volume II

William R. Johnson
Estimating the Effect of Copying on the Demand for Original Creative Works, i&r. 3, 1989.

Michael L. Katz
— *Home Copying and Its Economic Effects: An Approach for Analyzing the Home Copying Survey,* Mar. 9, 1989.

Fred L. Mannering
— *Consumer Welfare and Audio Home-Copying Restrictions: An Empirical Assessment,* Feb. 13, 1989.

NOTE: Copies are available from the National Technical Information Service, 5285 Port Royal Road, Springfield, VA 22161-0001. Telephone: (703) 487-4650.