Civilian Space Stations and the U.S. Future in Space

November 1984

NTIS order #PB85-205391

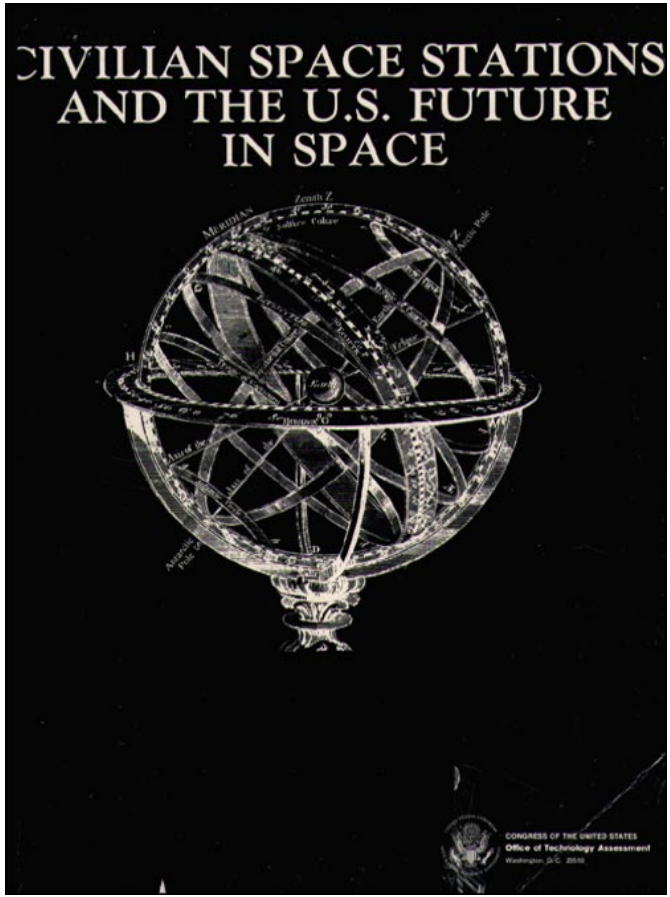

Recommended Citation:

Civilian Space Stations and the U.S. Future in Space (Washington, DC: U.S. Congress, Office of Technology Assessment, OTA-STI-241, November 1984).

Library of Congress Catalog Card Number 84-601136

For sale by the Superintendent of Documents
U.S. Government Printing Office, Washington, D.C. 20402

Foreword

I am pleased to introduce the OTA assessment of Civilian *Space Stations and the U.S. Future in Space.* This study was requested by the Senate Committee on Commerce, Science, and Transportation and the House Committee on Science and Technology, and the request was endorsed by the Senate Committee on Appropriations and the House Committee on the Budget.

The study was designed to cover not only the essential technical issues surrounding the selection and acquisition of infrastructure in space, but to enable Congress to look beyond these matters to the larger context; the *direction* of our efforts. Given the vast capability and promise available to the country and the world because of the sophisticated space technology we now possess, equally sophisticated and thoughtful decisions must be made about where the U.S. space program is going, and for what purposes.

The Advisory Panel for this study played a role of unusual importance in helping to generate a set of possible space goals and objectives that demonstrate the diverse opportunities open to us at this time, and OTA thanks them for their productive commitment of time and energy. Their participation does not necessarily constitute consensus or endorsement of the content of the report, for which OTA bears sole responsibility.

It often happens that information generated during the course of an OTA study can be used as legislation moves through Congress. A number of statements presented in Senate and House hearings by OTA and a technical memorandum drawn from the analysis have already contributed to the course of the debate. This report, the culmination of the OTA process, is now a resource for both Congress and the National Commission on Space, which Congress has created in order to give full and fundamental review to the basic questions of charting our course. It is OTA'S hope that the publication of the study will also expand the circle of those who can effectively engage in the debate and contribute to the decision process.



JOHN H. GIBBONS
Director

Civilian Space Stations and the U.S. Future in Space Advisory Panel

Robert A. Charpie *Chairman*
President, Cabot Corp.

Harvey Brooks
Benjamin Peirce Professor of Technology and Public Policy
Harvard University

Peter O. Crisp
President
Venrock, Inc.

Freeman Dyson
Professor
Institute for Advanced Studies

James B. Farley
Chairman of the Board
Booz-Allen & Hamilton, Inc.

Charles E. Fraser
Chairman
Sea Pines Co.

Andrew J. Goodpaster
President
Institute for Defense Analyses

Charles Hitch
Professor
The Lawrence-Berkeley Laboratory
University of California, Berkeley

Bernard M. W. Knox
Director
Center for Hellenic Studies

Moya Lear
Chairman of the Board
Lear Avia Corp.

George E. Mueller, Jr. *
President and Chief Executive Officer
System Development Corp.

Carl Sagan
Director of the Laboratories for Planetary Studies
Cornell University

Eugene Skolnikoff
Director
Center for International Studies
Massachusetts Institute of Technology

James Spilker
President
Stanford Telecommunications Inc.

Frank Stanton
President Emeritus
CBS Inc.

James A. Van Allen
Head, Physics and Astronomy Department
University of Iowa

OTA appreciates the valuable assistance and thoughtful comments provided by advisory panel members at many points during the assessment. OTA, however, accepts sole responsibility for the views expressed in this report.

*Retired.

OTA Civilian Space Stations and the U.S. Future in Space Project Staff

John Andelin, *Assistant Director, OTA*
Science, Information, and Natural Resources Division

William F. Mills* and Nancy Naismith, ** *Science, Transportation, and Innovation Program Manager*

Thomas F. Rogers, *Project Director*

Philip P. Chandler, *Deputy Project Director*

R. James Arenz, *Senior Analyst*

Randolph H. Ware, *Congressional/ Fellow*

Paula Walden, *Research Assistant*

Marsha Fenn, *Administrative Assistant*

R. Bryan Harrison, *Office Automation Systems Analyst*

Betty Jo Tatum, *Secretary*

Contractors

Lewis White Beck
Charles G. Bell
Hubert Bortzmeyer
Eva Brann
William Capron
Computer Sciences Corp.
William Schneider, *Principal Iinvestigator*
Arthur Danto
Leonard David
Eagle Engineering
Hubert Davis, Sr., *Principal Iinvestigator*
Marc Giget
Jerry Grey
JML, Inc.
John Logdson, *Principal /investigator*
Courtland Lewis
Charles Mathews
Peter Ognibene
Nicholas Rescher
Alex Roland
Satellite Systems Engineering
Wilbur Pritchard, *Principal Iinvestigator*
Kenneth Sayre
Science & Technology Consultants
Russell Drew, *Principal Iinvestigator*
Jerome Simonoff
Eugene Skolnikoff
Teledyne Brown Engineering
James E. Wilson

*Through September 1983.
* *After September 1983.

Contributors

James Arnold, University of California/ California Space Institute
James M. Beggs, National Aeronautics and Space Administration
William Bumgarner, Computer Sciences Corp.
Ashton Carter, Massachusetts Institute of Technology
William F. Cockburn, Embassy of Canada
Anthony Cox, Embassy of the United Kingdom
David Criswell, University of California/ California Space Institute
Troy Crites, Aerospace Corp.
Philip Culbertson, National Aeronautics and Space Administration
Richard Dal Belle, Office of Technology Assessment
Maxime Faget, Space Industries
James Fletcher, University of Pittsburgh (Member of Technology Assessment Advisory Council)
Robert F. Freitag, National Aeronautics and Space Administration
Robert Frosch, General Motors Corp.
Karl Harr, Aerospace Industries Association
John Barrington, Communication Satellite Corp.
Allen Hill, Boeing Aerospace Corp.
John Hedge, National Aeronautics and Space Administrate ion
Saunders Kramer, U.S. Department of Energy
Louis Laidet, Embassy of France
Gordon Law, Office of Technology Assessment
Robert Lottmann, National Aeronautics and Space Administration
John McElroy, National Oceanic and Atmospheric Administration
Wilfred Mellors, European Space Agency, Washington Office*
William Perry, Hambrecht & Quist (Member of Technology Assessment Advisory Council)
Irving Pikus, National Science Foundation
Udo Pollvogt, MBB/Erno
Luther Powell, National Aeronautics and Space Administration
Ian Pryke, European Space Agency
Eberhardt Rechtin, Aerospace Corp.
James Rose, McDonnell Douglas
Joseph E. Rowe, Library of Congress
Hans Traumann, Embassy of the Federal Republic of Germany
Ernesto Valierani, Aeritalia
Charles Vick, Consultant
David C. Wensley, McDonnell Douglas
Ray Williamson, Office of Technology Assessment
Gordon Woodcock, Boeing Aerospace Corp.

*** Retired**

Participants in U.S.S.R. Workshop, Dec. 13, 1982

Craig Covault
Aviation Week & Space Technology

Philip E. Culbertson
Associate Deputy Administrator
NASA Headquarters

Merton Davies
The Rand Corp.

Ed Ezell
National Museum of American History
Smithsonian Institution

John R. Hilliard
Air Force Systems Command Headquarters
Andrews Air Force Base

Nicholas Johnson
Principal Technologist
Teledyne Brown Engineering

Saunders Kramer
Consultant

Courtland Lewis
Biotechnology, Inc.

James E. Oberg
Consultant

Kenneth S. Pederson
Director
International Affairs Division
NASA Headquarters

Geoffrey Perry
Consultant

Paul Rambaut
NASA Headquarters

p. Diane Rausch
NASA Headquarters

Marcia Smith
Specialist in Aerospace and Energy Systems
Science Policy Research Division
Library of Congress

Participants in Skylab Workshop, Jan. 25, 1983

Leland Belew
Consultant

David Compton
Contractor
History Office
NASA/Johnson Space Center

John Disher
Consultant

Herbert Friedman
Chairman
Commission on Physical Sciences, Mathematics and Resources
National Academy of Sciences

Owen Garriott
Astronaut
NASA/Johnson Space Center

Roger Hoffer
Professor
Department of Forestry and Natural Resources
Purdue University

Kenneth Kleinknecht
Manager
Procurement, Manufacturing and Tests for Spacecraft Systems
Martin Marietta Corp.

Charles Mathews
Consultant

Edmond Reeves
Chief
Astrophysics Payload Branch
Spacelab Flight Division
NASA Headquarters

William Schneider
Vice President
Control Systems Activity
Computer Sciences Corp.

Robert Snyder
Chief, Separation Processes Branch
NASA/Marshall Space Flight Center

Jesco H. Von Puttkamer
Technical Engineer
Operations Management
NASA Headquarters

Participants in Low-Cost Alternatives to a Space Station, Apr. 4, 1983

Jacques Collet
Head of Long-Term Program
European Space Agency
Paris Office

Wilbur Eskite
Deputy Chief
Systems Planning and Development
National Environmental Satellite, Data, and Information Service
National Oceanic & Atmospheric Administration

Edmund J. Habib
Vice President for Engineering
Satellite Systems Engineering

Tadahico Inada
Washington Representative for NASA
National Space Development Agency of Japan
Scientific Section
Embassy of Japan

Akihiko Iwahashi
Representative
Science and Technology Agency
Government of Japan

Norbert Kiehne
DFVLR (Deutsche Forschungs- und Versuchsanstalt fur Luft- und Raumfahrt e. V.)

Kazuo Matsumoto
Representative
National Space Development Agency of Japan

Wilfred Mellors
Head (currently retired)
European Space Agency

Robert Noblitt
Senior Systems Analyst
Teledyne Brown Engineering

Alain Perard
Long-Term Study Manager
CNES Paris

Udo Pollvogt
President
ERNO-USA, Inc.

Hans Traumann
Attache
Scientific and Technological Affairs
Embassy, Federal Republic of Germany

H. J. Weigand
Consultant
MBB, Space Division

Participants in Low-Cost Alternatives to a Space Station Workshop, Apr. 27-28, 1983

Hubert Bortzmeyer
Consultant

Joseph Carroll
California Space Institute
University of California, San Diego

Jacques Collet
Head of Long-Term Program
European Space Agency
Paris Office

David Criswell
California Space Institute
University of California, San Diego

Troy A. Crites
The Aerospace Corp.

Hubert P. Davis
Vice President
Eagle Engineering, Inc.

Russell C. Drew
President
Science and Technology Consultants

Jean-Pierre Fouquet
Scientific Attache for Space Affairs
Embassy of France

George F. Fraser
Chief Engineer, Advanced Engineering
Shuttle Orbiter Division
Rockwell International

Allen Hill
MESA Program Manager
Space Systems Division
Boeing Aerospace Corp.

Tadahico Inada
Washington Representative for NASA
National Space Development Agency of Japan
Scientific Section
Embassy of Japan

William A. Johnston
Vice-President for Engineering
Fairchild Space Co.

Charles Mathews
Consultant

Rudy Meiner
European Space Agency
Paris Office

Wilfred Mellors
Head (currently retired)
European Space Agency
Washington Office

Robert Mory
European Space Agency
Paris Office

Udo Pollvogt
President
ERNO-USA, Inc.

Wilbur L. Pritchard
president
Satellite Systems Engineering

Anthony Sharpe
Manager of Space Station Program
Teledyne Brown Engineering

Thomas C. Taylor
President
Taylor & Associates, Inc.

Hans Traumann
Attache
Scientific and Technological Affairs
Embassy, Federal Republic of Germany

Participants in Unit Cost Workshop, Oct. 18-19, 1983

James Albus
Chief of Industrial Systems Division
National Bureau of Standards

William D. Bumgarner
Senior Member of the Executive Staff
Computer Sciences Corp.

Esker K. Davis
Pickering Research Corp.

Fred Esch
Executive Director
Spacecraft Technology
COMSAT Laboratory

James Graham
Senior Research Associate
John Deere & Co. Technical Center

Jack Barrington
Senior Vice President
Research and Development
COMSAT Laboratory

Walter Kapryan
Director and Senior Technical Advisor
Lockheed Corp.

Donald H. Novak
Project Manager
Computer Sciences Corp.

William Perkins
Director
Strategic Business Management
Rockwell International

Donald K. Slay-ton
President
Space Services Inc.

William C. Schneider
Vice President
Control Systems Activity
Computer Sciences Corp.

Albert A. Sorenson
TRW

William C. Stone
Research Structural Engineer
National Bureau of Standards

David Wensley
Chief Program Engineer
Space Stations
McDonnell Douglas Astronautics Co.

James E. Wilson
Consultant

Participants in Automation Workshop, Mar. 12, 1984

David Akin
Professor, Department of Aeronautics and Astronautics
Massachusetts Institute of Technology

James Albus
Chief
Industrial Systems Division
National Bureau of Standards

Michael Arbib
Graduate Research Center
University of Massachusetts

Ruzena Bajcsy
Professor
Department of Computer and Information Sciences
Moore School of Electrical Engineering
University of Pennsylvania

Michael Brady
Professor
Artificial Intelligence Laboratory
Massachusetts Institute of Technology

Rodney Brooks
Professor
Department of Computer Sciences
Stanford University

Margaret Eastwood
Vice President of Engineering
GCA Corp.

Charles Fraser
Chairman
Sea Pines Co.

William isler
Program Manager
Systems Science Division
Defense Advanced Research Projects Agency

Steven Jacobson
Professor
Department of Mechanical Engineering
University of Utah

Henry Lum
Acting Manager
Office of Computer Science and Electronics
NASA Headquarters

David Nitzan
Director
Robotics Department
SRI International

Marc Raibert
Professor
Department of Computer Science
Carnegie-Mellon University

Carl Ruoff
Jet Propulsion Laboratory

Roger Schapell
Manager, Advanced Automation Technology
Denver Aerospace
Martin Marietta Corp.

Thomas Sheridan
Professor
Department of Mechanical Engineering
Massachusetts Institute of Technology

Russell Taylor
Manager of Robot System Technology
T. j. Watson Research Center
IBM

James A. Van Allen
Chairman
Department of Physics
University of Iowa

Contents

Chapter *Page*

1. Executive Summary 3
2. Issues and Findings 25
3. Space Infrastructure 49
4. A Buyer's Guide to Space Infrastructure 85
5. Broadening the Debate 103
6. Toward a Goal-Oriented Civilian Program 113

Postscript: Report of the Second Advisory Panel Meeting 133

Appendix *Page*

A. Results of Principal NASA Studies on Space Station Uses and Functional Requirements 141
B. The Evolution of Civilian In-Space Infrastructure, I. E., "Space Station, " Concepts in the United States 159
C. International Involvement in a Civilian "Space Station" Program 177
D. Synopsis of the OTA Workshop on Cost Containment of Civilian Space Infrastructure (Civilian "Space Stations") Elements 206
E. Title II-National Commission on Space (Public Law 98-361) 214
F. Financing Considerations and Federal Budget Impacts. 217
G Glossary of Acronyms, Abbreviations and Terms. 227

Chapter 1

EXECUTIVE SUMMARY

Contents

Page

Introduction: Relation of a "Space Station" (i.e., Space Infrastructure) to the U.S. Future in Space 3

Rationale for Space infrastructure 4

Infrastructure Options. 7
- Technology Options 7
- Procurement Options 10
- Funding Rate Options.. 12

Need for Goals and Objectives 13

Some Possible Goals and Objectives 15

Infrastructure Required by the Proposed Goals and Objectives 17
- Technology 17
- cost. 18
- Financing 19

Shape of the Space Future 19
- International. 20
- Private Sector 20
- New Role for NASA 21

LIST OF TABLES

Table No. — Page

1. Comparison of Some Options for Low-Earth-Orbit independently Operating Infrastructure 8
2. Space Infrastructure Platforms That Could Be Serviced by Shuttle or an Orbital Maneuvering Vehicle 9
3. Some Illustrative Space Infrastructure Acquisitions Possible at Various Annual Average Federal Funding Rates 12
4. Possible Goals and Objectives 16
5. Cost and Schedule to Satisfy Objectives Suggested for Discussion 18

INTRODUCTION: RELATION OF A "SPACE STATION" (I. E., SPACE INFRASTRUCTURE) TO THE U.S. FUTURE IN SPACE

Atter the expenditure of some $200 billion (1984$) since the launch of its first spacecraft in early 1958, the United States has obtained the scientific knowledge and developed the technological capability and professional expertise to succeed i n virtually any theoretically possible civilian space venture that it may choose to undertake, But America's second quarter-century of space activities promises to differ markedly from the first, almost wholly exploratory, era. If space is to be successfully developed in roughly the same fashion as have other, more familiar natural resources and environments, the next stage will be characterized by establishing and secu r-ing the capabilities to support routine, operational activities there. I n this report, OTA refers to the range of in-space facilities and services that would support such activities as "infrastructure. "

Important steps in the considered development of space have already been taken. By any standard, the satellite communications industry is a great success; its revenues have reached the multibillion-dollar per year level and are growing at an annual rate of 15 percent. Massive launch facilities, expendable launch vehicles, and the space Shuttle *now* provide routine access to much of near-Earth space; used in conjunction with a global communications network and surface data processing facilities, they provide a sophisticated, though limited, range of services to their users.

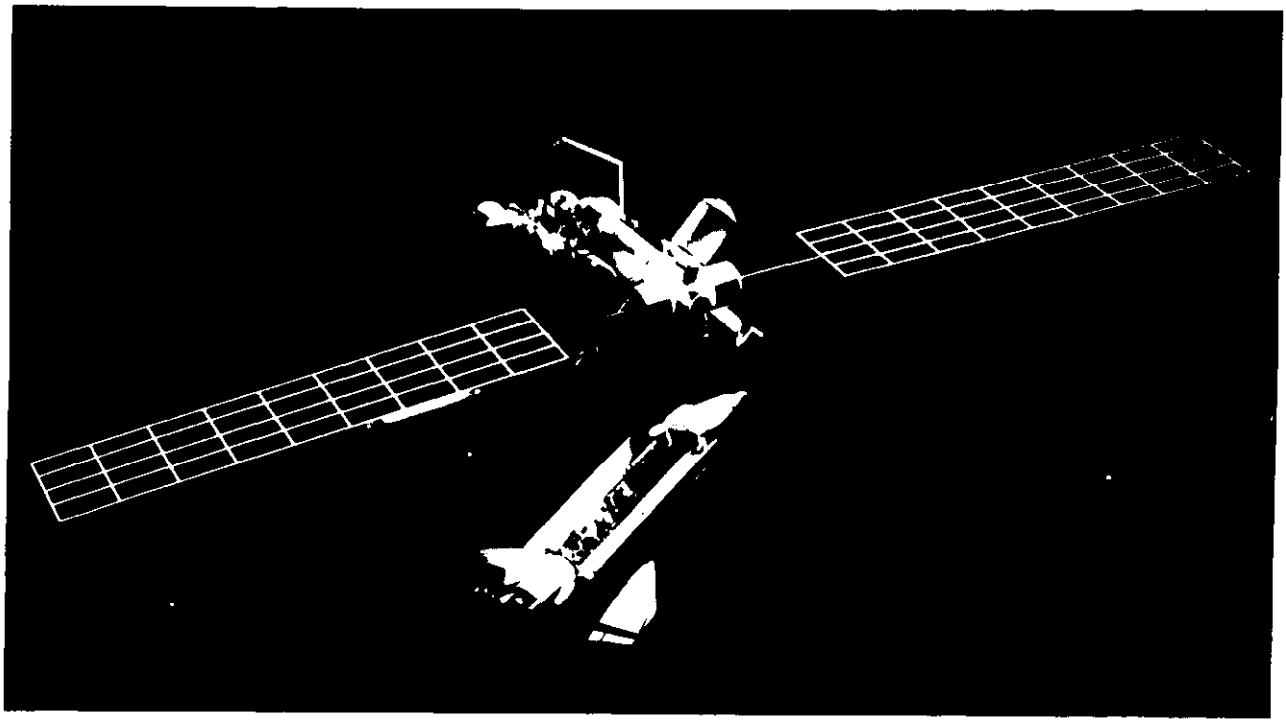

Photo credit: National Aeronautics and Space Administration

A large, inhabited "space station" in low-Earth-orbit is one approach to the establishment of a long-term infrastructure in space. The concept shown here (being visited by the space Shuttle) isaNASA designed and built model used for illustration throughout early 1984.

Another sign of strength is the maturity of the U.S. aerospace industry. This sector is now beginning to position itself to provide space assets and services independently, and now anticipates conducting some in-space investigations and commercial-industrial activities, privately financed, either on its own or in combination with other business concerns. And other countries now have capabilities to do many things in space—capabilities that continue to grow rapidly.

For years, leaders of the U.S. civilian space community have advanced the view that the next major logical step in space should be the acquisition of specific, permanent in-space infrastructure: a civilian "space station. "

In this context, Congress, in July of 1982, asked OTA to undertake an assessment of "Civilian Space Stations"; this report is the product of that request. The OTA assessment was requested originally by the Senate Committee on Commerce, Science, and Transportation, later (in October 1982) by the House Committee on Science and Technology. The assessment was endorsed in August 1982 by the House Committee on the Budget and the Senate Committee on Appropriations. The various committee interests were stated as follows:

- **Senate Committee on Commerce, Science, and Transportation:** assess the need for a permanent orbiting facility; examine the major technological alternatives and their related costs and benefits; focus on the different space station designs and orbits, the range of feasible applications for the project, the benefits and drawbacks of utilizing existing concepts, the estimated costs for potential missions and design options, and prospective private sector and international involvement.
- **House Committee on Science and Technology:** undertake an independent, rigorous, balanced study of the need for a space station; address "the hard questions"; not only look at what a station can do that cannot be done better some other way, but also evaluate alternatives to a space station. "In short, the assessment should address and document the real forces driving us to build a space station. "
- **House Committee on the Budget:** estimate the effect of a space station's cost on the NASA budget and the overall Federal budget; and consider the roles of the Department of Defense, the international community, and the private sector in the development, production, and operation of an inhabitable space station.
- **Senate Committee on Appropriations:** estimate the relative merits-of in-habitable and u nonhabitable space platforms; estimate the role automation/robotics can be expected to play in the construction and eventual use of space platforms; and estimate the costs associated with the range of design options.

This assessment has attempted to be responsive to the entire range of congressional interest, with the exception of the interest of the House Committee on the Budget in the role of the Department of Defense.

The report has examined the range of technology required of permanent space infrastructure as well as the broader policy questions arising from NASA's proposal of a particular constellation of infrastructure elements. **Overall, the considered development of space through the paced acquisition of appropriate elements of space infrastructure is a key to maintaining America's leadership in space. However, because the Nation does not have clearly formulated long-range goals and objectives for its civilian space activities, proceeding to realize the present NASA "space station" concept is not likely to result in the facility most appropriate for advancing U.S. interests into the second quarter-century of the Space Age.**

RATIONALE FOR SPACE INFRASTRUCTURE

Several countries are competent in the conduct of space investigations and the development and use of space technology. These countries are now providing growing economic competition for the United States through development, acquisition, and operation of their own elements of infrastruc-

ture. The Soviet Union has made a commitment to the permanent occupancy of space, has operated orbital stations with human work crews for over a decade, and is showing interest in providing competitive space services. Thus, if the United States is to continue as the leader in civilian space activities, Congress must give serious thought to the kind of space infrastructure to be developed, the long-term goals that that infrastructure is to serve, and the public-private and international arrangements that will take best advantage of it.

Future development of more sophisticated space science and applications capabilities—e.g., staging of planetary exploration missions or assembly of large communications platforms—would be markedly facilitated by the existence of appropriate elements of space infrastructure. It is assumed in this report that, whatever decisions are made regarding space infrastructure, publicly supported space science and space applications will continue at roughly their present level of appropriations (over $1 billion per year, as measured in constant dollars).

Although the United States already has acquired some initial elements of space infrastructure, these are insufficient to undertake a number of desirable activities in an efficient and effective manner. The acquisition of some additional permanent in-space infrastructure elements would:

- allow sophisticated experiments in life and materials sciences to be conducted;
- permit fuel to be stored and supplies to be warehoused in low-Earth-orbit;
- initiate more efficient staging of voyages to high orbits, the Moon, planets, and asteroids;
- allow the initial trial of new instruments, activities, and procedures; and
- allow the repair and maintenance of increasingly complex and specialized satellites and common carrier platforms.

The ability to undertake these activities, all of which would support space science and applications, constitutes a persuasive rationale for acquiring appropriate elements of permanent space infrastructure. At present, the more appropriate would be those which allowed the satisfactory conduct of: 1) life and materials sciences experiments, and 2) satellite servicing. However, by the same token, sufficient resources to ensure that these science and applications activities actually *are* undertaken must be assured; otherwise, the rationale for the infrastructure vanishes.

Box A.—What Is Space Infrastructure?

The terms "space station" or "space transportation node" are most accurately and usefully understood as identifying elements of long-term, perhaps permanent, in-space infrastructure, for the most part concentrated initially in low-Earth-orbits (LEO). These elements would provide in-space structure, electrical power, thermal control, warehousing, stability (*re* location, attitude, and temperature), communications, fuel, associated docking and air lock capabilities, local transportation, LEO-GEO (geosynchronous orbit) transportation, and, if staffed by men and women, life support, and residential and working space. Because it is expected to be sophisticated, and useful for periods of several decades, this space infrastructure (used in concert with other infrastructure elements already in hand such as the Kennedy launch complex, the global data relay communications system, the Shuttle, etc.) could provide a new and qualitatively different regime of space assets, allow the provision of new space services, and support the conduct of space activities in a new and presumably more efficient and effective manner. Space infrastructure provides methods and means that assist in addressing space end objectives.

A persuasive case can also be made for seeing that some of these permanent infrastructure elements allow an on-board human work force. This case rests on the fact that automated facilities, whether relatively autonomous or teleoperated, capable of supporting all of the activities listed above will not be available before 2000, even if a large automation R&D program is begun immediately. (This does not argue against such an R&D program. Indeed, there is good reason to expect that sophisticated automation will be necessary for the future development of space as well as for non-space-related Earth applications. It might well be appropriate, therefore, to initiate such a program now. Later, with the results of

this program in hand, informed judgments could be made about the most sophisticated mix of human and machine workers.)

As the Shuttle development program comes to a close, thousands of in-house engineers and technical support staff and, in principle, as much as $2 billion (1984$) per year in contract funds under its present $7 billion (1984$) "budget envelope" will be freed up to be applied to one or more new programs. If NASA is to maintain its current size—a size that NASA leaders judge to be acceptable to the general public–the combination of people and funds that could soon become available suggests, strongly, that any new programs must include development and acquisition of a great deal of new technology, preferably related to having people in space; large numbers of technologists would be gainfully employed both in NASA and in the space industry under contract to NASA.

In addition, many believe that NASA might not long survive in its present form without a single, large, "people-in-space" program upon which a majority of its energies are focused. If a number of smaller programs were initiated instead, each of them, it is thought, could be terminated

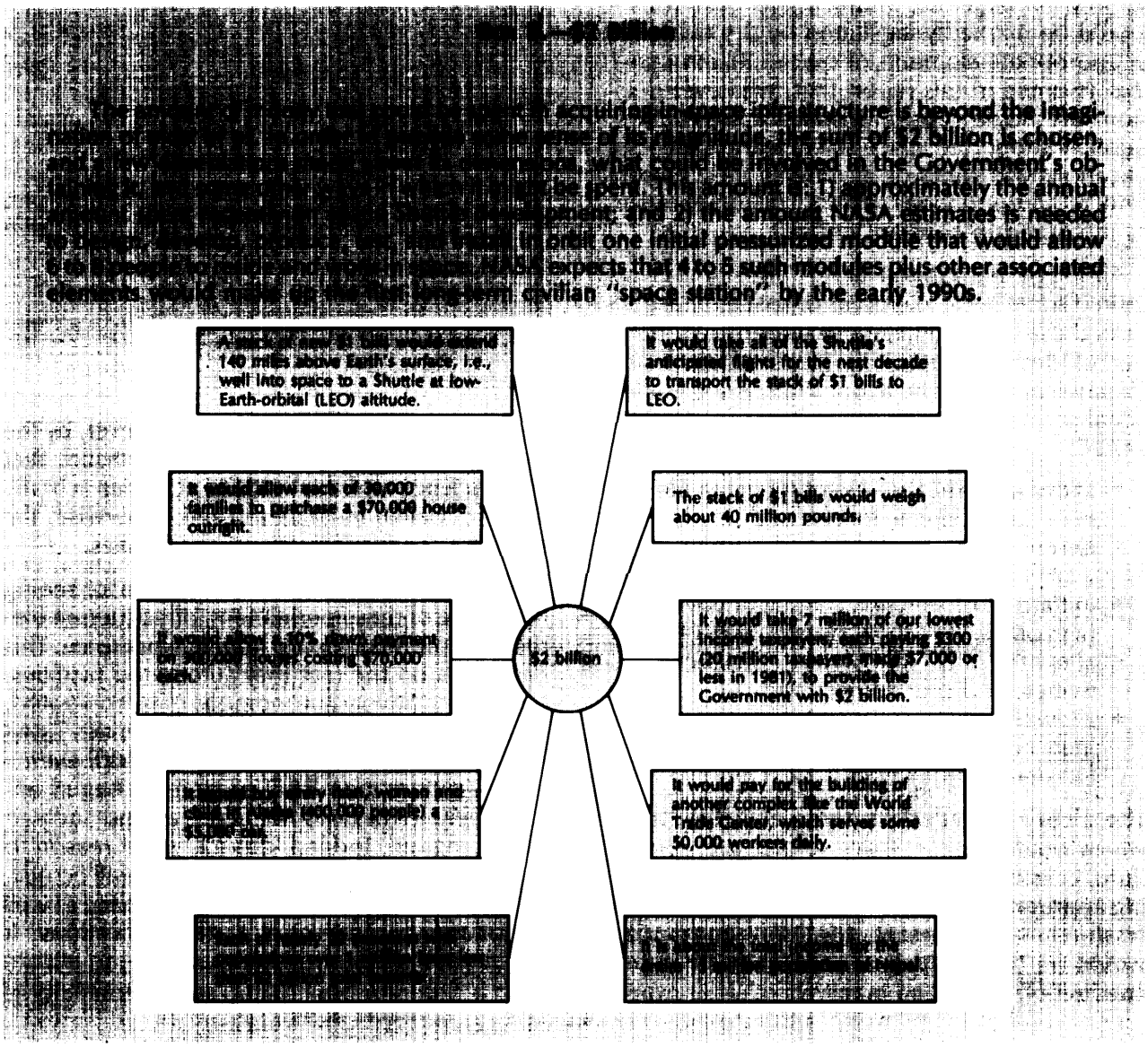

without widespread objections arising i n the political process.

Finally, NASA may have thought it prudent to propose a ''space station' program rather than some other large endeavor(s) (e. g., a return of Americans to the Moon, or sending people on an expedition to Mars, etc.), both because the former had been carefully studied over the years, representing, i n NASA's view, a natural complement to the Shuttle, and because alternative large programs seemed too grandiose, have not recently been discussed with the general public, and, therefore, were less likely to enlist the required support, both with in and without the administ ration.

All of these considerations, taken together, are clear incentives for the space technology leaders, both Government and industry, to opt for a combination of a Shuttle-like "methods and means' activity, rather than to accept the posi - t ion of a much smaller Federal agency or to fight for approval of one or more large, new space "end" programs.

But while **the case to be made** for acquiring ***some* long-term, inhabitable infrastructure in low-Earth-orbit is persuasive, OTA concludes that there is no compelling, objective, external case either for obtaining all of *the particular array*** of **elements that NASA now describes under the rubric of "The Space Station, " or for obtaining this or any other array *in the general manner* that** NASA is now expected to pursue, **or for paying *the particular public cost* that** NASA **now estimates is required. As the infrastructure would be of a broadly general-purpose nature, to be used to support over 100 conceptual uses (few of which have** been sharply defined or have gained wide acceptance as important objectives of the space program), there is no necessity for obtaining all of this particular array soon.

INFRASTRUCTURE OPTIONS

The fact that the United States has already developed a wide variety of space capabi lities means that it has genuine choices–both of what infrastructure elements it places in orbit and of how these elements are to be acquired and used. It is around these choices that the difficult issues lie; by andi large, the technology is either in hand or can be readily developed.

Technology Options

It **must be emphasized that the particular constellation of space infrastructure elements that** NASA **currently aspires to develop, construct, deploy, and operate is only one alternative in a wide range of options. Simply put, there is no such thing as "the space station. " What is under discussion is a *variety of sets of infrastructure elements,* ranging from modest extensions of current capabilities to more sophisticated, capable, and costly ensembles than NASA is** now **suggesting.**

As one way of presenting the variety of technology options available, OTA has prepared tables 1 and 2.[1]

There is one fundamental infrastructure option that requires particular mention: should the elements be wholly automated or shou ld they house '] human crew? Conceptually, useful space infrastructure could be designed either to include a human work crew or to depend on sophisticated machines unattended in space or operated via communication links with the surface. Despite the fact that the relative efficiency and/or effectiveness of these two quite different approaches have been extensively debated for years, no general consensus has emerged. However, if sophisticated new space activities are to be supported by in-space infrastructure as soon as the early 1990s, there will have to be a human presence.

[1]Ch. 3 of this report discusses infrastructure options in detail.

Table I.—Comparison of Some Options' for Low-Earth-Orbit Independently Operating Infrastructure

	Shuttle Orbiter	Extended Duration Orbiter: Phase I	Extended Duration Orbiter: Phase II	Free-flying spacelab (developed as permanent infrastructure)	NASA infrastructure aspirations	
					Initial operational capability	Mature, fully developed
Date available (assuming start in 1985)	Now	1988	1990	1990	1992	1996-2000
COST[b] (billions of fiscal year 1984 dollars)	None	0.2	0.5	2-3	8	20
Characteristics						
Power to users (kW)	7	7	20	6	80	200
Pressurized volume (m^3)	60	60	100 (with Spacelab habitat)	100	200	300
Nominal crew size	6	5	5	3	8	20
Miscellaneous	Can accept Spacelab	No new technology	New technology required; modest laboratory space	Modest crew accommodations	Orbital maneuvering vehicle plus two free-flying unpressurized platforms	Reusable orbital transfer vehicle plus several more platforms
Capabilities[c]						
Time on Orbit	10 days	20 days	50 days	Unlimited (60-90 day resupply)	Unlimited (90 day resupply)	Unlimited (90 day resupply)
Laboratories for:						
Life sciences	Moderate	Moderate	Considerable	Extensive	Extensive	Extensive
Space science/applications	Modest	Modest	Modest	Modest	Extensive	Extensive
Materials science	Some	Some	Moderate	Moderate	Extensive	Extensive
Technology development	Modest	Modest	Some	Moderate	Extensive	Extensive
Observatories	No	Modest	Modest	Modest	Extensive	Extensive
Data/communication node	No	No	No	No	Considerable	Extensive
Servicing of satellites	Modest	Modest	Modest	Modest	Considerable	Extensive
Manufacturing facility (materials processing)	No	No	Modest	Modest	Considerable	Extensive
Large structure assembly	No	No	No	Modest	Moderate	Extensive
Transportation node	No	No	No	No	Moderate	Extensive[d]
Fuel and supply depot	No	No	No	No	No	Considerable
Response to reasons advanced for space infrastructure						
Maintain U.S. space leadership and technology capability	No	Modest	Modest	Modest	Considerable	Extensive
Respond to U.S.S.R. space activities	No	Modest	Modest	Modest	Considerable	Extensive
Enable long-term human presence in space	No	Modest	Modest	Considerable	Extensive	Extensive
Attention-getting heroic public spectacle	No	Modest	Modest	Modest	Modest	Modest
Extended international cooperation	Modest	Modest	Moderate	Moderate	Moderate	Moderate
Promote U.S. commercialization of space	Modest	Modest	Modest	Considerable	Considerable	Considerable
Maintain vigorous NASA engineering capability	No	No	No	Modest	Extensive	Extensive
Enhance national security, broadly defined	No	No	No	Modest	Unclear	Unclear
Space travel for non-technicians	Modest	Modest	Modest	Modest	Considerable	Considerable

[a] Listed options are illustrative examples; the list is not exhaustive.
[b] Costs include design, development, and production; launch and operational costs are not included. Some costs are estimated by the Office Of Technology Assessment; others were provided to OTA.
[c] Clearly judgmental.
[d] Including launch to the Moon, Mars, and some asta:otis.

Table 2.—Space Infrastructure Platforms[a] That Could Be Serviced by Shuttle or an Orbital Maneuvering Vehicle

	Unpressurized coorbiting platforms (serviced by means of extravehicular activity)				Pressurized platforms (serviced internally while docked)	
	SPAS	MESA	LEAS ECRAFT	EURECA	Space Industries' Platform	European Modified Spacelab
Date available (now, or approximate, assuming start in 1985)	Now	Now	1986	1987	Late 1980's	1989
Cost[b] (billions of fiscal year 1984 dollars)	0.005	0.01	0.2	0.2	0.3	0.6
Characteristics						
Power to users (kW)	0.6	0.1	6	2	20	6
Pressurized volume (f?)	None	None	None	None	2,500	3,000
Nominal crew size	None	None	None	None	1-3 only when docked	3
Miscellaneous	3,000 lb Payload	200 lb Payload	20,000 lb Payload	2,000 lb Payload	25,000 lb Payload	20,000 lb Payload
Capabilities[c]						
Time on orbit	10 days	8 months	Unlimited	6 months	3-6 months	Unlimited
Laboratories for:						
Life sciences	No	No	Modest	Modest	Modest	Moderate
Space science/applications	Modest	Modest	Modest	Modest	No	Moderate
Materials science	Modest	No	Modest	Modest	Moderate	Moderate
Technology development	No	No	Modest	Modest	Moderate	Modest
Observatories	No	No	Modest	Modest	Modest	Moderate
Data/communication node	No	No	No	No	No	No
Servicing of satellites	No	No	No	No	No	No
Manufacturing facility (materials processing)	No	No	Considerable	Modest	Extensive	Considerable
Large structure assembly	No	No	No	No	No	No
Transportation node (assembly, checkout, and launch)	No	No	No	No	No	No
Fuel and supply depot	No	No	No	No	No	No
Response to reasons advanced for space infrastructure						
Maintain U.S. space leadership and technology capability	No	No	Modest	No	Modest	No
Respond to U.S.S.R. space activities	No	No	Modest	No	Modest	Modest
Enable long-term human presence in space	No	No	No	No	No	No
Attention-getting heroic public spectacle	No	No	No	No	No	No
Extended international cooperation	Yes	No	No	Yes	No	Unclear
Promote U.S. commercialization of space	Unclear	Modest	Considerable	No	Considerable	No
Maintain vigorous NASA engineering capability	No	No	No	No	No	No
Enhance national security, broadly defined	No	No	No	No	No	No
Space travel for non-technicians	No	No	No	No	No	No

[a] Listed platforms are illustrative examples; the list is not exhaustive.
[b] Costs include design, development, and production; launch and operational costs are not included. Some costs are estimated by the Office of Technology Assessment; others were provided to OTA.
[c] Clearly judgmental.

Procurement Options

Inasmuch as there is an affirmative answer to the question of whether to acquire some long-term, in-space infrastructure, the decision of how it is to be acquired must be faced. In many respects, this second decision is just as important as the first. The mode of acquiring new, long-term, in-space assets and services should be influenced by a clear understanding of the context in which space activities are expected to be carried on. And the decision as to how to acquire these assets and services will have a significant impact on future space activities.

There are four main factors that could heavily influence procurement choices:

- Several foreign countries are now capable of producing and operating substantial elements of space infrastructure.
- Using its own resources, the U.S. private sector is now capable of producing much of the infrastructure currently envisioned and offering it for sale or lease to the Government or the private sector.
- NASA would prefer to acquire the infrastructure under its own aegis and in the same general way that it has acquired other large space systems (except for Spacelab).
- Other large and sophisticated civilian space programs-can be easily imagined that would require professional skills and funds of the kind and magnitude now envisioned for a "space station. "

Congress and the President have approved NASA's request to initiate a "space station" program, and NASA appears to be moving to acquire such infrastructure in much the same fashion that it acquired the Shuttle:

- A great deal of new technology would be developed, acquired, and used, essentially all of which would be publicly funded.
- NASA would arrive at and issue detailed engineering specifications for, and exercise close management control over, the technology to be acquired.
- This infrastructure would be procured by NASA with Federal funds. The U.S. private sector would not be prompted to use its own resources to provide a substantial portion of the infrastructure.
- The international role would be limited. NASA would not seek the kind of close collaboration that would result in shared authority, even if doing so might result in substantial capital cost reduction for the United States.

A significantly different acquisition approach–**another option—would** have the following elements:

- As much as is reasonably possible, already developed, tested, and paid-for technology would be used to achieve an adequate initial operating capability, with development of new technology undertaken only where demonstrably required to lower overall cost of ownership.
- NASA would prompt our private commercial-industrial-financial sectors to develop and produce, with their own resources and on a genuinely competitive basis, as many of the Government-required civilian "space stat ion' assets and services as they can; NASA would facilitate their efforts to do so; and they could be offered to NASA on a sale, lease or payment-for-service basis.
- NASA, in obtaining the elements not provided by the private sector, would emphasize management methods specifically designed to take the best advantage of the now quite sophisticated U.S. space industry.
- NASA would negotiate collaborative agreements with other cooperating countries that would see all partners share in the benefits of such an initial operating capability at a reduced acquisition cost to the U.S. Government for its share.

This second approach would imply that NASA would hand off much (perhaps most) of the more mundane "space station" work by paying the private sector to do it, thereby conserving its skills and resources so that they could be focused on more challenging space goals and objectives, including development of the very advanced technology (e. g., bipropellant engines, a reusable orbital transfer vehicle, etc.) required to address them—an activity which, for the most part, the private sector cannot justify.

These two options are at opposite ends of a spectrum of approaches to the acquisition of long-term space infrastructure. In determining which approaches from this spectrum are most likely to influence the evolution of space activities in a desirable direction, Congress may wish to consider the following questions:

- Should the Government be allocating its professional skills and experience to the development of (a) incremental or (b) fundamental advances in technology?
- Which approach is most likely to stimulate the "commercialization of space?"
- What level of international collaboration is really desirable?
- What other large and important space ends should be addressed in the next decade in addition to the acquisition of in-space infrastructure methods and means?

Congress may also wish to keep in mind that the choice of approach to infrastructure acquisition will also affect its eventual cost to the taxpayer. Beyond the observation that, in some general fashion, the cost will increase with the capability and sophistication of the infrastructure, accurate cost estimates are very difficult to make.[2] However, the following are important cost factors:

1. the total capability acquired–which, as suggested by the examples listed in the tables of infrastructure options, can encompass a considerable range;
2. the extent to which already developed, tested, and paid-for technology is used, v. a focus on new technology with its higher development cost and greater risk of cost overruns;
3. the substitution, where feasible, of automated systems for the accomplishment of tasks previously undertaken only by human beings;
4. the manner by which the infrastructure is acquired–i.e., the extent to which NASA puts the engineering challenge on the space industry by issuing performance specifications, rather than continuing to issue detailed engineering specifications and managing the acquisition process in detail;
5. the effectiveness of NASA's efforts to persuade our private sector to develop infrastructure assets and services "on their own, " and to provide them to the Government at purchase, lease, or payment-for-service prices lower than those achievable by the Government;
6. the effectiveness of NASA's efforts to effect eventual private sector operation of the infrastructure and its related activities;
7. the extent to which large and rapid expansion of military space research, development, test, and evaluation (RDT&E) activities increases costs in the civilian space sector also;[3]
8. the extent to which any "Christmas-tree effect" takes place within NASA, whereby the infrastructure acquisition management is persuaded by the NASA Centers to allow the cost of desirable but nonessential RDT&E activities to be included in the acquisition program; and
9. the effectiveness of NASA's efforts to arrive at large-scale collaboration and related cost-sharing arrangements with other countries.

These points address only the initial capital cost of this infrastructure—to this cost must be added its ongoing operation and maintenance costs; the cost of instruments and equipment needed for scientific experimentation in association with its use; and the interest cost of any money borrowed to fund the acquisition program. And it must be remembered, too, that the infrastructure will eventually become obsolete or wear out.

It is clear that there are many opportunities to reduce infrastructure net cost that could be grasped by a vigorous, imaginative, and determined NASA management.[4]

These considerations suggest that, over the next year or two, at least as much attention should be given to identifying the best ways by which the country should set about the permanent development of space as there is given to any technologi-

[2]See ch. 4 of this report for a discussion of cost estimation considerations.

[3]Classified material was not used in preparing this report.

[4]Cost reduction measures are discussed in app. D of this report

cal advances and operational capabilities that are to be obtained.

Funding Rate Options

Another way of thinking about space infrastructure is to estimate how much of it could be obtained if different annual funding rates were established. Thus, to provide an independent basis of comparison with the civilian "space station" program now apparently favored by NASA, OTA has estimated what new space capabilities could be provided, by when, for various annual average Government funding rates. No changes to present **NASA acquisition procedures or NASA anticipated acquisition costs are assumed. Arbitrary annual average funding levels of $0.1, $0.3, $1,** and $3 billion per year (1984$) were chosen to illustrate the number and kind of space infrastructure elements that could be acquired over periods of 5, 10, or 15 years.

The results of these 12 funding scenarios are given in table 3, which shows the funding rate, number of years, total expenditure, and kinds of infrastructure elements acquired. s The elements are divided into those that can operate independently (e.g., the Shuttle Orbiter and a "space station" central base) and those that depend on being serviced or maintained from one of the independent elements (i.e., by an orbital maneuvering vehicle, a local in-space transportation system operated from a "space station" central element, or directly by the Shuttle).

Table 3 lists the following (among other) elements of space infrastructure that could be acquired over various acquisition intervals:

1. At $0.1 billion per year: probably no "permanently manned" facility could be ob-

[5]Additional discussion of funding rate options can be found in ch. 4 of this report.

Table 3.—Some Illustrative Space infrastructure Acquisitions Possibie at Various Annuai Average Federai Funding Rates (all amounts in billions of *1984* dollars)

			Space acquisition~				
				Dependent elements			
Funding rate ($&r)	Number of years	Total expenditures ($)	Independent infrastructure element+	Unpressurized platforms	Pressurized platform#	Space-based transport vehicles	Beyond geostationary orbit spacecraft elements
0.1[e]	5	0.5	EDO I[f] (20 days, 5 crew)	2	—	—	—
	10	1	EDO II (50 days, 6 crew)	3	—	—	—
	15	1.5	EDO II (50 days, 6 crew)	3	1	—	—
0.3	5	1.5	EDO II (50 days, 6 crew)	3	1	—	—
	10	3	Free-flying Spaceiab modules' (permanent, 3 crew)	1	1	OMV	—
	15	4.5	2 free-flying Spacelab modules in both 28 degree and polar orbits (3 crew each)	2	1	OMV	—
	5	5	Space transportation center (4 crew)	–	—	OMV; ROTV	—
	10	10	NASA initial operating capability "space station"g (8 crew)	2	1	OMV; ROTV	—
	15	15	NASA growth "space station"g (12 crew)	3	1	OMV;ROTV	—
	5	15	NASA growth "space station"g (12 crew)	3	1	OMV; ROTV	—
	10	30	NASA mature "space statlon"g (16 crew) Shuttle-Derived Cargo Vehicle (SDV)	3	2	OMV;ROTV	Lunar capable ROTV; staffed Lunar facility
	15	45	NASA mature "space station"g (18 crew, SDV)	5	3	OMV; ROTV	Lunar capable ROTV; staffed Lunar facility; Mars voyage

[a]Tables 1 and 2 present characteristics and capabilities of Infrastructure elements in detail.
[b]Extended Duration Orbiters (EDO) are limited in their stays on orbit; other Independent elements are long-term.
[c]Platforms of the LEASECRAFT/EURECA type.
[d]Platforms of the modified free-flying Spacelab/Space Industriestype with their own electrical power and pressurization systems.
[e]At $0.1 billion/yr, no long-term, staffed Infrastructure elements are possible.
[f]EDO I (Extended Duration Orbiter, Phase I) and the Spacelab modules have limited electrical power (about 7 kW).
[g]The NASA "space station" elements are expected to operate as transportation and servicing centers as well as laboratories. They would have sufficient power for extensive materials processing.
[h]A significant part of the cost of a human visit to Mara could be provided in this case.

tained even by the year 2000. Further extension of capabilities of the Shuttle system and unpressurized platform developments could be obtained. The acquisitions could be: a development of the Extended Duration Orbiter (EDO) Phase 1, for 20-day orbit stays, over a 5-year period; or EDO Phase II, for 50-day orbit stays, over 10 years or longer, plus two or three free-flying unpressurized platforms such as EURECA, LEASECRAFT, and/or the Space Industries' platform (assuming that the Government would make an outright purchase of such platforms).

2 At $0.3 billion per year: within 5 years, the acquisitions could be an EDO II plus several (perhaps pressurized) platforms. Over 10 years, there could be acquired: 1) the first permanently orbiting, Spacelab-derived habitable modules in 28.5° LEO that could support three people; 2) an orbital maneuvering vehicle (OMV) (enabling servicing of nearby satellites); and 3) a few free-flying platforms. in 15 years, there could be obtained either: 1) two free-flying Spacelabs, one in polar orbit, one at 28.5° LEO; or 2) much more capable permanent infrastructure at 28.5° than that which could be acquired in 10 years.

3 For $1 billion per year: within 5 years, there could be acquired: 1) a permanent LEO facility operating as a transportation node; 2) an OMV; and 3) a reusable orbit transfer vehicle capable of transporting spacecraft to and from higher, including geostationary, orbit. In 10 years the initial operating capability (IOC) infrastructure now favored by NASA could be acquired. In 15 years, nearly all of the infrastructure now seriously considered by NASA could be acquired.

4. At $3 billion per year (assuming that only funds, not technology or other factors, would be the pacing program factor): NASA's fully developed "space station" could become available in somewhat more than 5 years. In 10 years, this infrastructure plus a geostationary platform, plus a Shuttle-derived cargo vehicle for lower cost fuel and cargo transfer to LEO, plus a lunar facility ready for occupancy and continuing operation would become possible. In 15 years, NASA's complete infrastructure aspirations and a lunar settlement could be in hand and, perhaps also, plans for seeing a human crew travel to the vicinity of Mars and back could be well advanced.

These projections are for infrastructure acquisition only; operational costs are not included. Also, there is a basic difference between the costs associated with Shuttle-type vehicles and permanently orbiting facilities. The use of an EDO to conduct extended science or development activities with a crew would involve launch costs each time it went into orbit; use of a permanent facility would require resupply several times per year, but the cost for each flight could be shared with other payloads. For example, if 12 dedicated 30-day EDO flights were conducted per year, about $1 billion (1984$) in annual transportation costs would be involved; in comparison, the cost of 4 partial-load Shuttle launches per year to resupply a permanent facility would total $100 million to $400 million (1 984$).

NEED FOR GOALS AND OBJECTIVES

In view of the variety of possible ensembles of infrastructure, the different methods of acquiring them, and the range of funding rates at which they could be acquired, how are the choices to be made? **In general, these choices should not be made without prior agreement on the future direction of the civilian space activities of the United States; however, the infrastructure elements for which identifiable, serious users have "hard" requirements might well be acquired within the next decade.** In the meantime, the most effective way to determine our direction in space would be a national discussion of, and eventual agreement on, a set of long-range goals which the United States expects its civilian space activities to address.

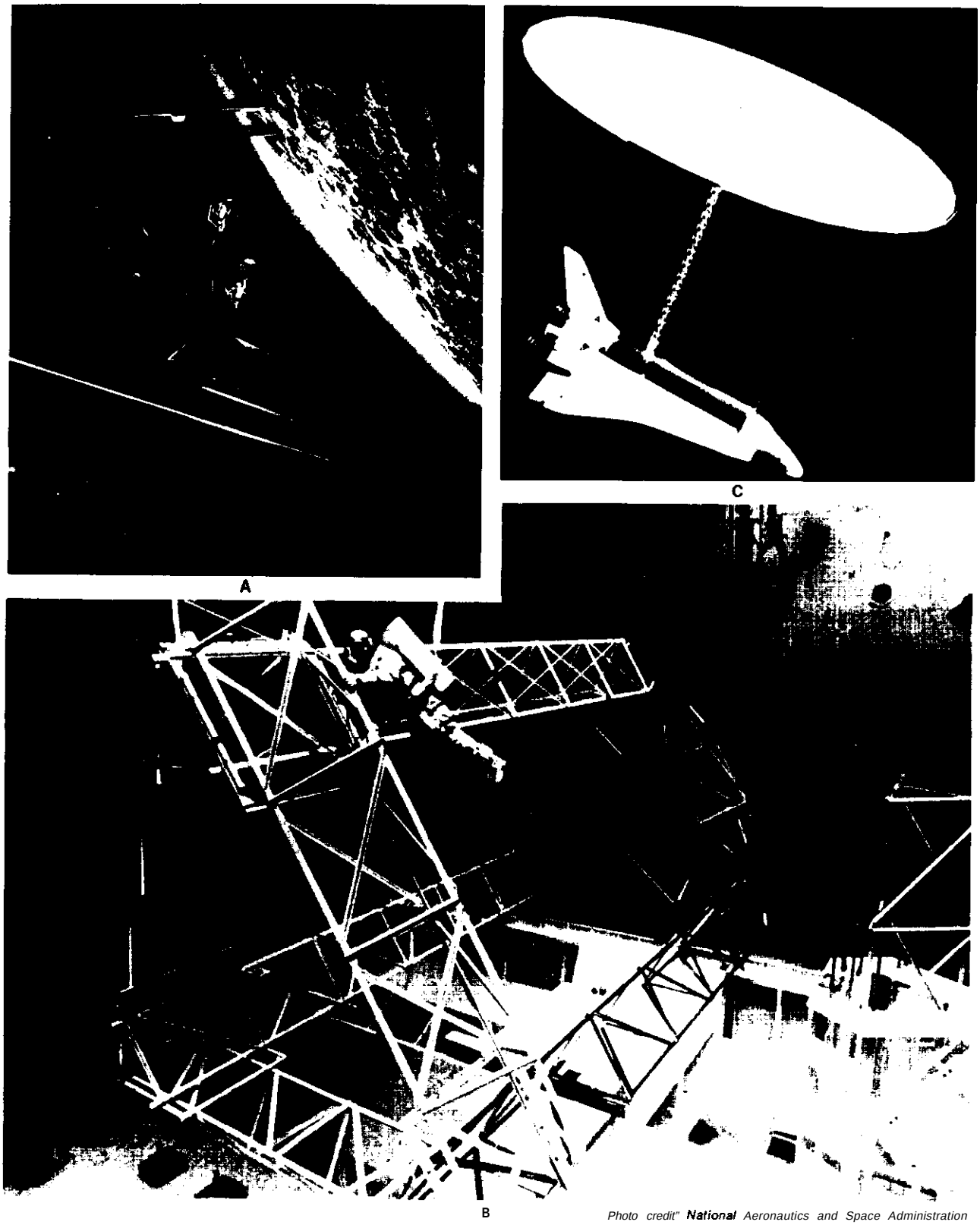

Photo credit" National Aeronautics and Space Administration

One alternative to the development of new technology is to use the space Shuttle for many advanced operations in low-Earth-orbit. Shown here: (A) servicing satellite in April 1984; (B) assembly of a large structure in orbit—here simulated in water; and (C) a deployable antenna.

Today, unfortunately, there is general agreement neither on such a set of long-range goals nor on a set of specific objectives which, as they are addressed, would serve as milestones of progress toward those goals. If future civilian space-related goals and objectives are to be effective in providing direction to U.S. space efforts, they should be such as to command widespread attention; have inherent humanitarian and scientific interest; foster development of new technology; have relevance to global issues; prompt international cooperation; and involve major participation of our private sector.

Such a set of goals and objectives would allow a clear determination of the basic characteristics of the infrastructure elements actually needed, and of the means and rate whereby these elements should be acquired. **In the absence of such goals and objectives, and with the great uncertainties in the estimate of any infrastructure cost to the public, OTA concludes that it is impossible to judge,** objectively, whether **or not most of the infrastructure elements proposed to date—and, in particular, many of the set currently proposed by NASA—are truly appropriate and worth their substantial cost.**

SOME POSSIBLE GOALS AND OBJECTIVES

In order to prompt the formulation and subsequent discussion of future space goals and objectives, OTA has prepared a list of possible long-range goals and a set of nearer-term objectives designed to address those goals. Although OTA does *not* recommend either this particular set of goals or its supporting family of objectives, they are intended to exemplify the *kind* of goals and objectives around which consensus might well be formed so as to provide sensible guidance for the Nation's future space activities. The Advisory Panel of this assessment has taken an unusually active role in helping to formulate these goals and objectives. It is the panel's judgment that the goals and objectives proposed for discussion are reasonable and important.

The national goals proposed for discussion are as follows:

- to increase the efficiency of space activities and reduce their net cost to the general public;
- to involve the public directly in space activities, both on Earth and in space;
- to derive scientific, economic, social, and political benefits;
- to increase international cooperation and collaboration in and regarding space;
- to study and explore the Earth, the solar system, and the greater physical universe; and
- to spread life, in a responsible fashion, throughout the solar system.

OTA has also formulated, as milestones to mark progress toward these goals, the following family of 10 objectives. Table 4 relates these objectives to the six goals. Some of the objectives are readily achievable; others may not be, but still represent legitimate targets.[6] They are not rank-ordered.

1. A space-related, global system/service could be established to provide timely and useful information regarding potentially hazardous natural circumstances found in the Earth's space and atmosphere, and at and below its surface.
2. A transportation service could be established to and from the Earth's Moon, and a modest human presence established there, for scientific and other cultural and economic purposes.
3. Space probes could be used to obtain the information and experience specifically required to plan for further exploration of the planet Mars and some asteroids.
4. Medical studies of direct interest to the general public, including study of the human aging process, could be conducted through scientific experiments that compare physiological, emotional, and social experience in the absence of gravity with experience gained in the conduct of related surface studies.

[6] A full discussion of the objectives appears in ch. 6 of this report.

Table 4.—Possible Goals and Objectives

	Goals						
	Increase space activities' efficiency; reduce their net cost	Involve the general public directly	Derive economic benefits	Derive scientific, political, and social benefits	Increase inter-national cooperation	Study and explore the physical universe	Bring life to the physical universe
Objectives:							
1. Establish a global information system/ service re natural hazards	N	N	P	Y	Y	N	N
2. Establish lower cost reusable transportation service to the Moon and establish human presence there	Y	P	P	Y	Y	Y	Y
3. Use space probes to obtain information re Mars and some asteroids prior to early human exploration	N	N	N	Y	Y	Y	N
4. Conduct medical research of direct interest to the general public	N	N	P	Y	P	N	N
5. Bring at least hundreds of the general public per year into space for short visits	N	Y	Y	Y	Y	N	Y
6. Establish a global, direct, audio broad-casting, common-user system/sewice	N	P	P	Y	Y	N	N
7. Make essentially all data generated by civilian satellites and spacecraft directly available to the general public	N	Y	P	Y	Y	N	N
8. Exploit radio/optical free space electromagnetic propagation for long-distance energy distribution	N	N	Y	P	Y	N	N
9. Reduce the unit cost of space transpor-tation and space activities	Y	N	Y	Y	N	N	N
10. Increase space-related private sector sale&	Y	N	Y	N	N	N	N

[a]This would advance the prospects of successfully addressing all other "goals."

Y: Yes; N: No; P: Perhaps; depends on how carried out.

5. At least hundreds of members of the general public per year, from the United States and abroad, could be selected on an equitable basis and brought into space for short visits there.
6. A direct audio broadcasting, common-user system/service could be established that would be available to all of the countries of the world on an economical and equitable basis.
7. In general, all of the nonclassified and nonprivate communications from, and nonproprietary data generated by, all Government-supported spacecraft and satellites could be made widely available to the general public and our educational institutions in near-real-time and at modest cost.
8. Radio and optical free-space electromagnetic propagation techniques could be exploited in an attempt to allow reliable and economic long-distance transmission of large amounts of electrical energy, both into space for use there, and from space, lunar, and remote Earth locations for distribution throughout the world.
9. The unit cost of space transportation, for people and equipment, between the Earth's surface and low-, geosynchronous-, and lunar-Earth orbit could be sharply reduced.
10. Space-related commercial-industrial sales in our private sector could be stimulated to increase at a rate comparable to that of other high-technology sectors, and our public expenditures on civilian space assets and activities could reflect this revenue growth.

Congress and the President have now agreed on legislation that will establish a National Commission on Space. This commission will be well-positioned to initiate and sponsor a national debate on the future direction of U.S. space activities. The goals and objectives suggested here may provide a substantial starting point for further discussion.

INFRASTRUCTURE REQUIRED BY THE PROPOSED GOALS AND OBJECTIVES

Technology

Some of these objectives, if they are to be achieved, will require certain elements of in-space infrastructure; others, depending on how they would be carried out, may or may not require such elements; still others will require none. The manner in which the United States obtains any of this infrastructure should reflect, as much as possible, our already great investment in space technology and operations; whenever reasonably possible, it should be obtained at the lowest capital, and operations and maintenance, cost to the public purse.

If the Government's large capital costs for development and production are to be minimized and the private sector strengthened, then serious consideration might well be given to encouraging the private sector to provide infrastructure elements that meet Government performance specifications, rather than detailed engineering specifications. These elements could be provided to others as well as to the Government through sale, long-term leases, or on the basis of charges for actual service use.

The main elements of longer term space infrastructure called for in pursuing the family of 10 objectives are:[7]

a. an LEO capability to assemble and check out the large and sophisticated satellites and space structures needed to provide both the hazard-prevention and the direct audio broadcast global system/service [objectives (1) and (6)];
b. an LEO human residential and working space to be used for medical research [objective (4)], and possibly for space visits [objective (5)];
c. a transport staging facility to support efficient travel to geostationary orbit, the Moon, and beyond, using reusable orbital transfer vehicles or other vehicles. [this would address objectives (1), (2), (3), (6), (9), and possibly (8)]; and
d. a storage facility in LEO would allow use of full Shuttle loads, helping objective (9), and staffed LEO laboratory facilities could promote (1 O).

Of course, if such infrastructure elements were available for the specific purposes that justify their acquisition, they could be used for additional purposes also.

Note that, in essence, provision of the infrastructure needed to pursue two of the larger-scale objectives [(2) and (4)] could accommodate most of the needs of all of the other eight. In what follows, therefore, the cost of this infrastructure is included under these two objectives.

And note that no Government development of free-flying platform infrastructure elements is called for; these elements (e.g., MESA, SPAS, EURECA, LEASECRAFT, the Space Industries platform, etc.) could and probably would be designed, developed, and installed by our private

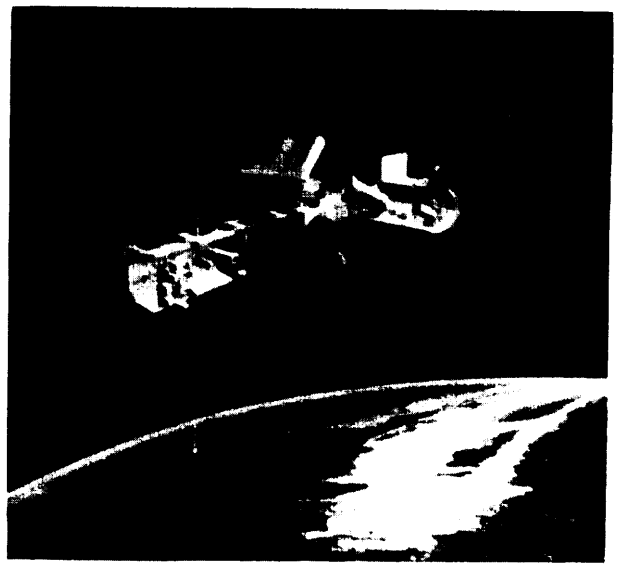

Photo credit: National Aeronautics and Space Administration

Free-flying platforms such as the one depicted in this artist's concept offer one option for relatively low-cost space infrastructure elements.

[7] No additional space infrastructure elements are needed to achieve objective (7).

sector, and/or other countries, and offered to the civilian space community—both Government and private interests—under appropriate sale or lease arrangements, where they could be used for remote sensing, the conduct of scientific research, or the production of various materials under microgravity conditions.

Finally, note that very large amounts of very costly electrical power in LEO (with an initial capital cost of as much as $10,000 per watt) are not called for; some 20 kilowatts would appear to be sufficient. Larger amounts appear to be needed only for any eventual commercial-industrial materials processing, and could then be provided and financed by the private sector in anticipation that such processing will prove to be profitable.

cost

Attaining all of the proposed objectives would, overall, cost a great deal of money. In the accompanying table s, rough estimates are made for the cost of each of them, and the length of time over which each would be pursued to completion. It is a fundamental assumption that maximum use will be made of: 1) already developed and paid-for technology, 2) the most truly competitive procurement methods, and 3) the most modern and least burdensome acquisition strategies and procedures.

A first rough estimate of the total cost[8] of attaining all 10 of the proposed objectives is no less

[8] App. F of this report discusses costs in detail.

Table 5.—Cost and Schedule to Satisfy Objectives Suggested for Discussion

Objectives	Total cost[a] (billions, 1984 dollars)	Duration (years)
1. Establish a global information system/service re natural hazards	2	10
2. Establish lower cost reusable transportation service to the Moon and establish human presence ther#	20	15, 25
3. Use space probes to obtain information re Mars and some asteroids prior to early human exploration	2	15
4. Conduct medical research of direct interest to the general public	6	5, 25
5. Bring at least hundreds of the general public per year into space for short visits[g]	0.5	5, 25
6. Establish a global, direct, audio broadcasting, common-user system/service	2	10
7. Make essentially all data generated by civilian satellites and spacecraft directly available to the general public	0	25
8. Exploit radio/optical free-space electromagnetic propagation for long-distance energy distribution	0.5	10
9. Reduce the unit cost of space transportation and space activities[g,h]	5	15
10. Increase space-related private sector sales[h]	0.5	25
	-$401	

[a] Costs are for development and acquisition. Operations and maintenance costs are not included, except for some launch and operations costs noted for objectives 2, 3, and 4.
[b] 5 years t. establish the settlement, and 3 visits/year at $0.1 billion each (plus basic Shuttle launch costs) over the following 10 years.
[c] On the average, one probe every 3 yeara and $0.4 billion each.
[d] $2 billion over 5 Yearn t. establish a life sciences laboratory in LEO, and $0.2 billion/year thereafter to operate it. This laboratory could also be used for materials science and other research.
[e] 5 years t. establish a LEO "lodge-habitat," and its continuing use thereafter.
[f] $0.05 billion/year in addition to DOD expenditures.
[g] $0.3 billion/year for a 15-year technology development effort to reduce space transportation Unit costs.
[h] This would also help efforts directed toward the other objectives.
[i] The actual cost could be as high as $60 billion (1984 dollars), if costs exceed initial predictions by 50%.

than $4o billion and perhaps considerably more (as much as $60 billion [1 984$]) over the next 25 years. Table 5 itemizes the estimated costs for all the objectives. Given that these estimates are made at an early stage, there cannot be great confidence in their detailed accuracy, but such accuracy is unnecessary for the illustrative purposes being served here.

If work were to commence on all of them now, the bulk of the cost would occur over the next 15 years.

Space transportation costs are not included in these estimates, except for an additional $0.1 billion (1984$) or so for each flight from low-Earth-orbit to lunar orbit. Rather, it is assumed that some 10 Shuttle surface-LEO flights per year at an average cost of about $0.1 billion (1 984$) each by early in the next decade would be budgeted for all Government-sponsored civilian R&D purposes, including those considered here.

Financing

There are many matters that must be given careful consideration before a national commitment to undertake such large, lengthy, and costly public activities could be made. Certainly among the most important are the sources and magnitude of funds that can be reasonably expected to be available.

If the funding previously spent on Shuttle development (approximately $2 billion per year) is continued but reallocated towards the initial objectives, and if the NASA appropriation (approximately $7 billion per year) is augmented by a real growth of 1 percent per year, and if truly collaborative cost-sharing international agreements could be reached whereby other friendly countries would contribute, say, an additional amount equal to one-third of this subtotal, we could look forward to approximately the following amounts being available for the initial 10 objectives:

Reprogramming of the Shuttle development effort fund level of $2 billion per year for 25 years	– $ 50 billion
1 percent per year "real growth" over 25 years applied to these objectives	– $ 25 billion
Cost-sharing by other countries	– $ 25 billion
Total	– $100 billion

Amounts spent for related space research, development, test, and evaluation by the U.S. private sector would be added to this total.

As these figures are considered, it should be kept in mind that space is a high-technology domain. Increasing private sector interest in exploiting the economic potential of space invites comparison of growth rates in other high-technology sectors. If private sector space-related sales continue at a rate of 10 percent per year (a conservative estimate for high-technology sectors), the tax revenues derived therefrom would, over the next quarter-century, be quite substantial. And to the extent that public funding of Government space activities is understood as "offset" by these tax revenues (as they sometimes are in the aeronautics area) the net cost to the public for such space activities would be substantially reduced. [9]

Clearly, under such circumstances, funding limitations would not prevent the United States from undertaking an ambitious publicly supported civilian space program throughout the next quarter of a century.

[9] App. F of this report discusses these prospects at length.

SHAPE OF THE SPACE FUTURE

There are important changes under way in how space activities are carried on. The number of important players is increasing as space expertise and experience spreads, economic considerations are becoming more important, and security considerations are already the subject of widespread debate. If the United States is to maintain its leadership role in civilian space activities, it must be prepared to make fundamental shifts i n policy and practice.



Photo credit: National Aeronautics and Space Administration

Communications satellites in geosynchronous orbit (such as Webster VI, shown here) can provide continuous coverage of large portions of the Earth's surface for relay of radio, television, and telephone signals.

International

International space activities will continue to expand, both in numbers of countries involved and in absolute magnitude of their capabilities. There is every reason to expect that the spacefaring nations of the world will find it in their interest to participate in the considered development of near-Earth space, and perhaps all countries would like to engage in civilian space activities to some extent. The OTA report on *International Cooperation and Competition in Civilian Space Activities*[10] addresses a wide range of issues arising in this area, and appendix C of this report discusses the variety of ways in which the United States and other friendly countries might, in concert, develop, operate, and use long-term in-orbit infrastructure.

Private Sector

To date, private sector interest in space has been confined primarily to the successful satellite communications business and the support of Government activities. However, there is tangible evidence that a number of private concerns will soon begin to offer assets and services on a fee-for-service or lease basis, both to the Government and to other private interests. The projected needs of space science and space applications, for example, constitute a ready market for providers of various future infrastructure system/services.

[10] *International Cooperation and Competition in Civilian Space Activities,* **Office of Technology Assessment, U.S. Congress, OTA-ISC-239, in press.**

New Role for NASA

In view of the significant changes in the way that space activities will be carried on in the future, NASA may well have to make certain fundamental shifts of attitude and operation. In the past, it has been NASA's responsibility to meet any given national space objective by itself; in the future, it should be NASA's responsibility to see that the objective is met. That is, NASA should now aspire to the much broader role of seeing that others in our private sector and throughout the world do much more of what it does today.

In the simplest of terms: if NASA is to rise successfully to the challenges now emerging in the national and international space arena, it should place relatively less emphasis on accomplishing by itself those things that our private sector or other friendly nations can satisfactorily do, either alone or with NASA assistance. It can succeed in this only by continuing to cooperate with both, and by broadening this cooperation so as to prompt and assist both to extend their space-related capacities, confidence, and commitment. And it could emphasize such cooperation in the acquisition of in-space infrastructure—i. e., a "space station."

Released from its present relatively near-term focus, NASA could concentrate more of its own professional activities on the most important and exciting of everything else in and concerning space, the things that no one else can or will do: the very best of space-related science; the cutting edge of space-related technology development; the boldest of space-related explorations and developments.

Finally, NASA and other space-related offices in the executive branch should see that their activities continue to be conducted, and the results thereof continue to be used, not only to increase knowledge and to address important social and political goals, but now also to enable our private space sector to increase its non-Government sales—the sales that generate the taxes that help to pay for Government space activities.

Chapter 2

ISSUES AND FINDINGS

Contents

	Page
General	25
NASA's Circumstances	25
Transitions	28
National Commission on Space	30
Civilian "Space Stations"	31
The Case for infrastructure in Low-Earth-Orbit	31
The Concerns About Low-Earth-Orbit Infrastructure	32
The Cost of Low-Earth-Orbit Infrastructure	33
Alternatives	33
Our Future in Space	35
Long-Term Space Goals and Objectives	35
Long-Term Space Strategies	37
Cost Reduction	37
The Private Sector	38
International Space Cooperation	39
Space as an Arena of Peaceful Cooperation	40
NASA's Changing Role	41
Non-Government Policy Studies	42
Possible Legislative Initiatives	43
Strategies for Acquiring Any New In-Space Civilian Infrastructure	43
Civilian Space Policies, Goals, Objectives, and Strategies	45
The Creation of Space Policy Study Centers	46

GENERAL

NASA's Circumstances

A general and most important conclusion of this assessment, one that touches on all its other findings, is that any serious discussion of the Nation's future civilian space aspirations and activities, both publicly funded and privately sponsored, must be carried on with a full appreciation of the present and near-term circumstances of the National Aeronautics and Space Administration (NASA).

Since soon after NASA's inception, its space programs have had two major components: 1) a core of continuing space science and space exploration activities, later joined by space applications activities, and the development of that technology specifically required to conduct them; and 2) singular major technological forays, centering on people in space. It is worth noting that while the core science and exploration activities were mandated in NASA's founding charter, the National Aeronautics and Space Act of 1958, as amended, the succession of big programs seems to continue as a matter of tradition–with the explicit approval of the President and Congress.

Such major undertakings as Mercury, Gemini, Apollo, Skylab, and Shuttle take years, even a decade, to complete, involve a large fraction of NASA's engineering staff, and cost billions or tens of billions of dollars. Because the magnitude of NASA's commitment to these undertakings is so complete, other, smaller programs—including the core science and exploration activities—are always at some risk of seeing part of their funding delayed or transferred to cover overruns in the big programs. A small percentage overrun in a major program component can represent the whole of a smaller, but perhaps equally important science or application program.

For the most part, it is this spectacular kind of activity that takes most of NASA's attention and resources, is of most interest to the general public, here and abroad, and serves the important national objective of projecting the civilian technological prowess of the United States on the world stage.

From the viewpoint of the technologists who make up most of the continuing leadership of the U.S. publicly funded space effort, these major NASA programs serve several important objectives:

- they keep NASA in the public eye in a particularly gratifying fashion;
- they attract the services and loyalty of outstanding space engineers both within NASA and the closely related sections of the U.S. private space industry;
- they allow the development of a great deal of new technology otherwise difficult to justify on a piecemeal basis–technology that allows further space advances subsequently;
- they are more difficult to interrupt or cancel than smaller and/or less generally appreciated space activities;
- once approved, they require relatively little further engagement by engineers in "political justification" activities for some time; and
- they provide perhaps the most visible and apparently effective civilian response to the widely publicized in-space activities of Soviet cosmonauts.

And to date, it is this kind of activity that has obtained the most attention, and approval, of the president and Congress. But these large programs also have another, rather troubling set of characteristics. Because they are primarily technological in nature, they are inherently difficult to explain satisfactorily to those who are not professionals or not particularly interested. They are initiated by Government technologists and their supporters who are convinced of their value, rather than being initiated in response to large segments of the general public's specifically calling on NASA to provide them. ' Perhaps most im-

'The implication here is *not* that there is *no* public support for the civilian space program in general or the big technological spec-



Photo credit: National Aeronautics and Space Administration

Dramatic manned space missions such as the Apollo 11 lunar landing have generated public support for NASA,

portant, **the completion of any one of the large, high-technology, "manned" programs faces NASA's management either with making a fundamental move toward a more equal distribution of agency funds among *all* its R&D programs, or with creating and securing support for another program of the same general character and size.**

Thus, the first successful flight of a Shuttle orbiter in early 1981 found the NASA management confronting this problem again. Within a relatively few years thereafter, either another large new program would have to begin, or a number of relatively small existing programs would have to be considerably enlarged (or new ones initiated)—or else as many as one-quarter of NASA's professional staff and approximately $2 billion per year would be lost.

Without an internal or external mandate to achieve a more nearly equal distribution of funds among all its R&D programs, NASA leaders opted to pursue another large, high-technology, "manned" program. **The particular program chosen has been the subject of study and discussion within the civilian space community for decades: "the space station" program.** After

---

taculars in particular, but that this support might be broadened if wide public discussion were encouraged. One need only compare the extent to which the public, to date, interests itself in space issues with the extent to which it interests itself in education, health services delivery, housing, defense, transportation, etc.

detailed engineering study, the public acquisition of in-space infrastructure under this program would proceed for several years at an average rate of some $2 billion per year. It would involve the development of high technology, much of which would address the problems attendant on seeing people reside and work in space in a permanent fashion under safe and sanitary conditions. Its buildup could be phased to match the reduction in the Shuttle development program so that, overall, NASA's present and anticipated "budget envelope" could be maintained, and the Shuttle program's professional skill mix could be satisfactorily reassigned.

Given, first, its institutional end of maintaining its current size and, second, its choice of a space infrastructure program as means to attain that end, NASA has been somewhat reluctant to consider new modes of acquiring the infrastructure envisioned. For example, NASA **could** choose to employ a great deal of already developed, space-qualified, and already paid-for technology. It **could** prompt the U.S. private space industry to come forward with proposals to provide major infrastructure elements to NASA in an economical fashion, elements that the private sector, using its own resources (including private funds), would design to the Government's performance specifications (rather than to detailed design specifications under contract). It **could** seek international collaborative arrangements under which foreign partners would bear a substantial fraction of the present $8 billion estimate,[2] thereby significantly reducing the cost to U.S. taxpayers. However, with the two givens, these new approaches could result in an insufficient program base to maintain the agency's present size and, perhaps, even its present character as an independent, civilian, national resource.

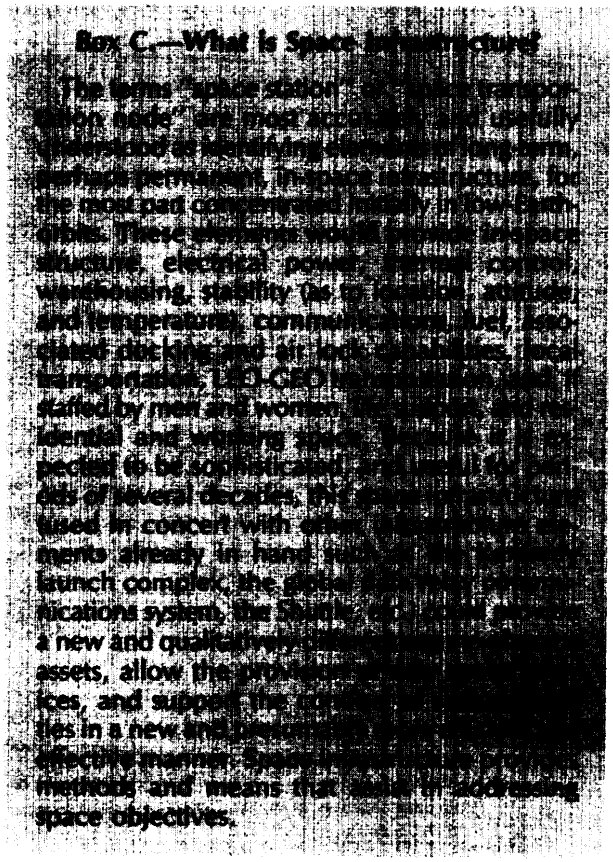

In view of NASA's internal circumstances and the many other external desiderata which its resources could alternatively address, the question arises: is a "space station" program the best way for NASA to spend the foreseeably available $2 billion per year[3] to serve the needs of the Nation—and the world? The President and Congress have just approved a "space station" program in principle, and allocated $150 million to commence engineering studies—studies now expected to take 2 years. Decisions as to the character, magnitude, and pace of this program would be made after the completion of these studies, and any others that Congress might request.

If: 1) NASA'S basic decision not to move toward a more nearly equal distribution of funds among all its R&D programs remains unchanged, 2) its overall aspirations for its "space station" program are not realized, and 3) **no adequate substitutes appear and are approved within the next 2 years, then the basic character of the present U.S. publicly funded civilian space pro-**

[2]It is important to appreciate that this *$8* billion figure covers only the initial capital outlay, not the continuing operations and maintenance costs or subsequent capital outlays to acquire additional capabilities.

[3]The $2 billion per year figure is predicated upon two projections: that NASA's overall budget will remain level in constant (1984$) dollars at somewhat over $7 billion per year, and that the roughly $2 billion per year currently spent for Shuttle development will be made available for space infrastructure acquisition.

gram itself could be placed in question. If NASA's professionals were convinced that they could not see a reasonable future for the exercise of the skills they so successfully displayed in the Shuttle program, they would soon begin to explore employment alternatives—and the more accomplished, more imaginative, and more independent employees, which any outstanding R&D organization simply must retain, would be the ones most likely to do so. One of the clear alternatives would be to work on what now appears to be another rapidly growing high-technology space program area—that of the space elements of the new military Strategic Defense Initiative (SDI), a program now headed by a former associate administrator of NASA who was responsible for the Shuttle development program.

If large numbers of professionals left NASA, and if their leaving the civilian space R&D area were accompanied by similar departures from that part of the private space industry long associated with NASA, an already significant and increasing imbalance between our military and civilian publicly funded space programs would be magnified. A vigorous, independent NASA has served the Nation well; any trend toward reducing it to mere adjunct status cannot be viewed, in the overall national security context, without concern.

Thus, the NASA management may have "bet the company" on the successful outcome of a campaign to obtain approval for one more large, new, high-technology, publicly funded civilian space program. Unfortunately, even if approval is received, such a program could foreclose, perhaps for 5 to 10 years, the possibility of NASA's undertaking other, more desirable options or its effecting any fundamental changes either in its major program mix or in the way it acquires space technology. Yet, in OTA'S judgment, serious consideration must be given, now, to preserving these options and making these changes, if NASA is to maintain U.S. space leadership. For fundamental shifts in other national and international circumstances that will importantly affect the conduct of future space activities are already under way.

Just as unfortunately, because the Shuttle development program is expected to be essentially complete within 2 years, any moves to effect large and desirable changes in the NASA program mix and/or acquisition processes and/or international collaboration policies must also be made within that time. Making such moves effectively would call for a high degree of institutional imagination and political statesmanship by both branches, and NASA particularly.

Whatever else the executive branch and Congress decide to do at this decision point, they should resolve that they will not be required to face such circumstances again. The publicly funded civilian space program of the United States is too important, and the scientists and technologists heading the program too competent and responsible, to continue to be treated with the form of "benign neglect" that has been the rule since the successful completion of the grand Apollo program.

Transitions

Transitions are under way. And they are so fundamental, and moving so rapidly, that we



red au

N p g a b b

should not be surprised to see them have significant, although presently unpredictable in detail, impacts on any "space station" program, even in the next few years. The key institutional question is this: will U.S. leaders see to it that NASA meets these transitions head-on and moves out smartly to "lead the parade" by orchestrating the growing and increasingly varied foreign and domestic space interests?

For nearly a quarter of a century, the United States and the Soviet Union were the only major players in the civilian space arena.[4] Except for satellite communications, all of the U.S. civilian space activities were formally conceived, funded, and managed by the Federal Government, primarily NASA.

Similarly, during this interval, NASA, the National Oceanic and Atmospheric Administration (NOAA), and the National Weather Service decided, with regard to the weather and climate area, what space-related scientific, technology-development, and infrastructure-acquisition programs should be conducted; developed their characteristics in some detail; mounted almost always successful campaigns with the President and Congress to receive direction, legal permission, and Federal funds for their conduct; and then conducted them using large numbers of in-house scientists and engineers and contracting with their counterparts in universities and the space industry.

NASA has frequently been willing to consider international cooperation in science with other countries, and has reached cooperative agreements with many countries—agreements that saw other countries spend significant amounts of money to support their space professionals and to provide them with equipment in order to effect such cooperation. But there has yet to be any major cooperative agreement reached that would see truly significant equipment jointly designed and produced by the United States and one or more other countries that would result either in important technology sharing, in U.S. program risk sharing, or in large savings to the public purses The Department of Defense (DOD) often does so within NATO and elsewhere, as do major aerospace companies in order to reduce their own financial, technological, and market risk exposure in large complex programs. NASA officials are making overtures to other countries regarding their participation in any "space station" program, but it remains to be seen whether these overtures will result in the kind of collaboration that would realize major cost savings to the United States.

With a single recent exception,[5] there has been no important instance in which our private sector has set out to develop major items of space-related technology of acknowledged central importance to NASA programs on its own, using its own resources—including financing—to do so. **All such critical elements are still procured by the Government, with Government funds and some considerable Government oversight in the process.**

However, over the past few years, international civilian space circumstances, the circumstances of our own space-related private sector, and the attitude of our Government toward the civilian space area have begun to undergo fundamental shifts-shifts that, in the next few years, cannot but have great impact on what our publicly funded civilian space program does and how it does it.

As a result of the sustained and generous assistance of the United States, and by working in close concert with NASA and the U.S. space industry over the past few years, several other countries have conceived of, developed, produced, installed, and used substantial space and space-related equipment. Such equipment, some of it designed primarily for scientific research, some

[4] **Since the adoption of the 1958 National Aeronautics and Space Act, the United States has maintained identifiably separate civilian and military space programs, though there has always been cooperation between the two. The extent to which one can make a similar distinction with respect to Soviet space activities remains a vexing question.**

[5] **Spacelab is the exception that proves the rule. NOAA, on the other hand, is moving to obtain further contributions of space-related technology through the Economic Summit process, and is pursuing the development of international polar-orbiting meteorological satellites; both of these initiatives could result in important cost savings to the U.S. public program.**

[6] **The exception is the agreement, on an 'upper stage, between NASA and the Orbital Science Corp. of Vienna, VA. McDonnell Douglas upgraded the Delta and developed the Payload Assist Module (PAM) using its own funds, and other private groups are now developing expendable boosters of various kinds.**

primarily for commercial applications, is of a sophistication that often matches that of U.S. equipment, and of a sales magnitude that, in some instances, now clearly offers serious competition to the generally acknowledged preeminence of the United States (cf. Spacelab; Ariane; the Canadian Remote Manipulator System; DBS spacecraft; etc.).[7] These countries now have sufficient confidence in their own skills and experience to encourage them to ask for a much closer kind of cooperation with the United States. It will not be long before they can and probably will insist on it, for they will have the ability and the motivation to "go it alone" if they cannot see that their basic interests would be adequately served by the kind of cooperation extended to them by the United States.

Similarly, one of NASA's outstanding successes (shared with DOD) has been that of shepherding the aircraft, electronics, chemical, and other high-technology areas of our private sector into the civilian space business. This is now a very sophisticated and confident part of our overall national commercial-industrial capability. But significant segments of the private space sector are increasingly restless with the prospect of having to produce high-technology space items under what they perceive to be the no-longer-necessary, and wasteful, "close control" of NASA managers.[8]

Also, the past few years have seen a growing number of entrepreneurs beginning to enter the civilian space area. These "newcomers" are not limited to those who would **use** the assets and services that NASA expects to acquire; some would **provide** such assets and services to both the Government and others in the private sector on what they believe to be inviting financial terms. Both the President and Congress are clearly determined to see that the private sector plays a much more prominent role in the civilian space area generally, that it is encouraged to make major investments therein, and that the country finally begin to reap the large and direct economic benefits so long hoped for by civilian space leaders.

Finally, the great, persistent, and projected deficits in our Federal budget now require Congress to take an even more careful look at deferrable expenditures, especially "new starts. " Indeed, the central issue of the President's request for congressional approval of the first phase of a "space station" program is that of its capital cost, even though NASA now estimates the size of the initial portion of the program (in constant 1984 dollars) to be less than one-half that of the Shuttle program, and not much more than 10 percent of the Apollo program, and its acquisition schedule would seemingly not require NASA's budget to be increased over today's amount.[9]

These new national and international circumstances have begun to command the attention of the executive branch, and important first steps toward addressing them have been taken. However, although many of the leaders of the U.S. publicly funded space program are convinced of the importance of these circumstances, few of them have the professional and business experience required to ensure an effective response. Furthermore, it appears that most of those beneath the top management levels as yet have little enthusiasm for making indicated changes. And, indeed, it is not clear that leaders of the executive branch have thought out, clearly, just how far they are willing to see innovative arrangements arrived at that would carry NASA and NOAA into much closer collaboration with other countries and with our own private sector.

National Commission on Space

In July 1984, Congress enacted, and the President signed into law,[10] the National Aeronautics and Space Act of 1985. Title II of this Act estab-

[7] For a thorough discussion of this issue, see the OTA report *International Cooperation and Competition in Civilian Space Activities,* in press,

[8] At least some in the private sector believe that they can do as good work on space hardware generally as they do on commercial air transportation and communications satellites, and they are willing to assume the financial responsibility of doing so and to risk grave financial penalties if they fail.

[9] However, consider the following: "In recent decades the average overrun on major programs, in constant dollars and constant quantities, has been slightly over 50 percent. The average schedule milestone has been missed by a third of the time initially projected. The average time to develop new systems has, until recently, been increasing at the rate of 3 months per year . . . each year. " Norman R. Augustine, "The Aerospace Professional . . . and High-Tech Management," *Aerospace America,* March 1984, p. 5.

[10] Public Law *98-361.*

lished a National Commission on Space. The deliberations of the National Commission can be expected to have a fundamental impact on the entire civilian space future, including the future course of any civilian "space station" program. This conclusion is based on the assumption that the Commission will provide an appropriate mix of prestige, broad concern for the national interest, technical expertise, and diverse outlook.

There are great opportunities now perceptible in the civilian space area, but the rapidly changing circumstances that make their achievement possible have raised difficult issues and created institutional inconsistencies. If the new opportunities are to be realized, these issues must be faced and the inconsistencies resolved. OTA has earlier expressed the view that many of these issues and inconsistencies cannot now be dealt with adequately by the annual authorization process and that, therefore, some more fundamental mechanism, such as a Presidential Commission, should be created. The newly authorized Commission is the first opportunity in a generation for Congress—and the Nation—to set a truly fresh course in space. It is critically important to the Nation generally, and to a successful U.S. future in civilian space activities specifically, that the Commission be successful.

NASA now plans to spend the next 2 years making studies of a fairly specific low-Earth-orbit (LEO) infrastructure complex that it would acquire, operate, and use in a manner similar to the Shuttle. This plan was set in motion some years ago. **Over the next year and a half, the deliberations and eventual findings of the National Commission could offer NASA, and others seriously interested in the space future, the opportunity to develop new program options, and to compare these new options, new methods, and new attitudes with the civilian "space station" program as currently defined.**

Afresh, basic and uninhibited review of policy issues might well result in a fundamental change of NASA views on the following matters:

- **the appropriate character of the "space station" program;**
- **the character and mix of its various large, long-range programs;**
- **the ways in which it might orchestrate the civilian space interests of all friendly countries; and**
- **the ways in which it could act to prompt greatly increased private sector investment in space.**

CIVILIAN "SPACE STATIONS"

The Case for Infrastructure in Low-Earth-Orbit

on balance, a persuasive case can be made for acquiring some long-term infrastructure in near-Earth space, some of which would allow a human *work force* to be retained there for extended periods.[11] This case rests primarily on tangible rather than intangible considerations.

The persuasive tangible reasons are that the United States would then be able to explore the possibility of more efficient transport staging between LEO and geostationary orbit (GEO), the Moon, and beyond; to commence certain important life science[12] and materials science experiments early in the next decade, the conduct of which would otherwise border on the impossible; to warehouse space assets and consumables, so as to improve the efficiency of very costly surface-LEO transportation; to aspire to much more ambitious and dependable servicing of ever larger and more sophisticated, and therefore more costly and complex, space assets, thereby containing their total life-cycle costs and increasing their effectiveness; and to undertake new

[11] It is of course assumed that the character and location of the infrastructure elements would be chosen to meet the specific, important expressed needs of those expected to use the services that these elements would be expected to provide—i.e., not chosen by the technologists who would design, produce, and install them.

[12] Life science research could include studies of long-term response to in-space conditions (in preparation for possible staffed expeditions to the Moon, Mars, or the asteroids) as well as studies relevant to the general human population on Earth.

and innovative space activities with confident freedom.

These reasons reflect not only the many years of conceptual studies of infrastructure arrays that could support space activities but, as well, a general consensus as to the value of space infrastructure elements gained with actual experience in Skylab, the Shuttle Orbiter, the Soviet Salyut, Soyuz, and Progress, the Tracking and Data Relay Satellite System (TDRSS), Spacelab, the Manned Maneuvering Unit (MMU), the West German SPAS platform, the Canadian Remote Manipulator System (RMS), etc.

Indeed, it seems likely that, in retrospect-some two decades hence—at least a large portion, perhaps all, of the space infrastructure capabilities now advanced by NASA as necessary will be seen to have been so. But this eventuality gives no guidance as to how and when the various elements should be acquired.

Another reason advanced is that, eventually, there may be important economic payoffs from materials processing in space that would require the use of space infrastructure. What is now required is a great deal of imaginative and sound in-space basic and applied research in the materials science area.

The intangible reasons for acquiring such infrastructure—reasons of maintaining space leadership generally, of creating further heroic role models, of exhibiting our capacity for high-technology development, of enhancing national security, of maintaining a strong NASA, etc.—are much less compelling. "Space buffs" and perhaps some in the private sector (those who have called for a long-term Government commitment to provide R&D facilities in space before they would consider investing there themselves) argue that general-purpose space infrastructure (i.e., a "space station") would address such great and intangible purposes. But there is no evidence that large segments of the general public agree with this assessment, and they have not been offered the opportunity to express their views on other major space ventures that might more forcefully address such intangibles. A number of alternative intangible goals have already been put forth; undoubtedly, more will be articulated in the future.

The Concerns About Low-Earth-Orbit Infrastructure

But while the case to be made for acquiring some long-term, habitable, LEO infrastructure is persuasive, **there is no compelling, objective, external case either for obtaining *all* of the particular array of elements that** NASA **now describes under the rubric of "the space station," or for obtaining this or any other array in the general manner that NASA is now expected to pursue, nor for paying the particular public cost that it now estimates is required to do so.**[13] (The important **internal** case for proceeding with a large, early "space station" program is discussed above.) As the infrastructure would be of a very general-purpose nature, to be used to support myriads of conceptual uses, few of which have been sharply defined or have gained wide acceptance as important objectives of our publicly funded space program, there is no necessity for obtaining all of it soon. And, under these circumstances its value to the space program is quite difficult to estimate objectively.

Three groups are particularly concerned about a nearly $10 billion (1984$) commitment to a "space station" program:

- those, particularly space scientists, who fear that such a relatively large commitment would represent a hazard to their own space interests;
- those space professionals who would prefer NASA to take a more measured, evolving, learn-as-we-go approach; and

[13] Some contend that the substantial and growing U.S.S.R. space infrastructure (including Salyut, Soyuz, Progress, and Cosmos 1443-class modules) constitutes a valid, and important, justification for the United States to mount a comparable, if not more capable, program. This report does not address this contention. However, even if keeping up with the Soviets or beating them at their own game were to become the motivation for a major civilian space infrastructure acquisition program, it does not follow that such a program would resemble that which NASA has described. Indeed, it might be quite different. See the OTA Technical Memorandum, *Salyut: Soviet Steps Toward Permanent Human Presence in Space,* OTA-TM-STI-14, December 1983.

- those particularly concerned with the commencement of any new and costly Federal initiative who are sensitive to its impact on the Federal budget even if it falls within NASA's present, and hoped-for, "budget envelope" of some $7 billion per year.

Of course, if the projected capital cost were well less than the near $10 billion (1 984$) now estimated for the initial operating capability (IOC) (i.e., the initial phase of the infrastructure acquisition program that NASA has in mind; the full cost of the program would approximate $20 billion [1984$] by the year 2000), the concerns of these groups would be significantly lessened.

The Cost of Low-Earth-Orbit Infrastructure

The eventual cost of any in-space infrastructure depends on the chosen size, capability, degree of new technology involved, and method of acquisition. It is not now possible to make another estimate of the IOC cost that is significantly different from that made by NASA for what it describes as "the space station" in which one would have greater confidence. There simply are too many large potential "cost drivers, " the significance of which cannot be judged under today's rapidly changing circumstances.

All of the experience with the acquisition, over a relatively long time, of large amounts of space technology, much of it to be newly developed, suggests that the $8 billion (1984$) figure will eventually be seen to have been a floor, not a ceiling, on cost. In spite of, or rather because of, this experience, NASA is determined that it will not be repeated.[14]

There are several options available relating to acquisition practices, international collaboration, and the more imaginative use of the U.S. private sector that, if effectively grasped, could reduce the cost impact on the Federal budget. Acquisition of in-space infrastructure is inherently different from the acquisition of a Shuttle or a commitment to develop and deploy those resources required to send a person on a safe round-trip to the Moon. To use NASA's own earlier, correct, and quite illuminating expression, space infrastructure can be bought "by the yard."[15]

One thing is clear: NASA, if it wished, or were persuaded, could opt for obtaining now a "core" fraction of the total infrastructure capability that it believes that the country will need over the long term—a core fraction that would allow many useful scientific studies to be made and infrastructure support operations to be explored and evaluated, at a net U.S. capital cost of one-quarter to one-third of the $8 billion that it now seeks. To this core fraction other elements could be added incrementally as experience is gained in its use and as requirements become sufficiently persuasive.

The technological and programmatic options exist for doing so. There is clearly a great variety of U. S., other Government, and private in-space infrastructure (some already in hand, some in development, some that is receiving detailed study) from which selections could be made to provide various kinds and amounts of in-space assets and support services—assets and services that would be expected to allow some new activities to be undertaken, and to increase the efficiency and effectiveness of others.

Properly encouraged by NASA, private sector firms are almost certain to come forward in the next few years with proposals that would provide some of the desired infrastructure elements and/or support services now thought to require Government development and acquisition. Some such developments are already under way.[16]

Alternatives

Some large sophisticated civilian space ventures such as the Space Telescope are pushing at the frontiers of technology. This is not (or, at least, need not be) the case for in-space infrastructure. Indeed, there is little doubt that, with appro-

[14] See Augustine, op. Cit.

[15] "Space stations are the kind of development that you can buy by the yard." James Beggs, NASA Administrator; *Committee Report of Hearings before the Subcommittee on Science, Technology, and Space* (Senator Gorton, Chairman) of the Senate Committee on Commerce, Science, and Transportation, Mar. 8, 9, and 15, 1983, p. 51.

[16] These developments are discussed in some detail in ch. 3 of this report.

priate congressional approval and funding, the Nation could see the capabilities described by NASA in place and operating satisfactorily well before the middle of the next decade. Because, in OTA'S view, technology development for space infrastructure envisioned in the near-term should present no significant problem, it has not been given central attention in this assessment. However, some general observations on technology matters may be useful here.

- Three basic kinds of in-space infrastructure elements are worthy of separate, but related, attention:
  1. one or more relatively large central complexes, with work crews as required– complexes where the bulk of the relatively innovative work could be carried on;
  2. normally unattended "free-flying" platforms, nearby or remote from such complexes, where various equipment could carry on activities precluded by the orbital locations, micro-gravitational circumstances, or effluents associated with a central complex; and
  3 .transportation between the surface and such a complex, and between the complex and the platforms, and between the complex and much higher orbits or even out to solar system distances.
- OTA is not persuaded that all of the particular capabilities now being emphasized by NASA, when measured against alternatives, are the ones that have the greatest value to the Nation's publicly funded civilian space program. NASA's present selection of the initial set of infrastructure elements and their location in space would provide many of the desired support capabilities. But they would not serve the interests of those attempting to service remote-sensing platforms of importance to weather and climate from low, near-polar orbits, or from geostationary orbits, nor the interests of those in the private sector whose communications, and perhaps navigation/position-fixing, satellites are located in much higher, including geostationary, orbits, nor the interests of those who would like to see less costly transportation provided between the Earth and GEO, and the Moon, Mars, and asteroids.
- Providing safe, sanitary, and suitable infrastructure elements 'for long stays by human crews will be costly. But however much some may be interested in exploiting unattended sophisticated machinery in LEO, the state of the art is not yet capable of providing the wide range of functions and confidence that human workers can provide until well after the early 1990s. However, given the substantial emphasis that, to date, NASA has placed on human work crews in space, it would be the prudent course, now, to raise the level of support for the development of in-space automation and remote operation from Earth. Emphasis on R&D for space-related automation and remote operation could also be expected to have a salutary influence on automation R&D for applications here on Earth, U.S. industrial competitiveness, and its introduction into commercial-industrial activities.
- There are two quite different reasons that can be advanced for the development of new technology to be employed in space infrastructure. One reason is to provide capabilities there that present technology cannot; the other is to reduce the life-cycle costs of its ownership—i.e., to reduce O&M costs and extend its useful lifetime. Both are laudable objectives. But they must be balanced against the simple fact that "there is no such thing as enough money," and any decision to provide anything more (or less) than the vitally needed capabilities, and to do so at an earlier than necessary date, and any decision to try to predict the far future so as to provide for all possible uses of such capabilities, will simply result in at least the unwarranted, and perhaps wasteful, use of funds. OTA is not convinced that a good enough balance has been struck between the competing demands for funds for infrastructure and funds for other space activities.
- Diligent and imaginative exploitation of the Shuttle fleet, along with use of free-flying platforms and local in-space transportation systems for individuals (all already under way), could provide much useful information and experience that would be of great value in making later decisions about the characteristics and operational employment

of long-term in-space infrastructure. Over time, this broadening experience will increase the confidence with which eventual infrastructure selection decisions are made.
- Significant extensions of the time that an Orbiter could remain usefully on-orbit (to, say, double or triple today's 7 to 10 days) would provide many of the capabilities desired for work crews in permanent infrastructure, and provide them sooner and at relatively modest cost, thereby relaxing the cost and schedule requirements associated with the latter.
- Space lab's operational characteristics also could be amplified at relatively modest cost, with the same helpful consequences.
- Private sector development of large in-space electrical power supplies, occasionally attended platforms, and other infrastructure elements could be successfully completed before the end of the decade. If done with imagination and economy they could offer attractive alternatives to Government development and acquisition of these capabilities.

OUR FUTURE IN SPACE

Long-Term Space Goals and Objectives

The United States can now make major strides in the civilian space area, but it is not adequately prepared to do so.

We need to "re-visit" the substance of the 1958 Space Act, reaffirm those of its policy principles that are judged to be still valid, add others as appropriate, and lay out a set of new goals that are responsive to contemporary and foreseeable circumstances, interests and values. An initial family of end objectives also should be identified that would address those goals over the next years and decades.

U.S. civilian space activities should be designed to protect, ease, challenge, and improve the human condition, In addressing its long-term goals, the Nation should strive to move its space interests and activities closer to the mainstream of public interests and concerns, maintain space leadership, enhance national security, and position its civilian space activities to respond to finding the unexpected in the cosmos.

For the purpose of prompting public discussion, OTA has developed an initial set of such goals, and a family of initial objectives to address these goals. Chapter 6 of the assessment treats these in some detail. The objectives are suggested for consideration as additions to, not substitutes for, the continuing "core" programs of space science and exploration, space applications, and the development of the technology needed to conduct all three. The family was generated to encourage much greater and more direct involvement of interested segments of the general public in civilian space activities, and to strive for economic, political, and cultural ends in addition to the scientific, exploration, and technology-development ends of today. And the family contains some elements that are simply "bold. "

The national goals OTA proposes for discussion are:

- to increase the efficiency of space activities and reduce their net cost to the general public;
- to involve the general public directly in space activities, both on Earth and in space;
- to derive scientific, economic, social, and political benefits;
- to increase international cooperation and collaboration in and for space;
- to study and explore the Earth, the solar system, and the greater physical universe; and
- to spread life, in a responsible fashion, throughout the solar system.

Brief descriptions of the national objectives suggested to prompt public discussion follow; they are not rank-ordered.

- A space-related, global system/service could be established to provide timely and useful information regarding all potentially hazardous natural circumstances found in the

Earth's space and atmosphere, as well as at and below its surface.

- A transportation service could be established to and from the Earth's Moon, and a modest human presence established there, for scientific and other cultural and economic purposes.
- Space probes could be used to obtain the information and experience specifically required to plan for further exploration of the planet Mars and some asteroids.
- Medical studies of direct interest to the general public, including study of the human aging process, could be conducted through scientific experiments that compare physiological, emotional, and social experience in the absence of gravity with experience gained in the conduct of related surface studies.
- At least hundreds of members of the general public per year, from the United States and abroad, could be selected on an equitable basis and brought into space for short visits there.
- A direct audio broadcasting, common-user system/service could be established that would be available to all of the countries of the world on an economical and equitable basis.
- In general, all of the nonclassified and nonprivate communications from, and nonproprietary data generated by, all Government-supported spacecraft and satellites could be made widely available to the general public and our educational institutions in near-real-time and at modest cost.
- Radio and optical free-space electromagnetic propagation techniques could be exploited in an attempt to allow reliable and economic long-distance transmission of large amounts of electrical energy, both into space for use there, and from space, lunar and remote Earth locations for distribution throughout the world.
- The unit cost of space transportation, for people and equipment, between the Earth's surface and low-, geosynchronous-, and lunar-Earth orbit could be sharply reduced.
- Space-related commercial-industrial sales in our private sector could be stimulated to increase at a rate comparable to that of other high-technology sectors, and our public expenditures on civilian space assets and activities could reflect this revenue growth.

Under present circumstances, the infrastructure that NASA would acquire in its "space station" program is best described as general-purpose, i.e., designed to support well over 100 in-space activities. As a consequence, it must contain a large number of sophisticated and costly elements, and there is considerable difficulty in setting objective acquisition priorities among them and acquisition schedules for all of them.

Were a specific family of space end objectives established, it would then be much less difficult to establish which are the more important in-space support assets and services that are required, and the time by which they would need to become available.

A rough estimate of the cost of meeting this family of objectives over the next quarter of a century amounts to some $40 billion to $60 billion.

To put this cost into perspective, it should be noted that:

- completion of the Shuttle development program would reduce NASA expenditures by $2 billion per year, or $50 billion over this interval;
- if the 1 percent per year "real-growth" principle is accepted and is extended indefinitely, another $25 billion would thereby be provided;
- collaboration with other countries could provide the equivalent of perhaps another $25 billion; and
- the private sector should be able to reduce costs and make direct space R&D investments that, together, could amount to the equivalent of billions of dollars.

Clearly, under such circumstances, funding limitations would not prevent the United States from undertaking an ambitious publicly supported civilian space program throughout the next quarter of a century.

Long-Term Space Strategies

If Congress and the President together re-establish a formal set of basic civilian space goals, they—and the general public—could turn their attention to identifying a family of specific objectives to address them. Then, on a year-to-year basis, as these plans were completed to the satisfaction of both branches, Congress could decide which one(s), if any, to pursue as technological, financial, political, and other circumstances suggest and allow.

In the case of each objective, detailed program plans could be laid out for attaining it. Such plans could:

- identify required technological developments and space infrastructure support capabilities;
- identify operational and/or political concerns;
- reflect circumstances in the civilian space area generally, both here and abroad;
- estimate the schedules and costs to accomplish each;
- judge who would be expected to be the major participants in their conduct;
- judge what the most likely end results of their successful completion would be;
- identify who would benefit from their successful completion, and what sources of funds should be looked to to meet both initial capital costs and any ongoing O&M costs; and
- suggest who would have the responsibility for any long-term ownership, operation, maintenance, and use of assets produced in the program.

Every 5 years or so, a review of the progress of programs addressing the initial list of objectives could be conducted as at the outset, and a new family established. In this fashion, Congress would always have before it well-thought-out civilian space activity and investment options—options to which a great deal of professional study and general discussion had already been given before any decisions to proceed were required.

In this general fashion the two vital questions of "can we do it?" and "should we do it?" would be separated, and the latter could be taken up by our political process in a more paced, thoughtful, and confident manner.

It is helpful to remember that broad, public, national debates on other important and *com*plex issues–on housing policy, for instance, and defense policy–take place regularly. While it is true that, historically, there has been little or no national debate on civilian space issues, that is because the Nation's space capabilities are only now coming of age—in the sense that after 25 years real options, worthy of discussion, finally exist.

Cost Reduction

However else the publicly funded space activities of the United States might be described, they certainly would have to be characterized as being very, very costly. Today, the kind and number of space activities is no longer hindered by ignorance of the physical characteristics of the Earth's space domain, by concern about the reliable in-space lifetime of well engineered and tested equipment, or by fear that men and women going into and remaining in space for as long as weeks at a time would be harmed. The unit cost of these activities is the greatest inhibition to our development and use of space. If these costs were lowered by 10 to 100 times, many individuals and organizations would be attracted to doing things in and concerning space that today are not seriously considered or even thought of.

Consequently, if space is ever to be widely used, a fundamental thrust must be to reduce these unit costs sharply and across the board—and particularly the cost of space transportation. The Shuttle is an outstanding technological and operational success, but achieving the objective of a much lower dollar per pound cost for passenger and cargo transportation between the Earth's surface and LEO, GEO, and beyond still remains to be accomplished.

Some elements of space infrastructure now under consideration by NASA for the first (IOC) and second (full-capability) phases of its "space station" program could improve the efficiency

of Shuttle use and offer the promise of lowering the unit cost of LEO/G EO/Lunar trips, and these elements should be singled out for early and specific attention. But cost reduction is such a fundamental matter that it should receive major support by NASA, and by the Department of Transportation, and by our private sector generally, and this support should call out for technological, operational, and institutional innovation, and the objective, tough-minded, pursuit of any such innovations that show significant promise.

There are many opportunities open to NASA for reducing unit costs in its own acquisition processes, and these are spoken to in some detail in appendix D.

The Private Sector

Both the President and Congress have expressed their determination to see the private sector play a much more prominent role in our civilian space area, and NASA and NOAA must pay this determination particular heed. But it is OTA'S view that, as yet, this serious matter is not receiving all the attention within the executive branch that it warrants, except perhaps at the highest levels. " This lack of attention seems to result from the fact that most of the space engineers and scientists in the Government simply do not have the professional and business experience required to work closely and imaginatively with the private sector. Perhaps even more important, their long-term experience within the Government "space club" has not provided them with the perspective to appreciate how important it is to the future of the publicly funded space program that the private sector assume this more prominent role.

In general, most NASA and NOAA scientists and engineers can appreciate that successful private sector investment in the civilian space area (as well as any other area, for that matter) will result in increased employment opportunities, the production of needed and desired capital goods and commercial services, the strengthening of our economy generally and our international trade position particularly, etc., and do express the general sense that these are laudable national objectives. Yet almost all are still more interested in addressing their own internal science and engineering agendas.

There is another aspect of the successful interjection of large-scale private sector activity into the civilian space area that is perhaps most important to the long-term prospects of the publicly funded portion of these activities: they could increase the tax base and increase tax revenues.

Today, U.S. private sector space sales amount to some $2 billion per year, are increasing at an average annual rate of some 15 percent per year, compounded, and are probably generating a total of some $½ billion in taxes of all kinds. It appears to be a reasonable conclusion that such an average annual rate of increase could well be maintained for at least the next decade or two.

Such a rate of commercial and industrial space-related sales- and tax-revenue increase could figure most importantly in the future of the publicly funded civilian space program. Already, today, while the Federal outlays for this program cost some $7 billion per year, private sector space sales return some $1/2 billion annually in the form of taxes. Were the 15 percent per year, compounded, rate to continue throughout the end of this century (and setting aside consideration of any negative impact that this growth could have on other segments of our economy), the resulting tax revenues could approach half of our public cost for supporting a civilian space program of today's magnitude. indeed, in 20 years these growing tax revenues could equal the cost of such a public program. And, by then, private sector space-related R&D activities also could be funded at a level of billions of dollars per year.

The funds now being spent on NASA and NOAA programs are "discretionary" not "entitlement" funds. At some time in the future, our national financial circumstances could prompt serious questions to be raised about the continuance of such large, deferrable, expenditures. Of course, there are arguments that can be, have been, and would be advanced for not reducing the present level of such public expenditures, but these levels have been sharply curtailed in the past. To the

[17] **The July 20, 1984, issuance by the White House of a "National Policy on the Commercial Use of Space" fact sheet is an encouraging development.**

extent that objective evidence of the direct importance of the R&D and other activities of NASA and NOAA to this kind of economic growth is in hand, it is an argument for the continuation of these activities.

OTA concludes that two important, perhaps the most important, activities that NASA could undertake today, and for the indefinite future, would be to reduce the unit cost to the private sector of their conducting activities in space, and to be of assistance to them in their making productive investments in space.

Developing methods of truly useful and acceptable assistance could well be a thorny matter, inasmuch as in many commercial-industrial-financial areas there is a somewhat adversarial relationship between the Government and the private sector. And for some time the Government will continue to be the largest purchaser of any private sector space goods and services. Consequently, just as in, say, the supercomputer and nuclear energy areas, the space area will have to see the appropriate roles of the Government and the private sector sorted out to ensure that the interests and responsibilities of each are clear, so as to best serve both—and the Nation.

Finally, it can be anticipated that the private sector's particular concern for cost reduction will eventually result in lowered costs in public space activities also.

International Space Cooperation

For most of the space age, there has been considerable cooperation in space activities between the United States (by NASA, NOAA and DOD) and several other friendly countries—effective and useful cooperation. The changing circumstances of the civilian space area call for a reappraisal of the kind and magnitude of cooperation that now should be sought.

The OTA report *International/ Cooperation and Competition in Civilian Space Activities,* studies this area in some considerable detail; here we will confine our conclusions to two:

1. The European Space Agency (ESA), several of its major member countries, Japan, and Canada have evidenced interest in working closely with the United States on a "space station" program. Now may be the time to inquire as to whether our best interests, and the interests of at least some of these countries, would be best served by moving beyond yesterday's and today's kind of cooperation, and to attempt more direct collaboration or even joint venturing with them on any such program.

   As yet, NASA appears to be giving insufficient thought to establishing the kind of multi-national, interleaved, development and production program of the type often entered into by the Department of Defense in NATO and elsewhere, and by some of our large private sector organizations and their analogs in other countries.

   In the DOD case, considerations of military security, the additional complexity of working on programs involving other countries, the hazards of undue technology transfer, and eventual commercial "spinoffs," have oftentimes been resolved, to mutual advantage, in favor of sharing costs and important professional skills. There may be, indeed, similar, legitimate concerns about technology transfer arising in any future international civilian infrastructure development program. However, the technology developed in such a civilian program would, in the main, be general-purpose, and the cost-sharing incentives would remain.

   The general economic circumstances of many of these countries are basically sound; they desire to work with us on civilian space matters in general, and any "space station" program in particular; they have exhibited technological prowess in Spacelab, the Canadian Remote Manipulator System, Ariane, and various communications satellites provided to INTELSAT. They were willing to trust the good offices of the United States and NASA in going ahead with the $1 billion European Spacelab program–a program that could be rendered valueless at any time that the United States were to withdraw the opportunity of their employing *it with* the Shuttle.

   Given all of these circumstances, it is not beyond imagination that a major international collaborative civilian "space station" pro-

gram could be negotiated that, among its other virtues, could lighten the total burden on our public purse perhaps by as much as $2 billion to $3 billion. This is not the approach to dealing with other countries on any "space station" program that is now being taken by NASA. The present approach is one of asking other countries to add funds to the United States' estimated and anticipated $8 billion commitment. The alternative approach has not been debated in the United States outside of NASA.

The alternative approach is being explored by NOAA: NOAA is soliciting important cost-sharing, perhaps as much as one-half, on the part of other countries who share the U.S. interest in maintaining, and improving, weather-related space sensing systems. This alternative approach to working on a "space station" program with other countries is worthy of careful consideration by Congress. For no reasonable way of reducing the Federal debt burden by billions of dollars should be passed by unless Congress convinces itself that it is not in the Nation's interest to do **SO.**

2. Except, perhaps, for the smallest and poorest countries, all of the countries in the world must have at least some interest in space: the devices and people that orbit above them, the activities that go on there, and how they all could affect their own interests. But only about one-tenth of the world's countries play an active role in space today.

   Here is an extraordinary opportunity for the United States!

   Our determination to exhibit "space leadership" need not and probably should not be confined to dealing with the richest and/or most technologically advanced countries. We could broaden our approach to "international cooperation" by taking as an explicit goal the incorporation of the space interests and activities of any other country in the world into our program, if that country would be at all inclined to participate in space ventures along with us, Of course, such an initiative would require hard work, patience, imagination, and generosity on the part of the United States. But these characteristics are not usually in short supply in the United States generally, and certainly not among the professionals in NASA and the Department of State. Indeed, it was the combination of just these national characteristics in the U.S. approach to working with a few countries in the past that enabled them to begin to work in space.

   Recall that INTELSAT now has over 100 member countries, joined in a common interest to see space used to improve communications. The United States could now begin to use any in-space infrastructure program to start orchestrating the interests of all of the countries in the world that would be willing to work with us in reasonable ways to see space developed and used for any and all peacefu l purposes "for the benefit of all man kind."

Space as an Arena of Peaceful Cooperation

Even now, when discourse between the United States and the Soviet Union is modest in the extreme, and the practical possibilities of effecting cooperative space-related activities between the superpowers are severely limited,[18] many cannot but hope that the two countries will find ways to initiate important cooperative civilian space endeavors in the future.

To date, most visions of such cooperation form around scientific activities. They are important, and they should continue to be given serious and thoughtful attention.

Together, the United States and the Soviet Union have some 600 million people and a gross national product of some $5 trillion between them, and both have global interests and power. Therefore, possible joint cooperative space activities need not be confined to science; indeed, a broad range of space-related activity

[18] U.S.-U.S.S.R. cooperation in space-related activities has not entirely vanished. The SARSAT search-and-rescue program, a joint U.S.-Canadian-French undertaking, continues to interoperate successfully with the parallel Soviet COSPAS system. Both the United States and the Soviet Union are members of INMARSAT, the maritime equivalent of INTELSAT, and both are cooperating, along with Europe and Japan, in the International Halley Watch program.

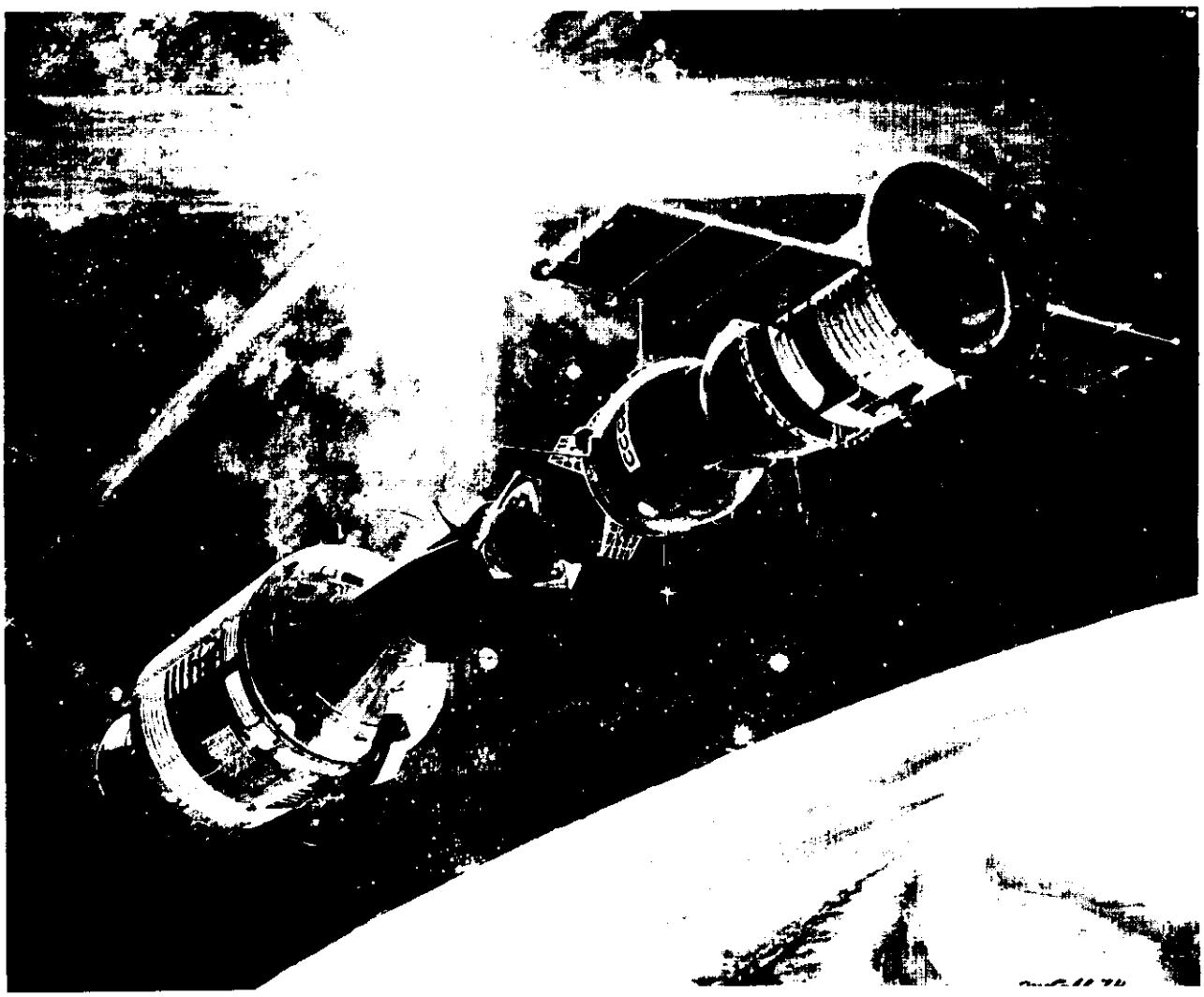

Photo credit: National Aeronaut/es and Space Administration

NASA has had agreements with more than 100 countries for cooperation in space activities. The pinnacle of international cooperation in space to date was the Apollo-Soyuz Test Project (ASTP), in 1975 (shown here), in which a U.S. Apollo spacecraft docked with a Soviet Soyuz spacecraft for several days of joint manned operations. However, no international cooperative agreement (including ASTP) has yet involved significant sharing of technology or saving of costs.

areas might well be explored, imaginatively and determinedly.

OTA plans to report on some of the issues in this area in the fall of 1984.

NASA'S Changing Role

Until a few years ago, and except for the satellite communications area, NASA has, since its inception, organized, staffed, and managed itself to see that it, and its contractors, did essentially all that was done in the civilian space area.

Throughout most of this time, and probably without conscious reflection on NASA's part, or the part of anyone else, it has simply been assumed that once our country decided that something was to be done in or for civilian space, NASA was to do it. That is, the responsibility for seeing that something got done in the civilian space area was equated with NASA's doing it itself.

But the changing circumstances of the past few years now clearly suggest a fundamental reappraisal of NASA's responsibilities and role in the development and further study, exploration, and use of space.

Although this study of civilian "space stations" and the U.S. "future in space" has brought these changing circumstances into clear, at times painfully clear, focus, it has not attempted to search out what NASA's new role should be in detail. It is to be noted, however, that the Nation's interests now are becoming much broader than those of NASA and, indeed, in some instances, may lead to conflicts with what NASA may perceive to be its own interests.

NASA could and, in OTA'S view, might well now give increased attention to making some fundamental shifts of attitude and operation. In the past, it has been NASA'S **responsibility to meet any given national space objective; in the future, it could be NASA's responsibility to see that the objective is met. That is, NASA could now aspire to the much broader role of encouraging others in the private sector and throughout the world to do much more of what it does today.**

If NASA is to rise successfully to the challenges now emerging in the national and international space arena, it must place relatively less emphasis on accomplishing by itself those things that our private sector or other friendly nations can satisfactorily do, either alone or with NASA assistance. it can succeed in this only by continuing to cooperate with both, and by broadening this cooperation so as to prompt and assist both to extend their space-related capacities, confidence, and commitment. And it could emphasize such cooperation in the acquisition of in-space infrastructure, i.e., a "space station. "

Released from its relatively near-term focus, NASA could concentrate more of its own professional activities on the most important and exciting of questions regarding space, the things that no one else can or will do: the very best of space-related science; the cutting edge of space-related technology development; the boldest of space-related explorations and developments.

Finally, NASA could see that its activities continue to be conducted, and the results continue to be used, not only to increase knowledge and to address important social and political goals, but also to enable our private space sector to increase its non-Government sales—the sales that generate the taxes that help to pay for NASA's activities.

Non-Government Policy Studies

It **is inherently difficult for the Government to make some kinds of policy studies and, indeed, it is potentially hazardous to have all such studies made by the Government in areas of important national concern.**

Particularly in areas where Federal programs take a long time to develop and carry out (say, a decade: cf. Apollo, Shuttle, Landsat, "space station") vested interests are naturally created within the Government and closely related sections of the private aerospace industry. Later these interests can present serious problems of resource re-allocation on the program's approaching completion unless new avenues for their employment have been carefully explored and publicly agreed on beforehand.

Our free, and increasingly educated, mobile, diverse, rich society is bound to generate ideas, desires, value judgments, and activities about which the Government simply has difficulty in keeping well informed, particularly if the ideas are quite different from those with which the Government has been dealing for some time and are generated and pursued by persons and organizations that are "new to the scene. "

Civilian space activities continue to be of importance to the United States in many intangible ways, and they are now beginning to be appreciated as offering tangible and growing private sector economic prospects as well. "Space commercialization" has become a popular topic. But in the absence of a "bottom line" and competitive economic forces, the Government has a more difficult time than does our private sector in sharply reducing unit costs. And Government offices only rarely, by themselves, originate

large innovative and challenging programs and carry them out to satisfactory completion.

In the area of the physical sciences, for instance, U.S. leaders can look to several policy study centers for independent guidance on issues of broad national concern, In the space area, however, there are only a few dedicated individuals who can provide similar guidance.

In view of the increasing importance of civilian space activities to the American public generally, it might well be desirable to establish one or more independent space policy centers whose professional staff would not be required to respond to the contemporary institutional concerns of the space community. Such centers would control their research agendas and allocate resources as they believed best, rather than simply responding to directives. An example of this type would be a university-based institute with several funding sources. The continuing study efforts of such centers could provide the American public a better opportunity to consider, and to help initiate, space activities that would address important cultural, economic, social, and political ends.

POSSIBLE LEGISLATIVE INITIATIVES

In the context of the circumstances and issues discussed in this assessment and the conclusions reached therein, Congress could now give consideration to taking a number of initiatives.

Some of these suggested initiatives are directly related to "the civilian space stations" area; others are related to broader areas that are of general importance to "our future in space. "

Strategies for Acquiring Any New In-Space Civilian Infrastructure

The response of Congress to the President's formal request for the commencement of a "space station" program should take account of the general circumstances discussed in this study and the existence of options beyond those proposed by NASA. Given these general circumstances and the variety of options, Congress could adopt one of four positions:

1. decide that it is premature and/or inadvisable to set out, soon, to obtain any large amount of new long-term in-space infrastructure, and refuse to accede to an executive branch request to do so a year or two hence; or
2. at least by implication simply agree, in principle, to provide the kind and number of in-space assets and services that NASA judges to be necessary and, accepting its $8 billion cost and 7 to 8-year schedule estimate as working numbers, be prepared to approve a year or two hence the acquisition of the general kind of infrastructure elements that NASA is now focusing on; or
3. specifically identify any major space services to be provided, ask NASA to present various estimates of costs, schedules, and procurement strategies that would be involved in providing them and, subsequently, select from these estimates the elements and strategies to be approved; or

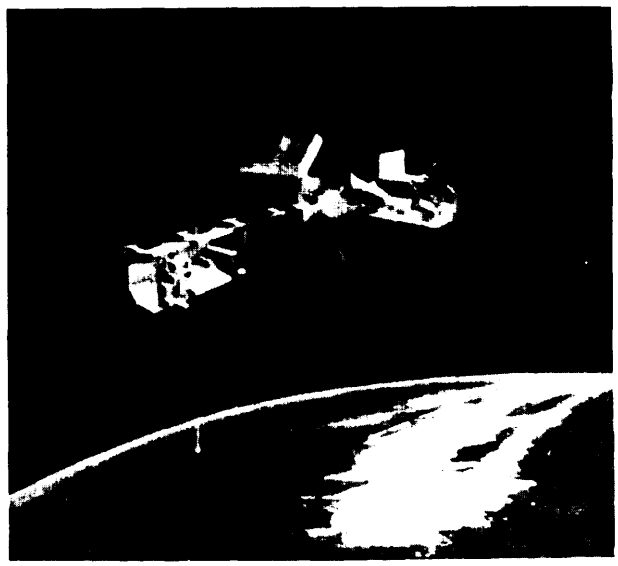

Photo credit: **National Aeronautics** *and Space Administration*

Free-flying platforms such as the one depicted in this artist's concept offer one option for relatively low-cost space infrastructure elements.

4. for the acquisition of any in-space infrastructure, simply approve an average annual expenditure rate for its acquisition and allow NASA to select the elements, acquisition schedules, and procurement strategies in the light of NASA's judgment regarding their relative cost and value.

Congress need not imagine that it is required to commit itself to accepting any of these positions at this time, inasmuch as the President's fiscal year 1985 request was restricted to the first year of a 2-year study activity that would cost a relatively modest amount (some 5 percent of the projected total acquisition cost) for such a major implied space activity. But there is a sufficiently persuasive case for our obtaining some additional space infrastructure so that thoughtful and comprehensive study of what it should be and how it should be obtained is now warranted. Therefore (setting aside the very important matter of our Federal budget's present and projected circumstances and the implications thereof for any deferrable "new starts") Congress could use the next year and a half to become better informed about the options available to it and the implications of selecting particular ones from among them. And it could task the executive branch to make additional, broader, studies than it now has in mind—studies that could assist Congress in arriving at its crucial judgments a year or so hence.

The House Committee on Science and Technology has taken an important step in the direction of raising such broader issues in requesting a study by NASA that will look into "space station" program management and procurement matters.[19] A report of this study, to be provided by NASA to the committee by December 15, 1984, is expected to speak to both " . . . [the] Space Station development management plan and procurement strategies with a description of the alternatives available and the basis for the [NASA] choices taken."

Similarly, Congress could request the executive branch to inform it regarding:[20]

- The priorities it places on the various services and assets that it sees as generally desirable. That is, if Congress were to allocate more or less than the $2 billion per year now being discussed for the acquisition of IOC elements of space infrastructure, what are the most important services to be made available and elements to be selected?
- The ways that are available to keep the U.S. public cost to a minimum, and the bases for the executive branch's pursuit or rejection of them. That is, there are two important opportunities for reducing the public cost of any space infrastructure, but it is not clear that NASA—with its institutional interest in retaining present personnel force and appropriation levels—has incentives to pursue either with sufficient imagination and vigor. These opportunities are:
  1, Other countries could collaborate closely with the United States so as to produce any agreed infrastructure in a fashion that would see their financial contributions reduce the demands on our public purse to well below the $8 billion figure, rather than simply producing additional, perhaps essentially duplicative, infrastructure elements at no savings to the United States.
  2. Our private sector could be encouraged to use its own resources to develop, produce, and install as much of any agreed infrastructure as would meet the Government's performance specifications at a cost lower than the Government's present procurement practices allow, rather than have Government funds used to purchase all of it and Government personnel used to manage the process in detail.
- Other important space initiatives that NASA could undertake. That is, if Congress were to decide that the acquisition of any infrastructure should proceed at an average annual public expenditure rate appreciably less than $2 billion per year, what other important programs could be mounted with the remaining professional staff and the difference in dollars?[21]

[19] See Committee report of Mar. 21, 1984.

[20] It should be noted that this assessment makes the assumption that NASA's overall funding level will remain relatively constant as it has in recent years.

[21] Ibid.

- Conceptual programs of cooperation with the Soviet Union in civilian space activities. That is, while a case can be made for mounting large and continuing, technologically challenging, U.S.-U.S.S.R. cooperative civilian space programs, essentially nothing of this nature is now being seriously considered because of the low state of political accommodation. In anticipation that today's tensions may abate someday, it is important that conceptual programs now be identified and described that would: 1) be of little inherent political sensitivity, 2) offer little prospect of significant technology transfer, 3) allow for important involvement of other space-experienced countries as well, and **4)** offer the promise of important cost savings to any country that, otherwise, would pursue any of them alone. The conduct of some such programs could well require some related elements of in-space infrastructure.

  These broader studies would be carried on at the same time, and for a small fraction of the cost of, the "space-station" engineering studies that NASA is now beginning to conduct, and the conclusions of their satisfactory completion would clearly be of importance to Congress 1 ½ years hence.

Civilian Space Policies, Goals, Objectives, and Strategies

Except for a few changes in the basic space law, Congress has been satisfied to deal with evolving circumstances through specific year-to-year changes in NASA's authorization bills. But these circumstances are now so greatly changed, and our space assets and experience are now so great, that it has become clear that Congress could reassess our civilian space laws' goals, objectives, institutions, policies, and plans with great profit.

For instance, Congress and the general public should not find themselves in the position of having to decide on large, complex, and very costly items of space infrastructure such as a "space station" without having a much clearer understanding of what these items will all be used for over the long term, and without being confident that their character, the uses to which they will be put, how they are to be acquired, owned, operated, and paid for, have all been carefully considered and conclusions reached that most would accept as reflecting our broadest national interests—not primarily the interests of the space community.

Congress is now moving to effect some important changes in space law and policy. Legislation has already been enacted in 1984 by Congress and accepted by the President that makes an important change in the Space Act.[22] The act now declares " . . . that [NASA should] seek and encourage, to the maximum extent possible, the fullest commercial use of space."

Although a sufficient, and sufficiently broad, base of thought, analysis, and discussion of fundamental considerations is not yet in hand to allow Congress to proceed to make other fundamental changes in our national civilian space posture with great confidence, the National Commission on Space authorized for in Title I I of this year's legislation,[23] and its subsequent activities, could go far toward calling widespread attention to our civilian space problems and opportunities. The Commission is expected to give the first broad consideration to our national space interests in a generation—consideration that would encompass interests in addition to those of science and technology that receive by far most of the attention today. It is the kind of consideration that would guard against our continuing to be caught up in either fascination with or the details of exotic space technology, and would focus instead on sensible and generally acceptable methods whereby we can proceed with the development of space, meet human needs in so doing, and fashion new ways of paying for it as we go. And it could identify new policies, goals, objectives, and strategies, and structural changes that, put in place, would increase the likelihood that the great promises of the next quarter-century of the space age would, in fact, be realized.

All of those within and without the Government who are truly and seriously interested in furthering our prospects in space should be prepared to assist this Commission.

---

[22] Public Law 98-361.
[23] Ibid.

The Creation of Space Policy Study Centers

The number of professionals engaged in space policy analysis is extremely small. The President's science advisor spoke to this lack of independent expertise in testifying before a House subcommittee in February 1984.

And in March the House Committee on Science and Technology[24] spoke to " . . . the changing character of national and international space activity [that] translates into issues and policy considerations of increasing breadth and complexity, " and went on to say that "[d]uring the next year the Committee intends to look in greater depth at the elements and character of the current institutional apparatus for setting space policy [and] examining the process by which decisions and policies are reached on civil space issues. "

In these circumstances, Congress could consider prompting the establishment of one or more modestly sized, policy-related, study centers outside of the Government. Provided with sufficiently broad charters, and funded in such a fashion as to assure both independence in, and long-term support of, truly challenging studies, professionals would be attracted to conduct the kinds of broad inquiry and analysis that the civilian space area now so badly needs.

[24] See Committee report Of Mar. 21, 1984.

Chapter 3

SPACE INFRASTRUCTURE

Contents

	Page
Summary	49
Introduction	49
Considerations For Any Space Infrastructure	50
Orbits	50
Low-Earth-Orbit Environment	51
Technical Considerations	52
Space Transportation	54
NASA's Approach to Space Infrastructure	58
"Mission Analysis Studies" Summary	58
Infrastructure Functions	60
Reactions of National Research Council Boards	61
Alternative Infrastructure	62
Uninhabitable Platforms	62
Habitable Infrastructure	70
Extended Duration Orbiter (EDO)	70
Spacelab	72
Shuttle as Permanent Infrastructure	77
Shuttle External Tank (ET)	77

LIST OF FIGURES

Figure No.		Page
1.	Orbital Inclinations and Representative Uses	50
2.	Diagram of Shuttle Mission Profile	55
3.	A Possible Configuration for NASA's Initial Operational Capability . . . Space Station Involving a Solar Power Array, Habitat Module, Logistics Module, Two Laboratory Modules, and Satellite Servicing Structure	57
4.	An Artist's Conception of a LEASECRAFT Enroute to Orbital Altitude With Payload Attached	63
5.	A Free-Flying Permanent Industrial Space Facility	67
6.	Major Spacelab Elements	73
7,	Shuttle-Spacelab Flight Profile	74
8.	An Artist's Conception of a Free-Flying Pressurized Module with an Attached Resource Module (second phase of Columbus concept)	76
9.	External Tank Structure	80
10.	Possible Uses of External Tank	81
11.	Concept of Infrastructure Utilizing Four External Tanks	82

Chapter 3

SPACE INFRASTRUCTURE

SUMMARY

Since 1957 various spacefaring nations have launched hundreds of spacecraft, many of which remain today in Earth orbit or on itineraries within the solar system or beyond. Many of these spacecraft, and some of those to be launched in the future including any "space station" elements and associated launch and transportation systems, are elements of space infrastructure, enabling humans at the surface and in space to carry out activities outside of Earth's atmosphere. This chapter begins with a discussion of the space environment, orbits, and the technical aspects of space infrastructure. NASA's specific aspirations for a "space station" and the functions that NASA expects it to provide are listed in detail. The projected uses of such a facility are summarized, taken from the response of a number of major aerospace contractors to NASA's Mission Analysis Studies. The reaction of the National Research Council's Space Science Board and the Space Applications Board to NASA's "space station" aspirations are then discussed. The remainder of chapter 3 lists and describes alternatives to NASA's aspirations for space infrastructure, including a number of currently existing platforms and other infrastructure elements, and some that are under development or in the planning stage. [1] A "USA Salyut" concept is presented as an option that could provide in-space infrastructure that is roughly comparable to the Soviet Union's current Salyut 7.

[1]Among the sources for the material presented in this chapter are background reports prepared for OTA by Dr. Jerry Grey, aerospace consultant (on space systems and transportation) and by Teledyne-Brown Engineering on alternatives to wholly new technology in-space infrastructure. Additional material on existing or proposed space platforms and spacecraft was furnished by individual aerospace companies. Also available were results of an OTA workshop on lower cost alternatives to a space station; workshop participants included aerospace industry and international representatives.

INTRODUCTION

The United States is currently pursuing a wide variety of civilian space activities. The argument is being forcefully advanced that additional in-space infrastructure would permit scientific, technology-development and commercial activities to be performed more easily or economically than at present, and might allow new types of activities in space. Plans for a civilian "space station, " i.e., space infrastructure, were included in the ambitious U.S. publicly supported space effort which commenced immediately after the launch of the first Sputnik over a quarter century ago. NASA undertook preliminary designs for such "space stations" in the early sixties.[2] In the early seventies, astronauts were successfully supported for *long* durations aboard Skylab, the first U.S. space laboratory. Now, at the beginning of the second-quarter century of the space age, U.S. space infrastructure that would support long-duration human activities in space is again under consideration.

[2]The first realistic design initiative for a space station appears to have been taken prior to the NASA efforts by the Lockheed Corp. Missiles and Space Division in the late 1950s (S. B. Kramer and R. A. Byers, "Assembly of a Multi-Manned Satellite, " LMSD Report No. 48347, December 1958).

CONSIDERATIONS FOR ANY SPACE INFRASTRUCTURE

The space environment is quite different from that on and near the Earth's surface. There are a number of orbital, environmental, and technical factors that must be considered to ensure safe and successful operations in space.

Orbits

Infrastructure elements could be located in one, or several, of a wide range of orbits. Most communications satellites and some meteorological and Earth observation satellites utilize locations in geostationary orbits, 35,800 km above the Equator, as fixed vantage points from which to transmit and receive signals or to observe the Earth's surface and its atmosphere. It has been frequently suggested that on-orbit servicing of geostationary satellites, their orbital transfer propulsion systems, and inter-orbit transportation vehicles, could be done more efficiently from infrastructure located in low-Earth-orbit (LEO) with a low inclination relative to the Equator. An orbital inclination of 28.5° (see fig. 1) would be reasonable for this infrastructure, because launches over the Atlantic Ocean from Cape Canaveral into orbits of this inclination consume the least energy.

These two functions–servicing geostationary satellites and launching into the lowest energy orbit from Cape Canaveral—are reasonably compatible, because the additional energy needed per unit mass at great altitudes to transfer a payload into geostationary orbit from 28.5° is relatively small.

However, full repetitive coverage of the Earth for low-altitude meteorological and other Earth-viewing satellites requires near-polar orbits (such as the near-900 inclination illustrated in fig. 1). Such satellites are therefore launched from the Vandenberg Air Force Base in California, which offers a safe launch trajectory to the south, over the Pacific Ocean. A Sun-synchronous near-polar orbit that follows the dawn-dusk line is possible; it avoids Earth shadowing of solar-powered or solar-viewing instruments, but does not accommodate Earth-viewing instruments that require illumination of the Earth's surface by the Sun.

Figure 1.—Orbital Inclinations and Representative Uses

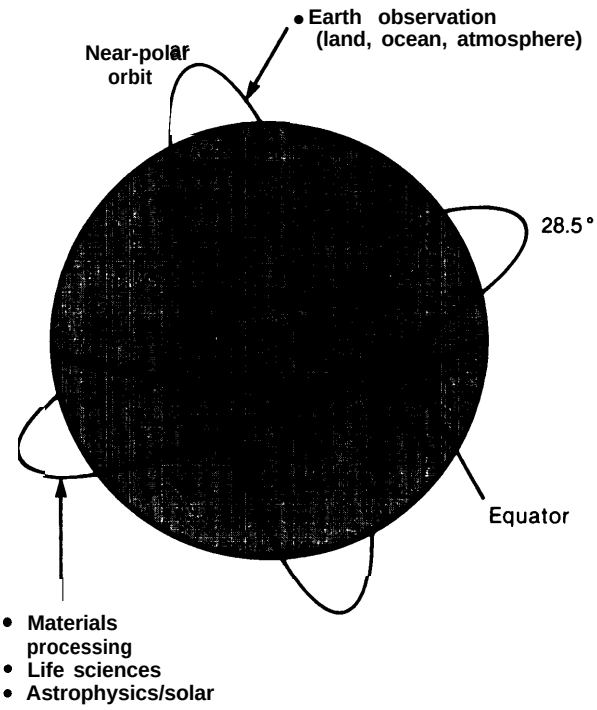

When repetitive but not full coverage of the Earth is essential, a lower inclination can be used; an orbit inclination of **57**° is favored because it is the maximum practical inclination obtainable with a Cape Canaveral launch. It may be desirable to use infrastructure elements in several orbital planes, or perhaps to develop and employ a reusable orbital transfer vehicle (ROTV) for transportation between orbits having various inclinations, although this would be expensive.

Orbital altitudes are also related to several physical characteristics of space. One of these is the "solar wind," a radiation flux of high-energy particles from the Sun, that can present a threat to human beings and equipment. However, the region from 200 to 600 km in altitude (LEO) is shielded by the Earth's magnetosphere and the radiation there is almost negligible compared with the radiation in and beyond the Van Allen belts, which extend to 50,000 km in altitude. The magnetic field is less effective in shielding against ra-

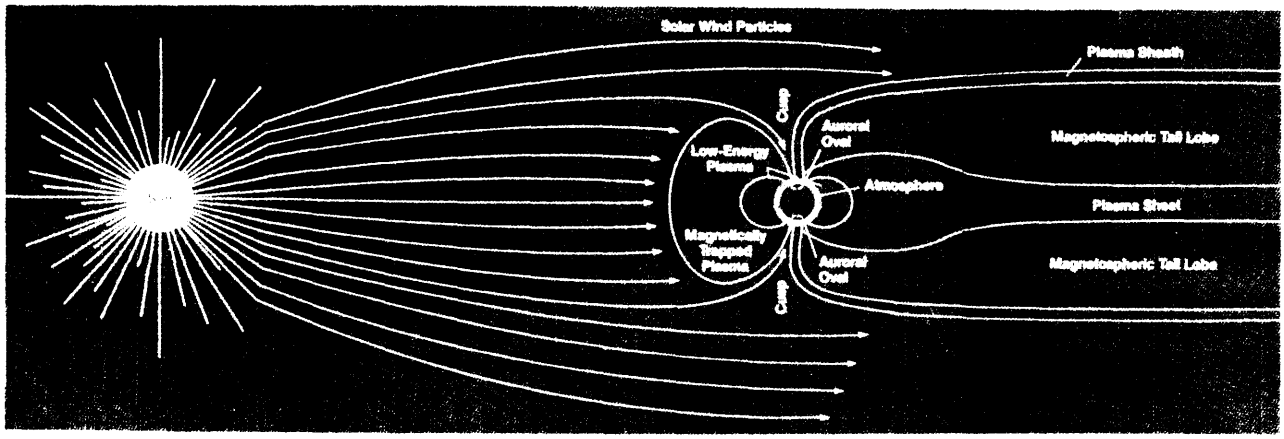

Photo credit: ***National*** *Aeronautics and Space Administration*

Diagram showing Earth's magnetosphere and other near-Earth phenomena.

diation approaching the Earth near its magnetic poles, including that associated with solar flares. Thus, high-altitude orbits and near-polar orbits are much less hospitable than low-Earth-orbits of low inclination.

Orbit altitude also affects the amount of global Earth coverage available to viewing instruments. If a sensor is required to provide daily global coverage, for example, the physical limitations on the angular swath width impose a minimum satellite altitude much higher than 500 km.

Aerodynamic drag becomes an important consideration for lower altitude orbits. Aerodynamic drag decreases for higher orbits; at 400 km, the drag is two orders of magnitude less than at 200 km. The minimum economical, long-term altitude for large semipermanent infrastructure elements that would be serviced using the Shuttle ordinarily would be above 300 km, and it will likely be below 600 km because of the rapid decrease in Shuttle payload capacity with greater altitude.

Since locations in LEO are above most of the atmosphere, astronomical observations of all sorts are favored there. As well, one revolution around the Earth in a typical circular LEO takes 90 minutes, allowing vast areas of Earth's surface to be observed in continuous succession and on a frequently repeated basis. However, higher orbits provide a broader field of view for remote sensing of Earth.

Another consideration is the energy that must be expended to take material to a sufficient altitude to obtain a relatively low drag, long-life orbit. To reach LEO requires more than half of the energy required either to reach geostationary orbit or to escape the Earth's gravitational field altogether. This is the physical basis for some of the projected cost savings of a permanently orbiting infrastructure base: large launch costs would be paid only once when infrastructure components are carried into orbit and left there, avoiding additional, repetitive, launch costs for heavy equipment that would be frequently used in space. Of course, resupply launches would still be needed and would offset some of this cost saving.[3]

Low-Earth-Orbit Environment

Four characteristics of the LEO physical environment are of particular interest: microgravity, high vacuum, periodic high-intensity sunlight, and the combination of solar exposure and shadowing that makes thermal control possible. For any infrastructure elements located beyond the Van Allen belts, a fifth environmental parameter is high-energy radiation,

[3]**The number of resupply launches required would depend on the types and levels of activities carried out, the presence or absense of people, etc.**

Above the minimum practical orbital altitude of a permanent space facility, the presence of microgravity and vacuum are essentially independent of orbital inclination and altitude. In particular, the exploitation of microgravity or near "weightlessness, " which occurs when gravitational and orbital acceleration counteract one another, shows promise for the processing of materials under such unique conditions. Energy generation depends on radiation from the Sun, and thermal control depends on radiating waste heat out into deep space. For most orbits, the Sun is eclipsed nearly half of the time by the Earth, but this effect can be tolerated if energy storage systems are used; batteries charged from solar photovoltaic arrays can be used to supply electric power during times that sunlight is blocked by the Earth.

Of course, for many human beings, simply being in orbit, and being able to view the Earth and heavens from this perspective, are the outstanding characteristics of space.

Technical Considerations

The design of infrastructure components and systems will depend heavily on a number of technical considerations. While a considerable amount of workable "space station" technology exists, as demonstrated by the success of Skylab, SPAS, MESA, and the Shuttle itself, the development of new technology may be desirable to obtain a long, and particularly useful and efficient lifetime for space infrastructure.

Data Management.– Space infrastructure elements would use an extensive data handling network both on-board and on the ground. The network would serve orbiting elements including the Shuttle, communication, navigation and remote sensing satellites, orbital transfer vehicles, crew members on spacewalks, tended free flyers, and support staff and scientific researchers on Earth. Cost, program control, and reliability prompt consideration of a wide variety of hardware and software technologies just now coming into being. For example, faster processors, laser disk storage, and flat display terminals will provide large increases in capacity at lower unit cost and weight.

Communications.—A number of communication links would be desirable using frequencies throughout the electromagnetic spectrum and encompassing a wide variety of distances, information content, and line-of-sight propagation directions. Space communications must be designed to avoid interference with established ground-based systems and to take privacy, cost, capacity, and reliability into account. Another consideration is the location of communications and data processing nodes. The various space infrastructure elements could require a large number of antennas and lenses (the Shuttle has 23) that, altogether, would cover a wide field of view. Phased-array antennas, whose radiation patterns can be "pointed" electronically rather than mechanically, could be widely used.

Systems for locating and tracking natural and manmade debris, loose tools, and approaching spacecraft is also necessary. System concepts for this purpose include radar with beacons or passive reflectors, radio transponders, interferometry, the Global Positioning System, ground-based radar, or lidar (laser radar),

Although space communications can rely initially on current technology, millimeter and optical wavelengths may be desirable for use in space. The development of systems in these parts of the spectrum would offer significant technological challenge.

Electromagnetic Interference (EMl).–This is a significant problem that can occur in space, particularly when high-power microwave sources and sensitive detectors are involved. It is difficult to protect some electronic circuits from this "pick-up" problem. In some cases EM I could force the use of a constellation of individual platforms separated rather widely from each other rather than a single large structure.

Attitude Control and Stabilization .–Although space infrastructure elements do not have to contend with gravity, wind, earthquakes, precipitation, and other problems encountered on Earth, they must deal with quite different problems such as the absence of both a "firm footing" and the ''stiffening" influence of gravity. Of particular concern is the control and stabilization of large,

flexible, evolving, structural assemblies and modules. Elaborate control systems for each module (sensors, actuators, computers, , . .) that are coordinated by a single "supervisory" controller may have to be employed.

Power.–Solar photovoltaic power generators with nickel-cadmium battery storage are commonly used in space. Systems employing them today cost at least several thousands of dollars per watt and have useful lifetimes of 10 years or less in orbit. One alternative is a nuclear power reactor, perhaps of the type now being explored in the Space Power Advanced Reactor program, but development time and hazards to human beings (and perhaps cost) may well preclude the use of nuclear reactors for inhabited infrastructure in the near future.

Significant cost reduction in photovoltaic arrays has been achieved using optical focusing devices that concentrate sunlight on the photocells, but considerable effort would be needed to develop and demonstrate practical arrays of this type for use in space. Coupled with this technique could be the use of more efficient solar cells, such as gallium-arsenide, in place of silicon cells. Efforts to increase the lifetime and reduce the mass of batteries could also lead to cost reduction. One promising replacement for present nickel-cadmium devices is the nickel-hydrogen battery. Another, at an earlier stage of development, is the regenerative fuel cell/electrolysis method, in which a fuel cell produces electricity and water when in the Earth's shadow and splits water into hydrogen and oxygen when in sunlight.

Thermal Energy Management.–For infrastructure composed of connected modules, it may not be practical to use individual thermal control systems for each module. Although individual systems would offer maximum flexibility, such an approach would prevent heat thrown off from one module from being used by another, and each module's radiator, which is by far the biggest and most exposed component of the thermal system, would impose its own orientation and location constraints on the overall structure. Hence, a centralized, automated system may be needed both to minimize total mass and to optimize radiator orientation (i.e., edge to Sun). However, such a system would require both a large, massive single radiator and considerable transfer of energy among the various modules via a heat-transport medium. Therefore, the tradeoffs between centralized and modular thermal rejection systems need to be examined in detail. The centralized system might utilize a gimbaled radiator maintained in an edge-to-Sun orientation, not only maximizing heat dissipation and thereby requiring perhaps a 60-percent smaller area than a fixed radiator, but also minimizing solar-wind degradation of its thermal coating.

A conventional separate-tube radiator, similar to that used in the Shuttle, would be extremely complex and massive because of the need for redundant piping, valving, and other plumbing components. For a typical 100-kW heat rejection system, a Shuttle-type radiator would require almost 6,000 meters (almost 4 miles) of tubing in over 1,500 individual pumped fluid tubes, more than 50 fluid manifolds, and more than 75 isolation valves, fluid swivels or flexible line segments. Hence, a heat pipe radiator may be a better choice. Heat pipes transfer heat by boiling a fluid such as ammonia at one end of a sealed tube and condensing it at the other. The liquid is then returned to the hot end by capillary (surface-tension) forces in a specially designed wick which forms part of the tube. The heat pipe has no moving parts, and each pipe is self-contained. Single pipes have demonstrated heat rejection rates up to 2 kW; hence, as few as 50 could handle 100 kW of power in space, While the technology is relatively well known, considerable development is called for to evolve a practical, reliable, long-life, heat pipe radiator at this power level.

Another technological challenge would be an inter-module system that transfers thermal energy to a radiator. Shuttle-type pumped-loop systems using Freon 21 would consume large amounts of power (up to 5 kW for a 100-kW system), and would also require the development of large, costly, space-rated pumps and their attendant repair and maintenance. A two-phase heat transport system using the same principle as the heat pipe would consume only about one-tenth as much power. Hence, it may be worth the cost of its development.

38-798 0 - 84 - 5 : QL 3

The use of passive cryogenic coolers for electro-optical detectors will present a difficult technical challenge. Active cryogenic systems are probably not satisfactory for long-term operation. Passive coolers require exposure to dark space and an environment that is free from effluents that would condense on the cooler's cold patch.

Propulsion.— Infrastructure elements require propulsion systems for attitude control, orbit change, station-keeping, and acceleration control. Propulsion systems currently use storable liquid mono- and bi-propellant pressure-fed thrusters. Near-future plans include cryogenic oxygen/hydrogen propulsion systems. Longer term prospects are electromagnetic thrusters including ion rocket (ions can be accelerated to much higher exhaust velocities than those provided by chemical rockets) and mass drivers ("buckets" of heavy materials can be accelerated, very rapidly by electrical motors rather than by conventional chemical combustion).

A principal challenge will be the creation of a storage and transfer system for handling liquid fuels in space. Specific needs are leak-proof fluid couplings and leak-detection techniques, fluid-quantity gauges that operate with acceptable accuracy in microgravity where conventional liquid-level sensors are not suitable, reusable, low-mass, nontoxic, long-life insulation for cryogenic storage and transport, and the liquefaction and refrigeration systems needed for long-term cryogenic storage. Improvements in cryogenic refueling procedures now used on the surface for Shuttle operations would be necessary—preferably procedures that would use automation—to obviate the need for a large technical staff that would be very expensive to accommodate in space.

Life Support Systems.–Some of the materials necessary for the support of humans in space would be supplied from Earth, others would be recovered in orbit from metabolic byproducts. With the exception of food, recovery technology demonstrated since 1967 can provide for oxygen, carbon dioxide scrubbing, and water for both drinking and washing. Such a "partially closed" system accommodating an eight-person crew, each drinking about 3.5 kg of water and using about a liter of wash water per day, would have to be resupplied every 90 days and would have a 30-day contingency supply. Compared with the Shuttle system, which does not use recovery, almost 7,000 kg per resupply launch could be saved. If reclaimed water were also used for showers, and for washing utensils and clothes, thereby replacing "wet wipes," disposable clothes, and disposable food service utensils, another **5,000** kg could be saved for each launch. Therefore, the development cost of such a system could be offset by associated transportation savings of over $100 million per year.

Food supply technology will also require some development, including improvements in packaging, preservation, bulk storage, reconstitution, and on-board preparation. Proper sanitation to reduce the incidence of debilitating illness in the completely closed environment of a "space station" will require waste disposal, contamination containment, disease-prevention measures, and heakh-maintenance facilities unique to microgravity environments to be developed and used. Some of this technology has already been developed for the long-duration Skylab project, but improvements are needed. Particular attention should be given to the proper design of residential, exercise, and recreational facilities if people are to remain in orbit for periods of much longer than several weeks.

Space Transportation

Vehicles will be needed for transportation between Earth and LEO, between various LEO orbits, between LEO and higher, including geostationary, orbits, and beyond to the Moon and perhaps to other planets and some asteroids. In the near future, supply for a "space station" from Earth would rely primarily on the present Shuttle and possibly its derivatives. Local checkout and maintenance services requiring people working directly in space could be conducted by tethered or free-flying spacesuited astronauts, sometimes augmented by the existing manned maneuvering units (MMUs). Servicing of more distant spacecraft could be accomplished with a planned orbital maneuvering vehicle (OMV), possibly in combination with either the Shuttle or a planned space-based ROTV, or by an ROTV (or

the Shuttle) carrying an astronaut equipped with an MMU.

Launching spacecraft into higher orbits or on Earth-escape trajectories requires the use of an upper stage rocket, which could be automatic, teleoperated, or used with a crew, plus kick stages or planetary landing stages, depending on the project. ROTVS, either teleoperated or employing crews, could be used to service satellites in orbits of significantly different altitude and somewhat different inclination.

Shuttle.-The Shuttle (fig. 2) meets most of the current needs for transportation between the Earth's surface and **LEO** at any inclination. The Shuttle can deliver 30,000 kg to a 200-km (120-mile) orbit inclined at 28.5° to the Equator. Any increase in orbit altitude or change from this orbit inclination reduces the payload capacity. However, most payloads are volume-limited by the cargo bay's 18-meter length and 4.6-meter diameter rather than weight-limited. By the early 1990s, the earliest date considered practical for obtaining a "space station," NASA projects a total of some 24 to 30 Shuttle flights per year, and some 50 per year by the year 2000. The Shuttle's cargo bay could be used to carry infrastructure- elements nto orbit, and when there,

Figure 2.—Diagram of Shuttle Mission Profile

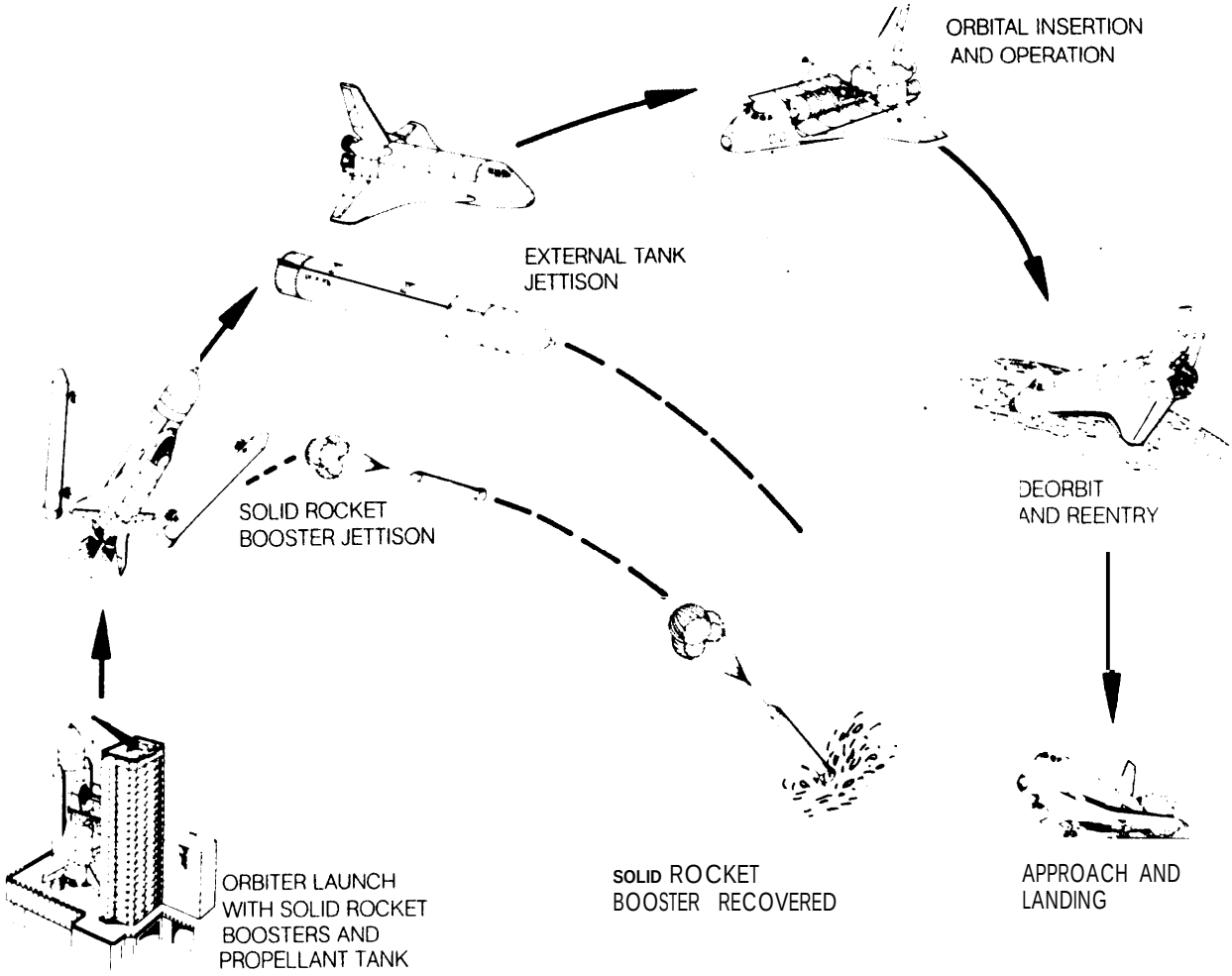

its crew of up to seven persons could be used to assist with any assembly and checkout. The Shuttle could also resupply expendable, ferry personnel, and serve for emergency rescue.

Manned Maneuvering Unit (MMU).–The MMU is a backpack equipped with a computer-operated propulsion system that permits an astronaut to "free fly, " thereby projecting his senses, his strength and dexterity, and his judgment beyond the confines of the Shuttle or other habitable infrastructure out to a few hundred meters. It is a general-purpose device that can be used for inspection, servicing and deployment or retrieval of equipment, for construction and assembly operations, for crew rescue, for emergency repairs, etc. A Shuttle-based MMU was successfully demonstrated on two flights in early 1984.

Orbital Maneuvering Vehicle (OMV).-Local transportation in LEO would be provided by the OMV. It would be operated remotely from the Shuttle, other space infrastructure, or possibly from Earth. It would be designed to have a six-degree of freedom propulsion system that would allow satellite or platform servicing operations at distances well beyond the MMU'S few-hundred-meter limit. One version of the OMV would be able to make altitude changes of 1,000 km or more above its initial LEO and orbit plane changes of up to 8°, depending on payload weight.

Basic OMV equipment includes propulsion units and propellent tanks; television cameras and lights for inspection and operator guidance; communications; control systems for remote operations; electric power; thermal control; and various manipulators and docking attachments. Current NASA plans are to have such a new-technology vehicle developed and operating in time to be useful in the deployment and assembly of a "space station."

Expendable Launch Vehicle (ELV)-Up to November 1982, all payloads launched into space were carried there by ELVS. There are now three basic U.S. families of ELVS: the Delta, Atlas-Centaur, and Titan **III.** The European Space Agency has its Ariane family of boosters, Japan has its N-2 (derived from the U.S. Delta) and is developing others, the People's Republic of China has launched a geostationary satellite using its FB-3 "Long March" rocket, and the Soviet Union is offering to make its Proton launcher commercially available. In addition, several private corporations in the United States and Germany have announced plans to develop ELVS. Many of these vehicles and possibly others may be available commercially throughout the next decade. However, it is not likely that they will be suitable for launching spacecraft that carry people, although they could launch supply spacecraft as the Soviet Proton boosts the Progress into orbit.

Expendable launch vehicles that can launch to high orbits, or to Earth-escape trajectories, use either their own upper stages or uniquely compatible orbital transfer vehicles (OTVS). The payload itself carries the "kick stage" or other propulsion needed to move from high, inclined, elliptical orbits to geostationary orbits.

Reusable Orbital Transfer Vehicle (ROTV).-A reusable, high-performance, liquid propellant "space tug" could provide transportation between LEO and geostationary and lunar orbits, or between Earth orbits of various inclination and altitude. Reusability and space-basing give promise of economic benefit for the use of an ROTV in launching and servicing communications and other satellites that utilize the geostationary orbit. An ROTV could be piloted by a crew or remotely operated.

Development of an "Advanced Space Engine" suitable to power an ROTV has yet to be started. Space-basing implies reusability, of course, as well as flexibility of thrust and duration of rocket burn, and the ability to refuel and perform maintenance in space. Thus, space-basing requires some form of orbital logistics system, including tanks, pumps, controls, and other equipment for refueling, people or teleoperator devices to check out the ROTV, refurbish it as needed, and reset its operating systems for each new trip, and perhaps crew quarters.

Space-basing also requires docking, servicing, and storage facilities in space to make ROTV operation possible. Moreover, as fuel for the ROTV must always be brought from the surface to LEO, alternative ways of transporting it are under consideration. More efficient delivery systems than the Shuttle, such as a Shuttle-derived tanker vehi-

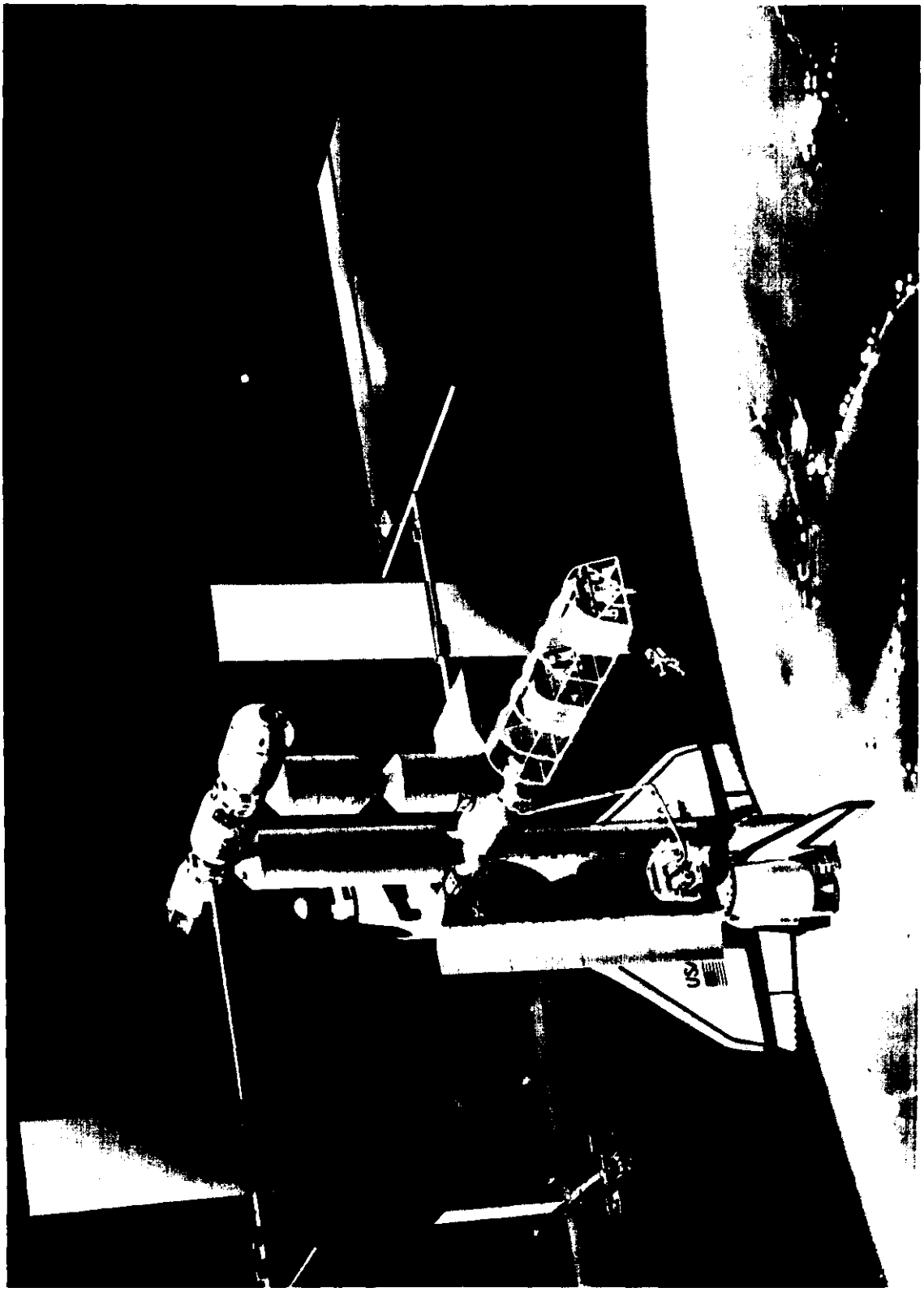

Figure 3.—A Possible Configuration for NASA's Initial Operational Capability Space Station Involving a Solar Power Array, Habitat Module, Logistics Module, Two Laboratory Modules, and Satellite Servicing Structure

cle, are being looked at. Scavenging left-over fuel from the Shuttle external tank is being given consideration. Considerable development time and expense would be involved in any of these efforts.

A prospect which offers an opportunity for considerable propellant savings is to dissipate the ROTV'S excess kinetic energy, on return from high altitudes to LEO, by allowing it to dip into the upper reaches of the Earth's atmosphere, a maneuver called "aerobraking." The return flight would consist of a brief de-orbit burn that would place the ROTV into an elliptical transfer orbit that intersects the top of the atmosphere. If the ROTV could dissipate enough energy to decrease its velocity by 2,400 meters per second, it would have just enough energy left to raise it to a "space station's" (typical) 300-km orbit. There, it could deliver its return payload (if any) and refuel for its next trip. This aerobraking concept promises a saving of over half of the propellant needed (compared to an all-propulsive ROTV) for a return trip with payload from geostationary Earth orbit.

NASA'S APPROACH TO SPACE INFRASTRUCTURE

"Mission Analysis Studies" Summary

In 1982, as part of NASA's planning to acquire long-term inhabited infrastructure, i.e., a civilian "space station, " the agency authorized "mission analysis studies" in the United States, and reached an agreement with foreign countries for parallel studies, of the desires or needs for, and characteristics of, such infrastructure. The results of these studies appear in appendix A.

The "mission analysis studies" started with the supposition that the United States would build a civilian "space station, " and did not require the potential user to address either justification of the basic "space station" concept or its funding. The studies were simply to identify uses that either would require or would materially benefit from the availability of a "space station" and to suggest some of its fundamental characteristics.

Of the several hundred potential activities in science, commercialization, and technology development identified by the U.S. companies (primarily aerospace) conducting the studies, the selection was narrowed by NASA to a set of about 100 time-phased missions for the first 10 years of "station" operation, 70 percent of which could be accomplished from a central base facility located in a 28,5° inclination in LEO. Free-flying platforms, either co-orbiting or in polar orbit, could accommodate most of the others.

The contractors viewed activities such as equipment servicing, research (especially in the life sciences and materials processing), and assembly and modification of large space systems as areas in which presence of a human crew would be particularly beneficial. They recommended architectural concepts involving several types of modules for the initial central complex: a command/habitability module with accommodations for a crew of four; an electrical power system providing about **25** kW to the users; logistics modules for periodic resupply; airlocks, docking ports, and pallets to enable mounting of equipment and laboratory modules. Subsequent development and growth of the facility over a 10-year period and incorporation of an ROTV and several free-flying platforms were anticipated.

Estimation of acquisition costs ranged from approximately $4 billion to $5 billion (1984$) for the initial facility, to about $12 billion for an evolved complex envisioned as being completed 6 to 8 years after the system first became operational. Other than the performance and social benefits of such a "space station," they estimated that economic benefits from servicing satellites in orbit, transfer of satellites to higher orbits by an ROTV, and human-tended long-term research activities would be considerable. The increased ability to launch planetary probes, establish a lunar settlement, and undertake human explora-

tion of Mars was considered of great significance in terms of long-range goals.

The foreign mission analysis studies paralleled those of the U.S. contractors and defined a similar set of space activities appropriate for infrastructure use. All participating agencies from Europe, Canada, and Japan expressed great interest in taking part both in providing elements of space infrastructure and in actively participating as partners in its use. Many of them look upon it as fundamental to their future role in space and therefore want long-term understandings and agreements with the United States on participation.

NASA assembled the United States and foreign mission analysis reports and held a workshop in May 1983 to synthesize the results. The workshop established a minimum time-phased "mission set" (for the initial decade of use) of 107 specific space activities, plus four generic commercial-industrial service activities (e. g., satellite servicing). Of the total set, 48 were categorized under science and applications, 28 under commercial, and 31 under technology-development.

In parallel with the contractor studies, NASA hired two consulting firms to communicate with a variety of non-aerospace companies to identify and encourage interest in the use of in-space facilities for commercial purposes. The consultants discussed prospects with approximately sO companies, and more than 30 expressed active interest in using a "space station" if it were available. Most of the companies moving toward agreements with NASA to become active in space are well-known U.S. industrial firms (one with an announced agreement is the 3M Co.), but several are from the small business sector or Europe. Interest is concentrated on the possible production of particular chemicals, metals, glass, communications, and crystals. Among the half dozen companies now actively investigating the possi-

80X D.-NASA's Current Aspirations

The workshop recommendations led NASA to draw up, during the summer of 1983, a "first cut," both of the initial operational capability (IOC) and of a possible later extension, of NASA's desires for in-space infrastructure as follows:

	IOC (early 1990s)	Future (by 2000)
Central complex in 28.5° LEO:		
Average electrical power to users	60 kW	160 kW
Laboratory modules (60 m³ volume each)	2	5
Attached payload mounts	4-6	8-10
Crew	6-8	12-18
Data rate	300 Mbps	300 Mbps
Satellite servicing capability	Nearby orbits	Range increased
Orbital maneuvering vehicle	Available	Available
Free-flying platforms (each with 15 kW average electrical power):		
Co-orbiting in the 28.5° LEO plane	One	Several
In LEO polar orbit	One	One
Crew	None	None
Space-based reusable orbital transfer vehicle	None	One

A conceptual configuration of the IOC is shown in fig. 3.

SOURCE: E. L. Tilton and E. B. Pritchard, "Overview of NASA Space Station Acitivites," presented to the 34th Congress of the International Astronautical Federation, Oct. 10, 1983, Budapest.

bility of sponsoring space experiments, most are more interested in crew-tended operations rather than automated procedures. Further details of the consulting firms' studies are discussed in the final section of appendix A.

Infrastructure Functions

The NASA planning process has depended heavily on the "Mission Analysis Studies" of U.S. and foreign aerospace contractors and foreign space agencies. From the views assembled therein, functions were identified for any space infrastructure ("space station") that could provide efficient and effective assets and services to support the projected space activities.

NASA's aspirations for a "space station" were most recently presented to the Senate Committee on Appropriations in March 1984. The infrastructure envisioned in their plans would provide the following:

1. an on-orbit laboratory supporting research on a wide range of life, materials, and other science topics, and the development of new technology (e.g., studies of biology, cosmic rays, processing methods for pharmaceuticals and semiconductors, testing of space materials, and advanced communications technology);
2. permanent observatories for astronomy and Earth remote sensing (e.g., a solar optical telescope to examine the surface of the Sun, a starlab to study the structure of galaxies, and lidar equipment to probe the atmosphere);
3. a facility for microgravity materials processing and manufacture of products (e.g., pharmaceuticals, semiconductors, glasses, and metals);
4. servicing of satellites and platforms (e.g., the maintenance or replacement of components, replenishment of consumables, and exchange of equipment);
5. a transportation hub to assemble, check out, and launch vehicles (e.g., those carrying communications satellites) to geostationary or other high orbits, and as automated interplanetary probes (e.g., a Mars orbiter or an asteroid rendezvous vehicle;
6. an assembly facility for large space structures (e.g., antennas for advanced satellite communications systems);
7. a storage depot for spare parts, fuel, and supplies for use as needed by satellites, platforms, vehicles, and people; and
8. a staging base for more ambitious future projects-and travel (e.g., a lunar settlement or a human voyage to Mars).

Questions such as the following must be asked relative to the corresponding functions listed above:

1. How much of an investment do these (and other) capabilities warrant?
2. Is use of a "space station" the optimum way to accomplish these missions?
3. When will the need for a microgravity production facility be demonstrated, and how much of its cost should its users pay for?
4. What kinds of satellites will be repaired, why, and who will bear the cost?
5. When will the transportation hub be ready and why is it needed then?
6. What is the purpose of the assembly facility for the large space structures–and of the large space structures themselves?
7. What is the justification for a storage depot in space?
8. When will a staging base be required for a lunar settlement or a manned Mars expedition?

And, underlying all of these specific questions is the hazard that too great a commitment to the acquisition of in-space infrastructure, and the resulting long-term operations and management expenditures, might preempt the adequate support of other important civilian space activities.

REACTIONS OF NATIONAL RESEARCH COUNCIL BOARDS

Other science and engineering organizations have participated in the study of space infrastructure acquisition. NASA invited the National Research Council (NRC) to review its possible utilization for space science and applications. (The NRC is a private organization of distinguished scientists and engineers operating within the charter of the National Academy of Sciences to act as an advisor to the U.S. Government (and others) on science and technology issues. It works through its committees, boards, and institutes, two of which, the Space Science Board (SSB) and the Space Applications Board (SAB), studied these issues in workshops during the summer of 1982.)

The Space Science Board concluded that almost all of the space science research projects forecast for the next 20 years (a forecast made without giving great attention to the possible use of sophisticated in-space infrastructure) could be carried out without the use of a "space station" as then characterized by NASA. These projects could be carried out by using Shuttle/Spacelab, satellites, interplanetary probes launched with expendable launch vehicles, or contemplated upper stages compatible with the Shuttle. The SSB stated it was not opposed to a "space station, " that a decision on it should be made for reasons beyond science uses, and that some science interests would make use of it if it were available. But the SSB expressed concern that any delays in launching science payloads that might be imposed as a consequence of waiting for completion of any "space station" could harm science programs unnecessarily, as the SSB believes happened during the development of the Shuttle (when several programs used up funds for employee salaries and other program costs during such delays),

The Space Applications Board expressed guarded support for use of a "space station ." It indicated interest in applications made possible, or made more efficient, through use of appropriate infrastructure, such as servicing of free-flying platforms, launching of geostationary satellites, repairing LEO satellites, and serving as a materials processing laboratory. Communications experimentation, especially for large antennas, was another likely use in their estimation. The presence of a human crew was deemed desirable, particularly for materials science experiments and for modification and repair of instruments. The SAB also concluded that a platform in near-polar orbit would be an important infrastructure component, to be used for Earth remote sensing of resources, Earth environmental studies, and ocean observations. The capability of the platform to merge and process a variety of data prior to transmission to the ground would be an advantage compared to independent, unprocessed transmissions from individual satellites. The SAB cautioned that sufficient resources must be made available to develop instruments and payloads for use on any "space station. "

Another body examining the role of expanded space infrastructure was the NASA Solar System Exploration Committee (SSEC). The SSEC is a group of the Nation's outstanding planetary scientists directly advising NASA on planetary research. The SSEC, which spent 2 years defining a new U.S. planetary space strategy, looked at the usefulness of any new infrastructure for planetary exploration. It concluded that, in the near term, the facility could be used beneficially as an assembly and launch base for deep space probes with potentially important advantages for planetary spacecraft requiring large internal propulsion systems. In the longer term, this could greatly facilitate the return of samples from Mars by providing a fully loaded booster such as a Centaur rocket. A "space station" could also serve as a holding facility for returned samples to alleviate concerns of their possible contamination of the Earth.

In January 1984, NASA created a 15-member advisory panel of academic space scientists that, over a 2-year interval, is expected to give NASA advice on suitable research projects for long-term, habitable, space infrastructure.

Of related interest to NASA programs, the NRC's Aeronautics and Space Engineering Board (ASEB) conducted a workshop during 1983 on NASA's

Space Research and Technology Program. While not directly addressing "space station" issues, their report noted the high payoff uses of space in the communications and meteorology fields, the present speculative nature of manufacturing in space, the high cost of space transportation and systems as an inhibiting factor in the commercial use of space, and that, in the face of foreign competition, the United States should continue to explore and stimulate potential uses of space.

The ASEB urged NASA to provide access to space for experimental purposes as a natural extension of national aerospace facilities on the Earth's surface. Overall, the report recommended that NASA devote a significant portion of its efforts to develop technology that would reduce the cost of spacecraft subsystems, payloads, transportation, and operations.

ALTERNATIVE INFRASTRUCTURE

Because of the large public costs associated with the NASA plans for acquiring in-space infrastructure, and considering the view of the Space Science Board (and others) regarding the NASA plans, it is important to explore alternative approaches for providing the desired capabilities of such infrastructure. OTA has identified several alternatives that could provide various capabilities, at various times, and at various initial costs to the Government. These alternatives include system components that currently exist or are currently under development. OTA has also considered a gradual approach to infrastructure acquisition with various average annual funding rates; lower cost alternatives could be used as early steps in an evolutionary development leading to increasingly sophisticated and capable arrays of infrastructure. Each of these approaches has different implications for initial Government cost, life-cycle costs, pace of commercial development, and the pace for carrying out human activities in space.

Uninhabitable Platforms

Regardless of the outcome of the debate over the need for infrastructure that includes and/or supports a long-term human presence in space, there is a significant community of users who would benefit from having uninhabited space facilities and services available to them. A number of so-called free-flying automated platform alternatives now exist, are in development, or have been conceived, that could take advantage of the Shuttle or expendable vehicles for launch and service.

The Shuttle can be used to launch to, and return equipment or other materials from, LEO. This ability allows for the use of space platforms offering electric power, heat rejection, communications, attitude control, and other services to a number of users. Some time after insertion into orbit (typically several months to a year), the Shuttle or an ROTV would rendezvous with such a platform, and servicing intervals for platform-mounted instruments would be coordinated with the rendezvous schedule, keeping costs in mind. Payloads could be exchanged, attitude control, fuel and other expendable replenished, batteries charged, or the platforms could be returned to an LEO base or to Earth. Platforms could avoid contamination and stability problems associated with inhabited infrastructure. The cost of the common platform facilities could be amortized over a long lifetime and a large number of activities.

Fairchild LEASECRAFT.-The Fairchild LEASECRAFT (fig. 4) is designed to support equipment that can be exchanged on orbit. This design approach anticipates that the costs (special equipment, crew training, etc.) and risks associated with performing maintenance and payload modifications and substitutions on orbit are outweighed by the saving in transportation cost and improvement in spacecraft utilization, which avoids frequent launch and return of the platform.

Figure 4.—An Artist's Conception of a LEASECRAFT Enroute to Orbital Altitude With Payload Attached

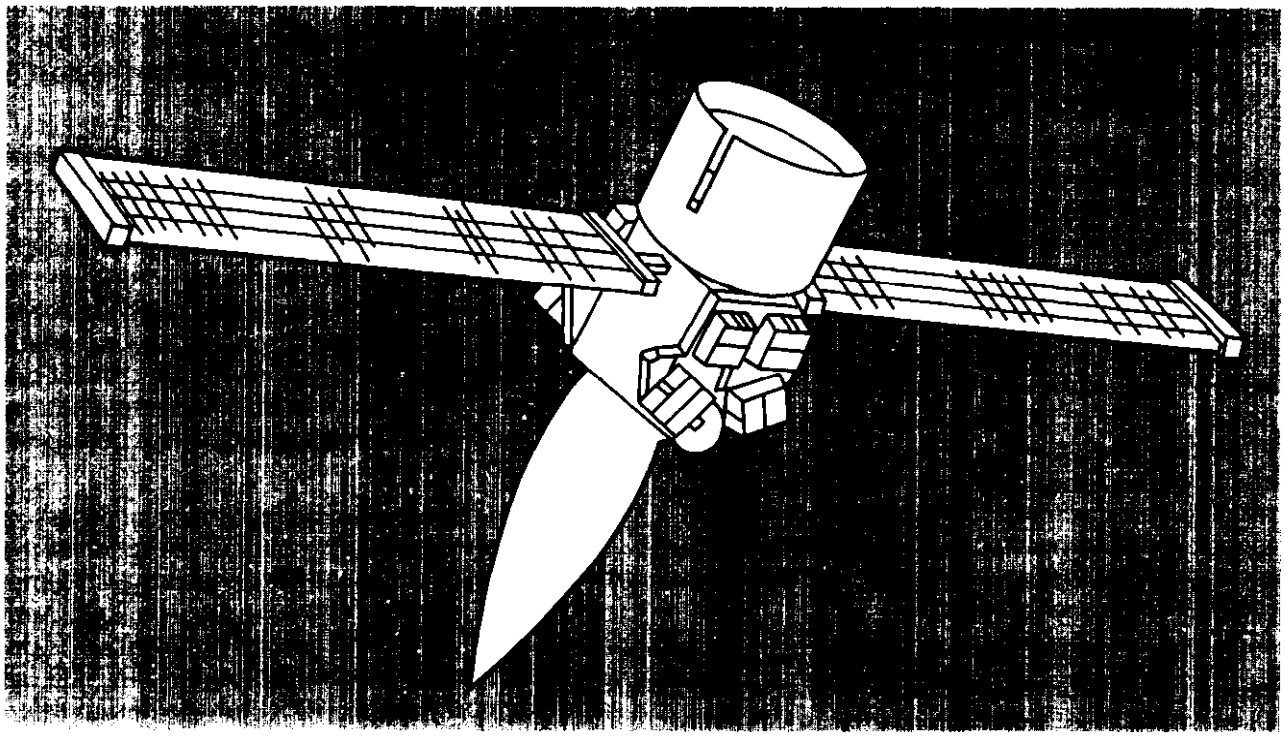

LEASECRAFT was inspired by the Multimission Modular Spacecraft (MMS) system on which the Landsat D and Solar Maximum Mission spacecraft are based. It can provide up to 6 kW of power and other services to user payloads, and is intended to serve LEO space projects that include data acquisition/transmission and materials processing.

Data acquisition activities generally require fine pointing and high data rates but relatively modest power levels. Materials processing projects, on the other hand, require high power but low data rates and relatively coarse pointing. The LEASECRAFT could be converted from one configuration to the other on orbit from the Shuttle or from other inhabited infrastructure.

The LEASECRAFT design includes a centrally mounted propulsion module that contains 2,700 kg of hydrazine for transfer from the standard Shuttle orbit of about 300 km to an operating altitude of 480 km. Later it can be returned to the Shuttle orbit for rendezvous. The total weight of the LEASECRAFT bus is expected to be 6,400 kg (including the initial charge of propellant).

The power and other services provided by the LEASECRAFT are dependent on the number and type of its modules. Details of how module and payload changes will be handled will depend on lessons learned from the Solar Max repair. Possibilities include the manipulation of tools by the Remote Manipulator System (RMS), spacewalking outside the Shuttle cargo bay by payload specialists, and retrieval of the LEASECRAFT by the RMS to a position in the cargo bay where payload specialists would perform the work needed.

An automated electrophoresis payload being developed by McDonnell Douglas is frequently mentioned in conjunction with the LEASECRAFT. It will consist of an electrophoretic processing fa-

cility and a separate supply module having a combined weight of some 10,000 kg. The processing unit will use 3.5 kW of power and will require an acceleration environment of less than 0.1 percent of gravity on Earth.

Another prospective payload for the LEASECRAFT system is NASA's Advanced X-Ray Astronomy Facility (AXAF). AXAF is a 9,000-kg telescope that will operate in a 500-km orbit, require 1.2 kW of power, and periodic change of imaging and spectrographic instruments.

The LEASECRAFT's ability to accommodate specific payloads is very similar to that of the high power version of EURECA (see below), with one important exception: the higher data handling ability of LEASECRAFT would allow it to accommodate most science and applications instruments. It would not accommodate some instrument projects that are very large, or those that require human involvement.

The initial LEASECRAFT reportedly will cost at least $150 million (1984$) apiece to purchase. Users may also purchase partial services of LEASECRAFT or lease an entire platform from Fairchild for $20 million to $40 million (1984$) per year. Transportation costs will include initial launch of the LEASECRAFT and its payload and other payloads that, subsequently, are taken to it for exchange.

Boeing MESA.–The Modular Experimental Platform for Science and Applications (MESA) is a low-cost satellite system designed by Boeing for launch on the Ariane. The MESA design follows from Boeing small spacecraft designs and production of the last decade. This includes three spacecraft known as S-3 for the Department of Defense, two Applications Explorer Modules (AEMs) for NASA, and the Viking Spacecraft being produced today for the Swedish Space Corp.

The MESA program utilizes existing hardware and previous experience to achieve a low-cost platform for modest payloads that do not require recovery, and for special cases that do require recovery.

An interesting feature of the MESA system in its Viking configuration is that it duplicates the Ariane structural interface on its top side, which enables it to share a launch by fitting between the Ariane and the primary payload. This use of residual launch capacity can reduce the cost of transportation to orbit.

The total mass of the MESA/Viking platform is some 500 kg. The design of the platform provides for attitude control and propulsion. Once the Viking separates from the main satellite after launch, the propulsion unit can boost the Viking into its operational orbit. The spacecraft is spin stabilized at 3 rpm, and Earth/Sun sensors and magnetic torquers are elements of the attitude control system. A combination of solar arrays and a battery provide 60 W of average power with a peak power of 120 W.

Limited changes can be made in solar array size and power output. The overall diameter of the MESA with payload cannot exceed the 2.95-meter internal diameter of the Ariane's payload compartment. The central core of the platform is designed to accommodate both platform (420 kg) and payload weights (0o kg for the design reference) and up to nearly 2,ooo kg of host satellite weight during Ariane launch. The available volume for the payload is 1.6 cubic meters (m J). Should the solid-propellant rocket motor not be required, an additional internal volume of approximately 0.6 m^3 would be available for payload use.

MESA is limited in its applicability because of its small size, limited resources, the use of spin stabilization, and the intention to have the payload integrated within the structure. This makes it best suited to small, scanning or nonviewing, dedicated activities. While suited for some space plasma physics or cosmic ray investigations, the spin stabilization is not appropriate for microgravity activities. MESA will accommodate only a small fraction of the science and applications projects identified in NASA's Mission Analysis Studies.

MESA is reported to cost $10 million (1984$). Transportation charges on the Ariane are uncertain since it can share a launch with another payload. If it is carried in the Shuttle, it should qualify for the minimum charge of $12.5 million (1984$).



Photo credit " Boeing Aerospace Corp

The Boeing MESA spacecraft undergoing ground processing.

Shuttle Payload Support Structure (SPSS).–An example of a structure supporting payloads that remain attached within the Shuttle cargo bay is the SPSS that has been developed for NASA. Teledyne Brown expects to commercialize SPSS during 1985. It will provide a mount, electrical power, data handling, and environmental control for payloads weighing up to 1,400 kg.

Long Duration Exposure Facility (LDEF).–A platform housing 57 experiments, many of them seeking to record how manmade materials hold up in the LEO environment, was released from the Shuttle in April 1984. The 10,000 kg-satellite, called the Long Duration Exposure Facility (LDEF), will be retrieved by the Shuttle in 1985. The LDEF, basically a free-flying support structure for scientific experiments, cost $14 million (1 984$), not including launch and retrieval.

Pleiades Concept.–A concept to expand the use of platforms for space science research has been proposed by students in a 1983 systems engineering course at Stanford University. In this concept (called "pleiades"), a platform located in the Shuttle cargo bay would provide data processing and other support for several co-orbiting free flyers equipped for long-term astrophysics research. Periodic servicing would be feasible from the Shuttle. If developed, it might become a permanent space infrastructure element.

Space Industries' Platform.-A free-flying permanent industrial space facility (lSF), designed primarily for materials processing, has been proposed by a new commercial space company, Space Industries, Inc. (fig. 5). An automated platform suited for production purposes, it could be placed in LEO by the Shuttle and serviced several times a year by it and/or any eventual long-term space infrastructure. The ISF would include a pressurized volume where equipment could be serviced by a crew during resupply periods; the facility, however, would provide no life support functions when occupied other than a suitable atmosphere compatible with the Shuttle or ROTV, to which it is expected to be attached during these periods.

Assuming successful financing, the facility could be placed in operation in the late 1980s. No cost figures have been made public, but some industry sources estimate that it would cost some hundreds of millions of dollars to develop and construct.

MBB SPAS.–The concept of a Shuttle-tended platform was tested, to a limited degree, with the Space Pallet Satellite (SPAS) payloads during two Shuttle flights. SPAS was developed at the initiative of the German company Messerschmitt-Bolkow-Blohm (MBB). Its structure is constructed out of graphite epoxy tubes to form a modular truss bridge that spans the Shuttle cargo bay in width and fits that length dimension for which a minimum launch charge is made by NASA. The structure provides mounting points for subsystem and experiment hardware and includes a grapple fixture for handling by the Remote Manipulator System, i.e., the Shuttle arm. The SPAS is designed to operate in either a Shuttle-attached mode or as a free-flying platform, and it was released during the seventh Shuttle flight to operate in the latter mode for about 10 hours before retrieval. In that operation it provided the first opportunity to demonstrate the Shuttle's ability both to deploy and retrieve a satellite. The SPAS payload remained in the cargo bay during the 10th Shuttle flight, where it successfully handled equipment for several commercial users.

Having only battery power and compressed gas thrusters, the initial SPAS is designed for short-lifetime projects (7 to 15 days), but subsequent versions could undoubtedly extend the lifetime by incorporating solar photovoltaic arrays and propellant-type thrusters, and maybe even a kick motor to achieve a wider range of orbits and/or to be able to return to a Shuttle-compatible orbit for rendezvous. In its present form, SPAS will only accommodate relatively small, low-power instruments used for short periods of time.

The basic SPAS platforms costs less than $1 million (1984$); subsystem equipment required by specific payloads is not included. SPAS is designed to qualify for the minimum Shuttle launch charge of $12.5 million (1984$) but, with a large payload, it may exceed this qualification.

EURECA.–The European Space Agency (ESA) is developing a small unmanned platform carrier that would be released from the Shuttle and retrieved after free flights in space of 6 to 9 months.

Figure 5.—A Free-Flying Permanent Industrial Space Facility

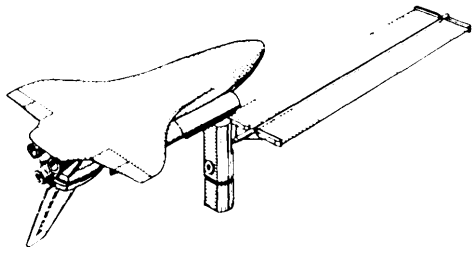

Initial Operating Configuration

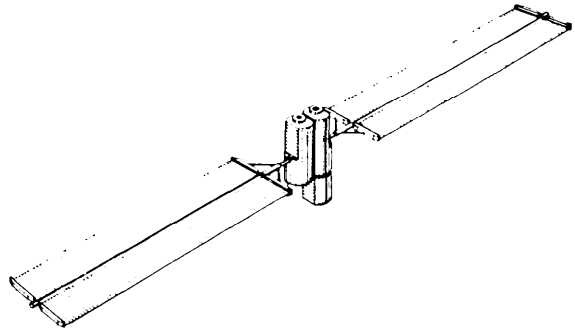

Two ISF Module Configuration

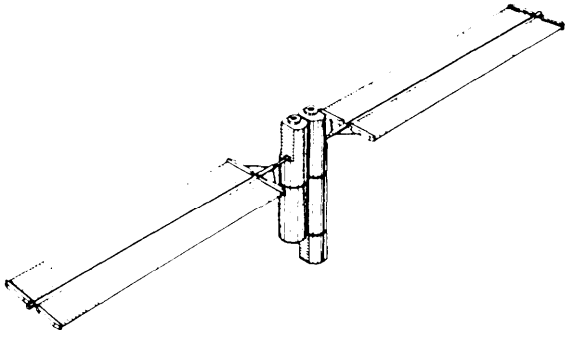

Four ISF Module Configuration

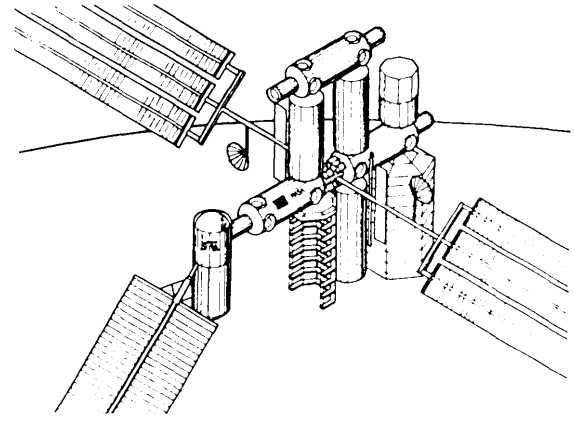

ISF Docked to NASA'' Space Station'

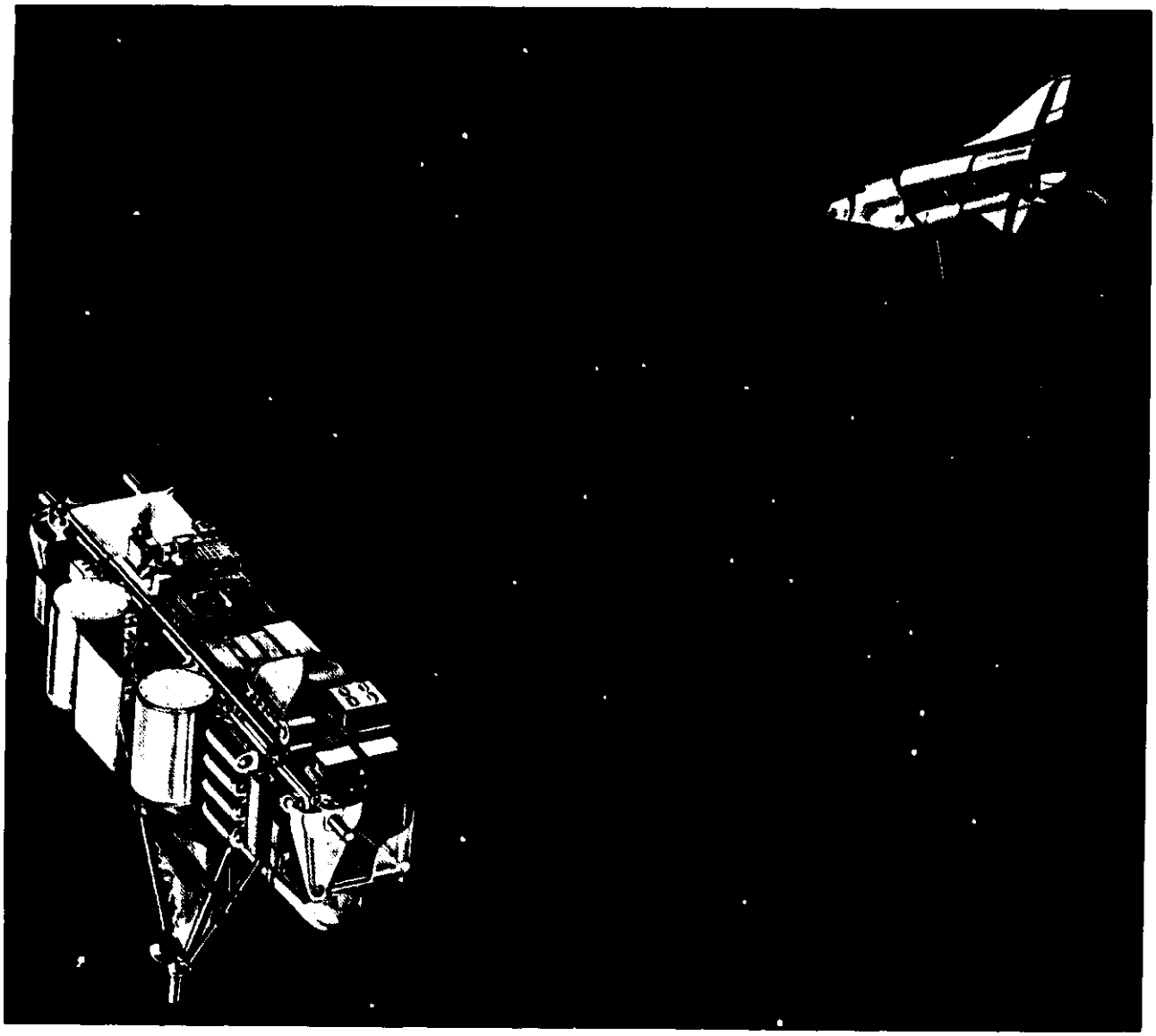

G

E p R b C UR CA
g d d h p p g m w
m p b h o d d w
m ph dE p p p m

A g h d pm m
g h EUR CA
m h d d 98 d d h
EUR CA d p dw db g d
h g d p d h pp d h K

d p C h Up h
EURECA d p h p p d w d b
h pp d b k p m d
h g m

EURECA w b q pp d w h b p op
g m b o m om h
m d b 00 km h op g
b p 600 km w m
d g b d d w h h

Shuttle. The ability to fly from the Shuttle to a useful orbit and back for rendezvous with the Shuttle is typical of most space platform concepts.

The EURECA will have a payload capacity of about 1,100 kg with the combined carrier and payload weighing approximately 3,500 kg. The total length of the carrier/platform, plus its payloads, in the Shuttle's cargo bay will be 2.3 meters, with an option for a shorter length of 1.6 meters if desired.

Energy for EURECA will be provided by deployable and retractable solar arrays that will initially deliver **5.4** kW of power at 28 volts. Of this output, 1 kW will be available to the payload on a continuous basis, while much of the balance will be required to charge the batteries that supply power when sunlight is not available.[4] The power supply for EURECA and its payload will be cooled using a fluid loop connected to a radiator.

EURECA payload and housekeeping data will be relayed to Europe via circuits employing the L-Sat communications satellite as a test. The telemetry system will normally use ground stations in Europe, but it will also be compatible with the Shuttle. The maximum data rate that can be processed on the ground by the proposed system is 2.5 kbps, although the on board system will be capable of transmitting up to 1 Mbps.

Size, mass, capacity, and data handling ability are the most stringent EURECA design constraints. If the data rate is restricted to 2.5 kbps, only film cameras can be accommodated. But if the full 1 Mbps data rate can be utilized, many science and applications instruments can be accommodated. However, large, high power, or high data rate payloads, such as telescopes, radars, lidars, multispectral scanners, or a combination of these or other instrument payloads cannot be accommodated. Increasing the available power level alone does not significantly improve the ability to accommodate such payloads, since science and applications instruments that require high power (e.g., remote sensing radars) also tend to have high data rate requirements (tens to hundreds of Mbps).

[4]More power would be available for payload use if it proves possible to operate the platform in a Sun-synchronous dawn-dusk orbit where it does not enter the Earth's shadow.

The cost of EURECA has not been clearly stated, although ESA has referred to a program cost of $170 million (1984$) that appears to include some payload costs.

Plans are also being developed for EURECA 11, an advanced version having increased power and payload capacity. The new design will allow space-basing and equipment exchange on-orbit, using the Shuttle or a yet-to-be-developed Ariane automatic docking system.

SOLARIS.-This French concept includes preliminary designs for an automated platform. It would be unmanned, located in LEO, and would use furnaces, a robot manipulator arm, solar power, and other subsystems. Ariane 4 would launch a transfer and supply stage, and a ballistic reentry capsule will bring processed materials back to Earth.

The first generation facility would have the following major elements:

- The Orbital Service Module (OSM), which is a user-shared platform with docking ports for payloads and transport vehicles.
- An in-orbit Transport Modular Vehicle (TMV) for resupply, transport, and servicing of space payloads.
- A Data Relay Satellite Communications System for control and high data rate transmissions.
- . The Ariane *4* launcher.

The intent is to fly the OSM in a circular "Sun-synchronous" orbit following a path over the twilight line, thus avoiding the Earth's shadow and thereby achieving a relatively high 10 kW of continuous power output for its users. Activities such as materials processing, microwave Earth observation, and assembly and check-out of large vehicles in orbit are envisioned. The orbit altitude could be adjusted from 600 to 1,000 km. Two docking ports would be available for TMV berthing, with five ports for payloads. Data transmission rates would not exceed 400 Mbps. The entire OSM weight would be 4,500 kg (excluding propellant).

The function of the TMV is to provide transportation service between the Ariane delivery orbit and the OSM, and to permit the return of a lim-

38-798 0 - 84 - 6 : QL 3

ited amount of equipment and products to Earth. The TMV will consist of an expendable module with propulsion, attitude and trajectory control, and the ability to rendezvous and dock.

The TMV can be used in either one-way or round-trip service. For one-way service the payload would be attached directly to the TMV module, and both would be placed inside the fairing of the Ariane 4 for launch. A 5,000-kg payload could be accommodated in this manner.

Round-trip service requires the use of a reentry vehicle similar to the Apollo reentry module. The TMV module is attached to the reentry body for launch in a manner similar to the arrangement for a one-way payload, and the two are separated during reentry. About 2,500 kg and 15 m^3 of payload could be accommodated within the reentry vehicle; it could touch down on either land or water and is designed for reuse.

The first generation SOLARIS concept is functionally similar to the science and applications space platform studied by NASA, except that SOLARIS specifies a dawn-dusk Sun-synchronous orbit. This orbit restricts its usefulness for many Earth-viewing projects that require lighting from the Sun. However, radars, lidars, and some microwave instruments can "see" in the dark and would not be affected, while solar-viewing instruments would gain the advantage of continuous visibility of the Sun. The ability of SOLARIS to support large, multiple instrument facilities should allow for accommodation of most of the solar physics payloads. However, a continuous full Sun orbit would be a problem for many celestial-viewing instruments that depend on Earth shadow to eliminate scattered light from the Sun. All automated life science activities and all materials processing, except for those requiring human presence, could be accommodated.

The orbit of SOLARIS is not suited to launch, retrieval, or servicing of low inclination satellites (including geostationary satellites), since a large orbit plane change is required. And, since most Sun-synchronous satellites are not in dawn-dusk orbits, a "latitude drift" would be required to service them. Some studies consider satellite assembly and service to be a major role for a "space station"; SOLARIS would be able to accommodate only a small fraction of this market.

Costs of the evolutionary SOLARIS program have not been defined, but they likely would be several billions of dollars (1984$) if the entire concept is developed.

Habitable Infrastructure

Although uninhabited platforms can be used to support many experiments and commercial processes that do not require human presence, and some activities require a stability that would be difficult to achieve if humans were present, other activities require or can be greatly aided by human presence. These include life science studies of humans in space, which are necessary to prepare for long duration human travel in space, and interactive experimentation in materials processing (e.g., pharmaceuticals, semiconductors, crystals), which is required in order to explore the commercial potential of materials processing.

A number of infrastructure elements other than the proposed NASA "space station" are available that can support humans in space.

Extended Duration Orbiter (EDO).–A major constraint on the duration of the on-orbit time for the Shuttle is the availability of electrical power. The current Shuttle power system uses three fuel cell powerplants fed by cryogenically stored hydrogen and oxygen, and delivers 21 kW on a continuous basis, of which 14 kW is allocated to the Shuttle itself and 7 kW is available for payloads. The fuel cells are fed from tank sets (one hydrogen and one oxygen tank in each set) located under the floor lining in the Shuttle cargo bay. Three tank sets are considered standard equipment. Two additional sets (for a total of five) can be installed with no volume penalty to payloads, but with a combined weight penalty (fully fueled) of 1,500 kg. The full complement of five tanks will provide a stay time of 8 days if the full 7-kW payload allocation is drawn upon continuously. Where little payload power is drawn, as might be the case for satellite repair or remote

sensing activities, the stay time could be as much as 12 days.

One obvious approach to extending the stay time is to add more tank sets. One such concept results in a stay time of 15 to **22** days, again depending on power consumption, by loading a four-tank-set carrier into the cargo bay. Such a carrier would shorten the usable length of the cargo bay by some 2 meters out of 18, and result in a 3,700-kg decrease in payload capacity. Extension of this approach to even longer durations has a practical limit because of the volume and weight capacity lost, and the limited storage lifetime of cryogens.

A 20-day stay time with 7 kW of power consumed by the payload, or up to 26 days if less power is consumed, can be achieved by using a solar array in conjunction with the five standard cryogenic tank sets. In one concept, the solar array would deliver 18 kW in sunlight, and the fuel cells would deliver 3 kW makeup power for a total 21 kW. During orbital eclipse of the solar array, the fuel cells would supply the full 21 kw. The RMS could deploy the array underneath the Shuttle, to avoid interference with the power system heat radiator and the field of view from the cargo bay. A previously proposed Power Extension Package (PEP) was identical in concept but was sized to provide 15 kw, instead of the normal 7 kw to payloads. The payload weight penalty for these concepts, including tank sets, is estimated at 2,300 to 2,700 kg. The cost to modify one Shuttle was estimated to be $100 million to **$200 million (1984$).** Spacelab would have been the principal beneficiary of the PEP, but the planned flights of Spacelab were judged to be not frequent enough to justify the expenditure.

To achieve stay times well beyond 20 days requires some radical changes in the power system, but the Shuttle could be designed for essentially limitless duration as far as power is concerned. Batteries would be used for power during Shuttle eclipse, and operation of the existing fuel cells would be limited to launch, reentry, or emergencies. The fuel cell reactants would be stored at ambient temperature and high pressure, thereby eliminating the storage lifetime constraint associated with cryogens. A 48-kW solar array would be required to provide power to recharge the batteries in sunlight; this power would be in addition to the basic 21 kW needed for Shuttle and payload power. The weight penalty for such a power subsystem is estimated to be about 3,200 kg.

Modifications are required in other areas as well. Flash evaporators that are currently used to supplement radiator heat rejection require large amounts of water in some attitudes, and to minimize reliance on them it would be necessary to increase the capacity of the radiators. With regard to habitability, water tanks must be added to compensate for water that is no longer generated by fuel cells and a regenerative CO_2 system would be required. Furthermore, for 15- to 30-day durations, the Shuttle habitable volume is only adequate to marginal for a crew of four. A reconfiguration of the mid-deck, recommended for 30- to 60-day durations on orbit, includes moving the airlock to the cargo bay. A Spacelab module would also be added to provide such crew amenities as a shower and an exercise and off-duty area as well as increased work area.

Among the activities which an EDO would be expected to support is satellite servicing. The Shuttle can reach a wide range of orbit inclinations and LEO altitudes, and the cargo bay, with its RMS and space for supplies and other support equipment, seems well suited for this type of activity. The technical feasibility of repairing satellites from the Shuttle was demonstrated on the Solar Maximum Mission Satellite in April 1984. With the Shuttle launch charges alone projected to be as much as $100 million for a dedicated flight before the end of the decade, the prospect of sharing a launch for this purpose along with other payloads and/or activities is a significant factor in the economic viability of such an operation.

In theory, with on-orbit infrastructure serving as an operations and distribution center, a Shuttle destined for it could carry not only supplies and equipment for the operation at hand but could be loaded with payloads and supplies to be left in space. Subsequent transfers to free-flyers, for instance, could then be accomplished with a lighter, more energy-efficient proximity-operations vehicle in contrast to the relatively massive Shuttle. The premise is that the saving

to be realized by utilizing the launch capacity of the Shuttle more effectively would, over time, more than offset the cost of the on-orbit infrastructure specifically designed to handle equipment and supplies. It is not clear to what extent the on-orbit infrastructure operations costs (both on-orbit and ground-support) are included in analyses of such operations. It is also not clear how total costs (facilities and operations) would be allocated among all users of a shared "space station" to establish the economic viability of any particular activity such as satellite repair and servicing.

Finally, an EDO could function as an observatory and a laboratory. There are adequate accommodations in the aft flight deck to control and monitor an observing payload such as one containing a large telescope. The Shuttle has no provision for laboratory operations beyond the accommodations available in the mid-deck lockers and, on some early flights, the main galley area. However, a Spacelab module, discussed in the following section, could be added to provide a shirt-sleeve working environment in the cargo bay. One drawback is that Spacelab consumes nearly half of the available 7 kW of payload power. Thus, electrical power for experiments would require careful management, and a more capable power system would be desirable for an EDO.

An EDO is estimated to cost about $2 billion (1984$) for the basic Shuttle, $300 million (1984$) for an upgraded habitation module similar to Spacelab, and $200 million (1984$) for the PEP. The full Shuttle launch cost would be incurred for each flight.

Spacelab.–The Shuttle carried Spacelab into orbit for its maiden flight in November 1983. Spacelab is a set of hardware that converts the cargo bay into a general-purpose laboratory for conducting science, applications, and technology investigations. It was financed and built jointly by ESA in close cooperation with NASA, providing a convenient means for working with a collection of experiments in a shirt-sleeve LEO laboratory environment. It augments the Shuttle services for powering, pointing, cooling, and controlling experiment hardware and for data handling and transmission to Earth.

Spaceiab is composed of two primary building blocks: modules and pallets. The module is a can-like pressure vessel approximately 4 meters in diameter that provides a shirt-sleeve working environment for the crew and rack accommodations for experiment hardware. The module consists of two end cones and one or two center sections (each 2.7 meters long). It may be used in either its long form (7.0 meters) or short form (4.3 meters) and may be flown alone or in combination with one or more pallets. The pallets are U-shaped structures 3 meters long that span the cargo bay and provide mounting for instruments that are to be exposed to the space environment. pallets may be flown individually or tied together in trains. For pallet-only projects, the computers and other subsystem elements normally carried in the module are housed in an "igloo" that can be attached to the forward pallet, The Spacelab hardware set also includes an Instrument Pointing Subsystem (IPS) capable of high-accuracy pointing for clusters of small instruments or a large telescope.

While both pallets and modules can be considered for use as independent space infrastructure, in its present form Spacelab is totally dependent on the Shuttle for its resources. Specifically, the Shuttle provides 7 to 12 kW of electrical power, 8 to 12 kW of cooling, data handling and data communication at rates of up to 50 megabits per second. Further, the Shuttle provides oxygen replenishment, and serves as both a crew residence and a safe haven under emergency conditions. Spacelab depends on these resources to provide a safe, stable laboratory environment.

Several stages in the evolution of the Spacelab module beyond the current generation have been studied, moving from complete dependence on, and attachment to, outside support elements, to relatively independent operation as a free-flyer that is resupplied every 6 months or so by the Shuttle or an OMV.

Spacelab With an EDO.–One version of the Spacelab that would be carried by an EDO utilizing a PEP, was studied by ESA in collaboration with NASA, The electrical and heat rejection sys-

Figure 6.— Major Spacelab Elements

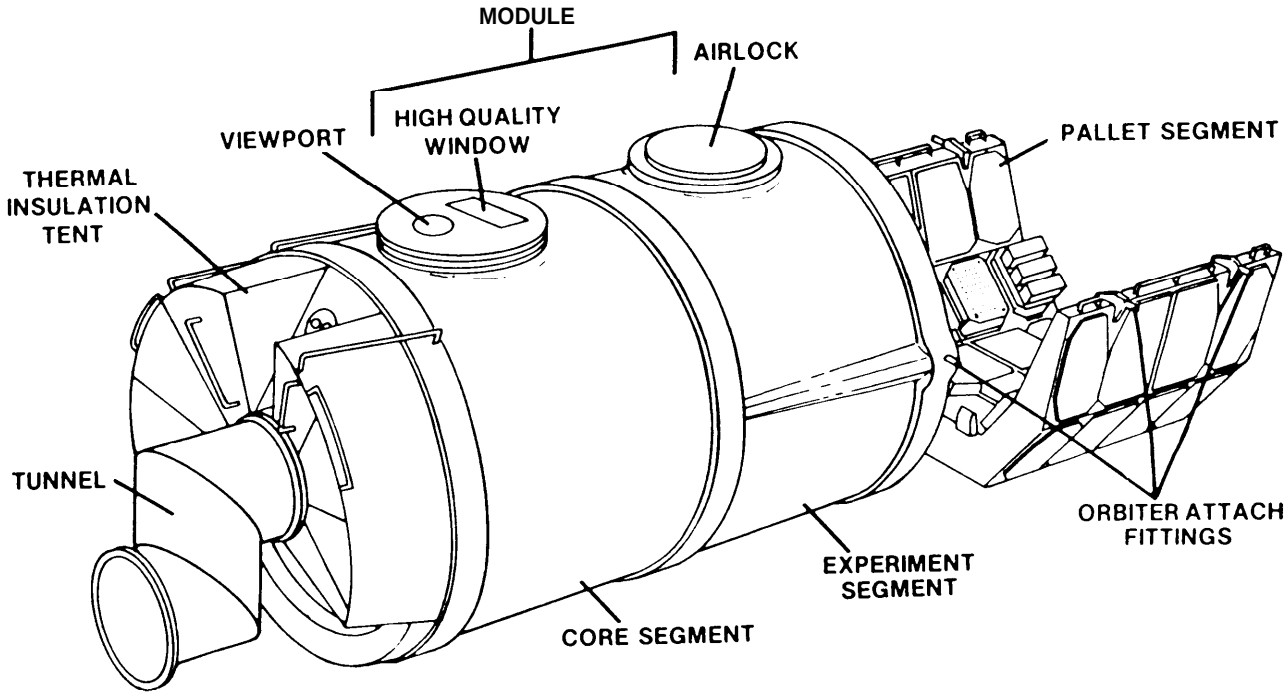

terns would be modified to handle increased power, and the command and data management system would be modernized. Since two Spacelab modules are now owned by NASA, additional costs would involve only the modifications and launch costs.

Spacelab as an Attached Module.–Another version would see the Spacelab used as a laboratory component of a "space station." The module would be lengthened to provide a greater shirtsleeve volume for more experiments and people, but in this case other connected infrastructure elements would replace the Shuttle as a support system. Either an existing NASA Spacelab module could be used for this purpose, or an additional module could be provided at a cost of $300 million (1984$).

Spacelab as a Free-Flyer.–A third version is that of Spacelab as an inhabited free-flyer. This would require the development of a dedicated service module that would provide the types of resources currently provided by the Shuttle.

For attitude control, there are a number of possible candidate systems which could be adopted. In Europe, for example, there is the ESA Modular Attitude Control (MAC) system, which is designed for general satellite application. This subsystem is in prototype form, and hardware tests are u rider way at present. Electrical power and cooling provisions would be required, as part of the dedicated services module, in the form of solar arrays, batteries, and a heat radiator with a cooling fluid loop. It is possible that the increased-capacity (12 kW) solar arrays under development by ESA, together with the ESA radiator, would be suitable. Command and data handling could be satisfied by commercial computer technology. Oxygen supply for the free-flying Spacelab could be handled by using the nitrogen tanks that are already available in Spacelab. However, for long durations on orbit, additional provision for oxygen supply would be necessary, which might possibly take the form of a water electrolysis system (as yet undeveloped). For crew habitation, the developed Spacelab free-flying module would

Figure 7.–Shuttle-Spacelab Flight Profile

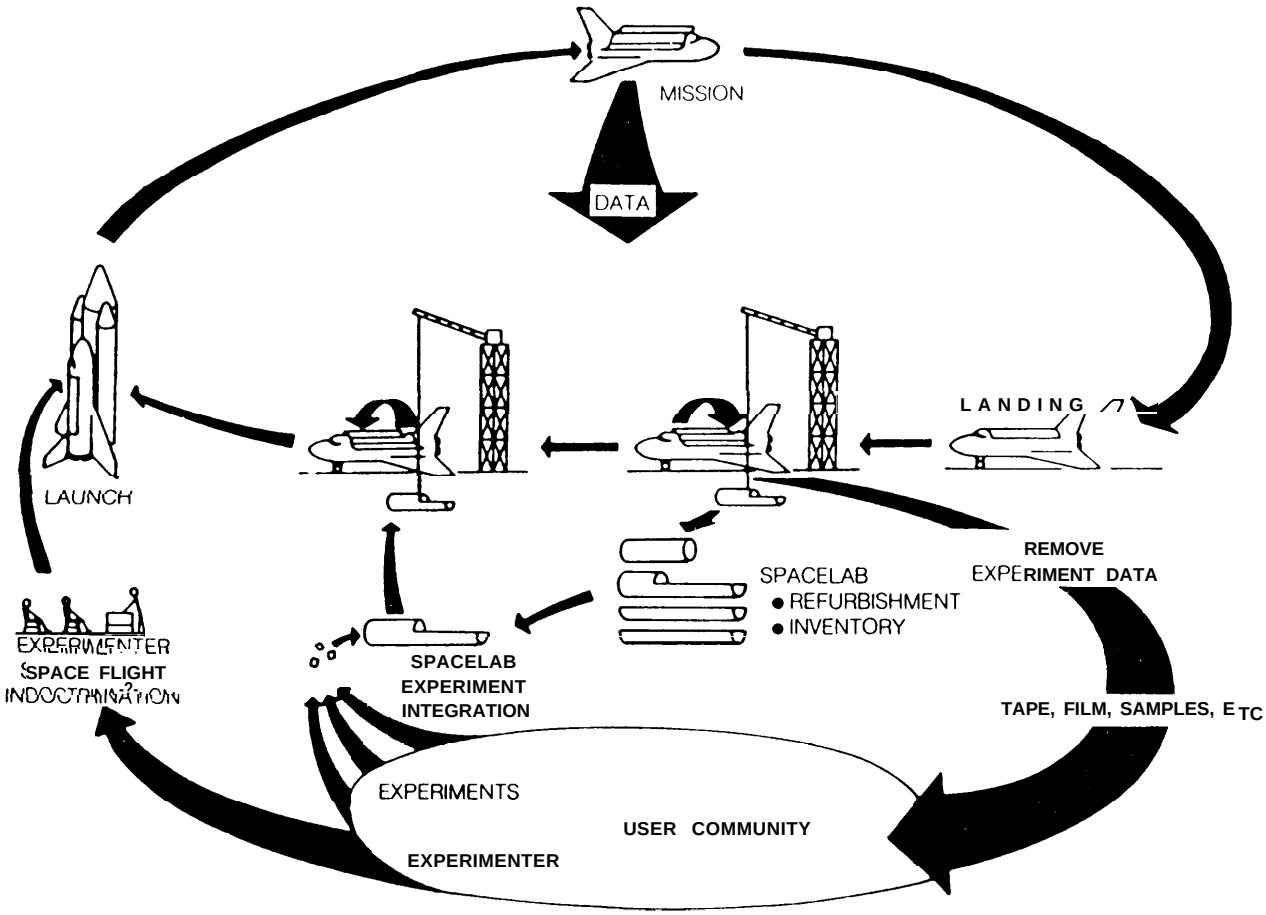

need to be based on a two-segment-long module as a minimum (7.0 meters), or preferably a three-segment-long module (1 O meters), in order to provide the necessary volume for sleeping, food preparation and consumption, waste disposal, exercise and recreational equipment, and commodity stowage. Crew-supported experiment and laboratory activities could be accommodated in a Spacelab-derived two-segment module, connected to the habitation module by an airlock; it would contain the necessary laboratory equipment and Spacelab-derived racks. The use of two modules connected via an airlock would provide the basis for a necessary safe haven in the event of a major failure in, or of, either module.

The use of two Spacelab-derived modules, combined with the associated dedicated service module, could provide long-duration infrastructure for human and automatic operations in space. An intermediate step in this direction would be the development of a two-segment Spacelab-derived module, coupled with a dedicated service module. The cost of such a development (designed for Shuttle resupply every 90 days) could be some $400 million (1984$). The two-module development costs would be considerably greater than for a one-module configuration, perhaps approaching $800 million (1984$).

To put the size of a Spacelab-derived free-flyer into perspective, it is interesting to compare the facilities described above to the Skylab facility which was orbited 10 years ago. A three-segment Spacelab module has roughly the same external dimensions as the Apollo Command and Serv-

ice Module's propulsion/resource system plus reentry vehicle, that part of the Apollo transportation system that rendezvoused with Skylab. The Skylab Orbital Workshop (OWS) provided primary habitation and work space 6.7 meters in diameter by 8.2 meters long or about **280** m^3 of volume. Thus, the volumes enclosed by the two- and three-segment-long modules contain 25 and 40 percent, respectively, of the habitable volume of the OWS, and together would total just 70 percent of the OWS volume. In addition to the OWS, some Skylab control and utility functions were housed in the airlock module and the Multiple Docking Adapter. Because of the dimensions of the Shuttle cargo bay, a number of Shuttle Launches would be required to build up a Spacelab-based infrastructure on a scale equal to Skylab.

The free-flying Spacelab could accommodate any payload currently envisaged for the Space lab module on the Shuttle. Some life science facility concepts now being studied use a dedicated Spacelab module as their basic structure. All life sciences studies could probably be performed; high-temperature furnaces for material processing may require higher power and cooling that could, if necessary, be provided by additional power modules. Commercial production facilities are not yet clearly defined, but if such production proves to be desirable, additional power and Spacelab modules could be added, if necessary, to accommodate it. A small fraction of the Earth or celestial-viewing instruments could utilize the scientific airlock or window of Spacelab, but this is a cumbersome way to handle such instruments. The only advantage of the Spacelab window or scientific airlock over a permanent external mounting position is easier access to the instrument, while the disadvantages include limited space, restricted field of view, and the necessity to handle the instrument whenever it is installed. However, viewing instruments could be installed and operated on one or more co-orbiting platforms.

Spacelab could serve as an operations control center for other space activities. Properly equipped, it could accommodate 100 percent of this function, although, depending on the number of activities conducted, more than one Spacelab module might be needed. The characteristics of, and the problems associated with, exchanging equipment in the Spacelab module indicate that its best use might be as a dedicated life and/or materials science laboratory, or as an in-space control center.

The idea of developing and using. existing Spacelab hardware for long duration human activities in space remains attractive in view of the maturity of the system building blocks. Limitations of the free-flying Spacelab concept, however, may be significant. As an example, it would be difficult to develop an efficient closed-loop life support system.

Spacelab as free-flyer, including a utilities module based on EURECA, has been estimated to cost $1 billion (1984$). Transportation costs would include an initial full Shuttle launch and subsequent supply and transport services via the Shuttle. An automatic docking service could be developed for resupply by expendable launch vehicles, but the cost of such a development is uncertain.

Columbus.–The Germans and Italians have proposed to ESA that the Columbus project, using Spacelab modules as components of a more extensive infrastructure, should become the ESA contribution to the U.S. "space station" program.

The plan, including three steps or phases, begins with a Spacelab module attached to a U.S. "space station, " providing laboratory workspace and deriving life support, power, attitude control, and other services from the parent "station. " A second step (fig. **8)** is an independent free-flying Spacelab with power, attitude control, and modest life support supplied by a service module fashioned after the EURECA platform. It would require direct resupply by the Shuttle or an OMV, provide laboratory workspace, and allow tending by a crew for up to **8** hours at a time. A third step would add another Spacelab one-segment module, with propulsion, to be used as a crew transport and servicing vehicle which might also be able to accommodate a small crew for short periods at the laboratory. By servicing the free-flyer, it would enable the Columbus module to operate autonomously for a few months at a time. This last phase is projected in Columbus program literature for possible implementation near the end

Figure 8.—An Artist's Conception of a Free-Flying Pressurized Module With an Attached Resource Module (second phase of Columbus concept)

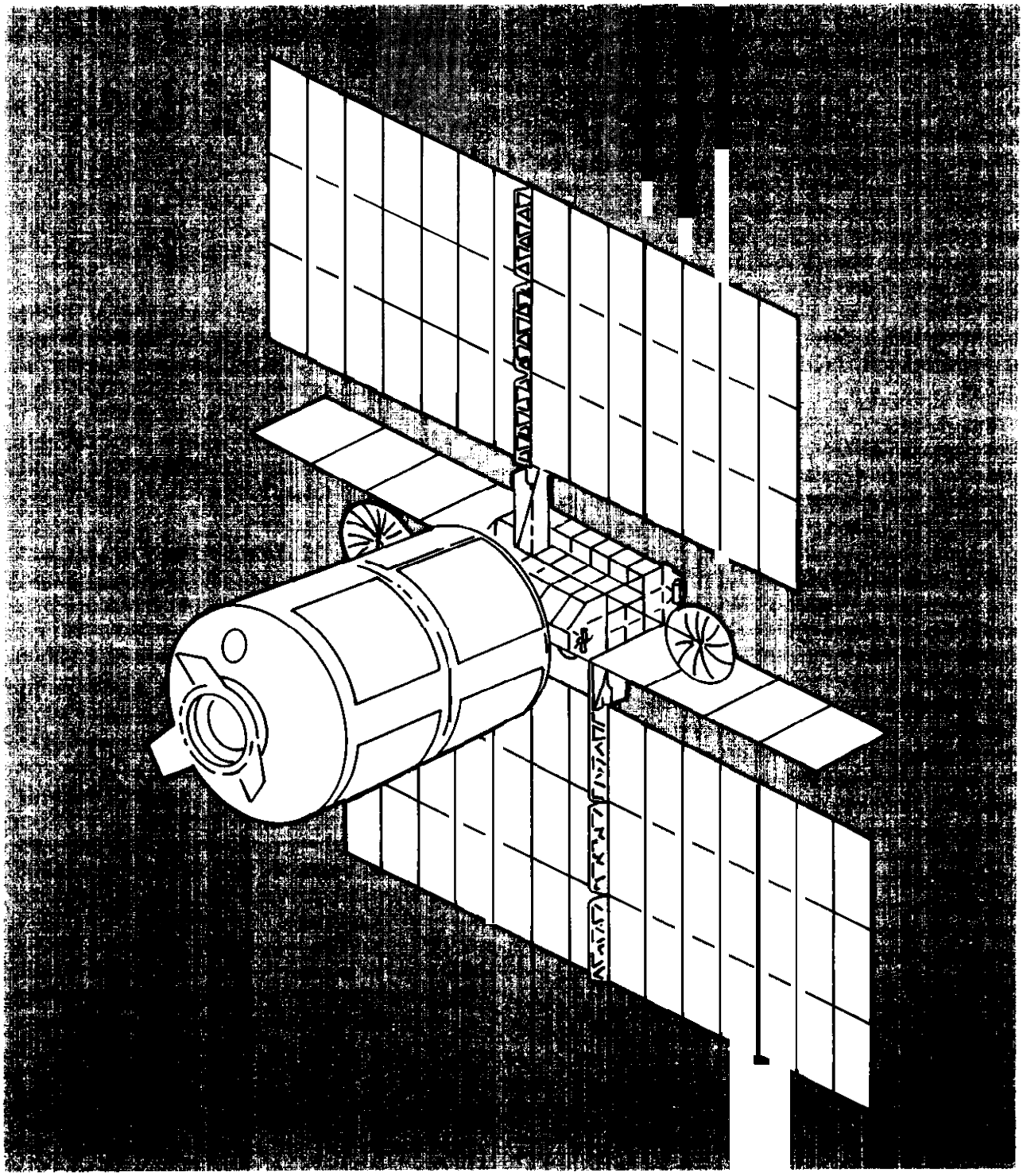

of this century. Cost estimates for a Columbus project are not yet available.

NASA Minimum Cost "Space Station. "-A study regarding a "space station" that would minimize costs by using Spacelab modules was performed at the NASA Marshall Space Center and was reported in 1982. It would provide sound and useful infrastructure, but would be of relatively modest dimensions in comparison with NASA's present aspirations. It would include a habitat module, a separate safe haven for emergencies, and a support systems module. It would be launched by the Shuttle and would have 1 kw of power and a scientific workspace. Later, another support system module and a docking adaptor would be attached, providing for the long-term support of three persons, an experiment module, pressurized and unpressurized experiment ports, gyroscopic attitude control, communications and data handling, and 6 kw of nominal user power. According to the NASA study, the cost of this facility would be $2 billion to $2.5 billion (1984$), assuming the use of an existing Spacelab module already in the inventory.

Shuttle as permanent Infrastructure. -In the discussion of the EDO, it was shown how relatively modest changes to the existing Shuttle vehicle could result in 20- to 25-day on-orbit stay times while more extensive modifications could make 30- to 60-day stay times attainable. A concept has been proposed by one Mission Analysis Study contractor group that would have major Shuttle and its external tank assemblies carried into orbit together to form permanent infrastructure. The basic Shuttle would be stretched to add 30 feet to the cargo bay and would be utilized without the wings, tail, and thermal protection subsystem. The main engines and the OMS engines would remain in place. The crew compartment would be stripped to make room for a control module. A command module would be located in the cargo bay. Major external tank modifications would include a power module with solar arrays which would mount on the nose, and a wraparound radiator for thermal control.

The Shuttle and its external tank also would use the Shuttle solid rocket boosters for launching as is the case for the conventional Shuttle. Upon its reaching orbit, the solar arrays would be deployed, the cargo bay doors would be opened, and the command module would be rotated into an upright position, thereby freeing the cargo bay for use in servicing and staging operations. A subsequent Shuttle launch could deliver a habitability module, logistics module, and crew.

The use of a basic Shuttle in this fashion would allow the very rapid acquisition of infrastructure able to serve as a habitable "space station" for a relatively low development cost.

Shuttle External Tank (ET) .-Application of the ET as an infrastructure element is intriguing because of its large size, because it achieves a near-orbital velocity during normal Shuttle launch operations, and because it "comes free of extra cost" to orbit. As a result, several aerospace companies have studied the ET for possible use on orbit.

The ET has an interior pressurized volume of some 2,000 m^3 in the form of two separate tanks—one for hydrogen, the other for oxygen.

In present Shuttle launch operations, the ET separates from the Shuttle and reenters the atmosphere after main engine cutoff. On average, at separation from the Shuttle, the ET still contains about 4,500 kg of liquid O_2 and H_2. The challenge is to identify practical methods of salvaging the tank and scavenging these residual propellants.

The ET in orbit, initially viewed as a construction shed and distribution center, might serve as a mounting structure for telescopes, large antennas, large solar power collectors, and experiment pallets, or it could be used as a component of inhabited infrastructure, in which case it would need windows and entry hatches. The most obvious use for the ET is for on-orbit fuel storage. This requires the least on-orbit modification, but assumes that the techniques and equipment needed to scavenge leftover fuel from the Shuttle and to store it for long periods in space are

The addition of a free-flying SPAS platform, at a cost of $0.005 billion (1984$) would increase the science/applications uses by three. Other platforms such as MESA, LEASECRAFT or EURECA could also be added. For example, the use of three EURECAs, which could be purchased at a cost of $0.6 billion (1984$) or leased annually at a fraction of this cost, would increase science/applications uses by 10. (In addition, while the system as described here would not serve as an assembly/launch platform, 9 out of 10 projected solar system probes could be designed to be launched with upper stages from the Shuttle.)

In summary, a "USA Salyut" that approximates the, Soviet Salyut 7 could be assembled using essentially existing or currently under-development technology, i.e., Spacelab modules and a service module composed of EURECA or LEASECRAFT-type power and attitude controls. With the added cost of several free-flying platforms, it could support most of the science and applications experiments and about one-third of the commercial and technology development activities now described by NASA as requiring long-term space infrastructure. Among the science a@@@ it could not support are what NASA describes as the Large Deployable Reflector, Mars Sample Return, Earth Sciences Research Platform, and Experimental Geosynchronous Communications Platform. Operationally, the size, power, and port capabilities of the infrastructure would mean the pace@ research and development work would necessarily be less than half as rapid as with the NASA-proposed IOC space infrastructure. If started in 1985, it could be operational by about 1990 at a cost of roughly $2 billion (1984$).

Of course, any design aimed specifically toward current rough equivalence with the Salyut 7 may miss the mark by the time it becomes operational, because Soviet space infrastructure could be quite different by 1990. However, the general comparison of capability and cost is illuminating.

'Described in detail in the OTA Technical Memorandum *Salyut—Soviet Steps Toward Permanent Human* Presence in *Space,* December 1983.

developed. Use as an uninhabited warehouse or unpressurized, sheltered workshop in space only requires that the tank be purged of residual fuel, since several access openings (larger than 1 meter diameter) already exist.

A concept to use ETs as components of habitable infrastructure has been developed by the Hughes Aircraft Co. In this concept, four ETs would be taken separately into orbit and then joined to form the spokes of a large wheel-like structure. Solar panels would be mounted on a rim connected to the outer ends of the ET spokes, providing 150 kW of power. The wheel would rotate, and a "despun" module at the hub of the wheel would provide zero gravity workspace. The basic feasibility of this "dual-spin" system has been demonstrated on a much smaller scale in over 100 successful communications satellites built by Hughes. Modules attached to the outer ends of the ETs, carried into space as aft cargo carriers, would be available for habitation and pressurized workspace. Rotation of the wheel would provide artificial gravity in the spinning part of the facility and gyroscopic action for attitude control.

This innovative concept has several obvious advantages. There is no doubt that many human activities, such as eating, drinking, food preparation, showering, and dealing with human waste, would be much easier to carry on in the artificial gravity environment provided by this system. And possible health problems associated with long-term living in microgravity, such as decalcification of bones and atrophy of muscle and connective tissue, could be avoided. In general, the presence of spin and a choice of gravity regimes, ranging from microgravity to artificial gravity simulating what we are used to on Earth, should prove to be useful in solving a number of human, scientific, and engineering problems.

Figure 9.—External Tank Structure

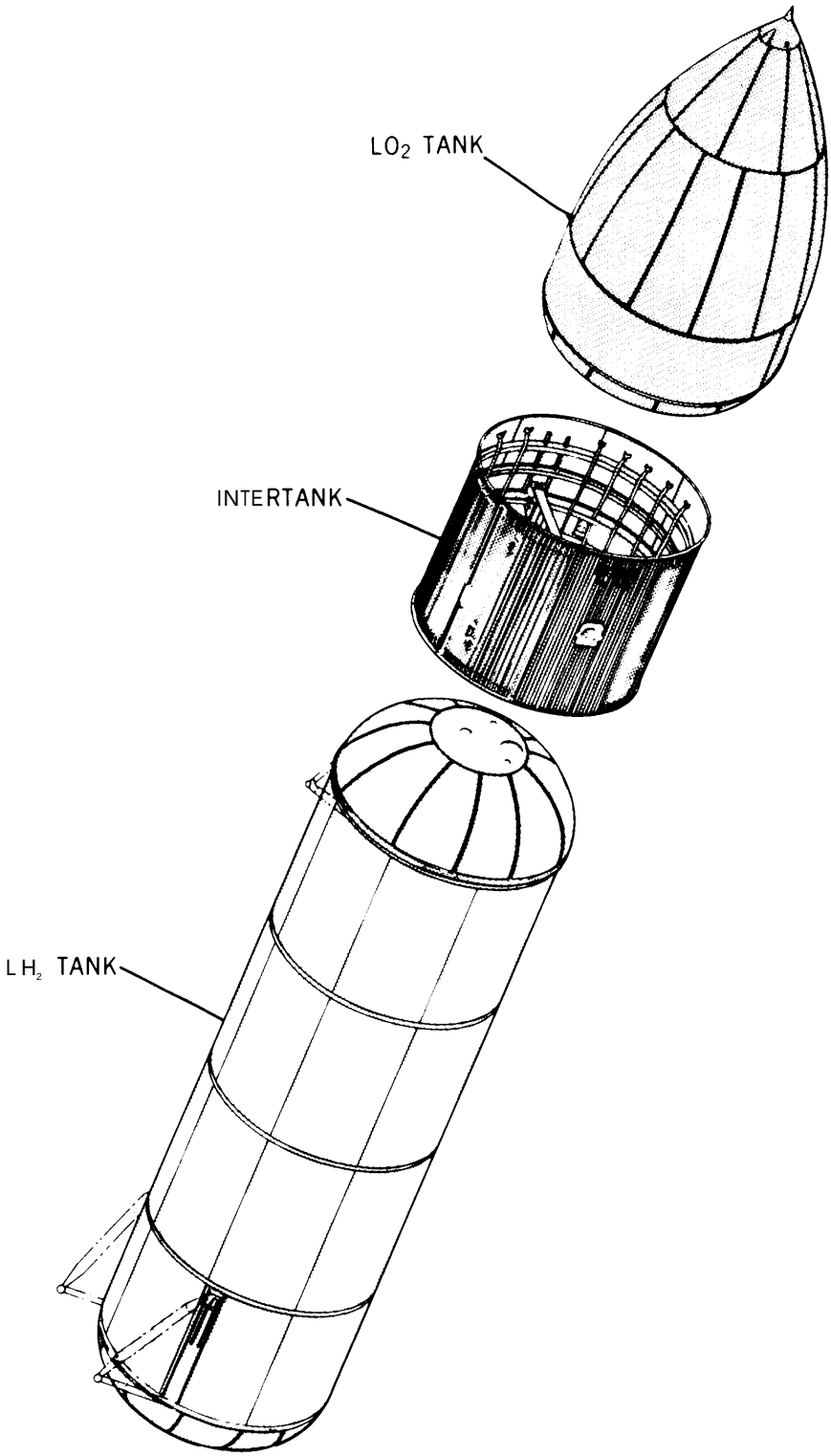

Figure IO.— Possible Uses of External Tank

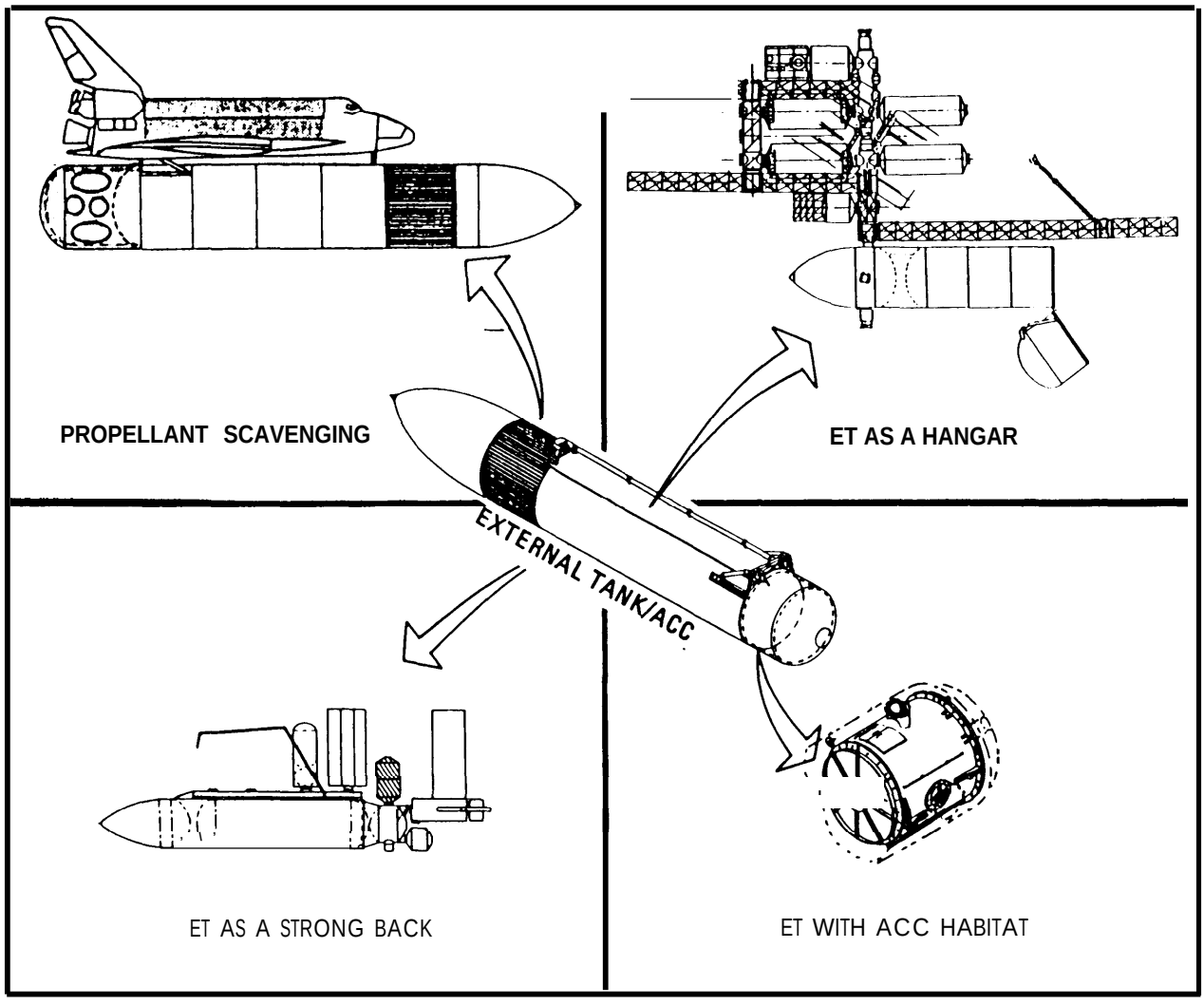

Figure 11 .—Concept of Infrastructure Utilizing Four External Tanks

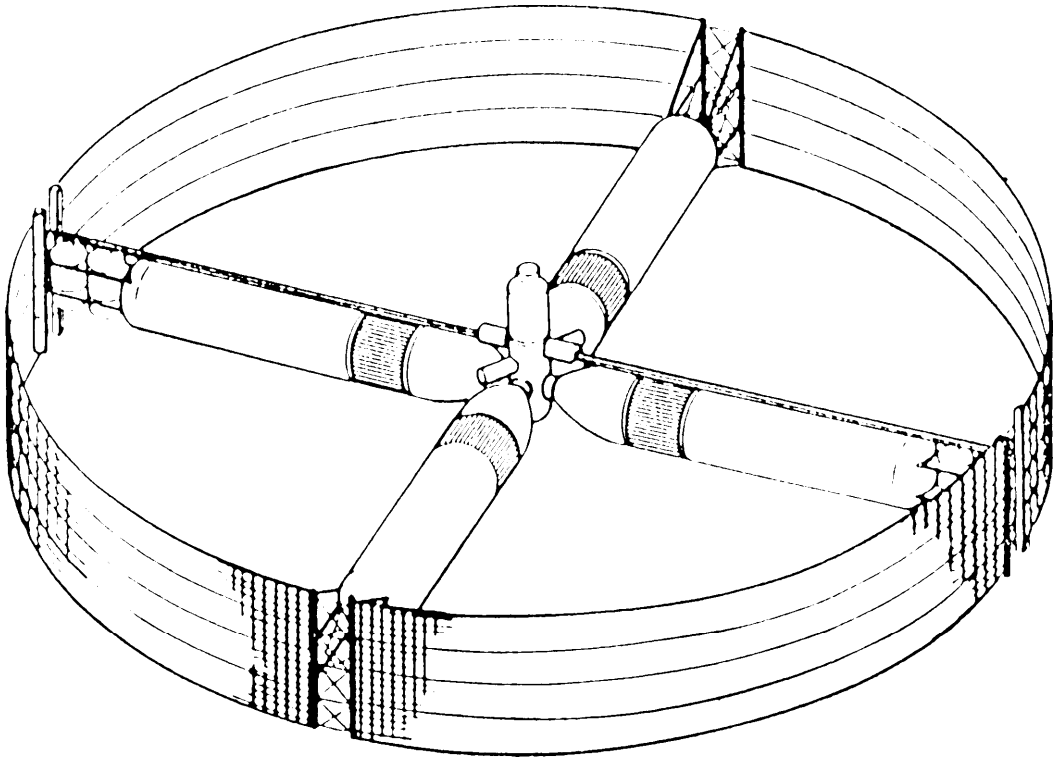

Chapter 4

A BUYER'S GUIDE TO SPACE INFRASTRUCTURE

Contents

Page

Summary 85

Procurement Options 85

A Catalog of Space Infrastructure 87

Cost Drivers 91

People and Automation in Space 92

Alternative Funding Rates 94

Conclusions 97

LIST OF TABLES

Table No. *Page*

6. Comparison of Some Options for Low-Earth-Orbit Independently Operating Infrastructure **88**
7. Space Infrastructure Platforms That Could Be Serviced by Shuttle or an Orbital Maneuvering Vehicle **89**
8. Some Illustrative Space Infrastructure Acquisitions Possible at Various Annual Average Federal Funding Rates **97**

Chapter 4

A BUYER'S GUIDE TO SPACE INFRASTRUCTURE

SUMMARY

If the United States decides to acquire a substantial amount of long-term space infrastructure, there are various ways to proceed that should be carefully considered, including the degree to which new technology would be used, whether NASA should set design or performance specifications, and the roles of the private sector and international partners. The costs and capabilities of a number of possible infrastructure options are compared in a table format. The cost drivers associated with the listed options and OTA's approach to cost estimation are discussed. The next section examines a number of tradeoffs that should be considered regarding the use of automation and people in a "space station. " Buyers may reasonably decide to acquire space infrastructure using an average annual funding rate rather than a "lump sum" approach. Possible infrastructure that could be obtained using average annual funding rates of $0.1, $0.3, $1, and $3 billion (1 984$) are presented. The functions that NASA intends to provide in a "space *station"* are listed, and alternative infrastructures that could provide those functions are indicated. '

[1] **In addition to the two OTA workshops mentioned specifically in the following text, sources of information for ch. 4 include the same references noted in ch. 3 for possible infrastructure elements and their estimated acquisition costs.**

PROCUREMENT OPTIONS

If there is an affirmative answer to the questions of **whether to acquire long-term in-space infrastructure (and, if so, how much, of what kind, and when), there yet remains the decision of how it is to be acquired. In many respects, this** second decision is just as important as the first. The mode of acquiring new, long-term, in-space assets and services should be influenced by a clear understanding of the contemporary context in which space activities are carried on. And the decision as to how to acquire these assets and services will have a significant impact on the future of space activities.

The pioneering, generous, and effective efforts of the U.S. Government, and of NASA in particular, have resulted in the spread of civilian space capabilities and expertise throughout much of the world, to the point where they are now essentially beyond the power of the United States to control even if it is of a mind to do so. Many of the nations of Europe, and Japan, Canada, India, Brazil, and the People's Republic of China as well, are increasingly positioning themselves to pursue their own interests in space, independent of what the United States might desire. Other countries' evident success with Spacelab, with Ariane and its launch complex, and in the field of satellite communications has given them great confidence in their abilities to work in full collaboration with the United States on major space programs and, before long, to undertake such programs without the United States, should they then deem that to be appropriate.

The U.S. private space industry is also fully capable of developing all or most of the ensemble of low-Earth-orbit (LEO) infrastructure elements needed to provide a more-than-adequate initial operating capability (IOC) of the type now being studied by NASA. With the important exception of satellite communications, our industry in the past has undertaken work exclusively under contract to the Government. However, the past several years has seen the beginning of important space activities undertaken wholly on private initiative.

Some of these private sector activities and some of those undertaken by other countries will be

38-798 0 - 84 - 7 : QL 3

in direct competition with what many in NASA now perceive to be their own important institutional interests.

With the completion of the Shuttle development program now in sight, the United States faces a major decision as to whether–and, if so, how–to redeploy a large fraction of NASA's resources. Under present circumstances, NASA, as in the past, would prefer to undertake another large technological program, similar to the Shuttle, to serve as the major agency focus, rather than to spread its efforts over a number of activities that could be more demanding and more useful. Of the various candidate activities, NASA has chosen to concentrate on the acquisition of a great deal of long-term, habitable LEO infrastructure.

Congress and the President have approved NASA's request to initiate a "space station" program, and NASA appears to be moving to acquire such infrastructure in much the same fashion that it acquired the Shuttle:

- A great deal of new technology would be developed, acquired, and used, essentially all of which would be publicly funded.
- NASA would arrive at and issue detailed engineering specifications for, and exercise close management control over, the technology to be acquired.
- This infrastructure would be procured by NASA with Federal funds. The U.S. private sector would not be prompted to use its own resources to provide a substantial portion of the infrastructure.
- The international role would be limited. NASA would not seek the kind of close collaboration that would result in shared authority, even if it might provide substantial capital cost reduction for the United States.

A significantly different acquisition approach would have the following elements:

- As far as is reasonably possible, already developed, tested, and paid-for technology would be used to achieve an adequate IOC, with development of new technology undertaken only where demonstrably required to lower overall cost of ownership.
- NASA would prompt our private commercial-industrial-financial sectors to develop and produce, with their own resources and on a genuinely competitive basis, as many of the Government-required civilian "space station' assets and services as they can; NASA would facilitate their efforts to do so; and they could be offered to NASA on a sale, lease, or payment-for-service-provided basis.
- NASA, in obtaining the elements not provided by the private sector, would emphasize management methods specifically designed to take the best advantage of the now quite sophisticated U.S. space industry (see app. D, "Synopsis of the OTA Workshop on Cost Containment of Civilian Space infrastructure [Civilian "Space Station"] Elements).
- NASA would negotiate collaborative agreements with other cooperating countries that would see all partners share in the benefits of such an IOC at a reduced acquisition cost to the U.S. Government for its share.

This second approach would imply that NASA would hand off much (perhaps most) of the more mundane "space station" work by paying the private sector to do it, thereby conserving its skills and resources so that they could be focused on more challenging space goals and objectives, including the development of the very advanced technology (e.g., bipropellant engines, a reusable orbital transfer vehicle, . . .) required, an activity which, for the most part, the private sector cannot justify.

These two options are at opposite ends of a spectrum of approaches to the acquisition of long-term space infrastructure. in determining which approaches from this spectrum are most likely to influence the evolution of space activities in a desirable direction, Congress may wish to consider the following questions:

- Should the Government be allocating its professional skills and experience to the development of: 1) incremental or 2) fundamental advances in technology?

- Which approach is most likely to stimulate the "commercialization of space"?
- What level of international collaboration is really desirable?
- What other large and important space ends should be addressed in the next decade or two in addition to the acquisition of in-space infrastructure methods and means?



A CATALOG OF SPACE INFRASTRUCTURE

The fact that the United States has already developed a wide variety of space capabilities means that it has genuine choices—both of what infrastructure elements it places in orbit and of how these elements are to be acquired and used. It is around these choices that the difficult issues lie; by and large, the technology is either in hand or can be readily developed.

It must be emphasized that the particular constellation of space infrastructure elements which NASA currently aspires to develop, construct, deploy, and operate is only one alternative in a wide range of options. Simply put, there is no such thing as **"the** space station. " What is under discussion is a **variety of sets of infrastructure elements, ranging from modest extensions of current capabilities to vastly more sophisticated, capable, and costly ensembles than NASA is now suggesting.**

As one way of presenting the variety of technology options available, OTA has prepared tables 6 and 7.[2]

[2]These tables were prepared in response to the congressional committees which requested this assessment, Ch. 3 discusses infrastructure options in detail.



Photo credit: Natlonal Aeronautics and Space Administration

One option for modestly increased length **of stay in space is a Shuttle Orbiter modified for extended flight—the Extended Duration Orbiter, or EDO. Such a configuration might involve large solar panels for extended electrical power, as shown here.**

Table 6.—Comparison of Some Options[a] for "Low Earth" Orbit Independently Operating Infrastructure

	Shuttle Orbiter	Extended Duration Orbiter: Phase I	Extended Duration Orbiter: Phase II	Free-flying spacelab (developed as permanent infrastructure)	NASA infrastructure aspirations: Initial operational capability	NASA infrastructure aspirations: Mature, fully developed
Date available (assuming start in 1985)	Now	1988	1990	1990	1992	1996-2000
Cost[b] (billions of fiscal year 1984 dollars)	None	0.2	0.5	2-3	8	20
Characteristics						
Power to users (kW)	7		20	6	60	200
Pressurized volume (m^3)	60		(with spacelab habitat)	100	200	300
Nominal crew size	6	5	5	3	8	20
Miscellaneous	Can accept Spacelab	No new technology	New technology required; modest laboratory space	Modest crew accommodations	Orbital maneuvering vehicle plus two free-flying unpressurized platforms	Reusable orbital transfer vehicle plus several more platforms
Capabilities[c]						
Time on Orbit	10 days	20 days	50 days	Unlimited (60-90 day resupply)	Unlimited (90 day resupply)	Unlimited (90 day resupply)
Laboratories for:						
Life sciences	Moderate	Moderate	Considerable	Extensive	Extensive	Extensive
Space science/applications	Modest	Modest	Modest	Modest	Extensive	Extensive
Materials science	Some	Some	Moderate	Moderate	Extensive	Extensive
Technology development	Modest	Modest	Some	Moderate	Extensive	Extensive
Observatories	No	Modest	Modest	Modest	Extensive	Extensive
Data/communication node	No	No	No	No	Considerable	Extensive
Servicing of satellites	Modest	Modest	Modest	Modest	Considerable	Extensive
Manufacturing facility (materials processing)	No	No	Modest	Modest	Considerable	Extensive
Large structure assembly	No	No	No	Modest	Moderate	Extensive
Transportation node	No	No	No	No	Moderate	Extensive
Fuel and supply depot	No	No	No	No	No	Considerable
Response to reasons advanced for space infrastructure						
Maintain U.S. space leadership and technology capability	No	Modest	Modest	Modest	Considerable	Extensive
Respond to U.S.S.R. space activities	No	Modest	Modest	Modest	Considerable	Extensive
Enable long-term human presence in space	No	Modest	Modest	Considerable	Extensive	Extensive
Attention-getting heroic public spectacle	No	Modest	Modest	Modest	Modest	Modest
Extended international cooperation	Modest	Modest	Moderate	Moderate	Moderate	Moderate
Promote U.S. commercialization of space	Modest	Modest	Modest	Considerable	Considerable	Considerable
Maintain vigorous NASA engineering capability	No	No	No	Modest	Extensive	Extensive
Enhance national security, broadly defined	No	No	No	Modest	Unclear	Unclear
Space travel for non-technicians	Modest	Modest	Modest	Modest	Considerable	Considerable

[a] Listed options are illustrative examples; the list is not exhaustive.
[b] Costs include design, development, and production; launch and operational costs are not included. Some costs are estimated by the Office of Technology Assessment; others were provided to OTA.
[c] Clearly judgmental.
[d] Including launch to the Moon, Mars, and aome asteroids.

Examples of habitable infrastructure are shown in table 1. First, the present Shuttle Orbiter and its possible modifications for somewhat extended (but not permanent) stays on orbit (i.e., a so-called Extended Duration Orbiter—EDO) are listed, followed by one version of Space lab developed into a free-flying inhabited facility. Finally, the present NASA-envisioned space station" concept is given, including both the IOC version with an estimated completion in 1992,

Table 7.—Space Infrastructure Platforms[a] That Could Be Semiced by Shuttle or an Orbital Maneuvering Vehicle

	Unpressurized coorbiting platforms (serviced by means of extravehicular activity)				Pressurized platforms (serviced internally while docked)	
	SPAS	MESA	LEASECRAFT	EURECA	Space Industries' Platform	European Modified Spacelab
Date available (now, or approximate, assuming start in 1985)	Now	Now	1986	1987	Late 1980's	1989
cod' (billions of fiscal year 1984 dollars)	0.005	0.01	0.2	0.2	0.3	0.6
Characteristics						
Power to users (kW)	0.6	0.1	6	2	20	6
Pressurized volume (ft^3)	None	None	None	None	2,500	3,000
Nominal crew size	None	None	None	None	1-3 only when docked	3
Miscellaneous	3,000 lb Payload	200 lb Payload	20,000 lb Payload	2,000 lb Payload	25,000 lb Payload	20,000 lb Payload
Capabilities[c]						
Time on orbit	10 days	8 months	Unlimited	6 months	3-6 months	Unlimited
Laboratories for:						
Life sciences	No	No	Modest	Modest	Modest	Moderate
Space science/applications	Modest	Modest	Modest	Modest	No	Moderate
Materials science	Modest	No	Modest	Modest	Moderate	Moderate
Technology development	No	No	Modest	Modest	Moderate	Modest
Observatories	No	No	Modest	Modest	Modest	Moderate
Data/communication node	No	No	No	No	No	No
Servicing of satellites	No	No	No	No	No	No
Manufacturing facility (materials processing)	No	No	Considerable	Modest	Extensive	Considerable
Large structure assembly	No	No	No	No	No	No
Transportation node (assembly, checkout, and launch)	No	No	No	No	No	No
Fuel and supply depot	No	No	No	No	No	No
Response to reasons advanced for space infrastructure						
Maintain U.S. space leadership and technology capability	No	No	Modest	No	Modest	No
Respond to U.S.S.R. space activities	No	No	Modest	No	Modest	Modest
Enable long-term human presence in space	No	No	No	No	No	No
Attention-getting heroic public spectacle	No	No	No	No	No	No
Extended international cooperation	Yes	No	No	Yes	No	Unclear
Promote U.S. commercialization of space	Unclear	Modest	Considerable	No	Considerable	No
Maintain vigorous NASA engineering capability	No	No	No	No	No	No
Enhance national security, broadly defined	No	No	No	No	No	No
Space travel for non-technicians	No	No	No	No	No	No

[a] Listed platforms are illustrative examples; the list is not exhaustive.
[b] Costs include design, development, and production; launch and operational costs are not included. Some costs are estimated by the Office of Technology Assessment; others were provided to OTA.
[c] Clearly judgmental.

and a mature, fully developed facility (1996-2000).

The parameters for each option that may be used for rough comparative purposes are:

. Approximate date of availability—assuming that an acquisition (in contrast to a study) "go-ahead" were included in the fiscal year 1987 budget.

- Cost (in fiscal year 1984 dollars)–to produce the capabilities shown. The estimates are based on sources such as industry reviews, company publications and meeting presentations, aerospace periodicals, and NASA information releases. Inasmuch as some options utilize existing hardware, the costs do not reflect similar proportions of development and production efforts for the various options.

- Characteristics–several design parameters and sizing factors that provide the bases for infrastructure capabilities.
- Capabilities—the types of functional activities that the listed infrastructure could support, and the degree to which these activities might be accomplished.
- Responsiveness of a given infrastructure-to the various reasons put forward for having a civilian "space station," including any long-term presence of human beings in space.

If great and long-range space activities (for instance, the establishment of a lunar human settlement or the return of materials from the asteroids or Mars) come under consideration, they would appear to be achievable using a sophisticated reusable orbit transfer vehicle (ROTV) coupled with on-orbit assembly, check-out, launch, and recovery. The one option listed in table 1 that could provide these capabilities is the NASA fully developed infrastructure.

Examples of uninhabitable "free-flying' space platforms are shown in table 2. These platforms, or others, could be used in conjunction with, and serviced by, any of the options listed in table 1. In this way, additional capabilities could be added to the infrastructures given in table 1, SPAS and MESA are currently existing commercial platforms that were financecj and developed by the private sector. LEAS ECRAFT is also a private venture now under development.

Some cautions should be noted in the interpretation of this information. General descriptions of the various options are given, an estimates of their capabilities. These capabilities can be expected to change in some cases. Most of the capabilities have been described by qualitative adjectives. Quantitative estimates are rounded off to one figure. In the fifth section of the tables, "Response to the Reasons Advanced for Space Infrastructure," the comparisons clearly must be qualitative and judgmental in nature and are presented simply to bring these factors to the attention of the reader. For instance, as a particular item the Spacelab option of table 2 is only one of several that have been put forward; one by European Space Agency (ESA) countries could definitely augment international cooperation if it were implemented.

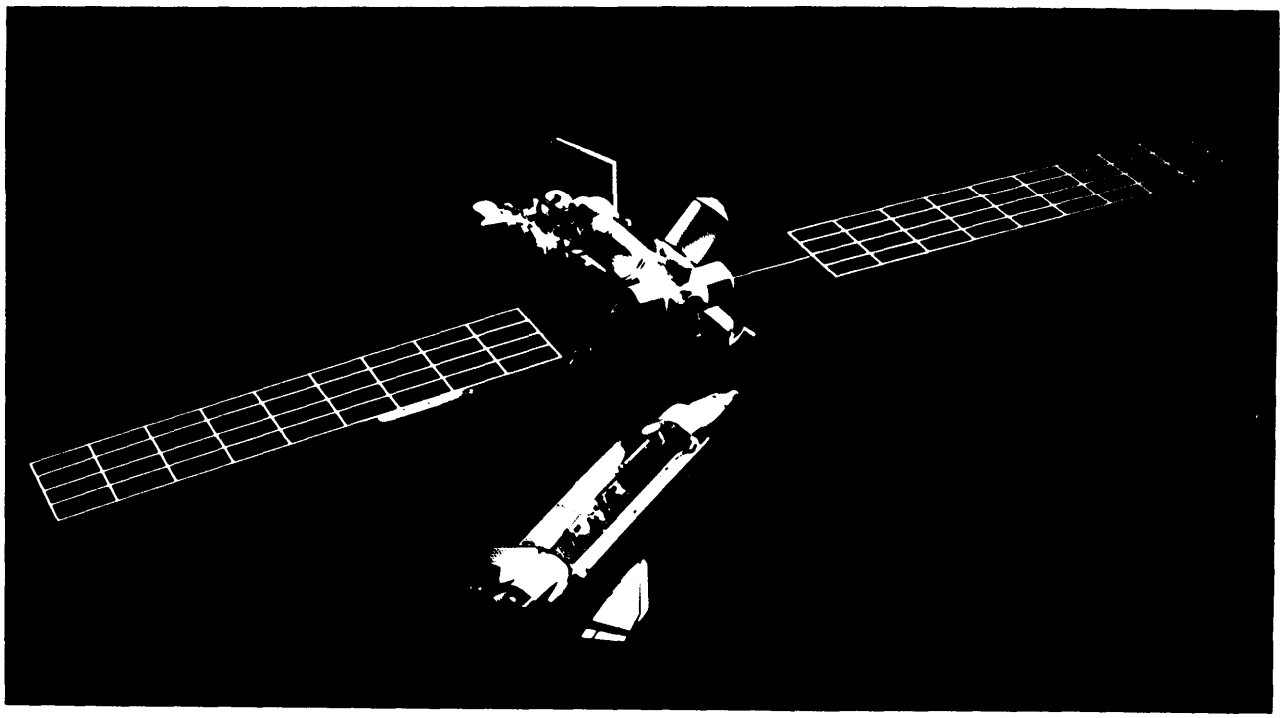

N

COST DRIVERS

Beyond the observation that, in some general fashion, the cost will increase with the capability and sophistication of the infrastructure acquired, it is difficult to estimate the eventual cost of this capability to the Government. At least all of the following factors could have an important influence on this cost:

1. the total capability acquired–which, as suggested by the examples listed in the tables of infrastructure options, can encompass a considerable range;
2. the extent to which already developed, tested, and paid-for technology is used, v. a focus on new technology with its higher development cost and greater risk of cost overruns;
3. the substitution, where feasible, of automated systems for the accomplishment of tasks previously undertaken only by human beings;
4. the manner by which the infrastructure is acquired, i.e., the extent to which NASA puts the engineering challenge on the space industry by issuing performance specifications, rather than continuing to issue detailed engineering specifications and managing the acquisition process in detail;
5. the effectiveness of NASA's efforts to persuade our private sector to develop infrastructure assets and services "on their own, " and to provide them to the Government at purchase, lease, or service-payment prices lower than those achievable by the Government;
6. the effectiveness of NASA's efforts to effect eventual private sector operation of the infrastructure and its related activities;
7. the extent to which large and rapid expansion of military space research, development, test, and evaluation (RDT&E) activities increases costs in the civilian space sector also;[3]
8. the extent to which any "Christmas-tree effect" takes place within NASA, whereby the infrastructure acquisition management is persuaded by the NASA Centers to allow the cost of desirable but nonessential RDT&E activities to be included in the acquisition; and
9. the effectiveness of NASA's efforts to arrive at large-scale collaboration and related cost-sharing arrangements with other countries.

These points address only the initial capital cost of this infrastructure—to this cost must be added its ongoing operation and maintenance costs; the cost of instruments, furnaces, etc., needed for scientific experimentation in association with its use; and the interest cost of any money borrowed to fund the acquisition program. And it must be remembered, too, that the infrastructure will eventually become obsolete or wear out.

It is clear that there are many opportunities to reduce infrastructure net cost that could be grasped by a vigorous, imaginative, and determined NASA management.[4]

These considerations suggest that, over the next year or two, at least as much attention should be given to identifying the best ways by which the country should set about the permanent development of space as there is given to any technological advances and operational capabilities that are to be obtained.

[3]Classified material was not used in preparing this report.
[4]Cost reduction measures are discussed in app. D of this report.

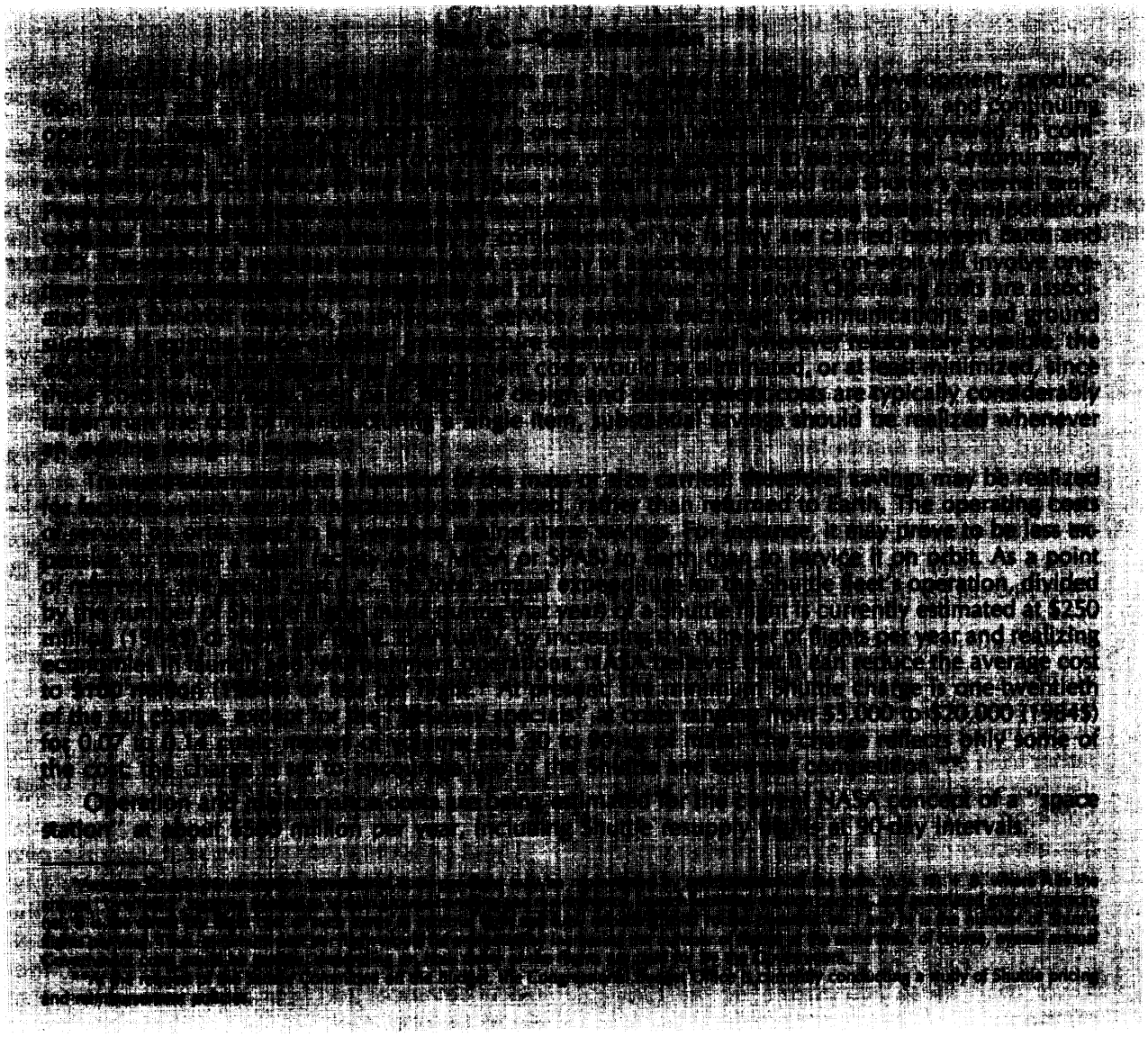

PEOPLE AND AUTOMATION IN SPACE

One of the most important, and vexing, infrastructure issues is that of the proper mix of sophisticated people and sophisticated machines (automation) to be employed in work activities in spaces

The OTA conclusions are as follows:

1. **If specifically designed to do so, any civilian "space station" program could effectively serve as a high-visibility focus for promoting research and development in all disciplines in the field of automation.** important advances in terrestrial applications of automation could be expected to follow from a vigorous space automation program.
2. **However, there is a firm consensus among**

[5]In arriving at judgments on various "man/machine" issues OTA, in close concert with senior congressional staff members, designed and convened a workshop which brought together many of the Nation's experts in "smart machine" development from the Government, industry, and academic communities with OTA and congressional staff professionals.

scientists and engineers in the various automation disciplines that current automated equipment could not accomplish many of the functions envisioned by NASA for an early 1990s "space station. " This situation results, in part, because NASA has invested relatively few resources to develop automated capabilities specifically for general-purpose infrastructure-support (in contrast with special-purpose scientific) space activities. In addition, the academic and industrial advanced automation research community numbers only a few hundred.

3. Therefore, if the kind of overall operational "space station" now envisioned by **NASA is to be functioning by the early** 1990s, **it will have to include people. Conversely, if it is to be wholly or mostly automated, it could not become operational until** 5 **to 10 years thereafter, even with a major automation R&D effort.** However, if any of the aspirations of those now conducting research and development in the space materials processing area are realized, and one or more processes are found suitable for long-term production, then elements of the infrastructure that would be devoted to such production, such as platforms co-orbiting near any central complex, could be singled out for early, specific, sophisticated-machine R&D focus.
4. Conceptually, space infrastructure could be designed either to include a human work crew or to depend on unattended sophisticated machines. Despite the fact that the relative efficiency and/or effectiveness of these two quite different approaches have been **extensively debated for years, no consensus has emerged.** This absence of consensus results from a number of factors: the state-of-the-art for sophisticated machines; the amount of experience we have had to date in the actual conduct of space support operations is quite small; and, in such operations, NASA has placed more emphasis on human beings than on machines;

For the foreseeable future, therefore, only a general continuum of conclusions can be outlined:

- machines generally will be unable to anticipate and deal with genuinely unknown circumstances and surprises;
- people will need the assistance of machines to gain speed, strength, and memory; to improve their sensory capabilities and their mobility; and to provide them with artificial senses via radar, lidar, radiation detection, etc.;
- machines employed for ongoing R&D and commercial-industrial operations will require human oversight and assistance; and
- machines, maintained by people or not, as circumstances suggest," should do all hazardous and very-long-term repetitive work.

5. **In the matter of relative cost of automated and space facilities including people, the expense of developing and providing safe, sanitary, and suitable living and working facilities for human beings has to be weighed against the costs of providing analogous automated capabilities. The former will certainly be relatively expensive; the latter may well cost more than some advocates imagine, especially if as much capability is expected of the machines as of a professional human work crew. With respect to doing useful work in space, human beings represent in-hand technology. Cost alone does not provide sufficient ground for choosing between automated and manned facilities.**
6. **However, there are three reasons advanced for having men and women in space, only one of which is to do useful work. The other reasons are: to serve as subjects for scientific study and to engage in any other kind of human activity. With respect to the second and third reasons, the question of humans or machines does not even arise.** Only the purpose of doing useful work has been extensively studied and, as indicated in the preceding points, no clear and gen-

eral present advantage for having people or sophisticated machines there has emerged. If the Nation decides, as a matter of policy, to have some of its people remain away from Earth for long periods, then staffed space facilities, allowing for the study of human physiology, psychology, and social behavior, must be acquired. If, similarly, the Nation decides, as a matter of policy, to enable people to pursue in space a variety of cultural activities other than work then, again, only their presence there will suffice.

ALTERNATIVE FUNDING RATES

Chapters 5 and 6 discuss a space infrastructure acquisition program that would involve an initial decision on the purposes of, and the objectives to be achieved in, the civilian space area, followed by the design of that infrastructure with appropriate functional capabilities to support the attainment of these objectives. An estimate of the cost and schedule associated with the attainment of these objectives, along with the acquisition of such infrastructure, is also presented.

An alternative approach could simply establish annual expenditure levels for in-space infrastructure acquisition. Thus, to provide an independent basis of comparison with the civilian "space station" program now favored by NASA, OTA has estimated what new space capabilities could be acquired, by when, if various annual average Government funding rates were established to do so. No changes to present NASA acquisition procedures or NASA anticipated acquisition costs are assumed. Arbitrary annual average funding levels of $0,1, $0.3, $1, and $3 billion per year (1984$) were chosen to illustrate the number and kind of space infrastructure elements that could be acquired over periods of 5, 10, or 15 years.

The results of these 12 funding scenarios are given in table 8, which shows the funding rate, number of years, total expenditure, and kinds of infrastructure elements acquired. The elements are divided into those that can operate independently (e. g., the Shuttle Orbiter and a "space station" central base) and those that depend on being serviced or maintained from one of the independent elements (i.e., by an orbital maneuvering vehicle (OMV), a local in-space transportation system operated from a "space station" control element, or directly by the Shuttle).

Table 8 lists the following (among other) elements of space infrastructure that could be acquired over various acquisition intervals:

- For $0.1 billion per year: probably no "permanently manned" facility could be obtained even by the year 2000. Further extension of capabilities of the Shuttle system and unpressurized platform developments could be obtained. The acquisitions could be: a development of the EDO Phase 1, for 20-day orbit stays, over a 5-year period; or EDO Phase 11, for 50-day orbit stays, over 10 years or longer, plus two or three free-flying unpressurized platforms such as EURECA, LEASECRAFT, and/or the Space Industries' platform (assuming that the Government would make an outright purchase of such platforms).
- At $0.3 billion per year: within 5 years, the acquisitions could be an EDO I I plus several (perhaps pressurized) platforms. Over 10 years, there could be acquired: 1) the first permanently orbiting, Spacelab-derived habitable modules in 28.5° orbit that could support three people, 2) an OMV (enabling servicing of nearby satellites), and 3) a few free-flying platforms. In 15 years, there could be obtained either: 1) two free-flying Spacelabs, one in polar orbit, one at 28.5°, or 2) much more capable permanent infrastructure at 28.5° than that which could be acquired in 10 years.
- For $1 billion per year: within 5 years, there could be acquired: 1) a permanent LEO facility operating as a transportation node (obtained as a new design by NASA), 2) an OMV, 3) an ROTV capable of transporting spacecraft to and from geostationary and

Box H.—The Self-Replicating Machine: A Route to the Solar System

by Dr. Robert Frosch,* Vice President, General Motors Corp.

Humans are gradually making problems for the environmental systems of the Earth that are the support systems of all forms of life. It seems a poor idea to continue to do so without considering the possibility of adding some redundancy to our basic life support systems. The Earth has only a tiny fraction of the energy, materials, and places available in the solar system, albeit the only fraction on which we now know how to live in a self-sustaining way. We need to give serious consideration to building toward the possibility of economically sustained life off the Earth, elsewhere in the solar system. For if we can mine and manufacture elsewhere, we may really be able to reduce demands on the Earth in a meaningful ecological way.

To do so economically implies doing so without continuous mass export from the Earth of the principal energy and material required by people located elsewhere and engaged in these industrial activities. A large initial investment might be required to get started, but, once started, the remote activities should be self-sustaining, even capable of returning a surplus to Earth in repayment of the initial investment, or in trade for things brought from the Earth.

There appears to be a technologically sensible route to this end. Furthermore, the route emerges naturally from current technological development trends. It appears feasible to develop self-replicating, or nearly self-replicating, factories fueled by solar energy. Such a factory could mine the extraterrestrial (e.g., lunar) material under it or next to it, beneficiate the material, perform the necessary physical and chemical processes to provide the desired materials, and make and assemble the parts for another factory identical to itself, including the necessary solar energy plants. The new factory would proceed to do the same, the result being a machine pseudo-biology, with factories growing in numbers at an exponential rate.

Given real physical processes and real efficiencies (and an efficiency discount of 100X just for caution), the time required for a solar cell to collect enough energy to make another solar cell in this fashion appears to be on the order of several days. Thus the replication time is sufficiently short that—starting with one machine and assuming that there are no accidents, no catastrophic wear, and no hardware or software "mutation"—more than a million machines could be provided in twenty years, turning out desired materials and/or devices, and using up about one hundred square kilometers of surface area several meters deep per year in doing so.

A machine versatile enough to replicate itself is clearly [illegible] factory. A number of such machines, "living" on solar energy and local materials, would [illegible] general-purpose industrial base—a base for whatever the human race cares to do in the solar system where such local materials are available in sufficient density.

Even if the factories are not quite self-replicating, it is clear that the required human resources are few; the first factory or two could clearly support the [illegible] of any necessary resources from Earth with energy, materials, or minerals. The [illegible] are not violated: the energy comes from a hot source, the Sun, and waste [illegible] reservoir, the local surface and space. Great "intelligence" is not required [illegible] might be convenient: apparently, most self-reproducing molecular [illegible] intelligent."

The initial investment is large, perhaps [illegible] current federal deficit, but it would be made over a number of years [illegible] and obvious bound. The technology of robotics, computers, and [illegible] on Earth; why not elsewhere in the solar system?

Appropriate use of [illegible] do such things in low g and high vacuum. It may be the least expensive place to tinker with the necessary technological developments in a realistic laboratory setting where the normal kinds of laboratory learning are possible.

*Dr. Frosch was Administrator of NASA from 1977 to 1980.

Table 8.—Some Illustrative Space Infrastructure Acquisitions Possible at Various Annual Average Federal Funding Rates (all amounts in billions of 1984 dollars)

			Space acquisitions[a]				
				Dependent elements			
Funding rate	Number of years	Total expenditures	Independent infrastructure elements[b]	Unpressurized platforms	Pressurized platform#	Space-based transport vehicles	Beyond geostationary orbit spacecraft elements
0.1[e]	5	0.5	EDO I[f] (20 days, 5 crew)	2	—	—	—
	10	1	EDO II (50 days, 6 crew)	3	—	—	—
	15	1.5	EDO II (50 days, 6 crew)	3	1	—	—
0.3	5	1.5	EDO II (50 days, 6 crew)	3	1	—	—
	10	3	Free-flying Spacelab modules[d] (permanent, 3 crew)	1	1	OMV	—
	15	4.5	2 free-flying Spacelab modules in both 28 degree and polar orbits (3 crew each	2	1	OMV	
	5	5	Space transportation center (4 crew)	—	—	OMV; ROTV	—
	10	10	NASA initial operating capability "space station"[g] (8 crew)	2	1	OMV; ROTV	—
	15	15	NASA growth "space station"[g] (12 crew)	3	1	OMV;ROTV	—
	5	15	NASA growth "space station"g (12 crew)	3	1	OMV; ROTV	—
	10	30	NASA mature "space station"g (16 crew) Shuttle-Derived Cargo Vehicle (SDV)	3	2	OMV:ROTV	Lunar capable ROTV; staffed Lunar facility
	15	45	NASA mature "space station"g (18 crew, SDV)	5	3	OMV: ROTV	Lunar capable ROTV; staffed Lunar facility; Mars voyage[h]

[a] Tables 1 and 2 present characteristics and capabilities of infrastructure elements in detail.
[b] Extended Duration Orbiters (EDO) are limited in their stays on orbit; other independent elements are long-term.
[c] Platforms of the LEASECRAFT/EURECA type.
[d] Platforms of the modified free-flying Spacelab/Space Industries type with their own electrical power and pressurization systems.
[e] At $0.1 billion&r, no long-term, staffed infrastructure elements are possible.
[f] EDO I (Extended Duration Orbiter, Phase I) and the Spacelab modules have limited electrical power (about 7 kW).
[g] The NASA "'space station" elements are expected to operate as transportation and servicing centers as well as laboratories. They would have sufficient power for extensive materials processing.
[h] A significant part of the cost of a human visit to Mars could be provided in this case.

other higher orbits, and 4) the capability to support the kind of vehicles that could be developed later to travel to and from the Moon. In 10 years, the IOC infrastructure now favored by NASA could be acquired. In 15 years, nearly all of the infrastructure now seriously considered by NASA could be acquired.

- At $3 billion per year (assuming that only funds, not technology or other factors, would be the pacing program factor): NASA's fully developed "space station" could become available in somewhat more than 5 years. In 10 years, this infrastructure plus a geostationary platform, plus a Shuttle-derived cargo vehicle (SDV) for lower cost transfer of fuel and cargo to LEO, plus a lunar facility ready for occupancy and continuing operation would become possible. In 15 years, NASA's complete infrastructure aspirations and a lunar settlement could be in hand and, perhaps also, plans for seeing a human crew travel to the vicinity of Mars and back could be well advanced.

These projections are for infrastructure acquisition only; operational costs are not included. In general, more extensive infrastructure would require larger operational costs. Also, there is a basic difference between the costs associated with using Shuttle-type vehicles and permanently orbiting facilities. The use of an EDO to conduct extended science or development activities with a crew would involve launch costs each time it went into orbit; use of a permanent facility would require resupply loads several times per year, but the cost of each flight could be shared with other payloads. For example, if 12 dedicated 30-day EDO flights were conducted per year about $1 billion (1984$) in annual transportation costs would be involved; in comparison, cost of four partial-load Shuttle launches per year to resupply a permanent facility would total $100 million to $400 million (1984$), depending on the weight of supplies carried in each flight.

CONCLUSIONS

The general conclusion of a great deal of study by the civilian space community (Government, industry, and university) is that some additional long-term in-space LEO infrastructure could be used to improve the efficiency and effectiveness of a number of present and anticipated space activities. However, our space experience to date, and science, engineering, and space operations considerations alone, are not now sufficient, by themselves, to determine the character and amount of the in-space infrastructure to be acquired soon. And in the absence of any objective external demand for its prompt acquisition, these considerations cannot determine the rate at which it should be acquired.

There are a wide variety of infrastructure options that could be chosen from to provide various kinds and amounts of in-space support assets and services. Some infrastructure options currently exist, others could be developed using **current technology, and some would require new technology. The cost to the Government of acquiring this infrastructure could be reduced, substantially, if our private** sector were to offer to provide lower unit cost portions thereof, and other portions were provided by other countries in collaborative programs within the United States.

it is clear that a number of important support assets and services could be provided with infrastructure other than that defined as "The NASA Space Station." Therefore, in considering how much of what kind of in-space infrastructure should be provided by when, reasonable ways for Congress to proceed might be:

- to select those specific support assets and services that they judge to be important, ask NASA to price them, and specify a date by which they should become available; or
- to set an annual average funding rate for the acquisition of in-space infrastructure, and allow NASA to select the assets and services to be provided and the dates of their acquisition.

And Congress could decide to what extent NASA should emphasize the acquisition of any infrastructure by our private sector and by other countries in order either to relieve the burden on the Government's budget generally, or to increase the amount, or hasten the time, by which space infrastructure would be acquired and/or other space activities were conducted.[6]

Using the first approach, Congress initially might select functions similar to those provided by the Soviet Salyut 7 (operational since 1982). Such a semi-permanent LEO laboratory could be developed using Spacelab-like modules connected to a power and support module patterned after current platform designs. It would support several crewmembers and one-third of the science, commercial, and technology development activities that NASA now suggests would be handled by their IOC. NASA's estimate is some $2 billion (1984$) for such a development.

Or, in another example, the conduct of ROTV operations might be selected as one of the main support functions to be supplied by space infrastructure. This would allow servicing and other activities in virtually all orbits, including polar, geostationary, and even lunar. In addition, such infrastructure would support the continued exploration of the solar system, which is one of NASA's most important "char ters." The cost for an ROTV and its associated LEO infrastructure has been estimated at $3 billion to $4 billion (1984$).

Of course, another example of the first approach would have Congress simply select the IOC assets and services identified by NASA and the aerospace industry that are estimated to cost $8 billion (1984$) (plus the cost of NASA staff); or even to spur the infrastructure acquisition process beyond NASA's present aspirations, and begin to move people beyond LEO.

Congress could consider alternative ways of providing those assets and services in varying degrees. For instance:

- an on-orbit **laboratory supporting research on a wide range of life, materials, and other science topics, and new technology devel-**

'A conceptual possibility would be for NASA to provide a core facility to which private industry could attach docking and fuel storage equipment for commercial ROTV operations.

opments (Shuttle, EDO, Spacelab, Columbus, NASA minimum cost "space station," Space Industries platform);
- permanent observatories for astronomy, and Earth remote sensing (Shuttle, EDO, Spacelab, Space Industries, SPAS, MESA, EURECA, Landsat, LEASECRAFT, Space Telescope, IRAS, 0S0 satellites, Solar Max, and other existing or planned observatories);
- a facility for microgravity **materials processing** including the manufacturing of such products as pharmaceuticals, semiconductors, glasses, and metals (Shuttle, EDO, Spacelab, LEASECRAFT, the Space Industries platform, SPAS, Columbus, EURECA, MESA);
- **servicing of satellites and platforms, including the maintenance or replacement of components, replenishment of consumables, and exchange of equipment (Shuttle, EDO, ELVs,** as well as OMVs and ROTVs operated from the Shuttle);
- a **transportation node** to assemble, check out, and launch vehicles to geosynchronous and other high orbits, and on interplanetary trips {Shuttle, EDO, Columbus, NASA minimum-cost "space station");
- an **assembly facility for large space structures** such as antennas for advanced satellite communications systems (Shuttle, EDO, Columbus, NASA minimum-cost "space station");
- a **storage depot for spare parts, fuel, and supplies for use as needed by satellites, platforms, vehicles, and people** (ETs, Columbus, LEASECRAFT, the Space Industries platform, NASA minimum-cost "space station"); and
- a **staging base for later, more ambitious** exploration and travel (Columbus, NASA minimum-cost "space station").

If Congress were to select an average annual funding rate, some examples of the approximate kind and amount of infrastructure that could be obtained over a period of some 10 years (in 1984 dollars) are, for instance:

- $0.1 billion per year: an EDO (20-day stay on-orbit) plus some free-flying platforms; or
- $0.3 billion per year: an EDO (50-day stay on-orbit), plus free-flying, pressurized infrastructure supporting several crewmembers, plus some free-flying platforms; or
- $1 billion per year: most of the NASA IOC plus an ROTV; or
- $3 billion per year: all of the NASA IOC, plus its extensions, plus an ROTV, plus a Shuttle-derived cargo vehicle, plus a "geostationary platform, plus an operating lunar settlement program.

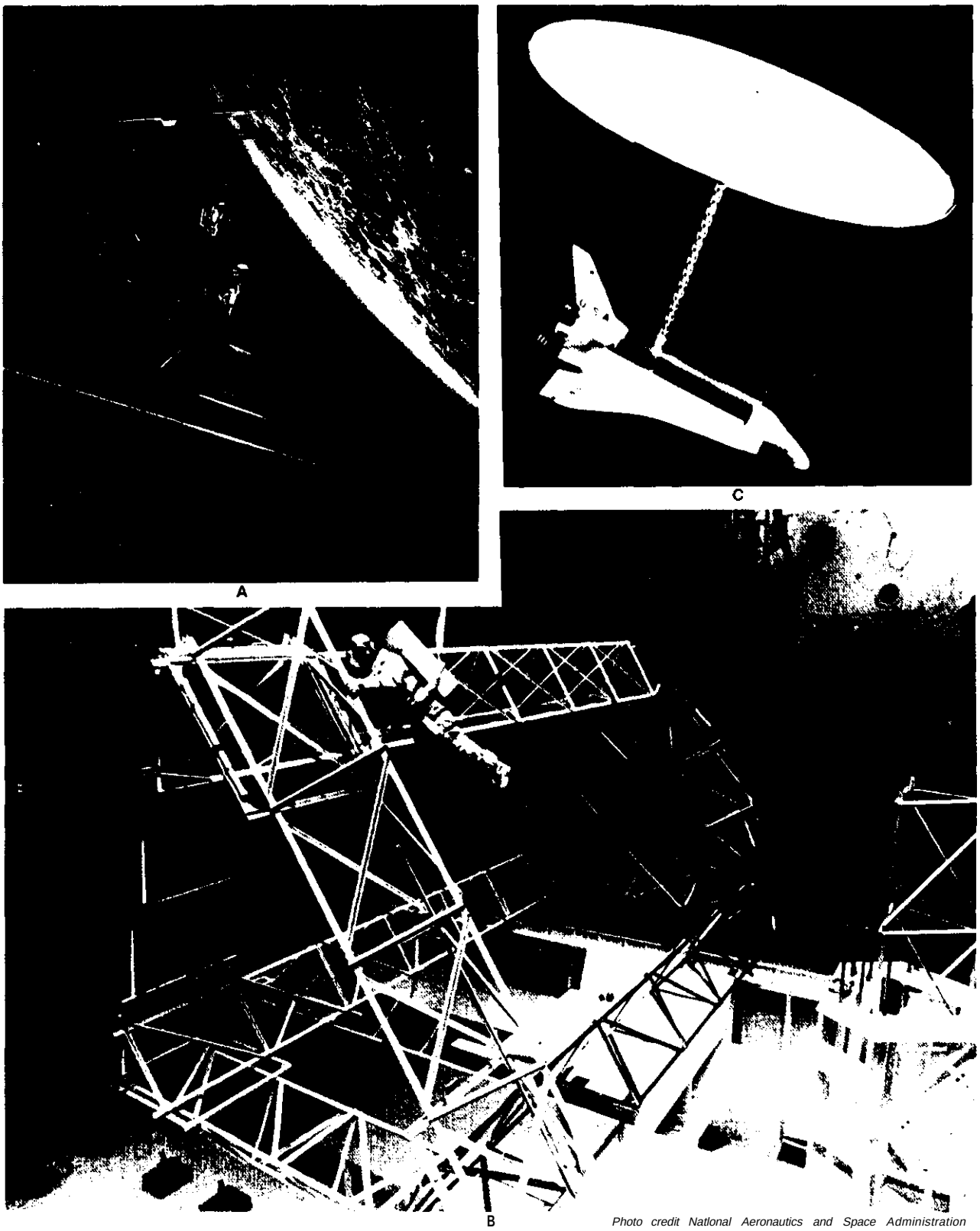

Photo credit Natlonal Aeronautics and Space Administration

One alternative to the development of new technology is to use the Space Shuttle for many advanced operations in low-Earth-orbit. Shown here are: (A) satellite servicing satellite in April 1984; (B) assembly of a large structure in orbit—here simulated in water; and (C) a deployable antenna.

Chapter 5

BROADENING THE DEBATE

Contents

Page

Space Infrastructure as Methods and Means 103

Need for Goals and Objectives 105

The Policy Background 106

Today's Too Narrow Debate 108

Recent Proposals 108

President Reagan's Call for a "Space Station" 109

Steps Toward Broader Participation 110

SPACE INFRASTRUCTURE AS METHODS AND MEANS

Even the most informed ardent supporters of a U.S. civilian "space station" program agree that any such facility would be a means to various ends, rather than an end in itself. The ends proposed may be grouped into four categories: industrial (e.g., manufacturing materials); commercial (e.g., servicing satellites); scientific (e. g., conducting experiments in the life sciences); and national security (e. g., maintaining a permanent U.S. manned presence). These ends, despite their diversity, have in common a presumption that space activities will in future become more routine and more clearly operational, less experimental, and less tentative. This presumption in turn derives from an important change in the way that we are now beginning to view space.

Twenty-five years into the Space Age, we are in a position to view near-Earth space much as we would a vast tract of undeveloped raw land on the Earth's surface:

- We have identified at least **some of the desirable locations (particular** orbits).
- We have established **an initial legal framework** for their beneficial occupancy (the Outer Space Treaty).
- We have **reliable transportation** for people and machinery to and from these remote areas, from selected locations on the Earth's surface (via the Shuttle).
- We can maintain **reliable communications** with these remote areas (via NASA's satellite communications system).

These capabilities are prompting us to undertake the considered development of near-Earth space—with, therefore, the long-term implications for use and support of any assets and people placed there.

indeed, the terms "space station" or "space transportation node" are most accurately understood as identifying elements of long-term, perhaps permanent, space infrastructure, concentrated initially, for the most part, in low-Earth orbits. These elements would provide in-space structure, electrical power, thermal control, warehousing, stability (as to location, attitude, and temperature), communications, fuel, associated docking and air lock capabilities, local transportation, LEO-GEO transportation, and, if staffed by men and women, life support and residential and working space, Because it is expected to be sophisticated, and useful for periods of several decades, this space infrastructure could provide a new and qualitatively different regime of space assets, allow the provision of new space services, and support the conduct of space activities in a new and presumably more efficient and effective manner.

Four major decisions have marked the U.S. civilian space program: the establishment of NASA in the National Aeronautics and Space Act of 1958, the initiation of the Apollo program in 1961, the establishment of COMSAT in the Comsat Act of 1962, and the initiation of the Shuttle program in 1972. But, despite the growing importance of the Nation's publicly supported space activities, the pattern of decision making over the past 20 years has seldom proceeded in the light of broad public discussion. Until very recently, the discussion of whether to undertake a "space station" program and, if so, what elements it should contain, had also been confined principally to engineers and scientists within NASA, and within NASA-supported university programs and aerospace contracting firms. Consideration of the views and interests of these communities has, to a very great extent, determined the kind of "space station" program now suggested by NASA.

As NASA's Shuttle development program comes to a close, thousands of its in-house engineers and technical support staff and, in principle, as much as $2 billion per year in contract funds, u rider its present "budget envelope, " would be freed up to be applied to one or more new programs. Given the agency's natural desire not only to maintain its current size (a size NASA leaders judge to have the support of the general public),

but to grow at 1 percent per year[1]–a desire supported by the Reagan Administration–this combination of people and funds that could soon become available suggests, strongly, that any new programs must include the development and acquisition of a great deal of new technology, preferably related to having people in space; large numbers of technologists would be gainfully employed both in NASA and in the space industry under contract to NASA. NASA's plans could well have been further influenced by the fundamental political belief that the agency might not long survive in its present form without a single, large, "people-in-space" program upon which a majority of its energies are focused. If a number of smaller programs were initiated instead, each of them, it is thought, could be terminated without widespread objections arising in the political process. Finally, NASA may have thought it prudent to propose a "space station" program rather than some other large endeavor(s) (e.g., a return of Americans to the Moon, sending people on an expedition to Mars, etc.) both because the former had been carefully studied over the years, representing, in NASA's view, a natural complement to the Shuttle, and because alternative large programs seemed too grandiose, have not recently been discussed with the general public, and, therefore, were less likely to enlist the required support, both within and without the administration.

Once the decision had been made to begin defining a "space station" program to be proposed for congressional approval, NASA began canvassing possible user communities to learn what characteristics they would like it to incorporate in order to meet their needs. This process would ensure that the actual infrastructure, when built, served as many constituencies as possible, and also might moderate potential opposition from groups who might view any large project as a threat to the budgets of their relatively smaller activities.

The groups canvassed included the various NASA Centers, the National Research Council (the Space Science Board and the Space Applications Board), the space industry, various potential foreign providers and users of space technology (the European Space Agency, Canada, and Japan), and, in general, any groups that had worked on previous "space station" studies. The essential form of NASA's questions to these various groups was: *if* there were a permanent and permanently staffed "space station, " what activities might it reasonably support, how would these activities influence its design, and of what value would those support activities be? Eight aerospace groups, placed under contract to NASA in the fall of 1982, undertook parallel "mission analysis studies"[2] in order to determine a set of activities for the first 10 years of the "space station's" operation, the fundamental characteristics suitable for accomplishing these activities, and the presumed value to be associated with obtaining and using them. These contractor groups soon formed similar judgments regarding the amount of money that (NASA hoped) would be made available, a desirable acquisition schedule, and NASA's preferences on such matters as the employment of people in space and the use of new v. already space-qualified technology. Also, using standard industry cost estimating practices, they suggested the likely acquisition costs of the infrastructure elements to the Government,

The process by which users were canvassed was essentially open-ended: no potential use that either required or would materially benefit from a "permanently manned space station" was rejected out of hand. Given NASA's internal circumstances, this open-ended character was certainly unexceptionable: the more—and the more varied—the identified uses, the more capable, sophisticated, and large the supporting infrastruc-

[1] NASA management has a strong commitment to its own institutional future. NASA Headquarters material, NASA HQ MF 83-2275(1), prepared for a presentation to its internal Policy Review Committee in mid-1983, and subsequently presented to a Board of the National Research Council, lists eight "Agency Goals. " The first goal is: "Provide for our people a creative environment and the best of facilities, support services, and management support so they can perform with excellence NASA research, development, mission, and operational responsibilities. "

The second goal speaks to the space transportation system (the Shuttle), and the third to the establishment of a permanent manned presence in space.

App. B shows that, in previous years, this commitment has also been strong.

[2] The resu Its of these studies are summarized in app. A.

ture would have to be. The greater the resulting capability and sophistication, the more engineers would be required to design, develop, and produce it–and the greater its cost. Increased costs, in turn, would imply more Government contracting—and understandably generate greater interest in and support for the program by the space industry.

In general, the greater the number of potential users and potential suppliers, the greater the influence that could be brought to bear on Government decision makers to approve any "space station" program. In any event, essentially all important space industry groups were represented in the eight aerospace groups of companies, and the number of potential uses recommended for inclusion totaled well over 100.

If there were any important potential uses left out of account, either because the supporting technology would be too costly or could not be obtained in time, or because NASA judged their discussion to be inappropriate for the time being, they could still be provided for later, not in the initial operational capability (IOC) "station," but in the subsequent full capability "space station" program, which could continue to the end of this century.

it is important to appreciate that the form in which NASA put its original questions to the eight aerospace groups largely determined the approach taken to potential acquisition of a civilian "space station." And this approach, in turn, largely determined the result—a "Christmas-tree" proposal in which there was something for all identifiable potential users, with little attempt either to weigh the seriousness of their intentions to use the facility, or to gauge their willingness to see funds that they would employ otherwise used instead to develop it. A different, and perhaps more appropriate question, would have been: in view of the maturing capabilities and increasing numbers of the spacefaring nations of the world,[3] what elements of long-term, in-orbit infrastructure would be appropriate to facilitate the considered development of near-Earth space? This question would not have required initial assumptions that the facilities would be permanent and permanently manned, that the size of the eventual program would have to be geared to maintaining NASA's size and form, and that all possible users should be accommodated.

But even with the large number of uses that were identified, little doubt remains that the kind of "space station" which NASA prefers cannot now be fully justified on scientific, economic, or military grounds,[4] or combinations thereof. Rather, a decision to approve it will rest, finally, on a political judgment that will reflect many intangible factors as well.

[3] Ideally, one should add: " and in view of the goals and objectives of our civilian space program. " However, as argued throughout this report, there is no publicly accepted agenda of such goals and objectives,

[4] It must also be noted that, since the cancellation of the Manned Orbiting Laboratory Program in 1968, the U.S. military has been consistent in its public position that there is no military requirement for a "manned space station. " This position is still publicly maintained and remains in force, even in the context of the President's call, in March 1983, for development of advanced ballistic missile defense systems that could see large amounts of very sophisticated and costly military technology deployed in space.

NEED FOR GOALS AND OBJECTIVES

This entire panoply of relatively narrowly focused and nearer term ends provide, in OTA's judgment, insufficient justification for a major, new U.S. civilian space effort. Moreover, there is general agreement neither on a set of long-range goals which the U.S. civilian space program now is expected to achieve nor on a set of specific objectives which, as they are addressed, would serve as milestones of progress toward those goals. And without such a set of goals and objectives the Nation cannot make a clear determination of the basic characteristics of the infrastructure elements actually needed, of their acquisition schedule and cost, or of the means whereby they should be acquired.

If future U.S. space-related goals and objectives are to be effective in providing direction to future U.S. space efforts, they should be such as to command widespread attention; have great inherent humanitarian and scientific interest; foster the development of new technology; have relevance

to global issues; prompt international cooperation; and involve major participation of our private sector so as to advance our economic prospects.

THE POLICY BACKGROUND

The overall end of U.S. space activities was first stated as a preamble to the National Aeronautics and Space (NAS) Act of 1958, as amended (sec. 102 (a)): "The congress hereby declares that it is the policy of the United States that activities in space should be devoted to peaceful purposes for the benefit of all mankind." Six policy principles, forming the core of the NAS Act, give substance to that overall end. These six have provided the framework in accordance with which the civilian space program has evolved to the present day. These principles may be stated as follows:

- that U.S. preeminence in space science, exploration and applications be maintained;
- that economic, political, and social benefits be derived;
- that knowledge be increased;
- that civilian and military activities be separated (though they are to be coordinated and are not to duplicate one another unnecessarily);
- that NASA, the civilian agency, be limited largely to research; and
- that international cooperation be fostered.

Thus, the NAS Act articulated the policy principles for overall guidance of the U.S. civilian space program, but the act alone has not provided (and cannot be expected to provide) the particular goals for civilian space activities. Lacking such guidance, the space program has instead been directed by political and budgetary pressures not always relevant to a logically ordered exploration, development, and use of space. At the same time, none of the policymaking bodies successively established in the executive branch nor any of the committees of Congress have been able to ensure that a long-range plan of particular policies and programs would be pursued. s

Over the years, a number of specific goals and objectives have been proposed. Significantly, however, none of them has arisen as a result of widespread public discussion. With the maturity of U.S. space capabilities (and the capabilities of several other countries and our own private sector as well) on the one hand and the straitened financial circumstances of the Government on the other, this situation is in need of fundamental change. That is, if the United States is to maintain a strong commitment to a continuing civilian space program, then an informed national agreement on the goals and objectives of such a program is most important.

At the beginning of the Nixon Administration, the Apollo program was rapidly coming to a successful close, but no clear definition of a post-Apollo space program had emerged. Early planning efforts had failed to yield a consensus, and space program budgets had decreased dramatically, presenting the new administration with growing unemployment in the aerospace industry as well as a major technological agency that did not have clear signals regarding its future. In order to address these problems, the Presidential Space Task Group (STG) was established under the chairmanship of the Vice President. The STG review was the first comprehensive interagency planning effort that was carried out with respect to the civilian space program.

In its final report,[6] the STG recommended commitment to a balanced publicly funded program that included science, applications, and technology-development objectives, but no immediate commitment to expeditions to the planets. They suggested no change in the institutional structure nor an operations role for NASA, but did emphasize the desirability of expanding international cooperation. The major technological development that the STG suggested was the reusable

[5] For a full discussion of these policy principles and their implications, see *Civilian Space Policy and Applications,* **OTA-STI-177 (Washington, DC: U.S. Congress, Office of Technology Assessment, June 1982).**

[6] *The Post-Apollo Space Program: Directions for the Future,* **Space Task Group Report to the President, September 1969.**

space Shuttle system that could support an eventual "space station. " The clear priority was for Shuttle development first, with a "space station" as a potential future development. Support for exploratory expeditions to the planets was retained as a long-range option for the Government's civilian space program, with a "manned Mars mission before the end of this century as a first target. "

In 1976, almost two decades after the adoption of the NAS Act, NASA issued its own "Outlook for Space" report. This document addressed the cultural goal of better scientific understanding of the physical universe and the social/economic goal of further exploration and exploitation of the solar system, The report suggests four goals reflective of basic human physical needs:

1. improving food production and distribution;
2. developing new energy sources;
3. meeting new challenges to the environment; and
4. predicting and dealing with natural and man-made disasters.

In October 1978, President Carter released a space policy statement that summarized the important aspects of an administration review of space policy and provided guidance regarding the President's view of national objectives in the publicly supported civilian space program over the next several years. This statement reaffirmed endorsement of a balanced space program and committed the administration to the continued development of the space Shuttle system and its use during the coming decade. However, the statement made no new program commitments and specifically rejected any major new technological development. No goals were set to provide a focus for the program and the general philosophy was best characterized by the statement that "activities will be pursued in space when it appears that national objectives can most efficiently be met through space activities. " Overall, the policy statement left many questions unanswered. It made several statements about what the United States *would not* do in space, but remained very general regarding the nature of what it *would* do. In addition, it became clear that fiscal constraints were likely to continue, and, as a consequence, commitments to specific multiyear Government programs would be made *only* with great care. This announcement was received with some dismay by the congressional leaders involved with the space program and by the aerospace community. This concern spawned a number of hearings and proposed legislative approaches to a more vigorous space policy for the United States, and led to the request for the OTA assessment of *Civilian Space Policy and Applications.*

Then on July 4, 1982, President Reagan announced the issuance of his National Space Policy Statement ". . . to provide a general direction for our future [space] efforts . . .," asserting that " . . . our goals for space are ambitious, yet achievable. " This statement ". . . establishes the basic goals of United States policy which are to:

1. strengthen the security of the United States;
2. maintain U.S. space leadership;
3. obtain economic and scientific benefits through the exploitation of space;
4. expand U.S. private sector investment and involvement in civil space and space-related activities;
5. promote international cooperative activities in the national interest; and
6. cooperate with other nations in maintaining the freedom of space for activities which enhance the security and welfare of man kind."

On June 27, 1983, the Science Advisor to the President ". . . challenged] the aerospace community to do some bold thinking about the future [concerning space]," and went on to observe that " . . . the real issue is how we can fashion a space program that addresses today's national aspirations and needs . . . and . . . re-ignite[s] the spirit of adventure that captured America in the past . . . . " He questioned ". . . why don't we let the American people share the grand vision of the future of space?"

But the articulated goals, particularly in the absence of specific objectives designed to address them, fall well short of what the United States, today, might expect of its publicly supported civilian space activities.

They do not speak at all of such fundamental matters as having human beings in space; of hav-

ing the general public directly involved in space-related matters; or of ameliorating the great inhibition that the present cost of space assets and **activities has on the development and use of** space. And there **is little in these words to sug-**gest the imaginative, the exciting, the challenging or the adventurous **or, to use the Science Advisor's word: the "bold. "**

Finally, behind all of this there are the growing accomplishments, competence, and independence of the Western European countries and Canada, Japan, Brazil, the People's Republic of China, india, and others, as well as the large and constantly expanding U.S.S.R, space program that, in its nonmilitary aspects, commands the attention and respect of our civilian space leaders.[7]

[7]See *Salyut—Soviet Steps Toward Permanent Human Presence in Space—A Technical Memorandum,* **OTA-TM-STI-14 (Washington, DC: U.S. Congress, Office of Technology Assessment,** December **1983).**

TODAY'S TOO NARROW DEBATE

As the important matter of defining and articulating such national goals and objectives is addressed, it should not be taken as implied here that such definition and articulation are not now going on. What should be understood is that, for all practical purposes (including that of obtaining any civilian "space station"), this activity is being conducted by space-related scientists, engineers, and program managers—almost all within the Government, within university offices supported by the Government, or within the Government-supported aerospace industry, At best, then, the goals and objectives that would be expected to result from this kind of consideration might, understandably, represent viewpoints that are narrow relative to the wide spectrum of our national interests and opportunities in the civilian space area today. It is likely that an expression of goals, and especially specific objectives, arrived at in this fashion will reflect, perhaps unduly, the interests of their originators. And finally, the U.S. political system oftentimes places as much weight on the process by which a national decision is reached as on the substance of this decision; therefore, the better course for the Government in the longer run is to encourage as many of our citizens who are interested in space to participate in the pre-decision debate.

It was quite appropriate that, for most of the past quarter of a century, our national space goals and objectives primarily reflected those of the science and technology communities alone. These communities have done their work well. Consequently, our space activities now can, and should, be broadened to reflect both the maturity of our space knowledge and skills, and the general public's broader interests and concerns.

The matter of describing a new and clarified set of long-term civilian space goals, and laying out specific civilian space activity objectives, is made more urgent by the recent increase of military interest in space—an increase that may well soon accelerate.

RECENT PROPOSALS

Recently, there have been a number of calls to formulate a set of broadly based, contemporary national goals and objectives in the civilian space area.

For instance, Simon Ramo observes in his new book *What's Wrong With Our Technological Society and How to Fix /t* (pp. 175-1 76):

> After twenty-five years it is still true of the entire commercial use of space in the united States **that the government and the private sector have not yet worked out their best permanent roles. Less forgivable is something else. With space so clearly an arena** of powerful economic and [national] security interest for the nation, we have been approaching plans and policies about space for well over a decade on an intermittent, t-top-and-jump short-range political basis. NASA has many hopes and plans, of course, but the nation does not have a plan for the next two decades. A real plan would describe both goals and

anticipated budgets. It would have recognition, acceptance, and stature with all the power centers influencing advances and applications in space, namely, the government's Executive Branch, Congress, industry, and the scientific and technological fraternity. A real plan would be one to which all these forces were committed long-term, in the same way that at the start of the 1960s we were committed to landing a man on the moon before the end of the decade. . . . [And while] the possibilities of space warfare [and] economic constraints [must be considered] none of these factors should prevent the United States from having sound long-range space goals as a guide to the government's budgeting process. . . . Less-than-adequate attention has been given to setting priorities and long-range goals and allocating missions to each sector.

In a recent report prepared by the Subcommittee on Space Science and Applications and transmitted to the Committee on Science and Technology of the U.S. House of Representatives, Representative Ronnie Flippo, then Chairman of the Subcommittee, stated that: ". . . there is a lack of long-range goals for our space program."[8] The report noted that 7 years earlier it had also addressed "Future Space Programs" and then emphasized that NASA should ". . . focus on an over-arching concept [that] should represent one or more mind-expanding endeavors which challenge the imagination and capability of the country [the] key element of [which] should be substantial return on past and current investments in space through clear . . . benefits to the society on earth in the form of greatly expanded services and direct contributions to solution of earthbound problems. "[9]

The "NASA Advisory Council Study of the Mission of NASA" (released on Oct. 12, 1983) suggests activities that, in some cases, could be considered goals or objectives: explore the solar system, pursue scientific research in space, exploit space for public and commercial purposes, and expand human presence in space. And NASA awarded a near $1 million contract to a private organization (Ecosystems) to provide it with suggestions on ". . . long-term research goals and the technology it should work on to meet those goals. "

The President's Private-Sector Survey on Cost Control, in commenting on the ". . . Federal expenditure on R&D [of] about $48 billion a year . . . faults the major science agencies for failing to have clearly defined goals and plans for meeting them. "[10] And an editorial in the Christian *Science Monitor* pointedly observes that ". . . it is most important that the U.S. develop a consensus on manned-space-flight goals. None now exists . . . Until consensus exists no specific space station concept can be usefully approved.'" [11]

[8] *Future Space Programs: 1981,* Subcommittee **on Space Science and Applications, Committee on Science and Technology, U.S. House of Representatives, May 1982, p. 1.**

[9] **1 bid., p. 3.**
[10] *Science,* No. 222, Nov. **25,** 1983, **p.** 903.
[11] *The Christian Science Monitor,* **Dec. 12,** *1983,* **p.** 23.

PRESIDENT REAGAN'S CALL FOR A "SPACE STATION"

In 1984, the future of the Nation's activities in space was placed squarely on the congressional agenda. In his State of the Union Address, President Reagan spoke at considerable length about the space area and what he judges should be the Nation's aspirations in regard to it. And he devoted his radio address during the same week to space. He directed NASA to commence the development of permanent, low-Earth-orbit infrastructure that would support human beings in space, and to obtain it within the next decade. And he asked Congress to authorize and appropriate Federal funds to begin studies of this proposed infrastructure.

Of particular relevance here is the president's assertion that: "[one of] our great ***goal[s]*** is to build on America's pioneer spirit and develop our next frontier . . . : space."; "America has always been greatest when we dared to be great. . . . We can follow our dreams to distant stars." And in developing the infrastructure (i. e., a civilian "space station") he called for international participation so

as to: ". . . expand freedom for all who share our ***goals. "***

In his radio talk, he spoke to the: ". . . challenge [of] reaching for exciting goals in space , . . ," while explaining that, as well, "Our space goals will chart a path of progress toward creating a better life for all people" [and he emphasized that]: "a , . . space station [should be seen as] a stepping stone for [addressing] further goals." Emphasis added.

In effect, the President's speeches have now prompted, and indeed his specific request for Federal law and funds for a major new initiative in the publicly funded civilian space program essentially requires, the conduct of a national debate over the next year or two regarding our national interests, goals and objectives in the civilian space area.

STEPS TOWARD BROADER PARTICIPATION

Interestingly enough, the circumstances discussed above have resulted in only one important change to the basic 1958 Act—the explicit emphasis on space commercialization that was added this summer. Indeed, it was only in the fall of 1983 that Congress began to hold hearings that might lay a basis for such changes. Scores of billions of public dollars have been appropriated to pay for our public civilian space program since we reached the Moon, and almost surely scores of billions more will be appropriated during the next few decades, but, to date, without the kind of thoughtful and fundamental reappraisal of our contemporary national interests and activities in space that many are coming to believe the issues now demand. Our publicly supported civilian space area has seemed to suffer from a form of benign neglect.

However, the debate is quickening. Congress has taken an extraordinary step regarding the articulation of national goals and objectives in the civilian space area. In passing the National Aeronautics and Space Act of 1985, Congress, among other things, found and declared that ". . . the identification of long-range goals and policy options for the United States civilian space program through a high-level, representational public forum will assist the President and the Congress in formulating future policies for the . . . program . . . "; and they called for the establishment of a "National Commission on Space" that will assist the United States " . . . to define the long-range needs of the Nation that may be fulfilled through the peaceful uses of outer space "[12]

With the President's signature to Public Law 98-361, there has been put into motion the first formal and fundamental reexamination of the Nation's civilian space aspirations, objectives and institutions since the passage of the NAS Act in 1958.

From the outset of this assessment, the need for identifying a far-sighted set of generally acceptable civilian space goals and objectives that reflect today's circumstances has been apparent. Most notably, the assessment's Advisory Panel has strongly urged that an initial set of such goals and objectives be identified and proposed for broad study and discussion so as to lay a more rational basis for the consideration of any large and costly space civilian "space station. "

In response to that call, and with the intention of providing a sound and useful starting point for a national debate on the scope and direction of the Nation's space activities, the next chapter of this report provides an ensemble of interrelated goals and objectives for consideration by Congress and the American public.

[12]Public Law 98-361, Title II.

Chapter 6

TOWARD A GOAL-ORIENTED CIVILIAN SPACE PROGRAM

Contents

Page

Possible Civilian Space Goals. 113

Possible Civilian Space Objectives 113

Indicated infrastructure 122

Cost and Schedule 124

Conclusions 126

Final Observations 128

LIST OF TABLES

Table No. *Page*

9. Possible Goals and Objectives 115

10. Cost and Schedule to satisfy Objectives Suggested for Discussion 125

Chapter 6

TOWARD A GOAL-ORIENTED CIVILIAN SPACE PROGRAM

POSSIBLE CIVILIAN SPACE GOALS

If the civilian space activities of the United States are to maintain widespread and enthusiastic public support, they should aspire to protect, ease, challenge, and/or improve the human condition. Such aspirations can and should be articulated in the form of long-range goals that would guide the conduct of the Nation's space activities in general and a decision regarding possible acquisition of any "space station" in particular.

In order to prompt the formulation and subsequent discussion of future space goals and objectives, OTA has prepared a list of possible long-range goals and a set of nearer term objectives designed to address those goals. Although OTA does **not** recommend either this particular set of goals or its supporting family of objectives, they are intended to exemplify the **kind of goals and objectives around which consensus might well be formed so as to provide sensible guidance** for the Nation's future space activities. The Advisory Panel for this assessment has taken an unusually active role in helping to formulate these goals and objectives. It is the Panel's judgment that the goals and objectives proposed for discussion are reasonable and important.

The set of possible goals follows. (They should be read with reference to the six basic principles spoken to in the 1958 Space Act and discussed in the previous chapter.) Some of these can be defined in fairly specific terms, but others–no less significant—can be stated only in a more general and open-ended way:

- to increase the efficiency of space activities and reduce their net cost to the general public;
- to involve the general public directly in space activities, both on Earth and in space;
- to derive scientific, economic, social, and political benefits;
- to increase international cooperation and collaboration in and re space;
- ž to study and to explore the Earth, the solar system, and the greater physical universe; and
- to spread life, in a responsible fashion, throughout the solar system. '

These goals (some new, some already well-accepted) have been chosen so as to move U.S. space interests and activities closer to the mainstream of public interest and concern, while at the same time maintaining space leadership, enhancing national security, and developing new capabilities to respond to finding the unexpected in the cosmos.

[1] Undertaking this goal responsibly would entail preserving the pristine environments of other worlds for future study and appreciation. For example, there are bodies such as Europa and Titan, which have not yet been explored, where life may already exist. And there remains some residual controversy even about the possibility of microbes on Mars.

POSSIBLE CIVILIAN SPACE OBJECTIVES

In order to illustrate how the six basic civilian space goals suggested in the previous section could be addressed, this section identifies 10 specific objectives that the United States (in cooperation with other countries, in most cases) could attain within the second quarter-century of the space age. The particular objectives suggested here for further study and discussion are chosen

to have a great impact and, taken as a group, to respond to a broad spectrum of public, private, professional, and international interests.

Of course, discussion of any of these conceptual objectives should actually be undertaken only with surface-based alternative and complementary activities clearly in mind. Some elements of a few are already under way in a modest fashion, but not in the sharply focused fashion suggested here. Some may turn out not to be feasible for technological, economic, or other reasons, Some could be attained in a very short time, but others will take many years. Some respond to objective needs, some respond to conceptual opportunities. Broad consensus on some should be rather easily reached, but others can be expected to provoke serious argument and perhaps even disagreement. They range in cost from near-zero to tens of billions of dollars. Some are chosen particularly because, in addition to the importance of their being achieved, they also invite the active and important partnership of other countries and the U.S. private sector.

These objectives are proposed under the assumption that the U.S. Government would still be expected to carry on, as today, a "core" space-related basic research program at the level of at least $1 billion annually (in constant dollars). Pure scientific research should continue to encompass such diverse space-related areas as astronomy, cosmology, life sciences, materials sciences, geodesy, magnetism, relativity, plasma physics, meteorology, atmospheric composition and dynamics, and programs of preparing for human lunar, asteroid, and planetary exploration and settlement. The basic research program would be expected to continue solar system exploration generally, including the planets, their moons, the Sun, comets and asteroids, and to improve the methods and means of transporting equipment and people in space. And it would be expected to develop, deploy, and use those "cutting edge" space technologies—large and sophisticated telescopes and interferometers that span the electromagnetic spectrum, microgravity furnaces, sophisticated and powerful Earth-oriented remote sensors, sophisticated space probes, etc.—that are required to make early and fundamental advances in these fields in a highly productive fashion.

The results of these basic research activities, of course, will be many and varied. In both the shorter and longer term they can have important public policy implications and, in general, they can eventually influence the cultural, economic, and national security interests of the country in many, and oftentimes unexpected, ways. As the roles and capabilities expected of our in-space infrastructure for the next two or three decades are considered, basic research activities should receive a high priority.[2] Continuing success in fundamental space research may be expected to facilitate the accomplishment of the objectives proposed here.

The titles of the 10 civilian space objectives follow. They are not rank-ordered:

1. Global Disaster Avoidance and Minimization.
2. Human Presence and Activities on the Moon.
3. Exploration of Mars and Some Asteroids.
4. Medical Research of Direct Interest to the General Public.
5. People, Drawn From the General Public, in Space.
6. Modernizing and Expanding International Short-Wave Broadcasting.
7. Providing Space Data Directly to the General Public.
8. Using Space and Space Technology for the Transmission of Electrical Energy.
9. Reducing the Cost of Space Operations, Especially Transportation.
10. Increasing Commercial-Industrial Space Sales.

The eventual acceptance of any or all of these objectives (along with their related costs) as actual national objectives would leave the priority among them, and the rate of public expenditure in addressing them, completely open. Each and all would be undertaken, if at all, only as the funds become available to do so.

Table 9 relates these 10 specific objectives to the broader goals.

A brief elaboration of each of the 10 follows.

[2] See the National Aeronautics and Space Act of 1958 (Public Law 98-361).

Table 9.—Possible Goals and Objectives

	Goals						
	Increase space activities' efficiency; reduce their net cost	Involve the general public directly	Derive economic benefits	Derive scientific, political, and social benefits	Increase inter-national cooperation	Study and explore the physical universe	Bring life to the physical universe
Objectives:							
1. Establish a global information system/service re natural hazards	N	N	P	Y	Y	N	N
2. Establish lower cost reusable transportation service to the Moon and establish human presence there	Y	P	P	Y	Y	Y	Y
3. Use space probes to obtain information re Mars and some asteroids prior to early human exploration	N	N	N	Y	Y	Y	N
4. Conduct medical research of direct interest to the general public	N	N	P	Y	P	N	N
5. Bring at least hundreds of the general public per year into space for short visits	N	Y	Y	Y	Y	N	Y
6. Establish a global, direct, audio broadcasting, common-user system/service	N	P	P	Y	Y	N	N
7. Make essentially all data generated by civilian satellites and spacecraft directly available to the general public	N	Y	P	Y	Y	N	N
8. Exploit radio/optical free space electromagnetic propagation for long-distance energy distribution	N	N	Y	P	Y	N	N
9. Reduce the unit cost of space transportation and space activities[a]	Y	N	Y	Y	N	N	N
10. Increase space-related private sector sales[a]	Y	N	Y	N	N	N	N

[a]This would advance the prospects of successfully addressing all other "goals."

Y: Yes; N: No; P: Perhaps; depends on how carried out.

1. **Global Disaster Avoidance and Minimization.—In cooperation with the other countries of the world, our Government and** our scientific and enginering communities could be set to the task of beginning to provide a global, space-related, Earth-monitoring system/service which would provide fundamental information to the world's political leaders, organizations, and institutions to assist them in dealing, satisfactorily, with macroscopic "life-and-death" problems in such areas as weather, climate, air and water purity, food production, seismology, and resource conservation. It would be designed to complement related surface-based system/services, taking specific advantage of the in-situ measurement and monitoring perspectives that only appropriate sensors located in space could offer. Attention could be concentrated on earthquakes, tsunamis, ozonosphere perturbations, severe storms, environmental pollution, the carbon dioxide "greenhouse" effect, volcanic effluvia, etc. Well before the year 2000 this operational global system/service could be in place, monitoring and studying the Earth's space and atmosphere, and surface and subsurface, for characteristics and changes relevant to such problems, and supplying both immediate and longer term "warning" information promptly, directly, and in a form useful to nontechnicians.

These are problems that have inherent multinational elements of potentially grave hazard. And this type of space-related system/service could be developed, installed, and used in such a fashion as to obviate the serious concerns raised by some countries over what they consider to be undue surveillance of a military-political nature, or the kind of monitoring that could provide an undue economic advantage to some countries. The original elements of this system/service could be continually improved on as new scientific knowledge is obtained, new space-related measurement techniques are perfected, and experience is gained in the reliability, utility, and cost of space-related services in comparison with analogous services that could be provided at the sur-

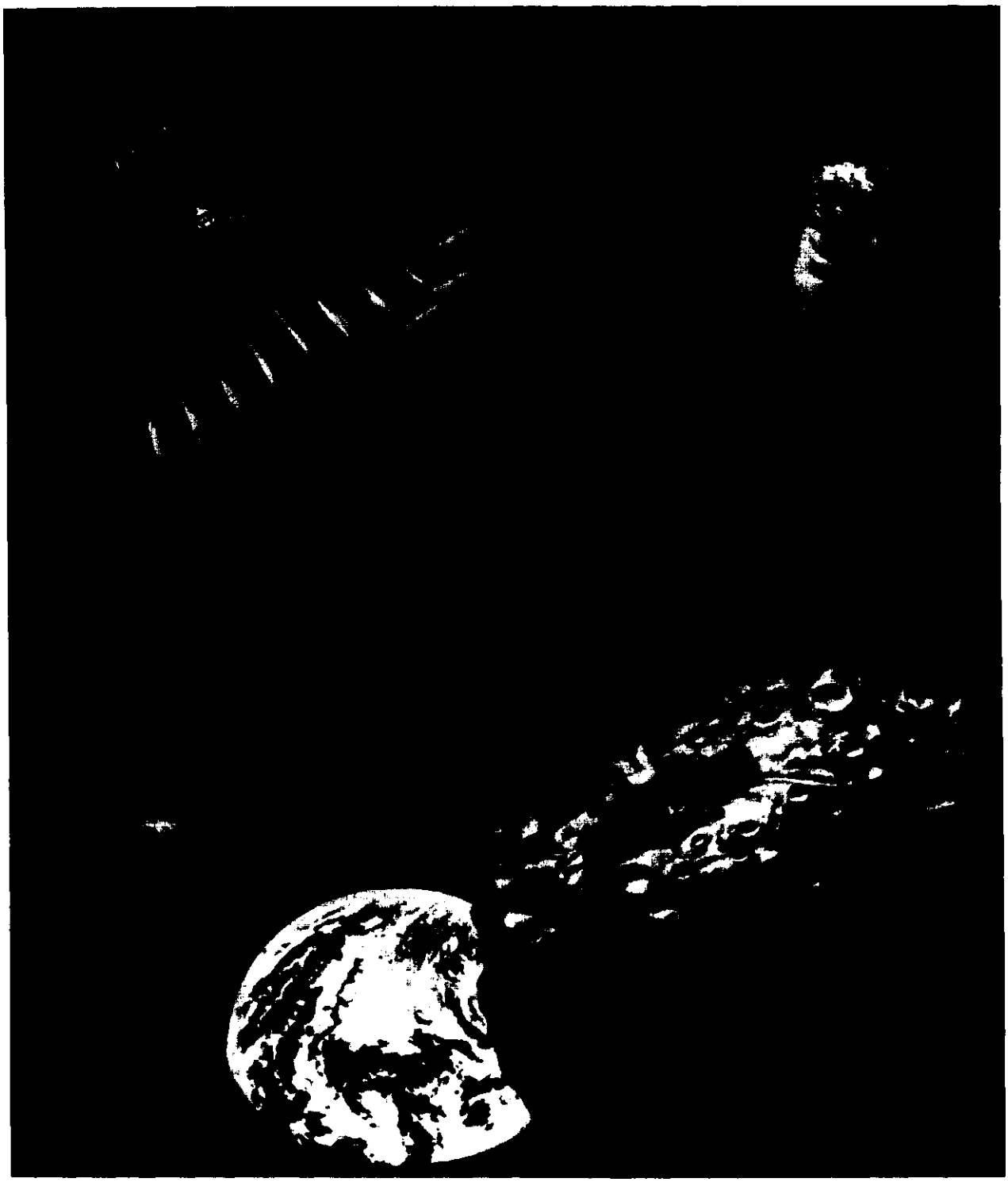

M

N

face. It could, of course, draw heavily on any "global habitability" scientific studies. And it could provide information that would be useful in furthering study of "nuclear winter. "

2. Human Presence and **Activities on the Moon.** –Our Government and our scientific and engineering communities in government, universities, and the private sector, could be given the task of establishing a modest, permanent, habitable facility on our Earth's Moon. Such a facility would allow physical, chemical, geological, and cosmological studies to begin there in earnest–with the entire activity involving as many countries as possible. The U.S. private sector in concert with the Government could also be challenged to provide facilities and services there that would open up the Moon to travel, recreation, sports and other cultural, commercial, and industrial pursuits. Three important elements of this program could be: 1) the development of a relatively low-cost, human transportation system/service between low-Earth-orbit and the Moon [see objective (9)]; 2) consideration of producing oxygen on the Moon from lunar materials as a source of rocket oxidant for return trips and for life support (i. e., using solar energy to release oxygen from Moon rocks); and 3) a search for abundant supplies of water/ice in the cold-traps at the lunar poles.

A primary cost-driver for human settlement on the Moon, and other celestial objects, will be the reliability and efficiency of the technology which would enable such settlements to provide livable atmospheres, grow their own food, and build effective and durable habitats using local materials.

3. Obtaining Information Required for Eventual Human Exploration of Mars and Some Asteroids. —The Soviet Union has stated that it expects to explore, and have some of its people establish a presence on, the planet Mars. The United States could also aspire to do so when the technology is in hand to allow it to be done at relatively low cost, when adequate Mars-related data and information are also in hand, and when our experience in settling on the Moon gives us the confidence that we can do so successfully and efficiently [see objective (2)]. Early programs to develop and use lower cost transportation, housing, and people-related services in establishing low-Earth-orbit and lunar residential and work places could all keep analogous Mars objectives specifically in mind. Over the next 10 to 20 years, crewless space probes, with characteristics specifically reflective of our intention to have some of our men and women visit the surface of Mars early in the next century, could be sent there. Specific plans could see a human exploration program commence on the satisfactory completion of our initial settlement on the Moon, provided the cost of doing so is then seen to be acceptable.

Of course, the space probes could, as well, search for information of importance to a better understanding of our own terrestrial circumstances and processes. And consideration could be given to exploring a few of the asteroids as wel l.

4. **Medical Research of Direct Interest to the General Public.– For over 20 years, the space programs** of both the United States and the Soviet Union have been concerned with the ability of men and women to survive and function well in space. Space provides a special environment, marked particularly by the near absence of gravity, within which several diseases and related human physiological processes might now begin to be profitably investigated. Important topics relevant not only to future space dwellers, but also to the Earth population as well, could include research on hypertension, osteoporosis (a disorder involving loss of bone mass highly prevalent in older women), osteoarthritis (which affects over 16 million Americans), weight control, energy metabolism, digestive function, and body fluid balance.

To elaborate on one such opportunity: experimental evidence, gathered from both animals and humans in space and in certain Earth-based simulations of some of the conditions of space flight, suggests that there may bean analogy between some of the physiological changes that occur in the absence of gravity and those changes which take place during the normal aging process. For example, as cosmonauts and astronauts adapt to longer duration living in essentiaJJy weightless conditions in space, they experience atrophied muscles, brittle bones, and decreased cardiovascular and respiratory capacity, i.e.,

physiological conditions similar to those which accompany senescence. Further experimental studies in research programs carried on at the Earth's surface and on the Shuttle-Spacelab may confirm that, inasmuch as the human aging process evolved under conditions of constant gravity here on Earth, removal of this force over long periods of time in space results in changes in the aging process and its rate—changes that could be studied in weightlessness with an explicit intention of relating any findings to the general population. Given the importance of scientific studies of aging to all of the world's people as individuals, and the effects of an aging population on many economic, social, and political institutions, if surface and Shuttle-Spacelab "space station" studies are encouraging, the United States could inaugurate a major international research program in the fields of gerontology and geriatrics that would encompass related experimentation both in space and on the Earth's surface.

5. **People, Drawn From the General public, in Space.—The Government is now moving to expand human use of the Shuttle to include a very few nontechnician "communicators" per year on Earth-space flights. Within the next decade, we** could have space "Lodge/Habitats" established in low-Earth-orbit, with the Shuttle being used to see hundreds of persons per year, the great majority of whom would be representative of various professional and cultural sectors and the general public (i.e., nonastronauts and nonspace technician workers) drawn from the United States and rest of the entire world's population, being transported there to spend a short time in space. The entire activity could be operated as a sound, albeit innovative, commercial enterprise carried on in cooperation with the U.S. Government; there should be little or no net out-of-pocket cost to the Government as a consequence of this cooperation. The enterprise could be conducted so as not to favor the rich—all of our citizens should have some opportunity to visit there. And such "Lodge/Habitats," and the activities that they, and the Shuttle, could allow to commence in space, could be used to help the world celebrate the next "Millennium" in an extraordinary fashion.

Only when a large number of our citizens, representative of a broad cross-section of our society, begin to experience the "space adventure" directly, will the space domain and space activities gradually begin to move into the mainstream of our national interests and concerns.

~his objective and objective (7) have in common the aim of making the space domain, and space science and technology, much more accessible to the general public.]

6. **Modernizing and Expanding International Short-Wave Broadcasting.–Hundreds of millions of people, world-wide, regularly listen to speech and music programs broadcast via shortwave by more than 100 countries. Because of the inherent characteristics of the ionosphere which influence the way by which the broadcast signals** are propagated, this service is limited at best and oftentimes is of poor quality, reliability, and coverage. Also, shortwave broadcasting has become a matter of growing international political contention because of its dominance by the major countries and the growing interference to reception caused by increasing use of the sharply limited useful radio-wave spectrum by very powerful surface transmitters. A cooperative U.S. Government-private sector initiative could lead an international effort to establish a global system, employing sophisticated and powerful direct broadcast satellites, that could replace most of today's individual country shortwave stations well within a decade. Developed as an international common-user system, use of its services could allow broadcasters throughout the world, regardless of their size, location, or political persuasion, to reach audiences in other countries clearly and reliably, and at relatively modest cost. Such a service could go far toward meeting a standard of nation-to-nation broadcasting equitability simply not physically possible under today's surface-based shortwave broadcasting circumstances. Briefly, it would be a more efficient, effective, and fair way of accomplishing the kind of shortwave broadcasting now done from the Earth's surface. And, as well, the prospect of wholly new kinds of international programming and international marketing services could be opened.

7. **Providing Space Data Directly to the General Public.—''The** wholesale introduction of computers into [the home and especially] into class-

rooms since 1980 **amounts to a quiet revolution that will help meet the demands of scientific and technological** change as well as economic computation **in world markets."[3] Nearly 80 percent** of our junior and senior high schools now have computers and it is expected that the number in our public schools will reach **600,000 by next year. A computer network now interconnects 200 university sites, and the number of terminals is expected to reach 150,000 soon.**

A high school teacher in the United Kingdom has attained international attention by having his students ''tune in" to signals from Soviet spacecraft and deduce information about the crafts' characteristics and activities. The cultural, social, and economic implications of having a large and growing segment of our population using increasingly sophisticated computers in their homes, businesses, grade and high schools, universities, etc., promise to be enormous. Many of these individuals and organizations could now be supplied, in near-real-time and at modest cost, with the nonclassified and nonproprietary data generated by payloads of public satellites and spacecraft generally, by designing them to allow direct readout of the space signals transmitted from them and/or by providing the data promptly and generally from central collection points. For instance, a recent Shuttle/Spacelab flight resulted in the generation of 20 million video frames, 900 frames of film, and 2 trillion bits of data. Hundreds of thousands of people have already taken the opportunity simply to listen in, passively, to surface-space voice communications—and made modest payments to do so. Making data available on the atmosphere, surface and subsurface characteristics of the bodies in our solar system, including the planet Earth, and spacecraft operating data as well—all directly, while they were being generated–could allow and prompt a much greater direct public involvement, both here and abroad, in the publicly supported U.S. civilian space program. As well, it could increase, by orders of magnitude, today's study and appreciation of these space data, spacecraft technology, and space activities generally, especially by our younger people. In time, the market could well prompt the creation of "service-added" organizations that could prepare various educational packages with a wide variety of users in mind: students of various ages and interests and many of the general public with home TV receivers, video recorders, and computers.

8. **Using Space and Space Technology for the Transmission of Electrical Energy. -In effect, any radio communication involves the transmission of energy through the Earth's atmosphere and/or space—albeit at miniscule power levels. A few years ago, tens of thousands of watts of continuous microwave power were transmitted in** free space with very high efficiency and reliability, and multi hundred million dollars per year Defense programs are now anticipated that would see at least 10 megawatts transmitted through the atmosphere and/or space via collimated and directed microwave and optical electromagnetic beams. Use of such methods and means might allow electricity to be distributed usefully across space. Energy sources could be located in geostationary orbit and/or on the lunar surface and the energy transmitted to the Earth's surface. Or energy could be supplied from the Earth's surface, as needed, to geosynchronous orbit and to a million miles or more beyond, at any desired power level. Given that the cost of electricity is very much higher in orbit (where it is provided by solar cell/battery combinations) than at the Earth's surface, the latter might be able to be done competitively at an earlier date.

The ready availability of such electrical energy in space could allow a complete rethinking of the design and use of space assets and activities in such space-related areas as communications, navigation, position-fixing, remote sensing, and even transportation. This is because systems designers could anticipate having tens of megawatts (or more) of electrical power available in space, whereas they now have only kilowatts and still only tens of kilowatts by the middle of the next decade, and system operators would have to pay only for the amounts of power that the systems would actually consume, just as at the surface. In addition, many areas of the world have enormous renewable energy potentials (especially hydro, but solar as well when the conversion process becomes economically attractive), but they are located too far from other areas which

[3] *Christian Science Monitor,* **Jan. 6, 1984.**

need such energy. A reliable, cost-competitive and efficient solution to the very long-distance (several thousands of miles, and intercontinental) transmission problem could allow surface-generated (N. B., in this case not in-space generated, as in the Solar Power Satellite concept) electricity to be distributed via space. Most importantly, electricity generated by renewable sources could be treated as an exportable commodity, and international and intercontinental distribution and load-shedding could become a global possibility—to great economic, social, and political advantage.

And, of course, when such technology is reliably and economically in hand, it could be used to supply electrical "fuel" to spacecraft on voyages to and from the Moon, and farther.

9. **Reducing the Cost of Space Transportation. —Whatever other measures are used to characterize civilian space activities, that of the enormous cost of in-orbit assets and activities is certain to be listed.** The primary "cost-driver" is that of space transportation for people and physical assets. For the predictable future, it will cost well over $1 ,000/lb (1984$) to place human and equipment payloads into 200-mile high-Earth orbit, in an era when, near the Earth's surface, they can be transported by aircraft over 10 times the distance at one-thousandth of this cost. Such a great cost differential continues to be one of the greatest inhibitions, perhaps the greatest inhibition, to our investment in, and use of, our Earth's space. We could now begin to look well beyond the Shuttle, and the specific technologies, fuels, payloads, and operations basic to its design and use. We could mount large-scale, advanced technology development programs that would address promising methods and means of providing reliable space transportation at much lower unit cost, giving full consideration to the future circumstance of the much greater space traffic volumes that such lower costs could engender. An initial objective could be to reduce the cost per pound for transport between the Earth's surface and low-Earth-orbit by an order of magnitude.

10. Increasing Commercial-industrial Space Sales.–The United States has spent well over $200 billion (1984$-adjusted) to learn how to enter space, to survive and function in it, and to use it. In doing so, the Nation has accrued an enormous reserve of space knowledge, assets, and experience, and created a sophisticated high-technology space industry administered and managed by Government and non-Government professionals in essential harmony with many other professionals in our university community. With one important exception, the entire civilian space effort has continued to be supported from the public purse. The time has now been reached when our private sector—commercial-industrial-financial—could begin to assume an increasing responsibility for the conduct of our civilian space activities. The one exception, the private satellite communications business, has already reached sales of some $2 billion per year and continues to grow at an average 15 percent per year rate, compounded. Government organizations, policies, activities, and leadership could now be structured not only to see that the growth in this one economically successful space field is maintained, but that other space fields (navigation, position-fixing, tourism, remote sensing, and materials processing) are likewise explicitly encouraged to grow and prosper. The President has announced a space strategy "to encourage American industry to move quickly and decisively intc space. Obstacles to private sector space activities will be removed, and we'll take appropriate steps to spur private enterprise in space, " And the Space Act has now been changed so as to require NASA to "seek and encourage . . . the fullest commercial use of space." New businesses, increased employment, increased sales here and abroad, the introduction of new and useful public and private services, and larger Federal, State, and local tax revenues all lie in prospect, once the present private sector learns how to moderate its dependence on the Government's largess and its slow-paced, structured way of doing business, and new private, competitive, entrepreneurial activities are formed and grow. One of the most important civilian space objec-

tives now could be that of seeing that procurement of more and more of our space assets, and the conduct of more and more of our space activities, become commercialized, so that: 1) the net burden of space activities on the public purse is sharply reduced, and 2) the Government can apply its resources to the achievement of objectives that either are not appropriate to the private sector or lie beyond its capabilities.

As these economic benefits grow, they could be looked at as offsetting, at least to some extent, the cost of our publicly supported space program. Social benefits also must be kept in mind, since a fundamental purpose of government is that of meeting important public needs that the private sector inherently cannot.

Of course, a number of other objectives could also be entertained. These could include: increased emphasis on a solar system exploration program, augmenting the expected wide-ranging *core* solar system exploration program mentioned earlier; a global person-to-person satellite communications system/service; an in-space "sophisticated-machine" experimental and demonstration program; etc. It is clear that when truly imaginative minds become impressed with the broad dimensions of the space domain–not only its physical magnitude and character but the opportunity for innovative uses–there is little apparent limit to the number and kinds of concepts for exploring and using it for earthly benefit.

Underlying a decision to pursue any or all of these objectives would be a concern for the basic welfare of our own and indeed all of the world's people; a challenge to international cooperation in large, exciting, and peaceful activities; a challenge to the basic innovativeness and cost consciousness of our private sector; a commitment to the permanent human investiture and considered development of both our Earth's space and our Moon; and a general sense of "spirit-lifting."

Box I.—Opportunities in Space Science

The past 25 years have seen a spectacular increase—both in breadth and in depth—in our understanding of our surroundings in space through the use of space technology. Every planet visible to the naked eye, from Mercury to Saturn, has been examined close-up by fly by, orbiter, and/or lander space vehicles. Major advances have been made in our knowledge of the Sun, the interplanetary medium, the stars, and the galaxy. Entire new fields such as X-ray and gamma ray astronomy have opened up. There is now evidence from the Infrared Astronomy Satellite that 10 to 20 percent of Sun-like stars may have some sort of planetary system. Much has been learned about the behavior of human beings in the space environment, although it is fair to note that none of this can be described as fundamental biology.

There is an extraordinary opportunity to build on these advances in the near future. The technology is now in hand for a wide variety of space vehicles; some could rove over the exotic surface of Mars; others could return samples from cometary nuclei; others could land in the presumptive liquid hydrocarbon oceans of Titan and sample the organic chemistry there (thought to be similar to the chemistry that 4 billion years ago on Earth led to the origin of life); and still others could fly into the Sun, acquiring and transmitting data until they burn up. Trips with human crews to the Moon and to asteroids (dating back to the origin of the solar system) that come near the Earth are possible for considerably less than the cost of the Apollo voyages to the Moon.

Among the many accessible objectives in high-energy astrophysics and space astronomy are investigations of massive black holes, quasars and pulsars, a resolution of the vexing problem of the "missing mass," and major advances in our understanding of the origin, nature, and fate of the universe. Major steps forward in the search for other planetary systems and other lifeforms can also be anticipated.

In terms of the fundamental understanding of our physical universe and ourselves, there has never been a period more promising than the next decade, if adequate funds are allocated and if "space station" and other programs are designed to maximize such research opportunities.

After careful study, and the weighing of costs and alternatives, it seems reasonable to observe that any decision to pursue them could be taken as reflective of enlightened U.S. leadership in the thoughtful, bold, imaginative, and purposeful development and use of space.



INDICATED INFRASTRUCTURE

Some of these objectives, if they are to be achieved, would require certain elements of in-space infrastructure; others, depending on how they would be carried out, may or may not require such elements; still others would require none. The manner in which the United States obtains any of this infrastructure should reflect, to the maximum, our already great investment in space technology and operations; whenever reasonably possible, it should be obtained at the lowest capital, and operations and maintenance, cost to the public purse. It would embrace the views of NASA's chief scientist: "[n assembling the necessary hardware, the watchword is 'inheritance' . . . projects and spacecraft are to make maximum use of what has been done before . . . and use much common or hand-me-down technology, as much as possible rather than build custom hardware. . . ."[4]

If the Government's large capital costs for development and production are to be minimized and the private sector strengthened, then serious consideration should be given to encouraging the private sector to provide infrastructure elements, through sales, long-term leases, or on the basis of charges for actual service use, that meet Government performance specifications.

[4]Dr. Frank McDonald, quoted in *The Christian Science* Monitor, Dec. 28, 1983, p. 14.

Box K.—"Space Station" as a Focus for Automation Research

NASA is a national resource, a technology-driver for the whole Nation. International competition in automation technologies is a serious threat to U.S. commercial-industrial leadership. The "space station" program would be a good opportunity to help move our R&D efforts in automation onto a faster track. It has the additional advantage that there are no overriding institutional constraints, e.g., that workers would be concerned about the loss of their jobs as a direct consequence of introducing automation, or that certain important technology demonstrations would be too costly in the context of terrestrial practice.

Currently, much of the research in artificial intelligence is being focused on near-term applications; similarly, the development of robotics is tightly constrained by the current requirements of Earth applications. The "space station" program could provide an R&D incentive to work on research topics that are at once truly advanced and germane to the "real world." Possible R&D objectives could include a free-flying robot operating under supervisory control to service and maintain sophisticated satellites, or an automated system to undertake hazardous tasks such as handling cryogenic fuels.

If automation R&D were seriously undertaken in connection with a "space station" program, the many tasks needed to operate the system could be analyzed to select several generic problems of clear relevance to Earth applications. These could include the development of dexterous fingers and hands, flexible manipulators, and advanced sensors, and, especially, the integration of real-time sensing data into the knowledge base of expert systems. In addition, new parallel processing hardware would be required to meet the weight and real-time constraints of space applications. All of these components are necessary to obtain truly flexible control in not wholly determined task environments such as are found in space (or in mining, shipbuilding, undersea work, construction, firefighting, and medicine), in contrast to those of the factory production line. Such a space program would present the opportunity to develop and demonstrate coordinated, integrated control over a wide variety of interacting systems.

Beyond these advantages would come the general development of more sophisticated knowledge and experiential base in our scientific and engineering communities.

Obtaining space infrastructure in this fashion is not only a reasonable and effective use of U.S. space assets, but it could reduce the difficulty of obtaining public funds for the scientists, engineers, managers, and equipment needed to pursue more, and more important, space ends.

The main elements of longer term space infrastructure called for in pursuing the 10 objectives are:[5]

- an LEO capability to assemble and check out the large and sophisticated satellites and space structures needed to provide both the hazard-prevention and the direct audio broadcast global system/service [objectives (1) and (6)];
- an LEO human residential and working space to be used for medical research [objective (4)];
- a transport staging facility to support efficient travel to geostationary orbit, the Moon, and beyond, using reusable orbital transfer vehicles or other vehicles. This would address objectives (1), (2), (3), (6), (9), and **possibly** (8); and
- a storage facility in LEO would allow use of full Shuttle loads, helping objective (9), and staffed LEO laboratory facilities could promote objective (1 O).

Of course, if such infrastructure elements were available for the specific purposes that justify their acquisition, they could be used for additional purposes also.

Note that, in essence, provision of the infrastructure needed to pursue two of the larger scale

[5]No additional space infrastructure elements are needed to achieve objective (7).

objectives [(2) and (4)] could accommodate most of the needs of all of the other eight. In what follows, therefore, the cost of this infrastructure is included under these two objectives.

And note that no Government development of free-flying platform infrastructure elements is called for; they (e.g., MESA, SPAS, LEASECRAFT, EURECA, and the Space Industries platform) could and probably would be designed, developed and installed by our private sector, and/or other countries, and offered to the civilian space community—both Government and private interests—under appropriate sale or lease arrangements, where they could be used for the conduct of scientific research or the production of various materials under microgravity conditions.

Finally, note that large amounts of very costly electrical power (with initial capital costs as high as $10,000 per watt) are not called for in LEO; some 20 kilowatts would appear to be sufficient. Larger amounts appear to be needed only for any eventual commercial-industrial materials processing, and could then be provided and financed by the private sector in anticipation that such processing will prove to be profitable.

COST AND SCHEDULE

Attaining all of these 10 suggested conceptual objectives would cost money—overall, a great deal of money. In table 10, rough estimates are made for the cost of each of them, and the length of time over which each would be pursued. in all cases the cost estimates are rounded off to one figure. And, again, the maximum use of: 1) already developed and paid-for space technology, 2) the most truly competitive procurement methods, and 3) the most modern and least burdensome acquisition strategies and procedures, are all fundamental assumptions.

OTA's first rough estimate of the total cost of attaining all 10 of the objectives is some $40 billion (1 984$) over the next 25 years. But, seemingly in the nature of things, long-term high technology development programs such as these invariably encounter unforeseen difficulties and experience the pressure of unexpected external events. Indeed, the total cost should be understood to be no less than $40 billion (1 984$), and perhaps considerably more–as much as, say, $60 billion (1984$).6 Given the early period at which these estimates are made, there cannot be great confidence in their detailed accuracy. But such accuracy is not needed for the illustrative purposes for which they were developed.

if work were to commence on all of them now, the bulk of the cost would occur over the next 15 years.

Space transportation costs are not included in these estimates, except for an additional $0.1 billion (1984$) or so for each LEO-lunar orbit flight. Rather, it is assumed that some 10 Shuttle surface-LEO flights per year, at an average cost of about $0.1 billion (1984$) each, would be budgeted for all Government-sponsored civilian research and development purposes, including those considered here.

Clearly, these costs are great in total sum, especially in the face of other important calls upon Federal tax revenues during an area of multi hundred billion dollar annual deficits in the Federal budget.

While the total cost of our publicly funded civilian space program will reflect the magnitude and character of the objectives addressed in the program, and these will, in turn, reflect political decisions, the unit costs to acquire and operate the technology will reflect engineering and management decisions.

Beyond the observation that, in some general fashion, the cost will increase with the magnitude,

6 "In recent decades the average overrun on major programs, in constant dollars and constant quantities, has been slightly over 50 percent. The average schedule milestone has been missed by a third of the time initially projected. The average time to develop new systems has, until recently been increasing at the rate of three months per year . , each year. " Norman R. Augustine, "The Aerospace Professional . . . and High-Tech Management, " *Aerospace America,* March 1984, p. 5.

Table 10.—Cost and Schedule to Satisfy Objectives Suggested for Discussion

Objectives	Total cost[a] (billions, 1984 dollars)	Duration (years)
1. Establish a global information system/service re natural hazards	2	10
2. Establish lower cost reusable transportation service to the Moon and establish human presence there[b]	20	15, 25
3. Use space probes to obtain information re Mars and some asteroids prior to early human exploration	2	15
4. Conduct medical research of direct interest to the general public[d]	6	5, 25
5. Bring at least hundreds of the general public per year into space for short visits[e]	0.5	5, 25
6. Establish a global, direct, audio broadcasting, common-user system/service	2	10
7. Make essentially all data generated by civilian satellites and spacecraft directly available to the general public	0	25
8. Exploit radio/optical free-space electromagnetic propagation for long-distance energy distribution[f]	0.5	10
9. Reduce the unit cost of space transportation and space activities[h]	5	15
10. Increase space-related private sector sales[h]	0.5	25
	- $40[i]	

[a] Costs are for development and acquisition. Operations and maintenance costs are not included, except for some launch and operations costs noted for objectives 2, 3, and 4.
[b] 15 years to establish the settlement, and 3 visits/year at $0.1 billion each (plus basic Shuttle launch costs) over the following 10 years.
[c] On the average, one probe every 3 years and $0.4 billion each.
[d] $2 billion over 5 years t. establish a life sciences laboratory in LEO, and $0.2 billion/year thereafter to operate it. This laboratory could also be used for materials science and other research.
[e] 5 years to establish a LEO "lodge-habitat, " and its continuing use thereafter.
[f] $0.05 billion/year in addition to DOD expenditures.
[g] $0.3 billion/year for a 15-year technology development effort to reduce space transportation unit costs.
[h] This would also help efforts directed toward the other objectives.
[i] The actual cost could be as high as $60 billion (1984 dollars), if costs exceed initial predictions by 50%.

generality, and sophistication of the space capability acquired, it is difficult–indeed, it is impossible, at this time—to estimate the eventual cost to the Government of addressing these objectives and obtaining the required infrastructure. A number of the significant infrastructure "cost-drivers" are presented in chapter 4. Suffice it to say here that there are a number of factors that could influence the net cost to the taxpayer for acquiring space infrastructure, and many opportunities to minimize this net cost that could be grasped by vigorous and imaginative NASA management. Appendix D speaks to the matter of cost containment.

To this point, only the initial capital cost of LEO infrastructure has been considered. To this cost must be added its ongoing operation and maintenance (O&M) costs (and the O&M costs of lunar infrastructure also); the cost of instruments, furnaces, etc., needed for scientific experimentation in association with its use; and the interest cost of any money borrowed to fund the acquisition program.[7] We must remember, too, that infrastructure eventually becomes obsolete or wears out, and, since its support services will come to be depended on, this implies that some form of amortization and replacement will be called for.

A consequence of the successful attainment of any or all of these unit cost reduction objectives—and reduction in the unit cost of space

[7] Any such cost is not allocated (if indeed it were possible to allocate it) on a program-by-program basis. But, in the overall, the more than $100 billion per year now required to be paid on the Federal debt is a cost of Government that must be considered by Congress, at least implicitly, in all of its authorization and appropriation actions—in the space area as for all others.

transportation generally—would be to attract more private interest to space activities. NASA, in turn, would then be able to apply more scien - tific, engineering, and management attention, and more of its research, development, test, and evaluation funds, to the development of truly "cutting edge" technology in support of its science, exploration, and other activities.

CONCLUSIONS

To create a truly modern civilian space program, the United States now might well move to adopt up-to-date, long-term goals in the civilian space area, and to initiate work on a first family of specific space objectives to address over the next 20 to 25 years, If such goals and objectives were set, the Nation would have a clearer picture of the kind of space infrastructure required to meet the objectives, as well as the cost and schedule under which this infrastructure could be obtained.

The United States would also be able to treat its publicly supported civilian space program more explicitly as a direct investment of great potential economic importance, in addition to the other benefits that it provides. This might in turn ensure that the program's public costs would be prudently contained, that its economic benefits would be substantially and objectively enlarged, and that it would serve the broadest public interest.

Finally, if an early, paced transfer of management attention, commitment, and resources takes place away from further major development and/ or production of Shuttle capability, and if there is a vigorous and innovative pursuit of Government cost sharing with other countries and our own private sector, then the 10 objectives outlined here–or others analogous to them–could be aggressively pursued, and probably attained relatively soon, within the appropriations now expected to be received by NASA. And the attainment of these objectives would entail the acquisition of much of the in-space infrastructure that NASA now aspires to acquire. Also, if there is a continuing increase in extra-NASA payments for use of Shuttle services, and if the private space-related sector succeeds in continuing to grow at anything like its present rate, thereby generating rapidly increasing tax revenues, these important "offsetting" incomes could be taken into consideration by Congress when passing on NASA appropriations.

Indeed, a reasonable extrapolation from present funding circumstances would suggest that, by the end of this century, our publicly supported space program could be much larger than it is today.

It must be emphasized that whether or not, as a matter of public policy, our tax-supported civilian space program should be allowed to grow to the magnitudes discussed here as possible is not an issue addressed in this report. Rather, it is important to appreciate that, under certain conditions, expenditures for this program could be considered to be offset to a large extent by revenues, thus giving Congress more flexibility in setting expenditure levels than it has today. An important element of public debate about our space future, therefore, should be about the allocation of public, economically related investments therein—for we need no longer consider our public space expenditures as consumption expenditures that underwrite the salaries of astronomers, the technologies required for exploring the solar system, and the intangibles of "space leadership. "

The promising prospects now in view indicate what agenda items should be emphasized in public policy considerations of our long-term civilian space interests. For if, over the next quarter-century, we modernize our civilian space goals and lay out a family of objectives for our civilian space activities much broader than those usually discussed; if we determine to focus our Government and private sector skills on building, together, a great commercial-i ndustrial-financial private

sector space business in the face of growing international competition; if we administer and manage our space activities with vigor, imagination, and statesmanship; and if we take the lead in orchestrating the space interests and activities of all of the friendly countries of the world; then we can move civilian space activities into the mainstream of America 's- indeed, the world's— interests, reap great political, social, and economic benefits, and very soon begin to have our men and women strike out across the solar system.

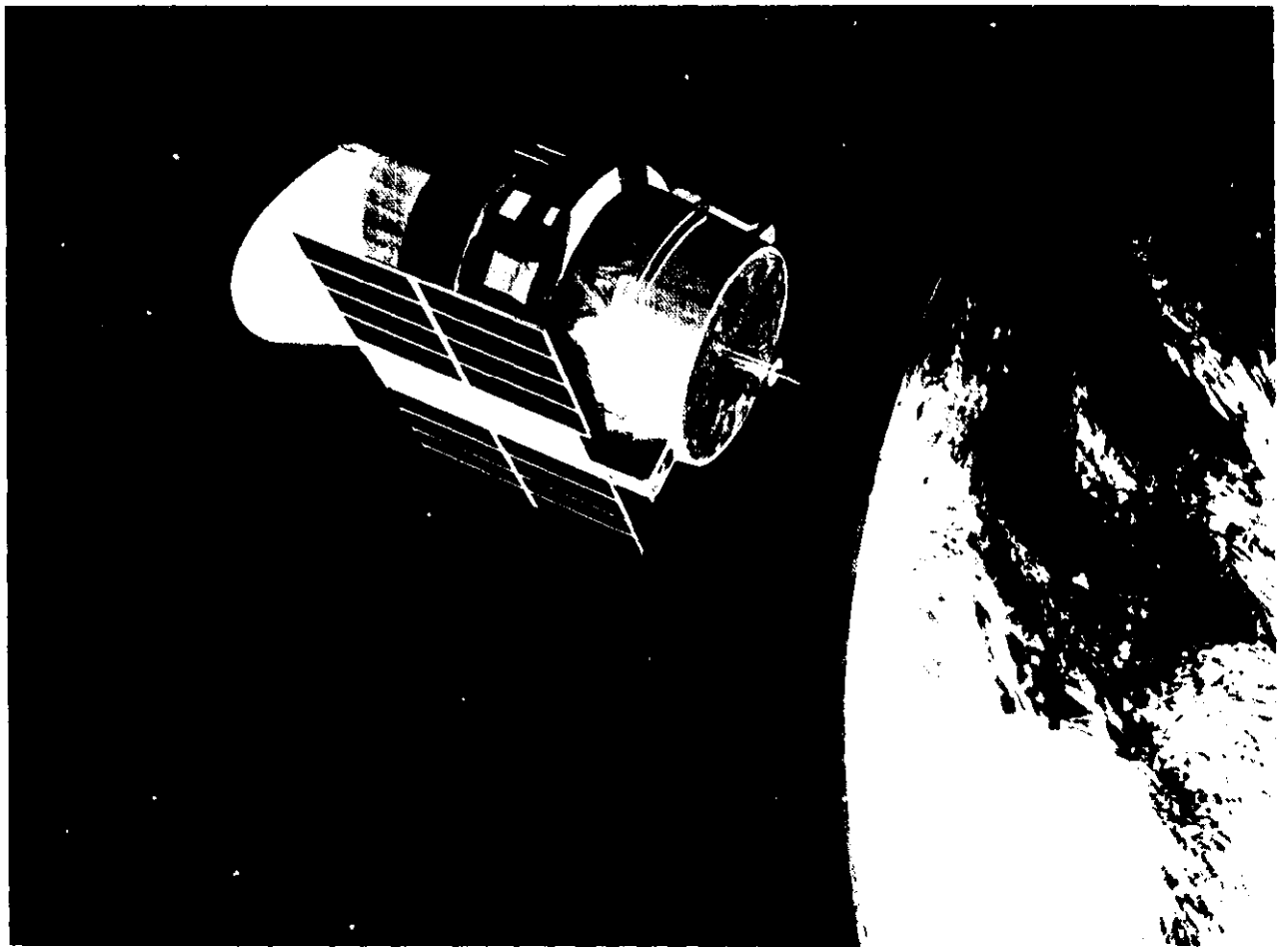

Phofo credif /Vaflona/ Aeronauf/cs and Space Adm/n/straf/on

Space technology has opened up the entire **universe** to observation and scientific research. Satellite (I RAS), a joint **project of the United States, the United Kingdom, and the Netherlands, produced dramatic revelations about the characteristics of other stars in our galaxy.**

FINAL OBSERVATIONS

Congress and the United States will soon have an unprecedented opportunity to rethink its basic views and interests in the civilian space area through the creation, and subsequent endeavors, of a "National Commission on Space. " Public Law 98-361 mandates that such an extraordinary Commission be formed.

In preparation for doing so, a few observations should be made about a truly fundamental concern held by many regarding our publicly supported civilian space program–a concern that, for the most part, goes unvoiced by professionals associated with this program, but which should be dealt with in any fundamental reexamination of it. In so doing, we should keep in mind that the essential magnitude and character of this program was set a generation ago in response to the major national security concern raised by the launch of Sputnik by the U. S. S. R., and subsequent international events and our perceptions thereof. Thus, the basic nature was set in another era to serve the needs of that era and, fundamentally, has changed little, even though those needs have long since been met.

This concern may perhaps best be expressed in question form: How can the U.S. people and Government justify, today, continuing to make such truly great and continuing public expenditures on space related matters perceived by most of our general public as (however at times interesting, and even exciting) lying well outside of the mainstream of their personal interests and concerns, particularly now that our military space program serves to offset most perceived U.S.S.R. space-related military "threats," and during an extended period of unusual national financial stringency?

As Congress begins to ponder this question, it might start by reflecting on an observation made recently by Freeman Dyson: " . . . if I look at, say, Senate hearings and Congressional Committees, they tend to pay **too much attention to scientists. They're always talking very much in quantitative terms and technical details** when the problems really aren't there. They very seldom ask, 'Well, what's all this **good** for?' " (Emphasis in the original .)[8]

In response to this question, many might be willing, in principle, to give the Government the "benefit of the doubt" when its leaders point out (as **they have nearly every year for** the past dozen, at least), that eventually such R&D expenditures will return economic benefits many times over. While there is a general consensus that, in macroeconomic terms, economic "spinoff" to the private sector has been significant, outside of the satellite communications area it has not been possible to identify with objective confidence, to date, that such great economic returns have been obtained (though there are grounds for hope that eventually satellite navigation and materials processing in space may also provide significant economic benefits).[9] And, of course, the same prospect for economic return could be advanced also about many other economically related R&D areas, high technology and not, in which Government expenditures are either essentially zero or only a very small fraction of today's annual $7 billion public civilian space expenditures. So there is understandable reserve and questioning about such a response. For most of us, $7 billion per year is a great deal of money.

Well beyond these kinds of considerations is the ethical concern of whether or not scientists, engineers, and managers should be paid so very well by the public to spend additional large sums of public funds each year to do such things as take photographs of distant planets. Many take the view that, with the immediate, continuing, and enormous problems faced by hundreds of millions of people throughout the world, with millions of U.S. (tax-paying) families having to live on a truly modest income or, indeed, having to deal with the lack of employment, with interest

[8] *The Washington Post,* **Apr. 9, 1984,** p.B-11.

[9] **However difficult it may be to quantify the benefits of space R&D, one can say with confidence that the use of weather satellites has saved thousands of lives. In addition, the use of surveillance satellites has resulted in savings to the Government that are on the order of tens to hundreds of billions of dollars.**

payments on our Federal debt now costing us over $100 billion per year, supporting space research and exploration of this great magnitude just doesn't seem to be a sensitive and equitable use of public funds or even, to some, a particularly decent human avocation.

The more general pro forma response to this concern, at least in part, is that: " . . . life is unfair. " Life is unfair. But most of us would probably agree that we all do have some obligation, when reasonably possible, to attempt to redress some of these sobering societal imbalances and that, at the very least, those who are generously supported by the public to engage in civilian space activities should share widely in the discharge of this obligation.

Another general pro forma response is that most grave and widespread human problems seemingly cannot be addressed by space-related activities, any more than they can be by a ballet production or a walk in a park.

In this assessment the more direct and useful response is that some of our civilian space program objectives can be purposely selected to see that space is used, specifically, to make progress toward important agreed-on societal ends. The suggested family of 10 conceptual objectives has been crafted so as to see that some of them speak directly to a few of the most fundamental human concerns that space and space technology can indeed be used to "get at": better protection from natural disasters, better communications among the world's governments and peoples in our nuclear weapons age, and greater understanding of physical conditions that affect all of us as we grow older. They are of such a basic nature as to be of potential value to "all mankind. "

And, as well, a basic theme suggested here is that the publicly supported civilian space program now could be organized and conducted to a considerable extent as a public investment program in basic science and high technology, and that its leaders now could be charged, explicitly, with overseeing all of our public space activities with a fundamental view in mind: that these activities lead, in both the shorter and longer run, to the creation of wholly new commercial-industrial-financial ventures, and to truly large-scale, rapid, objectively measurable, national economic growth —with all that this implies for the delivery of new, useful, public and private goods and services, increased employment, increased deficit-offsetting tax revenues, and a more competitive international trading position.

And another basic theme is that the U.S. Government could now endeavor to orchestrate the interests and capabilities, however diverse and/or small, of all of the friendly peoples of the world in cooperative civilian space activities.

If the United States does all of these things, and does them in a truly efficient and productive manner, then we would see space being used, where space can sensibly be used, both to **protect and to ease the human condition.**

With the creation of such major space-related programs to address such basic human concerns, and appreciating that most of us the world over, much of the time, "do not live by bread alone," we can in more reasonable conscience also continue to undertake—and even perhaps enlarge upon—space-related activities that, as well, **challenge the human condition: we can strike out from the Earth for the** Moon,[10] for the planets and asteroids, and indeed fix our eyes on ''distant stars.

But only if we pay our ethical dues to our fellow countrymen and women and to "all mankind"- and only if we meet our financial obligations as we go.

---

[10] An OTA working paper giving **the** thoughts of six philosophers on **"The Philosophical Implications of Establishing Permanent Human Presence in Space" is available from the OTA Science, Transportation, and Innovation Program office.**

POSTSCRIPT

This postscript gives the sense of a meeting of members of the Advisory Panel held in November 1983 at the Aspen Institute's Wye Plantation. The document was prepared by E. B. Skolinoff, and carefully reviewed by the participants. Certain exceptions expressed by participants are noted within the text.

The preparation of such a document by an OTA Advisory Panel is an unusual act ion; Advisory Pane ls are selected to represent a wide cross cross-section of informed opinion, and serve only to give guidance and review to an OTA assessment. In this case, however, the people l i steal below chose to go beyond the traditional role, and express their own views directly. Panel members have also been given the opportunity to fully review and comment on the fulltext of the report itself.

REPORT OF THE SECOND ADVISORY PANEL MEETING
Held at Aspen-Wye Plantation in November 1983

by
Professor E.B. Skolnikoff
Massachusetts Institute of Technology

Participating Panel Members*

Robert A. Charpie, Chairman
Harvey Brooks
Peter O. Crisp
Freeman Dyson
James B. Farley
Charles E. Fraser
Andrew j. Goodpaster
Charles Hitch
Bernard M. W. Knox
George E. Mueller, Jr.
Carl Sagan
Eugene Skolnikoff
James Spilker

The panel was asked to consider the proposal for a manned civilian space station in the light of the development of the Nation's space activities generally, and of possible future civilian activities and goals in space. The panel approached this task first as a broad enquiry into future objectives in space and how the proposed space station relates to those objectives. The results of that enquiry made it inappropriate for us to er-t-gage in a more detailed evaluation of the current space station proposal.

As background for our conclusions, we need to note that the panel believes U.S. civilian space activities are and should be of high value to the Nation domestically and internationally. The country has a variety of motivations behind its space commitments—-political, psychological, scientific, technological, economic—all of which have validity and importance. In particular, in looking to the future, the panel believes it essential that the program should come to represent again the sense of exploration and adventure, the energizer of both technological and institutional innovation, the source of outward-looking national pride that captured our imagination, and that of others, in its first two decades. Those characteristics can be achieved in different ways, not necessarily correlated to the magnitude of the space budget. We also believe there should be ways that the program can be used more effectively as an instrument for peace and cooperation in a world in which the environment of space is threatening to become one more arena for military competition.

Our conclusions are as follows.

I. Current Space Station Proposal*

The panel has major reservations about the current NASA concept for a permanent manned space station and recommends against commitment to such a project at this time. We are quite certain that a space station of some kind will eventually be needed. However, the objectives underlying the current concept seem diffuse and imprecise. Approval of the proposal now would tend to lock the Nation's civilian space efforts into a large, expensive program that would likely preempt alternative possibilities and programs.

The panel was most concerned about the absence of studies that evidence a larger vision of space objectives and opportunities, against which this, or any future space station proposal, could be evaluated (see 11). A space station should not bean end in itself, but rather a step toward other goals. Those other goals, which need to be carefully developed and publicly debated, should provide a necessary framework for evaluating the role and usefulness of any proposed design for a space station.

The panel recognizes that not all possible activities and payoffs can be anticipated, and that

***The participants** are in **general agreement with** this summary of **cone** lusions, **although** some **members may not** necessarily endorse **all the details or the phrasing of** certain **statements.**

*George E, Mueller disagrees with this conclusion, **which he** regards as **not** constructive with respect **to direct** ion **tor NASA, and** supportive of **unnecessary study.** He does agree with the **need to** make the space station a step **to** a long-range goa 1, and would support asking NASA to design a fac I lity to support such a program

unexpected opportunities emerge in the course of developing a new capability. And the panel accepts the validity of the desire to take advantage of the capabilities offered by the Shuttle. But some of the immediate functions envisioned for the proposed space station (exploring near-Earth applications, for example) can be evaluated without much, or any new infrastructure in space, in fact, by imaginative uses of the Shuttle; and a more fully thought-out station keyed to longer-range objectives would be more likely to stimulate innovation and imagination.

Moreover, the station as envisioned would appear to have little payoff either for development of new technology (see III), or for the political-psychological benefits at home and abroad we have already indicated should be given substantial weight (see also XI).

The development of a habitable space station to gain expertise of people in space is an important argument, but also one with little present basis for evaluation. We have seen no analysis of the differential costs of a manned v. an unmanned facility, nor an analysis of the opportunity costs of that differential. It is important that it be understood that the panel does not argue against man-in-space per se (the Shuttle may provide a good portion of that experience), but rather that a better rationale than has been provided us is required for a goal worthy of attainment.

II. Analysis Capability

The lack of studies analyzing long-term space goals and opportunities was striking to the panel. There were not even studies available that laid out possible alternatives to the current proposal. Without these, the panel felt it was not possible to sensibly evaluate the scale, nature, cost or purpose of a manned civilian space station. An initial "goals" paper prepared by OTA staff represented a start toward the kind of studies that are needed.

The panel believes this situation is deeper in its significance than simply whether adequate studies had been conducted before the space station proposal was put forward. NASA has been positively discouraged by successive administrations from engaging in or sponsoring much forward thinking, presumably to discourage the emergence of costly ideas or prevent the appearance of lobbying. One result is that apparently little capability exists within NASA, and essentially none outside, able to carry out on a continuing basis the kind of informed, analytical, critical studies that any major program area ought to have. The need is acute.

We have considered various options for creating such a locus for the professional study of public policy questions relating to the civilian space program and would make several observations. Clearly, NASA should have a larger internal capability for long-term analysis, but that alone would not be adequate for obtaining objective outside views or for establishing public credibility. The Administrator of NASA could, and we believe should, serve as a sponsor of such studies, perhaps working through a broadly based advisory committee to enhance objectivity and credibility. We recommend that early consideration be given to a long-term program of support of studies in the private sector (analytical organizations, commerce, industry and universities) that would build a community of knowledgeable analysts of the Nation's space activities, analogous to that which has been developed in other areas such as energy and the environment.

Such a program of studies also implies a more open planning process and the concomitant continuous rethinking of NASA objectives that go with that openness. This process can provide an opportunity for more extensive engagement of the private sector (see Vi), an objective we believe should be high on NASA's agenda, and can engage the interest of constituencies not already deeply involved in the space area.

III. R&D

A major factor in evaluating a proposal for the next step in the space program should be the contribution that objective will make to the development of new technology. The panel does not believe the civilian space station as proposed is likely to have as significant a technology-forcing effect as should be required from a program that would be the centerpiece of the space agency's activities for close to a decade.

In fact, the situation is more serious, for advanced technological development has been severely cut back in the space program since the early days of the Shuttle program. Key technologies that would be necessary for later missions, such as advanced space propulsion systems or machine intelligence and robotics, have not been adequately (or at all) supported because of fundding limitations. Even technologies to fully exploit current space applications have been relatively neglected. The current proposal for a civilian space station would generate little such technology development and, more than likely, would prevent funds being available for such programs. Yet, those technologies represent what should be major payoffs of space activities and the central features of future space activities

Accordingly, we recommend that NASA engage in the conscious development of seminal.[11] technologies that are likely to form the bui!ding blocks for future space goals. This should be carried out in close cooperation with industry, rather than wholly in-house, with the Government stimulating private-sector ventures and financing where possible. The model of the highly successful relations between the National Advisory Committee for Aeronautics (NACA) and industry for aeronautical technology could well be followed by NASA for space technology development.

IV. Immediate Alternatives to a Space Station

In recommencing deferral of the proposed NASA civilian space station commitment, we do believe other steps should be taken. Two of high priority are given above: begin analyses of possible long-term space goals, and design a program of technology development. In addition, some of the stated purposes of the proposed space station could be explored with the existing Shuttles. In particular, the possibilities and viability of manufacturing in space, repair of low-Earth-orbit space satellites, and much scientific research can and should proceed with present capabilities and, if indicated, their modest improvements. Such programs can provide necessary information to judge more definitively what the real needs are to carry out those functions on a continuing basis. It makes little sense to make major commitments to an expensive large-scale facility if already existing capabilities remain underexploited because of shortage of funds,

In any programs undertaken in the near term, however, it is important that they not be allowed to develop a life of their own that prevents more desirable alternatives, or interteres with other ongoing programs of great importance, such as those in space science.

V. Long-Term Mission Possibilities

The panel discussed some possible long-term activities that satisfied some of the criteria we believed to be important: likely to command widespread attention, inherent scientific interest, technology forcing relevance to global issues, substantial significance to human problems, suitability for international cooperation (see VII) and private-sector participation (see X), We have not examined these in detail, nor do we advocate any particular choice They are suggestions of the kinds of space goals we believe should be analyzed and studied in detail.

One category of possible goals would involve programs (let igned specifically to contribute knowledge about present or future planetary and human issues. For example, programs designed to learn more about the global ''~rw>r~hou:)~)' effect that could result from accumulating carbon dioxide in the atmosphere through, among others, intensive examination of the atmosphere of Venus, which has experienced its own massive CO_2 ''green house." Another such goal would be the study of the effects of large-scale fire, volcanic action and dust storms through targeted studies of the Martian environment, which is rite with such events.

More directly Earth-oriented, a possible organizing focus of an important segment of space activities could be the detailed monitoring of the habitability of our planet on the surface and in the atmosphere. The substantial hazards and possible catastrophes lying ahead —CO_2 and other gas accumulation, ozone depletion, soil depletion, deforestation, desertification, agriculture disease vulnerability, among others—make a major dedicated program of global monitoring potentially of crucial importance for the future.

A different kind of goal in space would be to contribute directly to more general research objectives in the life, material, or other sciences. For example, some of the effects of zero gravity on the body appear to be similar to the effects of aging. Are there important contributions that can be made through space research programs on aging, an increasingly important social goal for an expanding global population? Many other such complementary research targets could undoubtedly be developed and evaluated.

And, of course, there is a long list of possible scientific goals in space that can be considered:

1. unmanned rendezvous missions to an asteroid or comet to provide early solar system history;
2. Mars exploration, with unmanned roving vehicles;
3. landing on the Saturn moon Titan, which has a nitrogen atmosphere, complex organic matter and strong evidence of a liquid ethane/methane ocean;
4. solar spacecraft able to penetrate some distance into the Sun while sending back information; and
5. Venus probes.

Longer-term:

6. landing on asteroids, planets or comets with return of sample material;
7. probes beyond solar system;
8. manned lunar station;
9. manned asteroid station; and
10. manned missions to Mars.

Note, incidentally, that the current space station proposal would not necessarily be the preferred next step for most of these goals.

V1. Private-Sector Involvement

The panel is strongly of the belief that the private sector can be more effectively and extensively engaged in the Nation's space activities than it has been to date. For the most part, current involvement has been restricted to a select group of NASA contractors or subcontractors. There is need for involvement of a much broader industrial constituency to elicit new ideas for space applications and techniques. Not only is it desirable to engage the innovative and entrepreneurial character of American high-technology industry, but also to attempt to bring down unit costs of space assets and activities over time, and to involve consumer-oriented industries in space applications that may be marketable.

To engage the private sector effectively to achieve these objectives poses several requirements. Consultation with industry should start with a broad dialogue on a wide range of possible space goals and mission opportunities, not with the detailed design of an already-determined space station.

A second requirement is to develop a clarity of commitment to activities that signals long-term interest. Such commitment is necessary to encourage industry to invest its resources of manpower and money in the development of technology potentially useful for those activities. Such a clarity of commitment should be the outcome of the joint studies and consultation referred to above,

A third, with regard to space applications, is to use either public corporations (perhaps of the Comsat type) or other institutional innovations to take over commercial development and exploitation of space technology. NASA is not well suited to the design and marketing of commercial/industrial systems or services—that is not its purpose—and simply attempting to hand over an existing developmental system, such as Landsat, to the private sector for operation is unlikely to be viable.

It is also possible that the present structure of NASA is not well suited to prompt a major increase in private-sector space activities because of the present large commitment to in-house laboratories (see IX) and present technology procurement practices. We cannot make a definitive judgment on that, but recommend an objective evaluation by NASA and by Congress.

VII. International Cooperation

International cooperation has been a goal of the U.S. space program from the beginning, but the panel believes much more could be done. Cooperation is particularly attractive for future activities for several reasons: technical competence is more widely distributed throughout the world than in the past, resource limitations are

more of a constraint on all countries, and many space activities are relevant to all people, not just Americans.

It is possible that the costs of space activities could be reduced by genuine joint programs that enlisted not only the funds, but also the talents of other nations. Examples, such as Spacelab, already exist. But for more extensive cooperation, there must be a commitment for joint planning at a very early stage, and reasonable guarantees of program continuation once a commitment has been made. Past history of American project cancellations in midstream do not contribute to confidence in the United States as a reliable partner.

Near-Earth space applications are of obvious interest to other countries from a commercial perspective, but programs for monitoring the changes in habitability of our planet would provide other common motivations. And, planetary probes that would potentially provide information relevant to this planet's concerns—for example, those goals mentioned earlier of improving understanding of the CO_2 greenhouse effect by studies of Venus, or gaining knowledge of the effects of fire, volcanoes and dust from study of the Martian environment—would also provide common foci of interest with other countries.

In fact, the potential benefits for all from space activities should provide a high incentive target for cooperation even if the other possible benefits of resource and talent sharing are less clearly relevant. There are also, of course, difficulties inherent in international cooperation, difficulties that stem primarily from problems of meshing of disparate bureaucracies and political systems. There is also the problem that the structure and incentives in NASA, and more broadly in the budgetary and decision process in the U.S. Government, do not lead naturally to seeking international cooperation. This, too, is an **issue we** believe deserves separate attention by NASA and by Congress.

It should be noted that there seems to be considerable interest within Western industrial countries in cooperating on the proposed civilian space station; European countries, Canada, and Japan are **waiting** for the United States to decide what it intends to do. Cooperation, to be really meaningful, must involve joint planning and study of alternatives before selection is made. We recommend a more open set of discussions that ask what we and other interested countries *should* be doing together.

Any military overtones to NASA projects (see VIII) will likely have a negative effect on possibilities for international cooperation. Though it may be possible in practice to separate the military from the civilian interests in specific missions, it is a problem that we cannot afford to ignore.

There are also potential political benefits to be gained over time through intimate and extensive cooperation with others. Cooperation with Eastern bloc countries, and especially the Soviet Union, will not remove the sources of conflict, but may be used as an instrument to ameliorate those conflicts and offer alternatives.

VIII. Effect of Military Programs and Interests'

The panel is very concerned about the effects on the civilian space program of a major new and enlarged focus on military uses of space. Though there might be some budgetary competition, the primary problem would be the competition for scarce technical manpower and industrial resources. The most qualified personnel would likely be attracted to the rapidly expanding and technologically exciting defense sector, and NASA itself might see some of its best people leaving.

In addition, such a large-scale military commitment would likely serve to give a military image to our space activities abroad, where the distinction between civilian and military interests may **not be clear.**

International cooperation in the civilian program may also be harder to achieve because of increased concern in the United States over apparent loss of technology assumed to be critical for national security. Controls over information could well be sufficiently onerous as to rule out some forms of otherwise desirable cooperation.

***To avoid the appearance of possible conflict of interest, members of the panel with past and present involvement in military space activities did not participate in the formulation of this section of the report.**

IX. NASA Operations and Organization

The panel did not make any formal evaluation of NASA's structure and performance, but a few observations based on the experience of panel members and the issues at stake are in order, some already mentioned.

As has been noted, NASA is not well positioned for much more extensive cooperation with the private sector, or with other countries. The specific reasons are different in each case, but the underlying factors in NASA appear to be: the pride in past successes achieved by "going it alone"; the perception of private-sector activities as competitive with, not complementary to, its interests; the lack of desire among most scientists and engineers to devote themselves to the administrative orchestration of multicultural, multi-political projects; and the large fixed facilities of NASA that inhibit flexibility. All of these discourage assignment of major responsibilities outside the organization.

This structure also serves to maintain high fixed overhead costs in NASA, again discouraging exploration with industry of ways of bringing unit costs down. It is not clear what cost reductions would be possible, but it would be difficult to evaluate the possibilities given the present structure.

To some extent, the existing structure may also discourage the development of alternative goal concepts, and generally inhibit imagination, since changes in programs may have negative effects on the present organization.

These observations may be exaggerated, or should perhaps be balanced by other important attributes. We urge attention to the issue, however.

X. International Economic Competition

International competition in provision of civilian space services has already emerged, primarily with European countries, and is likely to grow **in the future as Japan becomes more heavily engaged. To some extent, that competition has** been encouraged by **U.S.** policies that have not provided adequate guarantees for the future, such as launch services, or have not been adequately consumer-oriented in systems design and development (for example Landsat). However, competition is inevitable, quite apart from U.S. policies, for advanced industrial nations with high-quality technological capabilities are likely to enter any market with economic potential.

Men and women in orbit, utilizing sophisticated and costly space assets, may be an important capability for U.S. commercial exploitation of the economic potential for near-Earth orbits, but we consider that case as not having been demonstrated as yet. In fact, commitment to such a capability could delay exploitation, by preempting funding and personnel that might better explore possibilities with industry through **use of the present** Shuttle capability or its modest extensions. It could, in fact, be a massive commitment to the wrong kind of station, even **for economic purposes.**

There is another aspect of the economic value of space activities—the spinoff of new technology to the commercial sector. In this respect, as we noted before, the proposed space station would likely hold relatively little interest as a means of developing new technology—especially in comparison with other feasible goals.

XI. Geopolitical Competition

The Soviet Union has been conducting a vigorous manned space station program which, notwithstanding some serious mishaps, is apparently on track. Beyond the continuing exhibition of space prowess, presumably of important political value to them, the uses to which their capabilities are intended to be put are not clear– perhaps this is similar to the American situation— though Soviet Union scientists have often indicated that the long-range goals for their space program include manned bases on the Moon or Mars. Regardless of later goals, they have certainly been gaining useful information about people in a space environment (which they share quite extensively with the United States).

There is **a natural reaction** in **such circumstances that leads to programs undertaken to "match" the achievements of the Russians, or to be concerned about the information or experience they have obtained that is not immediately**

available to us. But, for the United States to undertake a large-scale program not necessary, or ill-suited, to our needs is more likely to handicap us in the future in geopolitical competition with the Soviet Union. Especially is this so in this case in which the civilian space station goal is not likely to command dramatic attention or to lead to important new technology.

Civilian space activities are, in fact, an important arena for international political competition. The panel's plea is for the United States to aim for a goal worthy of attainment from this perspective, as well as from others. The international political effects of visible, dramatic nonmilitary accomplishments are important in presenting an image of a dynamic Nation able to preserve its vitality in an open, democratic form of government. Many throughout the world find hope and encouragement in that demonstration; it is important to us as well as to them.

We note again that competition in civilian space accomplishments need not rule out the possibility of some cooperation as well, even with our primary competitor. The more important the subject, the greater would be the political significance of cooperation.

We close with reiteration of the panel's conviction of the importance of the civilian an space program to the country, and the significance of the next major steps in space that the Nation undertakes, Our ideas, our imagination, and our critical analytical abilities need to be engaged i n laying out the alternatives before us just as our institutions, public and private, need to be appropriately engaged in implementing the decisions finally made. In the long run, a sustained and effective civilian space program wilt depend on building a lasting political consensus,a consensus based on informed public debate and understanding of the significant objectives that can be served by civilian space activities.

APPENDIXES

Appendix A

RESULTS OF PRINCIPAL NASA STUDIES ON SPACE STATION USES AND FUNCTIONAL REQUIREMENTS

Early in 1982, NASA established working groups to prepare for and coordinate a planning program to acquire a long-term in-space inhabited infrastructure, i.e,, a civilian "space station. " A Space Station Steering Committee at NASA headquarters led a two-pronged effort. A Technology Steering Committee had the task of assessing the current state of technology and planning any needed development activities for the program. At the same time, a Space Station Task Force became the principal planning group to consider types of activities (user needs/desires) to be carried out with any new long-term infrastructure, system physical characteristics, concept development, and management organization.

To support the Task Force as well as help clarify various issues involved, NASA authorized a series of parallel investigations of the potential desires for, and characteristics of, such infrastructure. These studies (costing more than $6 million altogether) were made by eight U.S. aerospace companies (with their associated subcontractors). In addition, the European Space Agency, Canada, and Japan funded essentially parallel user studies of their own. Related investigations of possible nonaerospace industry interest in space use were made by two consulting firms.

Major Findings of the U.S. Aerospace Industry "Mission Analysis Studies"

In anticipation that the United States could decide to build a publicly funded, habitable, permanent civilian "space station", NASA asked eight aerospace industry contractor groups to perform independent "mission analysis" studies to indicate what it could be used for (the desires and/or needs), what capabilities it should have to meet them (its attributes), what its fundamental characteristics and components might be like (its architecture), and what costs and benefits to the Nation might be expected of such a space program conducted over the remainder of the 20th century. Emphasis was to be on the user communities, national conceptual uses, and general architectures, not specific configurations.

in essence, they were asked to answer the questions "If the United States were to acquire an initial civilian "space station" complex in low-Earth-orbit (LEO) in the 1990's, who could use it, how could they use it, what attributes, capabilities, and types of components should it therefore have, what would it cost, when could it become available, and what benefits could its use provide?"

The contractor groups (in each case a prime contractor, usually with several subcontractors) communicated with the individuals, organizations, and insti - tutions that might be expected to make use of such in-space infrastructure to ascertain the important present and potential desires and/or needs for it, with emphasis on those uses that would require or materially benefit from it. They then analyzed these various uses as a sequenced set of activities, so as to identify and characterize infrastructure attributes and capabilities that would be necessary in order to meet them. Sufficient study of major components and architectural options was made to provide reasonable indications of how adequate infrastructure could be provided.

They next provided programmatic and scheduling plans in order to predict when various portions of the program could become operational. Finally, costs of establishing the overall space infrastructure were estimated and the economic benefits projected that they foresaw through its use. The companies drew conclusions and made recommendations regarding further developments.

The eight prime contractors performing these studies were Boeing Aerospace Co., General Dynamics Corp. (Convair Division), Grumman Aerospace Corp., Lockheed Missiles and Space Co., Martin Marietta Corp., McDonnell Douglas Astronautics Co., Rockwell International, and TRW. About 20 other high-technology companies were involved as subcontractors. The final reports were submitted on April 22, 1983. Their results have been published in a series of volumes entitled "Space Station Needs, Attributes, and Architectural Options."

The major findings of these contractor studies are outlined below.

Users and Uses (Mission Requirements)

The aerospace contractors actively sought out the interests of potential users of LEO infrastructure in order to project what kind and extent of activities its support assets and services should provide. Users were

I The Department of Defense also participated with NASA in these studies, and paid 5 percent of their cost. For the most part, the studies related to national security are classified, and no further reference will be made to them here.

categorized under the three broad areas of science and applications, commercialization, and technology development.

The fields of astrophysics and solar physics, life sciences, environmental sciences and Earth observation, materials processing, and communications sciences all offered examples of possible uses of an initial complex. Over the longer term, it could be used as a base for launching lunar, asteroid and interplanetary research spacecraft. Advantages of having a human crew were seen in instrument and equipment servicing (predominantly for Earth observation, plasma physics and astrophysics) and human involvement in research (predominantly in materials processing, life sciences and solar physics). Research in most life sciences, and some materials and astro/solar physics was deemed impractical without direct human participation; one contractor concluded that 41 of 75 science activities would benefit from a human presence. The servicing of equipment would produce the side benefit of seeing instrument assets in space accumulated. Long-term operations would be especially important to some research.

The permanent infrastructure would include "free-flying" tended platforms to ensure isolation (where needed) from the possible dynamic disturbance or contamination of various kinds that might be present in an inhabited location.

Commercial possibilities were suggested for remote Earth sensing in the fields of petroleum and mineral prospecting, and agricultural forecasts; for materials processing; for on-orbit satellite launching of meteorological, navigation, and communications satellites to higher, even to geostationary Earth orbit (GEO), and for satellite servicing (although CEO servicing would not be possible using the initial infrastructure now envisioned by NASA).

Almost all Earth resources observation from space currently employs satellites without a crew and their use will continue; however, the contractors found advantages in using people to select surface locations to be studied, instruments, and observational parameters. Having space infrastructure also would enable concurrent multidisciplinary observations, and the crew would add the flexibility to modify the instruments during long-term observation periods.

The economical processing of some materials under conditions of near-zero gravity is one of the more intriguing possibilities for eventual commercial exploitation, with such materials as pharmaceuticals, alloys, semiconductors, and optical fibers as products. (Market demand for each of these products is seen by some of the more optimistic contractor groups as having the potential to grow to the multibillion-dollar-per-year level by the year 2000 if they could be made available at acceptable prices).

McDonnell Douglas Corp. has already pioneered in exploring the use of the electrophoresis process to produce pharmaceutical materials aboard the Shuttle. Electrophoresis is a separation process in which electrically charged particles suspended in a solution migrate through the fluid in the presence of an applied electrical field. If the particles are of microscopic or larger size, a common process limitation is a sedimentation of the particles under gravitational conditions. The effective absence of gravitational attraction when conducted in orbit around the Earth permits the process of separation and purification of such materials as proteins and pharmaceuticals to proceed at rates 500 to 1,000 times faster than on the surface of the Earth.

Several other companies are giving serious consideration to studying and manufacturing materials in space. However, the contractor groups agreed that the concept-to-market process generally takes many years, that a space research laboratory is required, that for at least some of the studies professionals in situ and continuous operations are very important desiderata, and that for most production processes, very large amounts of electrical power (in present space terms) would be essential.

Satellite communications is already a 20-year-old, highly successful, world-wide commercial space enterprise. It is seen as a business that should continue to expand rapidly. The required technology should move in the direction of large, dynamically controlled, multi-antenna subsystems, on-board switching, and high r.f. power, for which a "space station" may well be seen by some as essential (or at least desirable) for efficient structural assembly and deployment, testing and check-out, lower-cost transportation to geostationary orbit—and eventually, perhaps, the servicing of GEO satellites.

Satellite servicing is seen as enabling resupply and repair of co-orbiting space vehicles, and those in other orbits, such as polar or geostationary. In the latter case, a Reusable Orbital Transfer Vehicle (ROTV) would be needed to deploy or retrieve the spacecraft, as (according to several contractors) extensive servicing would usually by done in, or in the vicinity of, a central "space station" complex.

LEO infrastructure is seen by the contractor groups as enabling space technology development on all fronts–developments of interest to materials processing, communications, flight controls, fluidics, large space structures, on-orbit assembly and test, robotics,

etc. All of these would benefit because of the sophistication of the support equipment that could be provided them, the longer time available for work in orbit than is provided by the Shuttle, and the extensive crew involvement needed, at least for the foreseeable future, for construction, calibration, and test.

Phased Activities (Mission Sets)

The contractor groups assembled sets of activities and operations responding to needs and desires expressed by potential **users** in order to estimate the assets and services required to support them for varying stay times in space. The preferred orbits were seen to be a low-Earth-orbit whose plane would be at 28.50 inclination to the Equator (typical of launches from Kennedy Space Center, FL), a 57° inclination (possible from KSC with a more northerly insertion direction) and a polar orbit (available with launch from Vandenberg AFB, CA). In some cases, staging to geostationary orbit or to escape velocity (for lunar, asteroid and/or planetary flights) would be necessary.

Most of the studies identified several hundred possible uses and desires, a number well in excess of what might be accommodated during the 1990s. When examined in the context of realistic technical progress, the likelihood that such uses/desires would actually develop, and the benefits made available through such use, etc., the vast majority of those potential uses could be supported with infrastructure located in the low inclination orbit of 28.5°. This is exemplified by a typical distribution of activities shown in table A-1 as recommended by one of the contractor groups. The activities in this baseline set are noted as being best accommodated either by attaching them to a central, inhabited infrastructure complex, or locating them on free-flying platforms that would be tended only intermittently by crew members.

Inasmuch as some 70 percent or more of the potential needs/desires could be accomplished in the 28.5° orbit, it was the unanimous recommendation of all the contractor groups that any initial inhabited infrastructure be located in this orbital plane. Free-flying platforms, either co-orbiting or in polar orbit, could accommodate most of the remaining missions.

One example of the number of inhabited infrastructure-attached payload elements at any time (so-called station occupancy) is shown in figure A-1, in which the initial operational capability was assumed to occur during 1990. The projected activities are seen to reach a high number quite early in the development cycle.

Functional Capabilities

NASA has recently indicated that it expects proposed new space infrastructure to provide the set of functions described in chapter 2. One contractor's visualization of these functions is given in figure A-2, while table A-2 illustrates the corresponding attributes required for space infrastructure designed to accomplish the functions. Translated into physical quantities, the requirements for power, pressurized volume, crew size and Shuttle launches are typified by figure A-3. The initial power needs for the central space complex of the infrastructure are modest, about 25 kW, but as

Table A-1 .—One Contractor Group's Mission Set

	Attached to central infrastructure complex in LEO		Free-f l yers				
	Inclination plane		Inclination plane (LEO)				
	28.5"	Polar	28.5°	57"	Polar	GEO	Escape
Science and applicatlons:							
Astrophysics 7			6	3	1	1	
Earth and planetary 5	3			1	7		12
Environmental observations 7	4		1	7	4	3	
Life sciences 7							
Materials processes 2							
Commercial:							
Earth and ocean				1	2	1	
Communications 6						5	
Materials processes 14			1				
Industrial services 5			1				
Technology development: 33							
Operations:						2	
86	7		9	12	14	12	12
Total mission set 152							

SOURCE: Based on information contained in the study led by the General Dynamics Corp

Figure A-l .—One Contractor's Time-Phased Set of Activities Involving Work Crews

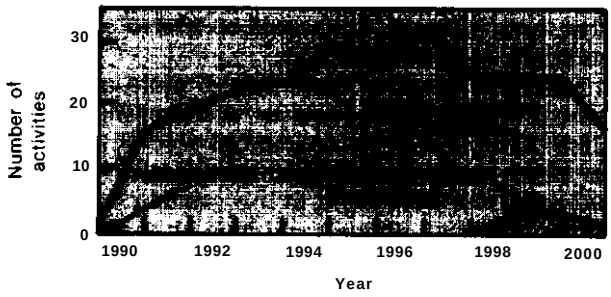

Conclusion: 28.5-deg station captures approximately 92°/0 of activities involving crews.

SOURCE Based on Informatlon contained in the study led by General Dynamics Corp

the experiment load increases so does the power requirement. If materials processing in space takes place on a commercial scale now visualized by some, the power demands could then become quite large. It is likely that, eventually, much of the materials processing production would be carried out on platforms with their own solar array power supplies; they would co-orbit with the central complex.

In the view of most contractor groups, an initial operational crew would consist of some three persons, with the crew size growing to as many as 8 to 10 in the mid 1990s. Corresponding pressurized volume for the crew and some operations might grow from about 200 m^3 to 600 m^3.

Five or six Shuttle flights would be required to establish the **IOC** infrastructure suggested in the studies.

Figure A-2. —A Representative Set of Functional Capabilities

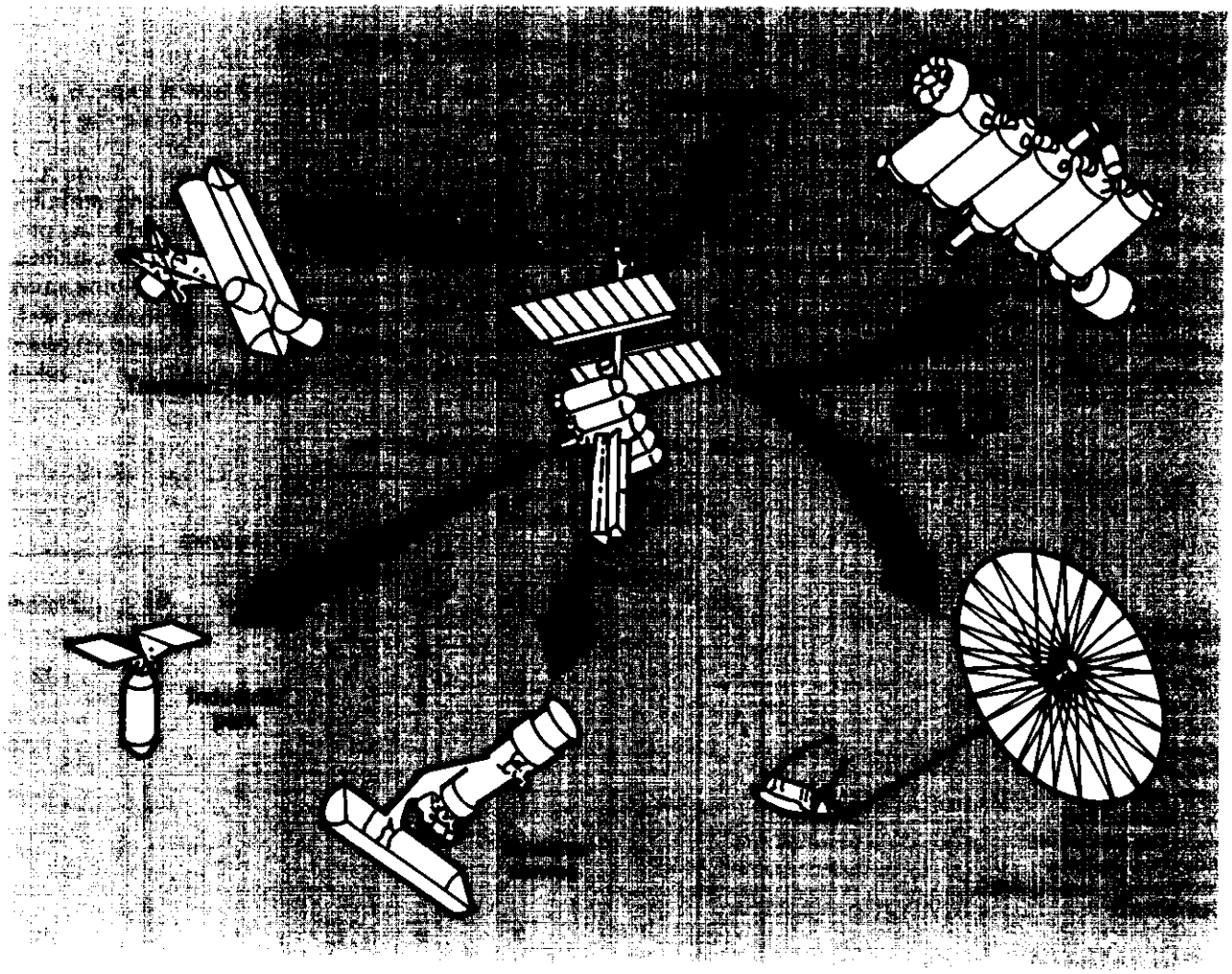

SOURCE Based on informationcontained in the study led by Grumman Aerospace Corp

Table A.2.—One Contractor's Estimate of Required Infrastructure Attributes

Accommodates activities with work crews:
. Micro-gravity
— Life sciences
— Materials processing
— Technology development
•Outward looking
— Astrophysics
•Earth pointing
— Earth exploration
— Environmental observation
Supports free-flyer activities:
•LEO/H EO satellites/platforms
— Emplacement
— Service
— Retrieval
•GEO satellites/platforms
— Emplacement
— Service
•Planetary satellites
— Boost
Provides resources:
•Work crew time
•Power
•Data processing
•Command and control
•Thermal control
•Stable platform
•Pressurized volume
•Exterior mounting
Provides functions:
•Assembly and construction
•Checkout
•Service
•Reconfiguration
•Maintenance and repair
•Transportation
•Storage

SOURCE: Based on Information contained in the study led by the General Dynamics Corp

Contractors estimated that civilian projects would require six or seven flights per year (fig. A-3). While three or four supply visits per year by the Shuttle would be needed for ongoing operations and maintenance (O&M), these could be partial-load deliveries combined with other loads.

Infrastructure Elements (Architecture)

It is at the implementation stage that the contractor groups' reports suggest quite different approaches to providing those in-space infrastructure elements needed to meet the user needs/desires. One conceptual array of components is illustrated in figure A-4. The central complex would be in communication with other elements including free flyers, free-flying platforms, a reusable orbital transfer vehicle, the Shuttle Orbiter, and ground stations via the Tracking and Data Relay Satellite communications system.

The components suggested by one of the contractor groups for the first central complex are indicated in figure A-5. A central command/habitability module provides overall infrastructure command and control, data handling, communications, and accommodations for a crew of four. (Several of the contractor groups' studies suggest three crew members at the outset.) Directly attached is the energy module where solar cell arrays and batteries provide electrical power and its conditioning and storage. (In this illustration, the energy module is pressurized; some studies suggest that it be mounted externally.) The third, logistics, module stores and makes available consumables and equipment delivered by the Shuttle. With only these three infrastructure elements, a crew could live in orbit satisfactorily for extended periods but would be able to accomplish relatively little scientific or other activity beyond those experiments that could be accommodated in the available internal space.

Additional elements shown in figure A-5 are the airlocks to permit people to move in and out of the habitability module and to conduct activities in space (so-called extravehicular activity (EVA)), an astronomy service pallet to enable mounting of scientific observatory equipment, and a payload service pallet to permit servicing of satellites and such auxiliary vehicles as an orbital maneuvering vehicle. The final unit suggested for the IOC is a materials processing laboratory.

The continuous power suggested would approach 25 kW (roughly corresponding with the initial level shown in figure A-3). Inasmuch as the crew accommodations might require about half of this amount, the power available to users would allow for materials processing experiments but not for some kinds of ongoing production.

Other contractor groups would arrange the infrastructure elements differently, with a possible command module separate from an habitability module, or an operations module combining energy generation and conditioning with a command and control center and EVA facilities. Some designs would incorporate tunnels or passageways to connect different modules.

Ten or more subsystems have been suggested to enable the infrastructure elements to remain in orbit and function satisfactorily. These are itemized in the organizational diagram shown in figure A-6.

In accordance with the NASA study directions to the contractor groups to envision the use of new technology where it would be beneficial, various new materials and theoretical designs for the subsystems have been suggested. An example of one contractor group's technology recommendations is given in table A-3; while most items are considered to be currently available in a useful form, advanced technology would be required to achieve the improved capability and/or

Figure A-3.— One Contractor's Estimate of Resources and Services

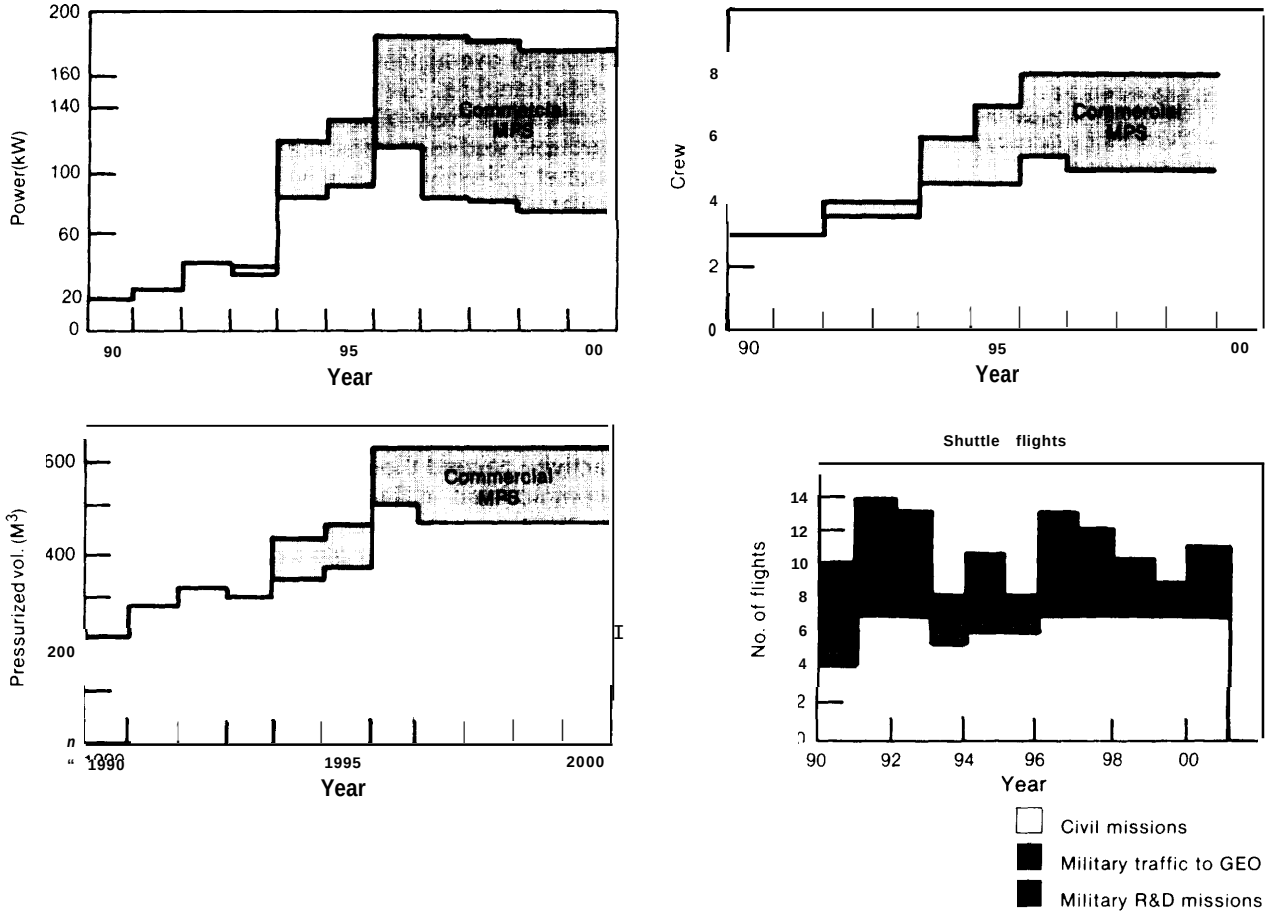

SOURCE **Based on** information **contained** in **the study** led by the General Dynamics Corp

reduced weight and lifecycle costs that it recommends. Some contractors identified standardization as contributing to cost containment; where no advance in technology appeared necessary, they suggested use of standard available equipment if practical, with space qualification as necessary.

Evolution of the Initial Capability

All of the contractor groups provided plans for evolution from the initial operational capability (IOC) to expanded infrastructure expected to become available by the end of the century. One example of infrastructure located in the 28.50 orbit is shown in figures A-7 (IOC) and A-8 (Evolved). The crew would increase from three to nine, the power would triple, the number of pressurized core modules would increase from one to five, and the servicing facility would quadruple in size. A similar evolutionary plan including tended co-orbiting and polar platforms and an ROTV is shown in figure A-9. A possible co-orbiting industrial platform is illustrated in figure A-1 O, and an initial tended polar platform could appear as shown in figure A-1 1. Core module commonality was suggested by essentially all contractor groups in order to promote production cost economy.

Role of a Human Crew

All contractor groups emphasize the importance of having a human crew. All consider that "sophisticated machines" (robotics, artificial intelligence, etc.) will not be able to provide the desired capabilities that could be provided by a human crew through the early 1990s. The benefits of having a human crew are summarized by one contractor group in table A-4.

Figure A-4.—infrastructure/''Space Station"

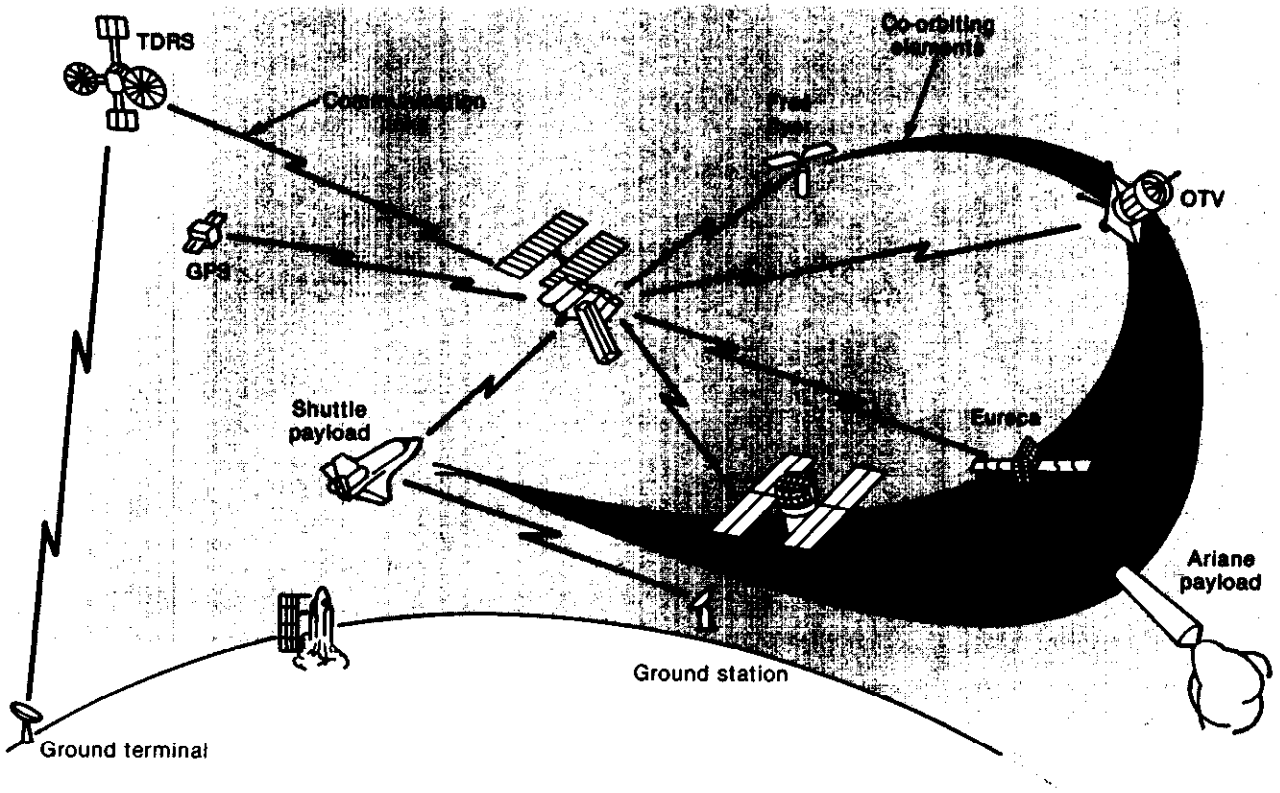

SOURCE: Based on information contained in the study led by Grumman Aerospace Corp.

Costs and Benefits

The cost estimates of design, development, test and evaluation, and production, of a "space station" complex have been made by each contractor group according to parametric models following a "Work Breakdown Structure" developed by the joint Industry Government Space System Cost Analysis Group. Since detailed designs were not part of the study, predominantly weight-based parameter estimates were used to arrive at a rough order-of-magnitude estimate for the costs of designing, building and deploying a complex.

Inasmuch as individual contractor groups proposed different combinations of modules and systems, considerable care is necessary in making comparisons of costs among them. **It** will suffice here to note that a "core" IOC space station in a 28.50 inclination orbit (i.e., command/habitation capability for a crew of three or four, power unit, and resupply logistics modules) was estimated to cost $3.3 billion to $4 billion (1 984 dollars). With appropriate attached pallets and modules to provide further observation, experiment, and servicing capability, the cost would be $4.5 billion to **$6** billion. With a crew of eight or nine, **60** kW of power to **users, two or three laboratory modules and expanded servicing facilities, plus two tended platforms–one co-orbiting and one in polar orbit–the estimated acquisition cost would be $7.5 billion** to $9 billion. This latter infrastructure array corresponds to the IOC suggested by the NASA Space Station Task Force (SSTF) in June 1983.

The above figures include those Shuttle launches required to place the elements in orbit, but generally do not include NASA support and program management expenses; OTA estimates that these latter costs would be another $1 billion to $2 billion if acquired by NASA in its usual fashion.

An additional ROTV capability cost has been estimated at $2 billion to $3 billion, including both the LEO basing facility and the operating vehicle. If a new fuel tanker vehicle were to be developed, it could cost approximately $1 billion.

The programmatic approach assumed by a number of contractor groups is that of the use of "protoflight" construction. One group compared the new method

Figure A-5.—One Contractor's Suggested IOC Central Complex Architecture

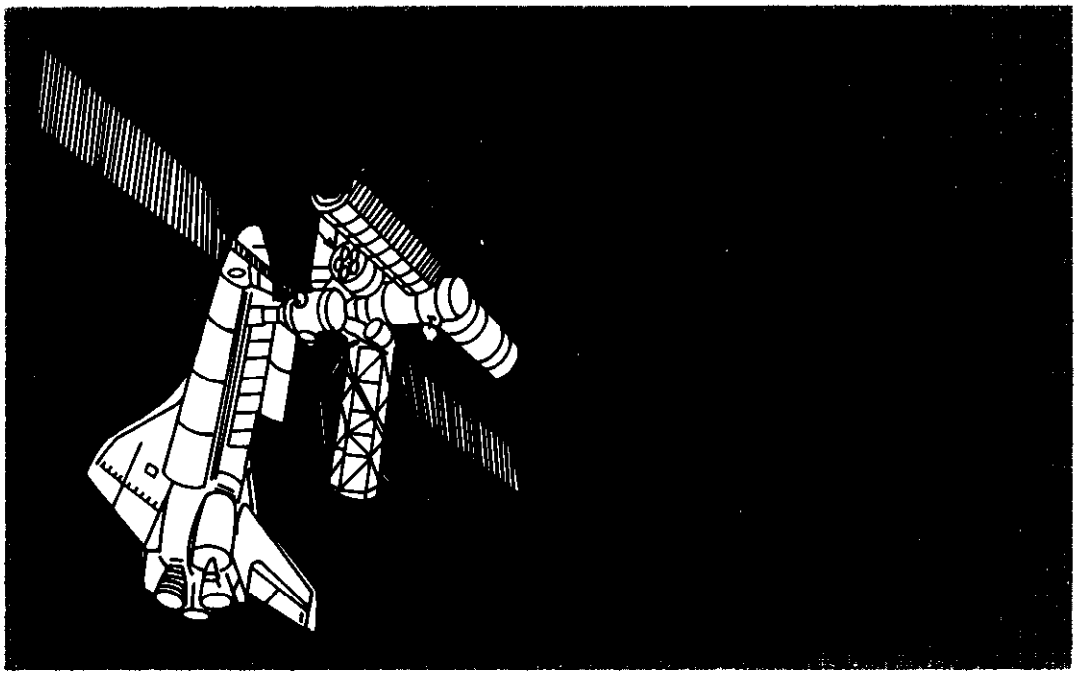

SOURCE: Based on information contained in the study led by Rockwell International.

Figure A-6.—A Suggested Central Complex Subsystem Organization

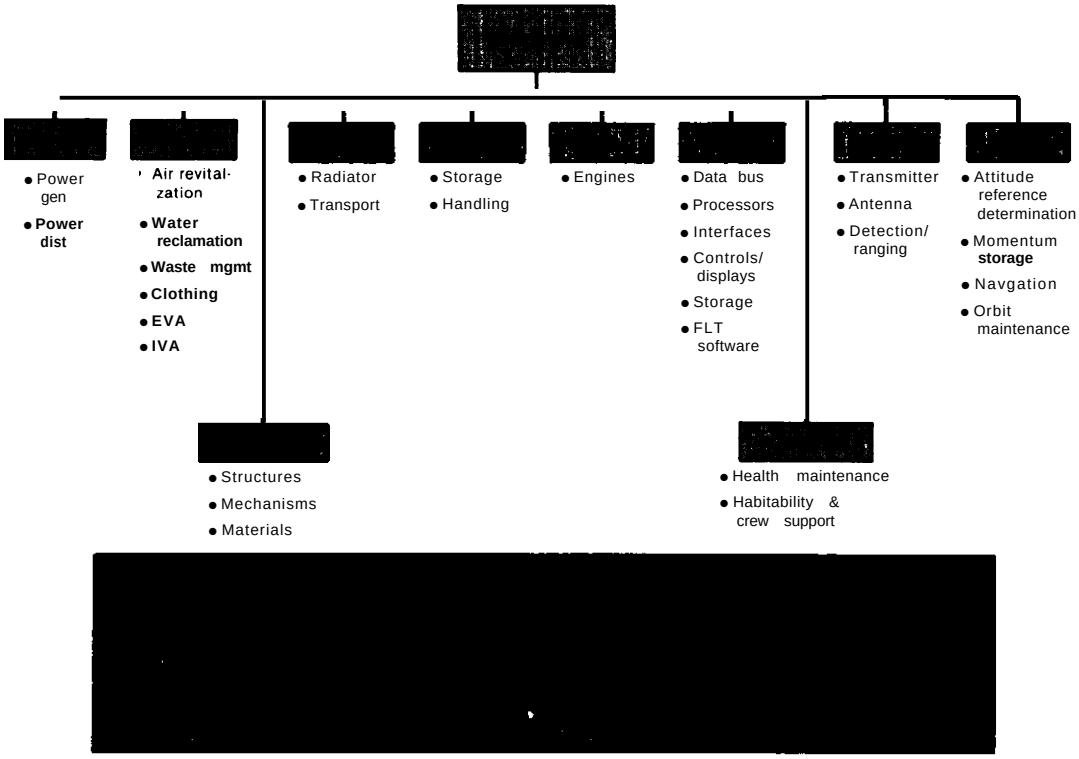

SOURCE Based on information contained in the study led by Rockwell International

Table A-3.—One Contractor's Suggested List of Subsystem Enabling Technology

Subsystem characteristics	Enabling technology
EPS . . . . . • Solar array	• Thin cell and higher efficiency
• NiH, batteries	• Cell manufacturing processes
• 180V dist.	• Battery development
	• High voltage component development
DMS . . . . . • Ada computer language	• Meeting existing Ada schedule[a]
• Fibre optics	• Low loss couplers[a]
• Advanced main memory with b/u battery	• Develop higher densities
• Bubble auxiliary memory	• Space qualifications and higher densities
COMM & TRKNG • S, K_u band subsystems	• Modulations/cod ing/bandw idth[a]
• Dish, omni-antennas	• Design/develop for application
• TDRS	• Acquisition/tracking/data rate[a]
• Simultaneous operation	• Radio frequency interference protection
EC/LSS . . . . . • closed loop	• Existing hardware with modifications
GN&C . . . . . • Attitude control	• Existing hardware with modifications
• Velocity control	• Existing hardware with modifications
• Stabilization	• Existing hardware with modifications
• Sensors	• Existing hardware with modifications

a 1983-86 technology and design techniques adequate
b Advance required for this technology

Key
EPS—Electrical Power Subsystem
DMS—Data Management Subsystem
COMM —Communication
TRKNG—Tracking
EC/LSS—Environmental Control and Life Support Subsystem
GN&C–Guidance, Navigation, and Control
TDRS—Tracking and Data Relay Satellite

SOURCE Based on information contained in the study led by the Grumann Aerospace Corp

Figure A-7.—One Contractor's Suggested IOC Central Complex

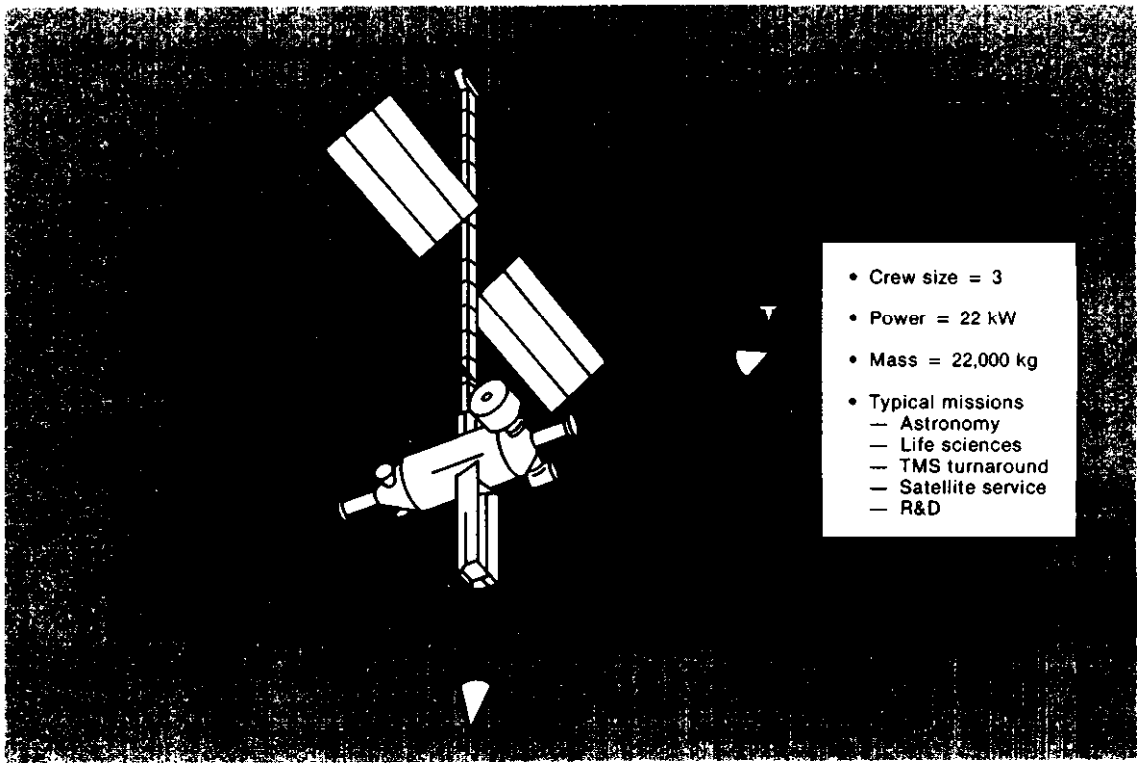

SOURCE Based on Information contained in the study led by Grumman Aerospace Corp

Figure A-8.—The Same Contractor's Suggested Evolved Central Complex

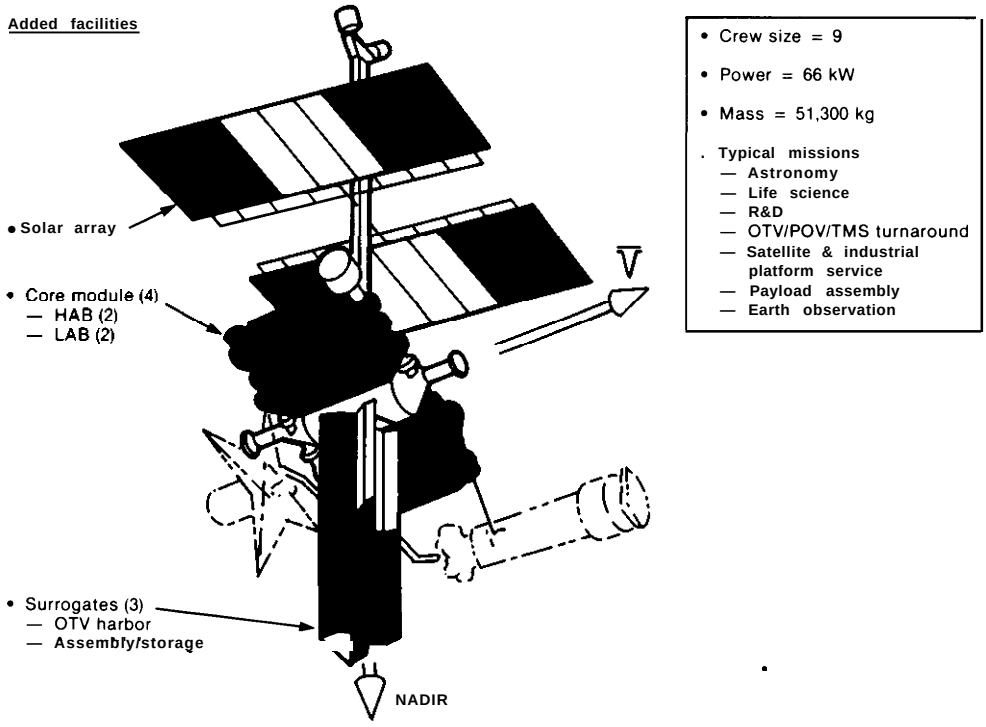

SOURCE Based on information contained in the study led by Grumman Aerospace Corp

Figure A"9.—One Contractor's Suggested Evolution Plan; LEO, 28.5°

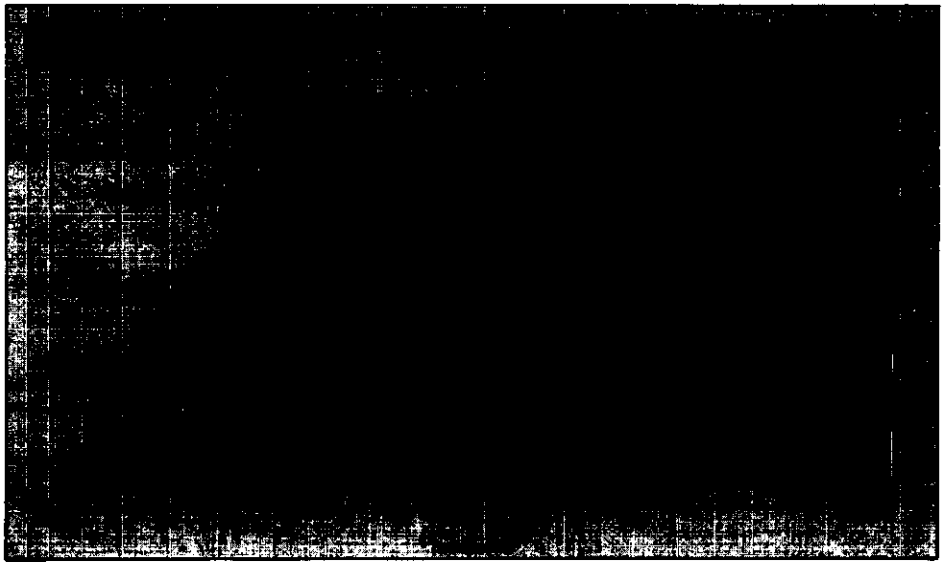

Key

TMS—Teleoperataor maneuvering system	ISTO—Initial solar terrestrial observatory
MMU—Manned maneuvering unit	ASTO—Advanced solar terrestrial observatory
RMS– Remote manipulator system	ASO—Advanced solar observatory
OTV—Orbital transfer vehicle	**LSS —** Large space structure

SOURCE Based on information contained in the study led by Martin Marietta Corp

Figure A-10. —One Contractor's Suggested Free-Flying Industrial Platform

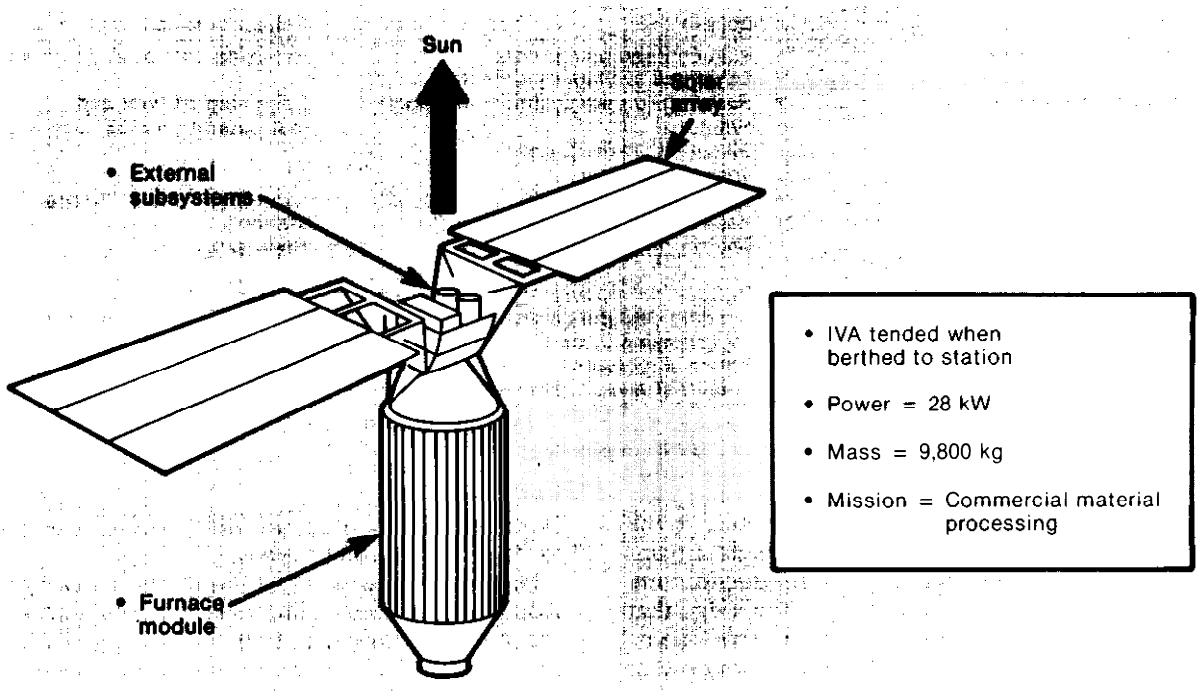

SOURCE Based on information contained in the study led by Grumman Aerospace Corp

Figure A-11 .–One Contractor's Suggested Tended Polar Platform (IOC)

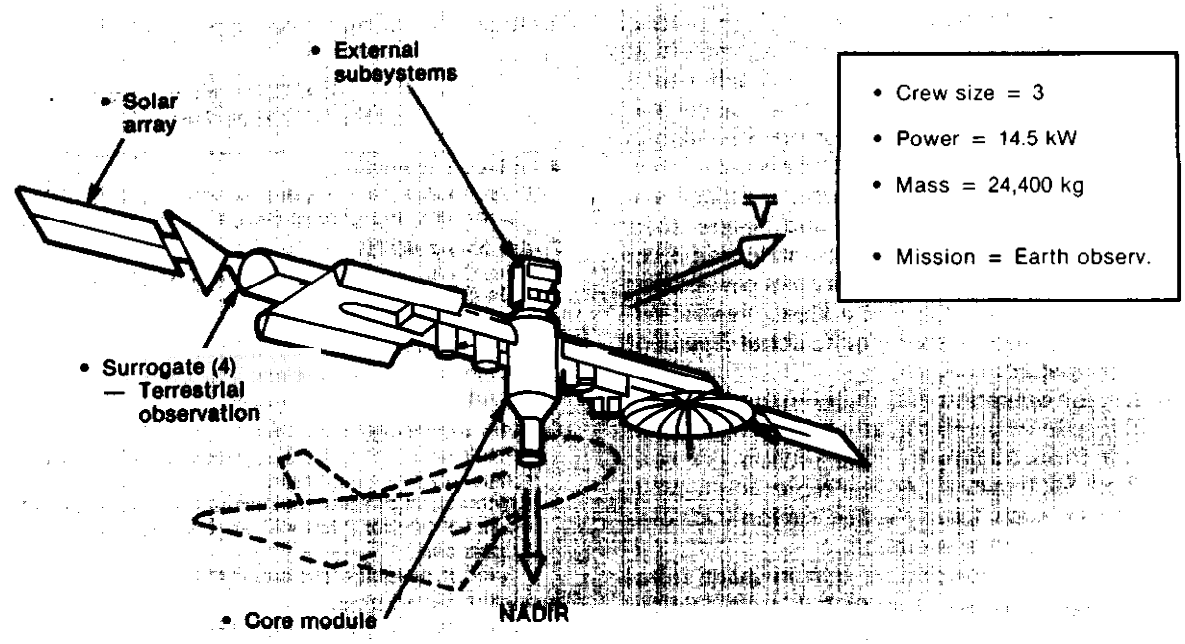

SOURCE Based on information contained in the study led by Grumman Aerospace Corp

Table A4.—One Contractor's Summary of Benefits of infrastructure Work Crew Presence

Function	Benefit	Related issues
Maintenance and repair	• Reduced equipment cost • Enhanced availability and life	• Realizing cost savings potentials
Real-time mission involvement	• Reacting to unexpected or transient " events • Discovery, insight, and understanding	• Designing activity and instruments to take advantage
Lab operations	• Difficult or impossible to automate[a] • Research progress not paced by Shuttle reflight schedule	• Lab equipment at "space station" • Crew skills
Construction, assembly, test checkout, modification of large systems	• Difficult or impossible to automate[a] • Simplify designs compared to complex deployment • Stiffen structures • Final test and correction in space	• Role of EVA • Design to realize benefits • Low-thrust transfer to final destination

[a]Within the predictable future.

SOURCE: Based on information contained in the study lad by the Boeing Aerospace Co.

with that used in the Skylab project. In contrast to the multiple qualification test, backup, and flight articles used then, they assume that the first production unit will be a flight article. Furthermore, they judge that the large size of modules permitted by the space transportation system (STS) would promote economy of scale. Finally, they judge that autonomous operation of the infrastructure would allow significant reduction in ground support compared to that of Skylab. These factors lead them to conclude that a "space station" could be acquired for significantly less cost per pound than was Skylab. Although it is unclear which precise spacecraft elements are included, their estimate was **$77,000/kg ($35,000/lb)** for Skylab (1984), while they projected $44,()()0/kg ($20,000/lb) for a "space station." Their estimate of the cost of the Spacelab is $220,000/kg ($100,0O0/lb), although this is higher than that of European **sources.** (Of course, a "space station" could be many times larger and heavier than either Skylab or Spacelab.) They estimate that it required 10 percent of the acquisition costs per year for Skylab O&M, and estimate that a life-cycle-cost designed "space station" would require about 3 percent per year to operate.

Estimates for operation and maintenance costs of all the aerospace contractor groups fall within the range from $150 million to $600 million per year (1984); about $400 million per year represents a mean value of these costs for a "space station" accommodating 8 to 10 crew members.

All contractor groups foresee that in-space infrastructure could provide operational performance, sociopolitical, and economic benefits. The first two are essentially qualitative in nature: appropriate activities would enable scientific and commercial communities to expand and improve their activities in space. Some of the technology advances would be expected to "spin off" to other areas.

Further, they expect that the performance benefits would accrue from an improved ability to perform in-space tasks, resulting in both an increase of quantity and improved quality of output. A number of these are listed in table A-5. In the research and technology areas, the cost of development programs could be reduced by large factors–some project it to be as much as 50 percent. Free-flying platforms could enable and promote many commercial projects. A base for maintenance and repair of in-space equipment on

Table A.5.—One Contractor's Summary of Performance Benefits

All mission operatlons:
• Decoupled from Shuttle launch schedule, payload priorities, and ground delays
Space based ROTV:
• 10,000 kg + useful payload into GEO
• On-demand capability
On-orblt assembly:
Ž Work crew can inspect, work around, and complement robotics and automation
• Shuttle size limits surmounted
On-orbit technology and R&D:
• Work crew can calibrate, operate, and modify
• True space environment
• Interaction of multiple disciplines and capabilities in a novel environment will produce synergistic advances
• Shorter development programs
Sclentific observations:
• Short lived experiments extended
• Work crew can monitor, intervene, replenish, and update

SOURCE: Based on information contained in the study led by the Grumman Aerospace Corp.

an as-needed basis, and scheduled activities such as resupply and/or removal of manufactured products, would be provided. The useful life of observation modules would similarly be enhanced by replenishment of consumables, change of experimental equipment items and their unscheduled repair.

As scientific knowledge is gained there is greater potential to enhance the quality of life. Basic research results provide some of the background to applied research, where economic and social benefits prospects become more visible. Improved space-based ocean, weather, and atmospheric research eventually could assist in our ability to locate and manage Earth resources, and monitor and control the physical environment. New pharmaceuticals as well as semiconductors and metal products could become available through space research and processing. Other social benefits envisioned by one of the contractors are indicated in table A-6.

"Space station' '-related economic benefits are hoped for in at least three ways: research, development, and production activities generally; satellite servicing; and orbital transfer vehicle operations. The contractor groups judge that the greatest benefits should flow from the latter.

Research and development cost reduction through use of infrastructure support is the most difficult to estimate, but most of the contractor groups concluded it could amount to hundreds of millions of dollars per year. One example is that of a lengthy science research project such as that involving the Shuttle Infrared Celestial Telescope Facility that anticipates some 250 days of use in space. If done in a series of 30-day extended-duration orbiter (EDO) trips, the associated operating expense is estimated to be about $3.6 million/day, while if accomplished in a continuous interval in a laboratory there, the cost is expected to decrease sharply, to $0.4 million/day. Materials science experiments done in space using a 30-day EDO might cost $2.9 million per experiment, compared with an estimated **$0.6** million per experiment if done in a long-term laboratory there. One estimate of the cost of pharmaceutical production, where a large portion of the expense is in the materials, is that of some $33 million/kg ($15 million/lb) if done in an EDO, compared to $18 million/kg ($8 million/lb) if done at a "space station." These kinds of cost benefits could be expected to continue throughout the complete "space station" life of some two decades and, if realized, could be a significant factor in encouraging the commercialization of space.

Were a Shuttle used to service an LEO satellite, the price per flight would approach some **$20** million, which is comparable to the value of the servicing for many such satellites. Using permanent space infrastructure services offers the possibility, in principle, of reducing this operational cost by perhaps one half.

Benefits expected of an ROTV are related primarily to its being based in space and its reusability. One of the study contractor groups estimated that a fully amortized ROTV service could be provided at a total cost of about $60 million for a 4,500 kg (10,000-lb) payload delivered from LEO to GEO. In contrast, a large expendable upper stage costs some $100 million or more, delivered with its payload to LEO. Thus, net economic benefit for the ROTV would be some $4o million to $5o million per flight, and 20 launches per year could provide a total savings of $1 billion/year.

Figure A-1 2 illustrates the judgment of one contractor group regarding the various kinds of benefits expected of the use of a "space station."

Regardless of when a positive economic payoff might commence—always assuming that it does—a "space station" could be a powerful capability multiplier. Of course, one of the most important benefits would arise from the conduct of activities which would be impossible to conduct without it, and activities that we cannot conceive of now.

Table A-6.—Some Social Benefits Suggested by One Contractor

. High-technology—a national goal
•Focus for engineering/science education
•Lunar and beyond exploration
• International cooperation
•Unique, sophisticated development facility
• New communication services
•New commercial products and industries — medical, semiconductor
•New therapeutic, diagnostic techniques
•Enhanced national security

SOURCE: Based on information contained in the study led by the Grumman Aerospace Corp.

Conclusions

The aerospace contractor groups that studied potential needs and desires for new infrastructure identified hundreds of activities in the areas of space science and applications, commercialization, and technology development that could be carried out utilizing long lifetime infrastructure with accommodation for a crew to live and work in space. The vast majority are activities that are possible only with a crew supported by the infrastructure, or ones that would be enhanced by their presence: they would maximize R&D performance, especially in the life and materials sciences, and contribute to economic benefits. No single activity, or even a few, would be sufficient to justify its establishment, but the large total number

Figure A-12.–One Contractor's Summary of Infrastructure ("Space Station") Payoffs

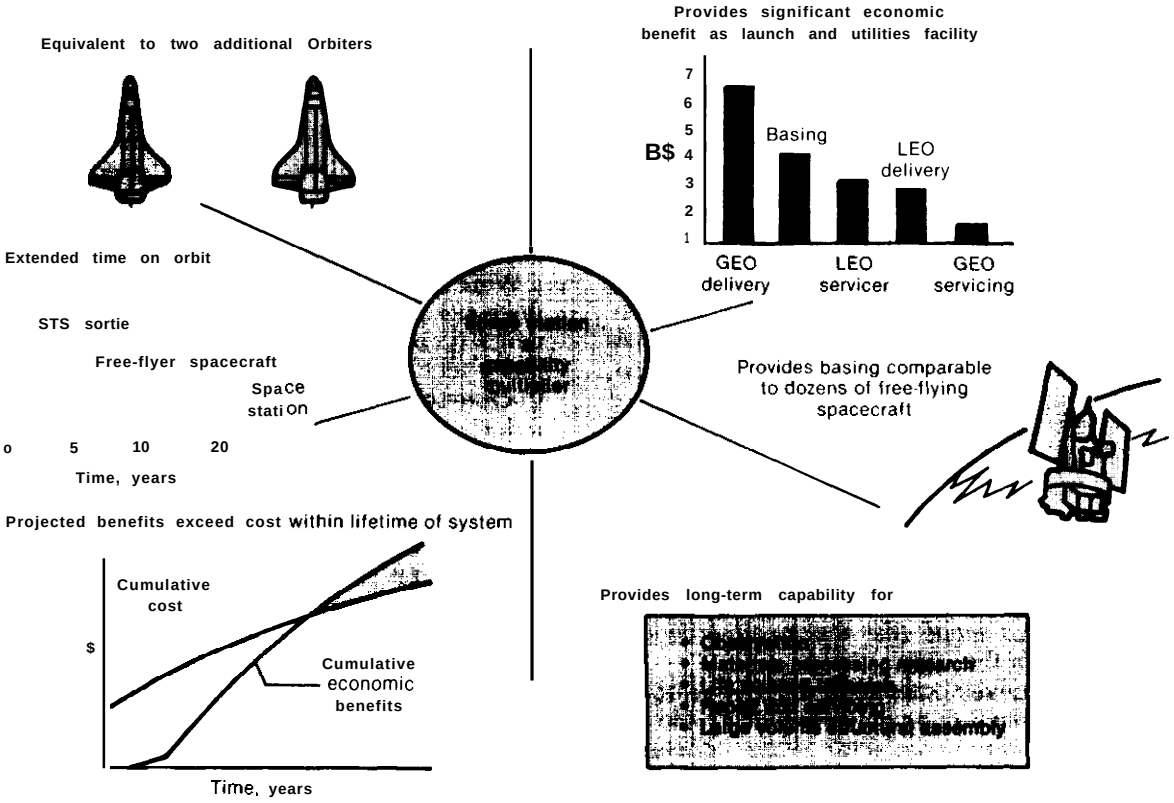

SOURCE Based on Information contained in the study led by Martin Marietta Corp

contributing in all functional areas, in the judgment of the contractor groups, provide reasons to acquire an extensive permanently inhabited space infrastructure.

All study participants see significant benefits—including such intangibles as national prestige, leadership in space, and economic, performance, and social benefits connected with scientific research, commercialization, and new technology. Reflecting the broad range of advantages projected, contractors differed as to which aspect would be most significant. Planetary probes, a Lunar settlement, and human exploration of Mars are considered of great significance in terms of longer range goals.

It was the unanimous recommendation that the first infrastructure units should be placed in a 28.50 inclination low-Earth-orbit. All were envisioned as new technology designs and were projected as allowing evolutionary growth with increased size and capability phased in over an initial assembly period of about 5 years. The smallest unit with adequate volume to house a crew of three for extended stays and with minimum experimental and research facilities would consist of a command/habitat module connected to a solar-array energy module, plus two logistics modules (for resupply by Shuttle flight). They estimated such an initial unit's acquisition cost to be from $3.3 billion to $4 billion (1984). A later complex accommodating eight crew members, 60 kW of power to users, two laboratory modules, several external payload attachment points and satellite service pallets, and two tended platforms (co-orbiting and polar) were estimated to cost $7.5 billion to $9 billion. An ROTV capability could cost as much as $3 billion more. And further expansion of "space station" components and capabilities were contemplated into the 21st century.

These contractor costs accumulate to $10 billion to $12 billion for the development of the contractor-suggested evolved complex over an approximately 9-year period to the mid-1990s; NASA support and program integration expense could be another $2 billion to $3 billion. The contractor "evolved" system is roughly comparable to the summer 1983 NASA IOC

but with the addition of full ROTV capability. (Further additions that enter, generally, in NASA's future plans to the year 2000 would add another $6 billion.)

The contractors point out that, although quite large, these expenditures may be compared with the approximately $60 billion (1 984) invested in the Apollo program and the estimated equivalent $56 billion spent for the Salyut-Soyuz project (reported by *Interavia* for February 1982), each over a somewhat comparable period of time. While the study contractor groups concluded that these estimated costs could be contained within a NASA budget projection that maintained today's level of appropriation over a 10-year period, they recognize that some cost-offsetting economic return on this public investment is necessary.

While the prospects for cost containment and other intangible benefits are considered to be promising, two operational factors are pointed out as the main sources of large, quantifiable economic benefits. One is the use of an LEO-based ROTV system to transport equipments between LEO and higher orbits, including GEO. The other relates to the fact that appropriate infrastructure would result in maximizing the STS load factor for each flight. The contractors project a reduction in costs for these activities of up to $10 billion over the system lifetime. Income could result from increased commercial space development fostered by the lower cost of space activities and faster conduct of research activities generally.

A final comparison may be made regarding other long-duration "space stations" of the past and present: Skylab and Salyut. As orbiting spacecraft accommodating crews, at first glance they appear to be fundamentally similar. But, while all three could function as space test and laboratory facilities, the contractors note that the proposed "space station" is the only one providing for satellite servicing. And neither Skylab nor Salyut offered the assembly and transport harbor envisioned for a new "space station. "

Major Findings of "Mission Analysis Studies" of Other Countries

Related studies were also requested of potential foreign participants in any "space station" program. In terms similar to the eight U.S. aerospace contractor group studies, the European Space Agency (ESA), the National Research Council of Canada, and a Japanese Space Station Task Team (representing numerous organizations in Japan interested in aerospace activities) prepared studies. In addition, individual companies or groups of companies from these regions presented reports of elements or subsystems of special interest to them. Among these were Dornier of Germany, Aerospatiale of France, Spar Aerospace of Canada, and a group of European companies consisting of AEG, British Aerospace, Fokker, and CIR.

European Space **Agency**

The member nations of the European Space Agency (ESA) authorized a study team which was directed by MBB/ERNO and included Aeritalia, Matra, British Aerospace, Dornier System, SABCA, BTM, and KAMPSAX. It examined European interest in providing elements and the likely consequences of utilizing a "space station" having crew capabilities.

Especially emphasized was ESA's desire to participate actively in the program, both in the design and construction of components (e.g., logistics modules, free-flying platforms, laboratory modules, and equipment and servicing pallets) and in the later operations (e.g., access on a continuing basis for experiments, identification of payloads and operational requirements, and provision of crew members).

The study assessed participation as offering potential benefits to European nations in scientific, technological, industrial, economic, operational, and political areas. European contributions were seen as based upon their own set of potential user interests, on systems with clean interfaces with other infrastructure components, and on the utilization of developed European technologies (specifically Spacelab). Perhaps ESA could provide "dedicated modules" with preferential conditions for European users to compensate for European investment. Participation would be particularly cost effective to ESA if all of the infrastructure were available to it without a major program on their part to obtain it, so that it would be complementary with rather than competitive with European unmanned systems.

The study team identified about 130 activities that, conceptually, European countries desire to carry out in space. Similar to the projections of the U.S. contractor groups, they included materials processing, life sciences and bioprocessing studies, space science and applications, and technology development. An innovative use was that of entertainment, such as filming of space movies and creation of new artistic forms in space.

ESA recognized the possibility of free-flyers as a supplement to a "space station" for Earth observation and space science, but noted the advantages (over an expendable booster) of the Shuttle and additional in-orbit infrastructure; this combination would involve less costly hardware, provide return transportation as needed, and obviate the necessity of bringing a complete spacecraft back to the surface for servicing.

The need or benefit from human involvement in about 70 percent of the proposed activities was stressed. Among these were life sciences experiments and the servicing of satellites such as the EURECA vehicles that are under design in Europe. Power needs identified for users were in the range of 20 to 30 kW.

Canada

The National Research Council of Canada expressed a high degree of interest. The Canadian report identified about 37 potential uses and desires, largely in the areas of remote sensing and technology development. Most could be carried out at an orbit inclination of 28.5° with 5 kW of power. Many uses would benefit from having a human crew, and a Canadian astronaut as a payload specialist was proposed.

Continued development of the SPAR Remote Manipulator System is anticipated along with new work on associated construction and servicing subsystems. Also, Canada would develop a space vision system to facilitate ranging and docking, and consideration is being given to advanced remote sensing subsystems.

In a separate report, Spar Aerospace Limited outlined its capabilities in high-power solar arrays and indicated interest in building one of a modular type; various concepts were given but no cost estimates.

Japan

The Japanese Space Station Task Team reported long-term, across-the-board interest. While few specifics regarding individual experiments were given, they anticipated uses for astronomy, life sciences, materials processing, technology development, Earth observation, space energy research, and large communications satellite assembly. The majority of these would require or benefit from human presence, with long time on orbit and human judgment and/or operating capability as important factors. They anticipate that space activities would involve two general phases—one up to the middle 1990s to develop methods to be capitalized on thereafter.

The Japanese would be interested in developing almost any or all elements of the space infrastructure, from attached modules to the ROTV. They suggest starting with simple standard modules and enlarging the capabilities for various additional needs.

Individual Foreign Company Interests

Extensive studies were made by several European companies or industrial groups to augment the reports discussed in the previous sections of this chapter. A submission of Spar Aerospace Limited has already been discussed in the section on Canada; others are presented here.

DORNIER

Dornier of Germany investigated several conceptual infrastructure elements for ESA which have an obvious relation to a potential later participation of Europe in a U.S. program. The conceptual elements analyses included:

1. ‘requirements and technology aspects for space pointing systems;
2. designs and capabilities of heat pipe radiators; and
3. life sciences experiments and development of life support systems.

AEROSPATIALE

Aerospatiale of France studied the following areas:

1. General infrastructure concepts, along with their evaluation of the eight U.S. contractor group architectural designs. The contractor group studies were noted as having numerous advantageous design features, but in each case several difficulties are foreseen.
2. Concepts for a Reusable Orbital Transfer Vehicle were studied with special consideration of its fuel storage arrangements.
3. Designs of a Teleoperator Maneuvering System were-studied. It would incorporate solar arrays to provide electrical power.

AEG, BRITISH AEROSPACE, FOKKER, CIR

This group of European companies analyzed power sources employing solar energy arrays, comparing planar and concentrator designs and various supporting structure arrangements. A flexible-blanket, retractable, fold-out array was favored for further study. This approach also lends itself to stepwise growth to power levels as great as 250 kW.

MBB/ERNO, AERITALIA, BRITISH AEROSPACE, DORNIER SYSTEM, SABCA, BTM, KAMPSAX

MBB/ERNO, the leader of this group of companies, was also the principal contractor for the general ESA “space station” study. Thus, much duplication occurs in this report of the summary appearing earlier in this chapter.

Considerable emphasis was put upon the possibility of the Spacelab and EURECA spacecraft being used as infrastructure elements.

Modifications of Spacelab could provide combined habitation/laboratory functions in conjunction with an EDO vehicle. A crew of three could be accommo-

dated, but this would result in a decrease in laboratory space compared to the present Spacelab design. EURECA would first be used as a Shuttle-tended unpressurized free-flying platform. Later development of a resource/service module incorporating solar electrical power, environmental control, and life support systems would enable an increased capability in association with the developed Spacelab and the EURECA platform. Ultimately these elements could, with others, become components of a larger, more permanent space infrastructure.

Also, a Spacelab with its own solar array could be a free-flying experiment module which could be tended by a crew that would visit for a few hours at a time.

They also indicated a European consortium was prepared to develop and produce an ROTV and its hangar facility, a Teleoperator Maneuvering System (labeled by Matra as a Teleoperated Service Vehicle), and the satellite service and assembly infrastructure segments.

No specific estimated costs were given. However, six items (a free-flying, tended, experiment module, a logistics module, a free-flying platform, an unpressurized logistics resupply carrier, a teleoperator maneuvering system, and a thermal control technology development program) could be achieved over a 1s year period at funding levels aggregating about $1.6 billion (1984). While direct comparison with estimates made by U.S. aerospace companies is difficult because of numerous design and capability differences, this cost could be lower than, but of the same order of magnitude as, the estimate for a corresponding set of modules by the American contractors.

The study observed that pressurized modules would sometimes be needed for experimental reasons even if human habitation were not a consideration, and this would affect not only the design but also the operation of such modules.

The study team recommended that development should proceed in phases with the initial phase using proven existing elements. Automated processes should be preferred for routine work, but cost effectiveness must always be considered, inasmuch as automation can be costly.

This study, representing companies from many European countries, was oriented to identifying potentially produceable infrastructure elements, not overall concepts. This emphasized Europe's intention to play an active role in development and operation, not simply provide hardware. The candidate elements would satisfy their user needs and have clean interfaces with the other elements of space infrastructure. This would not only put Europe in a position to operate their facilities, but also enable them to be offered to the United States, thus allowing a sharing of resources and reducing the financial involvement of participating nations,

Summary

The universal attitude of all non-United States organizations is one of enthusiasm to participate in a space infrastructure program, not just to develop and build elements of it, but to be active as partners in the operation and use of its facilities, especially the elements that they would produce. Many of them look upon it as fundamental to their future role in space and therefore want long-term understandings or agreements with the United States. The characteristic note is one of desired international cooperation in which there is true participation throughout rather than simply shared eventual utilization.

NASA Synthesis of the "Mission Analysis Studies"

NASA assembled the United States and foreign mission analysis reports relating to a civilian "space station" and held a workshop during May 1983, to synthesize the results. Of the hundreds of projects and experiments proposed by potential users, the workshop of the Requirements Working Group and the SSTF Concept Development Group established a minimum time-phased "mission set" (for the decade from 1991 to 2000) of 107 specific space activities, plus four generic industrial service activities (e.g., satellite servicing).

Of the 107, 48 were categorized under science and applications, 28 under commercial, and 31 under technology development. The four additional commercial opportunity activities would be continuously available as needed for industrial servicing.

The NASA working groups judged the list of activities to be realistic in terms of maturity of experimental and program planning, scientific need, and progress of technology development. The programs identified for the first 3 years were particularly well validated in their **view.** At the end of the workshop, their recommendations of the minimum capabilities required at IOC were as follows:

1. Space station central complex at 28.50:
   - 55 kW of **average electrical power** to users;
   - Two 60 m^3 laboratory modules (for materials processing in space and life sciences);
   - 5 person crew (4 for payload operations);
   - 300 MBPS data rate; and
   - 4 to 6 payload attachment mounts,

2. Polar platform (unpressurized):
   - 12.5 kW of average power;
   - 300 MBPS data rate; and
   - 4 payload attachment mounts.

Nonaerospace Industry Interest in Space Use

NASA contracted with the Booz-Allen & Hamilton and Coopers and Lybrand consultant firms to communicate with a variety of nonaerospace companies to ascertain (and at the same time stimulate) interest in the use of space facilities for commercial purposes. Up to March 1984, they discussed prospects with upwards of so companies of which more than 30 expressed active interest. To most of these firms the concept of doing business in space is utterly foreign; a great deal of exploring with them is necessary to surface possibilities of products or services that might be compatible with their commercial activities and offer promising opportunity of eventual financial success.

Booz-Allen & Hamilton reported to a conference in mid-1 983 that most of the companies moving toward negotiation of Joint Endeavor Agreements with NASA are well-known U.S. industrial firms (one with an announced agreement is the 3M Corp.) but several are from the small business sector or Europe. Interest is concentrated in such fields as chemicals, metals, glasses, communications, and crystals. Another type of enterprise being actively pursued is a fee-for-service laboratory in space. Among the half-dozen companies actively investigating space experiments, most are interested in crew-tended operations rather than remote or automated procedures.

Since the administration's authorization of a "space station" program, interest among several companies has become more firm, according to those involved in the study; the 3M Corp. has recently announced a Memorandum of Understanding with NASA to begin space experiments on inorganic chemical materials and on thin films. An executive with one company with experience in aerospace has indicated that the Government's funding toward eventual acquisition of permanently inhabited space infrastructure is a necessary (but not sufficient) condition to convince industries that the United States is serious about space commercialization. He considers that, in addition, a long-term commitment to supporting the commercialization effort is what will suffice to bring the private sector into full participation.

Some industry observers point out that the oftenmentioned example of how communications satellites became a commercial success is not necessarily relevant to today's efforts at space commercialization in other areas. First, there was already a clear market for the improved communications services which a private organization was created to provide, something which is not clearly evident today is such areas as materials processing in space or remote sensing. Second, the enabling legislation to move it forward to reality was motivated by the need to create an international system, while today's commercialization issues concern primarily U.S. domestic businesses.

The barriers that Booz-Allen & Hamilton found to wider interest in commercial space enterprises were technical, economic, and government-related. First, technical knowledge of the space environment by many industries is very scanty, while in general there are too few answers as yet to the behavior of many kinds of materials in space. Second, economic risks associated with timing and cost of space experiments are looked at by private enterprise from the standpoint of the expected long payback period (1 O or more years). Third, the maze of government bureaucracy to be faced to obtain approval on such things as Joint Endeavor Agreements is deterring some, especially small companies, from entering into space business. Booz-Allen & Hamilton is recommending establishment of some form of permanent intermediary to assist nonaerospace companies in contacts with NASA and other Government agencies.

Appendix B

THE EVOLUTION OF CIVILIAN IN-SPACE INFRASTRUCTURE, I. E., "SPACE STATION," CONCEPTS IN THE UNITED STATES*

Introduction

Almost from the first time humans thought about leaving the surface of this planet, one theme has been the creation of some form of human outpost in space. In fiction, and during this century in increasingly specific engineering detail, the "space station" concept has been extensively discussed. In one of the two major space-faring nations, the Soviet Union, a fairly rudimentary but still very capable "space station" program, centered on the Salyut spacecraft, has been ongoing since 1971. In the other space power, the United States, the development of some kind of permanent presence i n space to support space activities i n an efficient and effective manner, is now u rider way.

This appendix reviews those past occasions, with particular attention to the rationales offered at various times for space infrastructure development and to the differing concepts which have been proposed. History can cast a useful perspective on current policy alternatives, which, after all, reflect the continuation of a long-running debate over the justification for infrastructure of various characteristics, size, and cost. By sketching the earlier points in the history of the U.S. space program at which a "space station" has come under serious consideration as a major project, only to be rejected in favor of some other alternative, it may be possible to identify what is now different, and what is not, that might now lead to a more favorable evaluation of various proposals.

Earliest Space Infrastructure (i e., "Space Station" Concepts)[1]

The first proposals for "space stations" conceptually akin to modern schemes appeared in the late nineteenth century. Konstantin E. Tsiolkovsky's Dreams ***of Earth and Sky and the Effects of Universal Gravity*** (1895) and Kurd Lasswitz's ***On Two Planets (1897)*** set the tone by picturing "space stations" as stepping stones for trips by people to the planets, especially Mars. Like these earliest contributions, succeeding proposals included fiction and nonfiction, humanism and science, practicality and fancy. They were sparked by an unbridled enthusiasm for spaceflight and a firm belief that exploration of the planets was human destiny. Most were informed enough to realize that direct ascent from Earth to interplanetary space was not technical y attractive. "Space stations" were way stations, logistics depots on the way to the planets.

Tsiolkovsky in 1923 wrote of a station placed "at a distance of 2,000 to 3,000 versts (a Russian unit of distance equal to 0.6629 mile) from the Earth, as (an artificial) Moon. Little by little appear colonies with supplements, materials, machines, and structures brought from Earth." In his 1923 book, ***The Rocket Into Interplanetary Space,*** space pioneer Herman Oberth first described an orbiting manned satellite as a "space station, " and proposed that it could be used as an Earth observation site, world communications link, weather satellite, or orbital refueling station for outward-bound space vehicles.

The early proposals resulted in more words than hardware. The only group of "space station" advocates to make progress toward realizing their dreams were the members of the German Rocket Society, among whom the "space station" concept became common currency.[2] But even they could only muddle along on rocket research with the limited private funds at their disposal until military support prompted by the approach of World War II brought on the financing necessary for research and development that would lead to spaceflight. Wernher von Braun and his associates built the v-2 rocket for the Wehrmacht in order, they said later, to achieve their real goal—the development of spaceflight. Whatever their motives, after the war they brought to the United States the most advanced rocket technology in the world and schemes for "space station" and interplanetary flight that had been sparked and nurtured by the romantic enthusiasm of the first half of the 20th century.

---

*This paper was prepared for OTA by John Logsdon, based in part on original material by Alex Roland,

[1]Much **of this section is based on papers by Frederick** 1. **Ordway,** III, **"The History,** Evolution, **and Benefits of the Space Station Concept, " presented to the** XIII International Congress of the History of Science, August 1971; and Leonard David, "Space Stations of the Imagination," ***AIAA*** *Student Journal* vol ***20, No, 4,*** **winter 1982/1 983.**

[2]**Barton** C. **Hacker, "And Rest As On a Natural Station: From Space** Station **to Orbital Operations in Space-Travel Thought, 1985-1951 ," unpublished paper, NASA History** Office **Archives (hereafter NHOA), Washington, DC,** p **9.**

In the United States in the years immediately following World War II, both scientists and military leaders recognized that the ability to launch payloads into orbit would have important implications for their particular fields of activity. In considering the various uses to which space might be put, several lines of development emerged. First, to the concept of "space stations" with human crews as stepping stones to the planets was added the less dramatic but more realizable concept of relatively small Earth satellites, not to send men to other celestial bodies but to perform practical, Earth-oriented tasks in orbit: communication, scientific research, reconnaissance, etc. j

Second, further consideration led some to conclude that bases in orbit were "not necessary for most activities envisioned there: rendezvous of the rockets and satellites themselves is sufficient to most purposes. "[4] But this perspective and its appearance in the literature did nothing to deter a third line of development: the elaboration of earlier concepts of "space stations, " perpetuated in this era most spectacularly by Wernher von Braun's concept of a toroidal "space station. " Von Braun's ideas received wide publicity in a Col*lier's* magazine special titled "Man Will Conquer Space Soon." Von Braun claimed that "scientists and engineers now know how to build a station in space that would circle the Earth, 1,075 miles up . . . .If we do it, we can not only preserve the peace but we can take a long step toward uniting mankind."

Von Braun's plan called for a triple-decked, 25-ft-wide, wheel-shaped station in polar orbit which would be a "superb observation post" and from which "a trip to the Moon itself will be just a step." The main element of space infrastructure would be accompanied by another: a free-flying observatory that would be tended by a crew.

Von Braun noted that the station would not be alone in space; "there will nearly always be one or two rocket ships unloading supplies near to the station. " "Space taxis" or "shuttle-craft," as von Braun described them, would ferry both people and materials from the rocket ships to the station itself.

Von Braun noted a number of uses for a "space stat ion":

- "a springboard for exploration of the solar system";
- "a watchdog of the peace";
- a meteorological observation post;
- a navigation aid for ships and airplanes; and
- "a terribly effective atomic bomb carrier. "

This detailed description was only one of the many concepts developed in the years after World War II but prior to the 1957 launch of Sputnik and the formal beginning of the Space Age.[6] Even before the United States had an official civilian space program, most of the possible uses of a "space **station" had** been identified by visionaries who dreamed of space travel,[7]

The Response to Sputnik, 1957-61[8]

Sputnik changed the context for U.S. space activities. In spite of President Eisenhower's attempts to avoid it, a space race with the Russians was on. All kinds of proposals that would have been laughed from the stage in earlier years were put forward in deadly earnest. Many at home and abroad perceived the United States as having fallen behind the Soviet Union at least in this sophisticated technology, and nothing but a crash program would do.

Having people in space is the most complicated and the most dramatic of space activities, and it quickly became the focus of the competition. News that the Soviets were considering a "space station" of the von Braun variety fanned the enthusiasm in the United States for a like undertaking and underlined the military overtones of the space race.[9] As one observer put it, "the rapid and timely completion of the Military Space Station will do much to bring about space ***supremacy*** (italics added) for America and lay the scientific foundation for the aerospace power of the future."[10]

But this was not to be. In spite of all that the military had done to pioneer research in spaceflight, President Eisenhower opted for a civilian space agency, the

---

[3] R. Cargill Hall, "Early US. Satellite Proposals," *Technology and Culture,* vol. 4, 1963, pp. 41 O-434; and Arthur Clarke, "Extraterrestrial Relays: Can Rocket Stations Give Worldwide Coverage?" *Wireless Wodd,* October 1945, pp 305-308.

[4] Harry E. Ross, "Orbital Bases, " *Journal of the British Interplanetary Society, vol. 9,* 1949, pp. 1 -19; Kenneth W. Gatland, "Rockets in Circular Orbit, " *Journal of the British Interplanetary Society, vol. 9, 1949,* pp. *52-59.*

[5] Wernher von Braun, "Crossing the Last Frontier, " *Collier's,* Mar, 22, 1952, pp. 25-29, 72-74.

[6] The detailed description in the von Braun article should not be confused with a detailed design. For two early detailed designs, see: 1) "Assembly of a Multi-Manned Satellite, " Lockheed Missile and Space Division, LMSD 48347, Dec. 18, 1958 (available in the archives of the National Air and Space Museum of the Smithsonian Institution); and 2) "A Modular Concept for a Multi-Manned Space Station, " in the IAS *Proceedings of the Manned Space Stat/on Symposium,* Apr. 20-22, 1960, pp. 37-72.

[7] See, for example, the IAS report, op. cit.

[8] This history is recounted in John M. Logsdon, *The Decision to Go to the Moon Project Apollo and the National Interest* (Cambridge, MA: MIT Press, 197o), ch. 2; and W. David Compton and Charles D. Benson, *Living and Working in Space: The History of Skylab* (Washington, DC: National Aeronautics and Space Administration, 1983), SP-4208, ch. 1.

[9] "Soviet Scientist Sees Need for Manned Station in Space, " *Aero/Space Engineering, vol.* 17, September 1958, p. 27.

[10] Lowell B. Smith, "The Military Test Space Stat Ion," *Aero/Space Engineering, vol.* 19, May 1960, p. 19.

National Aeronautics and Space Administration (NASA), and entrusted it with a manned mission. And that mission would be a modest one, at least at the start. Project Mercury would demonstrate that a person could fly in space; until then there would be no talk of "space stations" and manned flight to the Moon and planets.[11]

However, as the new space agency began operations, NASA leadership set the development of a long-range plan for the agency's first decade as a high-priority task. A "space station" was a leading candidate for a post-Mercury goal. The House Space Committee in early 1959 concluded that stations were the logical follow-on to Mercury, and von Braun (then still working for the Army) presented a similar view i n his briefings to NASA, At this time, the German rocket team had developed an elaborate scheme, called Project Horizon, for Army utilization of space, including military outposts on the lunar surface.

In the first half of 1959, NASA created a Research Steering Committee on Manned Space Flight, chaired by Harry Goett. At the first meeting of this committee members placed a "space station" ahead of a lunar expedition in a list of logical post-Mercury steps. In subsequent meetings, the debate centered on the question of whether a "space station's" value for scientific research, especially in the biomedical area, outweighed the excitement of a lunar landing goal.

While some members of the committee argued that "the ultimate objective of space exploration is manned travel to and from other planets, " the representative of one center argued for an interim step, since "in true spaceflight man and the vehicle are going to be subjected to the space environment for extended periods of time and there will undoubtedly be space rendezvous requirements. All of these aspects need extensive study . . . the best means would be with a true orbiting space laboratory that is manned and that can have a crew and equipment change. " [12] Ultimately, the Goett committee recommended that a lunar landing be established as NASA's long-range goal, on the grounds that it was a true "end-objective" requiring no justification in terms of some larger goals to which it contributed.

These recommendations were not immediately accepted. For example, at an August 1960 industry briefing on NASA's future plans, George Low presented a scheme in which a manned lunar landing and creation of a "space station" were given equal treatment as long-range goals of the NASA program; Low told the conference that "in this decade, therefore, our present planning calls for the development and demonstration of an advanced manned spacecraft with sufficient flexibility to be capable of both circumlunar flight and useful Earth orbital missions. In the long range, this spacecraft should lead toward a permanent manned "space station. "[13] Low also announced the name of the advanced spacecraft program, then aimed both at the Moon and at "space stations"; it was to be called "Project Apollo."

The Apollo Anomaly

Once again, however, external events intervened to upset the orderly course of events envisioned by those planning the country's future in space. President Kennedy came into office in 1961 committed to reassert America's vitality and resolve in the war of nerves with the Soviet Union. When, in April 1961, the Russians tested the United States once again by launching the first man into space, Kennedy ended his early indecisiveness on the space program and in 1961 committed the country to the race to the Moon. This decision, the most momentous in the history of the American space program, was made for reasons of prestige and politics.[14] It determined the future of NASA and its programs more thoroughly than any other decision before or since. That influence operated on two levels.

First, and perhaps most importantly in the long run, the style and public perception of the Apollo commitment made it something of a model for all future space proposals. President Kennedy made the decision quickly but not precipitously. He consulted his staff and NASA and chose the Moon landing as the most dramatic and most feasible of the suggestions for demonstrating U.S. ability to best the Soviet Union in high-technology competition. He presented the idea in a speech before an unusual joint session of Congress, in which the new President outlined his plans for fulfilling his campaign promises of getting the United States moving again.

"Now is the time," said Kennedy, "to take longer strides—time for a great new American enterprise—time for this nation to take a clearly leading role in space achievement, which in many ways may hold the key to our future on Earth. "[15] In a moving and uncompromising challenge, the President called on ***Con-***

---

[11] Loyal s Swenson, jr., James M, G rimwood, and Charles C. Alexander, *This New Ocean **A History of Project Mercury,*** **NASA** SP-4201 **(Washington,** DC:National **Aeronautics and Space** Administration, **1966).**

[12] Bruce Loft **I n,** as quoted in the Minutes of **the Research** Steering Committee **on Manned** Flight, **meeting** of **May 25-26, 1959** (NHOA)

[13] George Low, "Manned Space Flight," in NASA, ***NASA** -Industry **Program** Plans **Conference,*** July **1960, p. 80,** (NHOA).

[14] Logsdon, op. **cit.,** chs. **3-5, recounts the history of the** decision to begin **the Apollo program and analyzes the motives** which **led to that** decision

[15] Ibid **, p. 128**

gress and the public to commit itself to a $25-billion[16] undertaking in space for largely intangible goals of prestige and competition. Congress and the public agreed, launching NASA on its most famous and formative enterprise and creating an indelible image of how to launch a major project in space. Only slowly, if at all, would NASA administrators and other space advocates come to realize that the Apollo commitment was a political anomaly defying duplication.

The Apollo decision also ensured that in accomplishing the lunar landing objective the United States would develop a large, but specialized, space capability, and that manned spaceflight would come to dominate all other kinds for at least a decade. And it ensured, especially after it was complemented by the lunar-orbital rendezvous decision, that the "space station" concept would recede into the background for the duration of the race to the Moon. The Moon mission would proceed on its journey directly from Earth orbit–simply because that was the quickest way to go (though not necessarily the best for long-term development) and the Saturn V launch vehicle (originally designed for other purposes) would permit it.

In this hothouse atmosphere, Project Mercury and Project Gemini became demonstration programs for Apollo. Many of the tasks that had to be accomplished in order for Apollo to succeed were also on the agenda for "space station" research. Mercury, for example, demonstrated that a person could survive the weightlessness and radiation of space. Gemini demonstrated that rendezvous, docking, and extravehicular activity were feasible. The last of these was always more important to "space station" plans than to Apollo. Both projects demonstrated, at least to some, that a human being was a crucial component of the spacecraft's capability, performing such functions as piloting, observing, and photographing; and piloting especially was contrasted with the comparatively primitive, ground-controlled capsules of the Russians in which the cosmonaut was simply a passenger. '

Notwithstanding these positive steps on the road to a total manned spaceflight capability, Apollo was to prove a programmatic deadend for NASA. Many in NASA understood all along that the lunar rendezvous approach to accomplishing the objective was a technical anomaly and they never gave up their notion of a more logical approach to human exploitation of space, i.e., a "space station. " For this reason, while Apollo was at the center of public attention during the 1960s, studies of "space station" concepts proceeded throughout the decade.

"Space Station" Plans During the 1960s

During the 1960s, "space station" studies were conducted both within NASA and by the various aerospace contractors (particularly those without a major role in Apollo). They resulted in examination of a wide variety of concepts, ranging from inflatable balloon-like structures, through the use of refurbished rocket stages, to very large stations requiring the use of Saturn V boosters to put them in orbit. Three NASA field centers—the Manned Spacecraft Center in Texas, the Marshall Space Flight Center in Alabama, and the Langley Research Center in Virginia—managed these in-house and contractor studies, and they were coordinated by the Advanced Missions Office of the Office of Manned Space Flight at NASA headquarters in Washington.[18]

While the manned flight centers at Houston and Huntsville were focusing almost their total energies on getting Apollo started in the early 1960s,'9 the Langley Research Center was giving substantial attention to the theoretical and engineering aspects of "space station" design. These efforts dated from at least mid-1959, and by 1962 enough work had been done to form the basis for a "space station" symposium.[20] Langley researchers noted that "a large manned orbiting 'space station' may have many uses or objectives." Among these objectives they listed:

1. learning to live in space;
   - artificial-gravity experiments,
   - zero-gravity experiments, and
   - systems research and development,
2. applications research;
   - communications experiments,
   - earth observations,
3. launch platform experiments; and
4. scientific research.

With respect to launch platform experiments, Langley suggested that:

> . . . **the "space station" with its crew of trained astronauts and technicians should be a suitable facility for**

[16] Then—some $60 bill ton today.

[17] Swenson, et al., Op. cit.; Barton C. Hacker and James M. Grimwood, *On the Shoulders of Titans: A History of Project Gemini,* NASA SP-4203 (Washington, DC: National Aeronautics and Space Administration, 1977).

[18] Studies during the 1960s at the Langley Research Center, the Manned Spacecraft Center, and the Marshall Space Flight Center are summarized in Langley Research Center, *Compilation of Papers Presented at the Space Station Technology Symposium,* Feb. 11-13, 1969 (NHOA).

[19] Evenso, both Houston and Huntsville had "space station' study efforts under way; in particular, Houston was studying a large (24-person) "space station" to be launched by a Saturn V. The studies directed by Langley have been chosen for review because they were more fully developed than those directed by the two other centers.

[20] The early Langley studies are summarized in Langley Research Center, *A Report on the Research and Technological Problems of Manned Rotating Spacecraft,* NASA Technical Note D-1 504, August 1962 (NHOA).

learning some of the fundamental operations necessary for launching space missions from orbit. The new technologies required for rendezvous, assembly orbital countdown, replacement of defective parts, and orbital launch can be determined. [21]

Among various "space station" studies carried out by Langley contractors during the first half of the 1960s, perhaps the most detailed was that of a Manned Orbital Research Laboratory (MORL) conducted by Douglas Aircraft from 1963 to 1966. Douglas had had some prior interest in "space stations"; **in 1960 it had built a full-scale mockup of a four-person astronomical space observatory as the central theme of an "ideal** home exhibition" held in London. This station was to be constructed inside the fuel tank of a second-stage booster, a Douglas idea which ultimately found use in the Skylab program over a decade later.[22]

In this study, a baseline technical concept for an MORL was established first, then the "utilization potential" of such a station was examined—i,e., design preceded requirements. When the original design was compared to various requirements, it was inadequate, and a larger station in a different orbit evolved as the final result of the study effort. The study found that the highest utilization potential came from "key engineering and scientific research studies augmented by specific experiments directed toward potential Earth-centered applications. " As the study proceeded, the MORL got steadily more sophisticated and bigger, as there were no criteria established to limit the addition of new experimental requirements.

The MORL requirements study examined:

- Earth-centered applications;
- national defense;
- support of future space flights; and,
- the space sciences.

From this analysis, the study predicted the need for "hundreds of thousands of man-hours" in orbit to carry out all useful applications; this implied a long-range requirement for "near-permanent operations and support of probably several space stations. " The study also noted, foreshadowing a future issue, that "the limiting factor on the number of such stations, and the crew size of each station, appears to be the cost of logistic support. " The final MORL concept, although basically a zero-gravity station, had an onboard centrifuge for reentry simulation, testing of physical condition, and physical therapy if zero-gravity conditions were debilitating for the crew.[23]

By early 1963, NASA Associate Administrator and General Manager Robert Sea mans called for study of an Earth Orbiting Laboratory (EOL) from "an overall NASA point of view." Such study was needed, said Seamans, since an EOL had been studied and discussed "by several government agencies and contractors" [24] and because NASA and DOD "are now supporting a number of additional advanced studies. " Seamans' reference to DOD was significant: NASA and DOD were locked in a controversy over control of post-Apollo manned flight efforts. NASA's management, anticipated Seamans, would "be faced with the decision to initiate hardware development" in 1964. Seamans ordered an agency-wide, 4 to 6 week high-priority study which would examine EOL proposals in terms of, among other factors:

1. Defense Department interest,
2. international factors, and
3. other government agency interest. [25]

Throughout this study and other attempts to define a "space station" program in the 1963-66 period, there was a continuing tension between those designing the station itself (primarily associated with the Office of Manned Space Flight (OMSF), its field centers and associate contractors) and those interested in the experiments and other uses of such a facility (primarily the Office of Space Science and Applications and the Office of Advanced Research and Technology (OART)). For example, one OART staffer complained in 1963 that "the fact that OMSF is supplying funds for MORL , . . does not change the fact that in doing so they are in a supporting role to the experimental purpose of the MORL. That experimental purpose should carry a heavy stick in the determination of how the research program will be accomplished. "[26]

Later in **1963,** the Director of OART asked field center assistance in defining "more clearly the potential usefulness of such a laboratory as a platform for scientific and technological research in space. " He noted

[21] Ibid

[22] George V Butler, "**space** Stations, **1959** To?" in B. J. Bluth **and S R.** McNeal *Update* ***on*** *Space*, **vol 1 (Granada Hills, CA National Behavior** Systems, **1981** J, **p 8**

[23] Douglas **Missile and Space Systems** Division, **Douglas Aircraft CO., " Report on the Development** of **the Manned** Orbital **Research Laboratory** (MORL) **System Utilization Potential, "** Report SM-48822, **January 1966.**

[24] Though it is **not** discussed in detail **in this report,** duri **ng this period the Department of Defense was exploring the potential of manned** flight **for** national **security missions. Some of this study effort was conducted jointly with NASA, but most was not; one focus of the effort was the military potential of a "space station. " In 1963, the Air Force's Manned Orbiting Laboratory** (MOL) **program was approved as an initial step in examining the ways** in **wh ich human crews cou ld be used to enhance national security operations** in **orbit The** MOL was canceled in 1969

[25] Memorandum from NASA Associate Administrator, "Space Task Team for Manned Earth Orbiting Laboratory Study," Mar. 28, 1963 (NHOA).

"Memorandum from Chief, Manned Systems Integration, to Director, Office of Advanced Research and Technology, " SEB for the Manned Orbital Research Laboratory, May 16, 1963 (N HOA).

38-798 0 - 84 - 12 : QL 3

that "a view has prevailed to date, based **primarily on intuitive judgment** [emphasis added here], that this research function (exclusive of biotechnology and human factors research) constitutes one of the more important long-range justifications" for a "space station." It was essential, he argued, to make "a correct decision as to whether and **why a MORL project should be undertaken."**[27]

By 1964, the definition of uses for a "space station" had broadened enough to lead the Director of the OMSF Advanced Manned Mission Office to suggest that it was "both timely and necessary to pursue . . . broadly beneficial uses of "space stations" with the departments and agencies that will capitalize and exploit these broader uses" and that an interagency "applications working group" be established for this purpose. Such interagency involvement, he noted, "can result in a higher level of knowledgeable support to **NASA for implementation of a national multipurpose 'space station' program."**[28]

Beginnings of Post-Apollo Planning[29]

Under pressure from the White House and Congress, NASA began looking beyond the Apollo project in 1964 and 1965. In 1964, an in-house examination of NASA's future options had recommended that NASA defer "large new missions for further study and analysis. "3° However, there was concern within NASA about maintaining an adequate workload for both NASA centers and NASA contractors, as the development phase of Apollo neared completion, and an evolutionary approach from Apollo to more advanced activities appeared more likely to meet this need, **given the low probability of a major new start on post-Apollo programs.**

The nature of NASA's long-range planning during this period turned on the style and personality of the Administrator, James E. Webb. A lawyer and businessman who had served President Harry Truman as Director of the Bureau of the Budget (BOB) and as Under **Secretary** of **State,** Webb combined an ebullient and dynamic personality with a keen political sense and long familiarity with the ways of Washington. He believed in long-range planning, but he eschewed long-range plans, which he felt excessively tied the hands of the Administrator. He wanted to be prepared for the future, but he did not want to commit himself or NASA prematurely to another project as large as Apollo.

Webb adopted two approaches to post-Apollo planning. First he characterized and rationalized Apollo as the development of a ***capability*** in space, not an end in itself. Once the Moon landing was accomplished, NASA would be able to convert the resources and experience of the Apollo program to other purposes through a program called Apollo Applications. Second, he used his fine political sense to ensure that NASA adjusted its ambitions in space to suit the climate of opinion in Washington and throughout the Nation. As the war in Vietnam and the domestic unrest of the late 1960s compounded NASA's problems in getting congressional attention and appropriations, NASA gradually modified its internal plans and proposals. The agency took more clearly the line that Webb stressed throughout his tenure: NASA **must have a balanced program in which manned spaceflight played a role along with space science, applications, and aeronautical research.**

NASA spoke more often in the mid-to-late 1960s of practical, Earth-oriented space activities, which would exploit the gains already made and provide taxpayers with tangible returns on their investment in space, And, increasingly, NASA came to look on the "space station" as the logical next step that would at once exploit the Apollo team and its achievements and still respond to political pressure for a measured and pragmatic space program .[31]

The public debate in the late 1960s on the future of the space program introduced many of the concepts about the "space station" that still surround this proposal–some inherited from the Apollo experience, others developed to address the criticisms of that program. First, NASA sought, in conjunction with its plans for a "space station," to define an undertaking large enough to focus the agency's future activities, as Apol-10 had focused them in the 1960s. Occasionally, it was suggested that a manned Mars mission would provide the ideal focus,[32] but the "space station" could per-

---

[27] Memorandum from Director, Office of Advanced Research and Technology, "Request for Assistance in Defining the Scientific and Technological Research Potential of a Manned Orbital Laboratory, " Oct. 31, 1963, NHOA. This is not a reference to the **Air Force's MOL Program.**

[28] Memorandum from Director, Advanced Manned Missions Program, "1 ncreased Participation of Potential User Agencies in Development of Broadly Beneficial Utilizations of Manned Orbiting Space Station, " July 15, 1964 (N HOA).

[29] See Arnold Levine, ***Managing NASA in the Apollo Era,*** NASA Sp-4012 (Washington, DC: National Aeronautics and Space Administration, 1983), chapters 2 and 9 and James Webb's foreword, for a full account of post-Apollo planning.

[30] The report was called "Summary Report, Future Programs Task Group, " and was printed in U .S. Senate, Committee on Aeronautical and Space Sciences, ***Hearings, NASA Authorization for Fiscal Year 1966,*** 89th Congress, 1st sess., 1965, pt. 3, pp. 1027-1102.

[31] See, for example, Webb's testimony i n U.S. Congress, Senate Committee on Aeronautical and Space Sciences, ***National Space Goals for the Post-Apollo Period,*** Hearings, 89th Cong., 1st sess., Aug. 23-25, 1965.

[32] Webb for example, stressed the importantance of focus in a letter to President Johnson, Feb. 16, 1965, published in U.S. Congress, Senate Committee on Aeronautics and Space Sciences, ***NASA Authorization for Fiscal Year 1966,*** op. cit., p. 1028,

form the same function, even while providing a logical step toward Mars. The "space station" had the added advantage of seeming more practical and Earth-oriented. Second, NASA stressed the flexibility of the "space station" concept and a station's ability to perform a variety of functions ranging from Earth-oriented applications and scientific research to staging platforms for manned missions to the planets. George E. Mueller, NASA's Associate Administrator for Manned Flight, emphasized the economic benefits of "space stations" i n such areas as applications, weather, communications, research, and national security. [33]

NASA advocacy of "space stations" also argued that the country should see that the Apollo team and hardware were held together and exploited, should maintain manned spaceflight in addition to unmanned missions, and should sustain the Nation's preeminence in space in flight operations, science, and technology lest the Soviets win the long-term space race by default.[34] Occasionally, NASA invoked national security as a rationale for the "space station, " but in the 1960s, at least, this brought the agency into apparent conflict with the Air Force's Manned Orbiting Laboratory, a conflict Webb tried to avoid, at least in public. [35]

The theme that NASA employed most relentlessly was that the "space station" was the logical next step in the development of America's capability in space. George Mueller was especially emphatic. Speaking of practical applications, he testified:

> **The major steps that are involved . . . are, first of all, the development of an orbital "space station, " and along with that is a** need **for a logistics system to pro-**vide support for an orbital "space station. " That combination then leads to the development of what might be called an application center, and if you will, that is probably going to turn out to be a relatively large orbital station which will have in it the sensors that are required .36

Continuing this hypothetical progression of Earth-oriented, practical "space stations, " Mueller added that,

> . . . having utilized this orbital station for a number of years, there is another major step forward in going to a research complex which might be the large orbiting research laboratory and coming from that research complex, then, would come the second generation of application centers, and here they would be more specialized and there would be more of them.

This envisaged a time well into the future where man is really operating on a continuing basis in space . . . . Mueller also proposed that:

> we can go in the direction of exploiting our lunar capability as it developed in the basic Apollo program and will be developed further if the Apollo Applications Program is carried out. Or we can go in the direction of increased emphasis on Earth orbit applications . . . . We can go from Apollo applications through the development of an orbital "space station, " and then on to the near planet flyby systems and follow a logical path which then goes to planetary exploration.

For all the purposes a "space station" might serve, from the purely practical to the widely visionary, it was always cast in this period as the logical next step in developing space capability. NASA instituted an Apollo Applications Program, but this was an interim move towards what the agency really sought: a major political commitment to make the next step another large one.

In 1967 and 1968 this campaign suffered major reversals which had permanent impact on the course of events. The Apollo 204 fire in January 1967, which killed three astronauts during preflight testing at Cape Kennedy, set the Apollo landing back a number of months, and cast the first serious doubt on NASA's ability to meet its Apollo goal. The accident also focused congressional attention on NASA and consumed some of the agency's political credit on the Hill. Perhaps more damaging in the long run was the resignation of James Webb in the closing weeks of the 1968 presidential election campaign. Leaving the agency without the major commitment to a post-Apol-10 program he had sought, Webb took with him an irreplaceable sense of political pragmatism that the agency would sorely miss.

As the first successful lunar landing mission approached, in the fall of 1968 NASA requested $60 million to initiate a "space station" effort. This request was denied. NASA approached the beginning of 1969 in some disarray:

- James Webb had resigned in the Fall of 1968, and the Acting Administrator, Thomas Paine, was new to the agency.
- Richard Nixon had been elected President, and his position on space policy was far from clear.
- NASA had settled on the "space station" as its post-Apollo program objective, but to date had had no success in getting Presidential or congressional support for such an initiative.

NASA took bold action in the early months of 1969 to attempt to change this situation.

---

[33] Mueller's **testimony** is in U.S **Congress, Senate** Committee on Aeronautical **and Space Sciences, *National Space Goals for the Post-Apollo Period,*** op **Clt** , p. 103

[34] U .S Congress, Senate Com mittee on Aeronautical and Space Sciences, *National Space* God/s *for* ***the Post-Apollo Period,*** op. Cit., p. **338,**

[35] Webb told Congress the MOL **"represents** an added nationa l space Capa bility rather than a competitive one. " Ibid , p, 341. See also the testimony of Harold Brown, Director of Defense Research and Engineering, esp p. 336

[36] This and the followi **ng** two q uotations are from ibid , pp. **49, 62, and 64**

Post-Apollo Planning Under Thomas Paine

A **research engineer before joining NASA** as Deputy Administrator in January 1968, Thomas O. Paine became Acting Administrator following Webb's resignation in October. Nominated NASA Administrator by President Nixon in March 1969, Paine was confirmed by the Senate the same month, beginning the shortest term—less than 20 months—of any NASA head.

Paine was a swashbuckler,[37] an out-and-out space enthusiast, critical of the caution and circumspection of his predecessor and determined to inaugurate the second decade of space with a major, national, Apollo-like commitment. As he wrote to the President's science advisor after being confirmed as NASA Administrator:

> We have been frustrated too long by a negativism that says hold back, be cautious, take no risks, do less than you are capable of doing. I submit that no perceptive student of the history of social progress doubts that we will establish a large laboratory in Earth orbit, that we will provide a practical system for the frequent transfer of men and supplies to and from such a laboratory, that we will continue to send men to the Moon, and that eventually we will send men to the planets. If this is true, now is the time to say so . . . .We in **NASA are fully conscious of practical limitations . . . .In** the light of these considerations, we can be sensible and moderate about our requests for resources—but we *must know where we are going. 38*

Initial Proposals

This philosophy led Paine, at the start of the Nixon administration, to take steps unusually bold for an acting agency head. In February 1969, Paine appealed directly to the President in support of the manned space flight program. He argued that "positive and timely action must be taken by your Administration now to prevent the Nation's programs in manned space flight from slowing to a halt in 1972" and suggested that:

> the nation should . . . focus our manned space flight" program for the next decade on the development and operation of a permanent "space station"-a National Research Center in Earth orbit—accessible at reasonable cost to experts in many disciplines who can conduct investigations and operations in space which cannot be effectively carried out on Earth.

Paine told the President that he had "a unique opportunity for leadership that will clearly identify your administration with the establishment of the Nation's major goals in space flight for the next decade" and that "the case that a 'space station' should be a major future U.S. goal is now strong enough to justify at least a general statement on your part that this will be one of our goals."[39]

Paine asked for a March 31 presidential decision on future manned space flight issues. He did this even though he knew that, on February 13, the President had established an ad hoc blue-ribbon Space Task Group (STG) and had asked that group for "definitive recommendations on the direction which the U.S. space program should take in the post-Apollo period," with a September 1 reporting date.[40] By asking the President to decide on the future of manned space flight in advance of the planning process which was being established for precisely that purpose, Paine was trying to use the success of the Apollo 8 circumlunar mission and the desire on the part of any new administration to take some early and popular initiatives as counters to a process which he was not sure would be favorable to NASA.

In preparing for Space Task Group consideration of the Paine initiative, the positions of the various participants on a large "space station, " and the factors influencing their positions, became evident.

The BOB objective was to "head off any play by NASA to get a budget amendment now" since "this is bad budget strategy, probably unworkable as far as Congress was concerned, and impossible to obtain without committing the President to support the long-range objectives. "[41]

The President's Science Adviser, Lee DuBridge, asked the Space Science and Technology Panel[42] to assist him in evaluating the Paine initiative. The Panel met with NASA officials, and advised Dr. DuBridge that there was "no great urgency" related to the issues Paine had raised and, "from a programmatic standpoint, the arguments in favor of early action appear very weak. "[43]

---

[37] Homer Newell, ***Beyond the Atmosphere: Early Years*** *of Space Science* **NASA SP-421 1 (Washington, DC:** National **Aeronautics and Space** Administration, **1980),** p. **288.**

[38] Quoted in **Levine, op. cit.,** pp. **258-259.**

[39] Memorandum **from Thomas Paine to the President, "Problems and** Opportunities **in Manned Space Flight," Feb. 26, 1969.**

@The STG **was chaired by Vice-President Spiro T. Agnew and had as members NASA, the president's Science Adviser, and the Department of Defense, The Bureau of the Budget, Department of State, and Atomic Energy** Commission **had observer status.**

41 Brief in **Memorandum prepared by the Bureau of the Budget,** Economics, **Science, and Technology Division, "President's Task Group on Space** Meeting **No, 1," Mar. 6, 1969.**

[42] A **subgroup of the president's Science Advisory** Committee (PSAC).

[43] Ibid

The "space station" did gain some support from the Department of State, which saw:

> . . . a close relationship between our space program and foreign policy objectives. Thus, an ongoing, challenging and successful space program is important from the viewpoint of these objectives–particularly one designed and funded to afford increasing opportunities for international cooperation.

The State Department believed that there were "greater international values i n a "space station" and reusable logistics vehicle than in . . . lunar exploration, " and that:

> our choices should not be unduly influenced by our estimate of Soviet choices, nor do we need to prejudice deliberate consideration of our space goals in order to preempt Soviet activities. Our capability is now well understood both by the Soviets and by most other countries. Foreign countries will focus less on the competition between ourselves and the Soviets than on the relevance of space activities to their own interests and needs[44]

The Department of Defense (DOD) position was that DOD "does not have or anticipate projects which require a "space station" as defined by NASA. DOD has great interest in the development of a lower cost transportation system suitable for their uses as well as for NASA' s."[45]

The report of the STG staff directors was a rejection of that part of the Paine initiative which asked for early "space station" commitment:

> The majority of the Committee members . . . did not support the request for additional FY70 funding to enable more rapid progress toward the launch of a "space station" in the mid-1970s. This view does not represent an unfavorable judgment on the question of adopting the "space station" as a major new goal of our space program, but rather results from a desire not to imply prejudgment of the eventual result of the STG review. The case for urgency was unconvincing, and it appears that no important options would be foreclosed by deferring action .46

This attempt by NASA to get early commitment to a "space station" has been reviewed in some detail because its resolution foreshadowed much of what happened in the following 1 ½ years as NASA struggled to gain support for a "space station" development as its major post-Apollo program objective, Throughout the STG review and the White House consideration of the STG report, NASA argued that the "space station, " and not the space shuttle concept, which was evolving from its origin solely as the station's logistic vehicle, should be the Agency's top-priority program, In the summer of 1969, NASA let two Phase B study contracts for "space station" design, and in its 1970 congressional testimony the station was presented as the centerpiece of the agency's programs,

Throughout 1970, NASA continued technical studies and user-oriented activities to promote the station concept. However, by the middle of that year, it was clear that in the eyes of the space subgovernment outside of NASA, the shuttle program was a more attractive investment than was the station, and by the end of the year, the station had been dropped back to conceptual study status. NASA had built up a great deal of momentum behind the "space station" concept through the 1960s, but when it came time for the country to decide, through the policymaking process, whether the station was a "good buy, " the response was negative. The reasons for this negative assessment were already clear for NASA to see by March 1969, but it took over a year for NASA's leadership to recognize the situation and to steer the Agency away from the station and behind the shuttle.

Detailed Station Planning

After conducting preliminary Phase A studies, primarily in-house, during 1967 and 1968, NASA was prepared in early 1969 to involve the aerospace industry in defining the program through two Phase B studies. NASA's hopes were that these program definition studies would provide the technical basis for a start on "space station" development within a year or two. These studies were initiated in September 1969, and extended over most of the next 2 years. But events at the policy level made it increasingly unlikely that the "space station" program would ever proceed beyond the Phase B stage, at least in the 1970s.

The handwriting was already on the wall by the time the "Paine initiative" was rejected in March 1969, but during the rest of 1969 and 1970 it became much clearer. Finally, NASA could no longer avoid reality, and by late 1970 the space Shuttle, not the station, was identified as the agency's top priority. Just as the Apollo Applications Program had been a "better buy" for the country in the mid-1960s, so the Shuttle was perceived by policy makers in the early 1970s, But the failure of the "space station" program to gain approval was not because of a lack of effort; the Phase B study process was the focus for that effort.

DEFINING THE PREFERRED CONCEPT AND ITS RATIONALE

One problem, perhaps the key one, was that NASA found it quite difficult to tell both prospective contrac-

---

[44] R F Packard, "Department of State observations, " draft, Mar. 13, 1969.
[45] Milton Rosen **(NASA staffer** for STG), "Memorandum **for the Record, " Mar 13, 1969 (N** HOA).
[46] " Report of the space **Task Group Staff** Di rector's Committee on NASA'S Request **for Amendments to** the **NASA** fiscal **year 1970 Budget," Mar.** 14, 1969, p 4

tors and the political leadership what kind of station, for what purposes, it wanted to develop. This was so even though NASA had been studying "space station" concepts throughout the 1960s. The basic requirements which had emerged from the study effort were:

1. qualification of people and systems for long-duration Earth orbit flight;
2. demonstration of man's ability and functional usefulness in performing engineering and scientific experiments; and,
3. periodic rotation of the crews and resupply of the "space **station. "**

The average crew size for this station was planned to be six to nine persons, with a 2-year orbital lifetime design goal.[47] An Apollo command and service module launched by a Saturn 1B booster was to be the logistics vehicle for the station; the station itself was to be launched on a Saturn V booster.

When Thomas Paine was exposed in January 1969 to this staff thinking, he found it too modest. His center directors agreed. For example, Wernher von Braun told Paine that:

> **NASA should now tell the contractors what we want in the long run, what we foresee as the ultimate—the long range–the dream–station program. NASA should spell out the sciences, technology, applications, missions and research desired. Then NASA should define a 1975 station as a core facility** in orbit from which **the *ultimate*** "space **campus" or "space** base" can grow in an efficient orderly evolution through **1985.**

MSC Director Robert Gilruth told Paine:

> **We** should now be looking at a step more comparable in challenge to that of **Apollo after Mercury.** The "space station" size should be modular and based on our Saturn V lift capability into 200-mile orbit. Three launches would give us one million pounds in orbit, including spent stages. That is the number we should be planning for the core size.[48]

Out of this lack of consensus within NASA came a rapid change from the January concept of a "space station." In February, ***Aviation Week*** reported that "all previous concepts have been retired from active competition in favor of a large station," with the focus on "a 100-man Earth-orbiting station with a multiplicity of capabilities" and the "launch of the first module of the large "space station, " with perhaps as many as 12 men, by 1975. " Top NASA officials were reported to have rejected earlier "space station" plans as "too conservative. "[49]

NASA issued a Statement of Work for the Phase B Space Station Program Definition on April 19. Prospective contractors were ready; they had been following the rapidly expanding character of the program closely and were "already forming teams in anticipation" of the Phase B competition. so

The Work Statement described the "space station" as "a centralized and general purpose laboratory in Earth orbit for the conduct and support of scientific and technological experiments, for beneficial applications, and for the further development of space exploration capability" and noted that the work requested would include "the Space Base but will focus on the mid-l970s Space Station as the initial but evolutionary step toward the Space Base. " The objectives of the "space station" program were stated as:

- Conduct beneficial space applications programs, scientific investigation and technological engineering experiments.
- Demonstrate the practicality of establishing, operating, and maintaining long-duration manned orbital stations.
- Utilize Earth-orbital manned flights for test and development of equipment and operational techniques applicable to lunar and planetary exploration.
- Extend technology and develop space systems and subsystems required to increase useful life by at least several orders of magnitude.
- Develop new operational techniques and equipment which can demonstrate substantial reductions in unit operating costs.
- Extend the present knowledge of the long-term biomedical and behavioral characteristics of man in space.

The initial "space station" was to have a crew of 12, and would normally operate in a zero gravity mode, but during the early weeks of its operation there would be an assessment of the effects of artificial gravity; a counterweight would be tethered to the station and the configuration spun to provide the gravitational effect, The station was to be 33 ft in diameter and was normally to operate in a 270-nautical mile, 55° orbit, but also be capable of operating in polar and slightly retrograde orbits, [51]

Shortly after the original proposals in response to the statement of work were received by NASA, a new requirement was added to the Phase B effort. Not only was the "space station" to be designed so that it could be the core around which a space base could be de-

---

[47] William Normyle, **"Alternatives Open on Post-Apollo, "** *Aviation* ***Week and Space Technology,*** **Jan, 13, 1969,** p. **16.**

[48] Thomas Paine's **notes from meeting on space stations,** Jan. 27, 1969 **(NHOA).**

[49] William Normyle, **"NASA Aims at 100-Man Station, "** ***Aviation Week and Space Technology,*** **Feb. 24, 1969,** p. **16.**

[50] William Normyle, **"Large Station May Emerge as 'Unwritten' U.S. Goal,"** *Aviation* ***Week and Space Technology,*** **Mar, 10, 1969, p. 104.**

[51] NASA, 'Statement of Work: Space **station Program Definition (Phase B), " Apr. 14,** 1969.

veloped; the station module would also be the core of a spacecraft designed for a manned trip to Mars. This requirement came out of the policy debates described in the section in this report, "NASA's Post-Apollo Ambitions Dashed," and was a reflection of the high hopes for all of NASA's future manned programs which were pervasive in the immediate aftermath of the first lunar landing.

PHASE B STUDIES

Three aerospace firms, North American Rockwell, McDonnell Douglas, and Grumman Aircraft, submitted proposals to NASA in response to the Phase B Statement of Work, and on July 22, 1969, NASA awarded Phase B contracts of $2.9 million each to North American Rockwell and McDonnell Douglas. The studies were to run for 11 months beginning in September; MSC would manage the North American Rockwell effort, and MSFC, the McDonnell Douglas study.

A continuing problem during the course of the Phase B studies was the difficulty of integrating station design and the candidate experiments for the station. These studies were compiled into a thick document known universally as the "Blue Book. " One participant in the study later noted that "the candidate experiments compiled in the NASA Blue Book are too costly to be considered as a whole, are somewhat duplicated . . . , have not been verified as the true experiment goals . . , ."[52]

The Phase B studies were extended for 6 months on June 30, 1970; by this time, the planning date for the first station launch had slipped to 1977. The cost of the program was now estimated at $8 billion to $15 billion, including both development costs and 10 years of on-orbit operations; this estimate did not include the cost of a space Shuttle program. It was reported that "an overriding desire on the part of the United States to internationalize the 12-man "space station" . . . has eliminated any possibility of Department of Defense participation in the program."[53]

In addition to the technical design activities, NASA was undertaking a Phase B effort to define experiment modules to be added to the core station and planning a year-long study to involve potential users, both domestic and international, in the program as it was developing. A user's symposium to kick off this effort was scheduled for September 1970, and both study contractors were building full-scale mockups of the 33-ft station. However, beneath this growing momentum was an uncertain base of political support.

On July 29, 1970, Charles Mathews, NASA's Deputy Associate Administrator of Manned Space Flight, ordered MSC and MSFC to terminate the continuing Phase B activity and to redefine the effort in a fundamental way. On the basis of congressional action, NASA leadership had become convinced that the Saturn V program, which had been in terminal condition for almost 2 years, was finally dead, i.e., there would be no booster capable of launching a 33-ft station. The only launch vehicle available for use in putting the "space station" into orbit would now be the space Shuttle, with its planned 15-ft by 60-ft payload bay. What had started out as the supply vehicle for the station was to be its key to survival.

It took some doing to skew the study effort toward components with diameters able to fit into the Shuttle payload bay; one study contractor commented that "people who were eager to fly in a 33-ft station found the prospect of long stays in the 14-ft station not very attractive. " But NASA did issue Phase B extension contracts for a modular "space station" study effort to extend through most of 1971, and North American Rockwell and McDonnell Douglas went to work on the new concept.

By the time the studies were begun, however, the likelihood that they would lead to an early commitment to station development was already vanishingly small. NASA had suffered a number of defeats in late 1969 and through 1970 in its attempts to get an ambitious post-Apollo program approved, and by the summer of 1970 it was becoming quite clear to NASA leaders that only one big program had any chance of presidential and congressional approval, and that it was not the "space station" program. From its start as the "advanced logistics system" for the station and space base, the space Shuttle had garnered the interest of the Air Force and many within NASA, and *in* the summer of 1970 the agency leadership grudgingly decided to make the Shuttle its top-priority program. Thomas Paine had announced his resignation in mid-1970, and the station thus lost a supporter at the top; this may have made the shift to the Shuttle easier.

Station studies continued through 1970, 1971, and 1972, with the final in-house studies focused on a single research applications module (RAM) to be carried into orbit by a Shuttle.[54] This was all that remained of what, only a few years earlier, had been plans for truly large facilities in Earth orbit. As a final indication of this reality, on November 29, 1972, the Space Sta-

[52] Jack C. Heberlig, "The Management Approach to the NASA Space Station Definition Studies of the Manned Spacecraft Center, " NASA Technical Memorandum X-58090, June 1972, p. 30,

[53] *Space Business Daily,* July 27, 1970.

[54] This ultimately became the basis for the Spacelab developed by the European Space Agency,

tion Task Force was abolished, then immediately reincarnated as the Sortie Lab Task Force. NASA was able to gain approval for Shuttle development in early 1972, and that task occupied the agency's energies throughout the decade. Until the Shuttle was ready, the dream of permanent human facilities in space would have to wait. However, preserving a large payload bay as an essential element of the Shuttle, NASA was able to maintain the possibility of returning to the station concept, thereby keeping its dream alive.

NASA's Post-Apollo Ambitions Dashed[55]

While the "space station" Phase B effort was proceeding apace at the technical planning level, at the policy level NASA from 1969 through the end of 1971 was trying to get White House (particularly) and congressional support for an increasingly less ambitious post-Apollo program. The initial forum for this attempt was the Space Task Group. After its early rejection of NASA's "space station" initiative, the STG turned to the task of preparing recommendations on future space policy and programs for President Nixon.

The image of the Apollo commitment as a model for future space goals colored STG discussions from the start. At an early STG meeting, NASA's Administrator, Thomas Paine, argued the need for a "new banner to be hoisted" around which competent and motivated engineers, scientists, and managers could rally, as they had around the Apollo goal. Vice President Agnew, reacting to Paine's point, raised for the first time in the STG context the question which would influence much of the group's debates: Where was the Apollo of the 1970s? Could it be, asked Agnew, that the United States should undertake a manned mission to Mars?

When Agnew first read the staff proposals for STG consideration, he reportedly was disappointed because none contained the strong and dramatic theme he thought was required for the national space effort. On July 16, 1969, as he joined thousands at Kennedy Space Center to watch the liftoff of the Apollo 11 mission, Agnew "went public. " In interviews at the launch site Agnew said that it was his "individual feeling that we should articulate a simple, ambitious, optimistic goal of a manned flight to Mars by the end of this century. " After liftoff, Agnew told the launch team that he "bit the bullet . . . today as far as Mars is concerned. "

Agnew's statement at Cape Kennedy was not a spontaneous reaction to the excitement of the occasion; it had been planned in advance. It reflected Agnew's willingness to lend support to an ambitious and bold space program, if only NASA would propose it. This willingness matched the predispositions of NASA administrator, Paine, himself disappointed at the lack of excitement and purpose he was getting from the organization's planning machinery. Spurred on by Agnew's private and public support, Paine decided that NASA should also "bite the bullet" and move aggressively to identify an early manned Mars mission as the central focus for its future plans. In order to do this, he ordered NASA planners explicitly to incorporate a manned Mars mission during the 1980s into NASA's overall plans. This was the source of the early modification to the Phase B study requirements described previously.

There were several reasons for switching to the Mars emphasis as a central theme in NASA planning. Perhaps most influential was the early STG rejection of a "space station" commitment based on the "logical next step rationale. " By justifying a "space station" as a necessary precursor to manned Mars missions i n the 1980s, NASA hoped to provide a convincing rationale for the station's urgency. Not only "space stations" but the newly proposed space Shuttle, the development of nuclear rocket engines, and the retention of the large Saturn V as a booster were required if an early manned Mars landing were to be approved as a national goal.

Between March and August 1969, as the Apollo program and other ongoing NASA missions achieved spectacular successes and public interest in space was at a peak, as the Vice President continued to ask for an "Apollo for the seventies, " as NASA's manned flight organization coalesced behind an aggressive plan of new activities for the next decade, Paine became more and more bullish about the need for bold new initiatives as a way of keeping the Nation's civilian space program vigorous and his agency's momentum large. As Apollo came to an end, NASA plans had gotten increasingly ambitious.

Now, by asking for "commitment in principle" to the most ambitious plan his advisers had conceived, Paine presented a challenge to the other STG members and to others interested in the future of the space program. He told the Nation that NASA was ready to begin a program that would send people to Mars at the earliest feasible time, and he asked the Nation's leadership whether they were willing to support such a bold enterprise. The answer was not long in coming, and it was a resounding "No."

The results of NASA's attempt to mobilize support behind the Mars objective, were, from the agency's perspective, little short of disastrous. What NASA discovered was just how limited the support for major new space initiatives was. The final STG report, sub-

[55] This account is adapted from John M. Logsdon, "The Policy Process and Large-Scale Space Efforts," *Space Humanization Series, vol.* 1, 1979, pp. 65-80.

mitted to the President i n mid-September, did suggest that "the United States accept the long range option or goal of manned planetary exploration with a manned Mars mission before the end of this century as the first target. " This goal, said the report, would act as "a shaping function for the post-Apollo program. " Beyond its general statements, the report recommended no commitment to any particular program option or even any specific project on a particular timetable.

Even this "muted Martian manifesto" had no standing with the White House. Although the STG finished its work with its submission to the President, more then 6 months passed before Nixon made any formal reaction to the Group's recommendation, and that reaction was noncommittal. In the interim the processes of public policymaking operated on the space program to shape it to the short- and longer-term requirements of what the White House perceived as the budgetary and political interests of the Nation. When NASA tried to use the STG report as the basis for justifying its 1971 **budget request, it found that the report's recommendations carried little weight either in the Bureau of the Budget or, particularly, the White House.**

While the President personally apparently remained a space buff, his advisers were quite skeptical of the political payoffs from major new activities in space; their reading of public opinion was that American society had little interest in future space spectaculars. This skepticism, combined with stringent budgetary constraints, resulted in a budget for NASA in fiscal 1971 that was far below NASA's most pessimistic expectations. NASA, still not reconciled to the notion that space had little political support, "fought a retreating action through the entire budget process, " being "beaten back but fighting lustily at every turn of the road, " according to Administrator Paine.

It was in this context that, during the first half of 1970, it became clear to NASA leadership that NASA would not get approval to develop simultaneously both a "space station" and the space Shuttle. In a March 1970 statement, President Nixon provided only a very guarded endorsement of future space activities, and what priority was granted he gave to the space Shuttle. During the 1970 debate over NASA's budget, Congress expressed a high degree of skepticism about ambitious new goals in space. The linkages among the Shuttle program, development of a "space stat ion," and a manned Mars expedition came under particular attack, and threatening but unsuccessful attempts to delete funds for station and Shuttle studies **were** made in both the House and the Senate.

As the preceding section described, at the technical level NASA was still acting in mid-1970 as if "space station" approval were possible. However, NASA's policy leadership grudgingly read the handwriting (which was in capital letters) on the wall, and in putting together the next agency budget request in September 1970 decided to make the Shuttle the top-priority NASA program for the 1970s and to give up attempts to gain approval to develop a "space station" until after the Shuttle program was well under way. **It took another 1 ½ years of conflict-filled negotiations with the White** House and Congress before NASA was able to gain their endorsements of the space Shuttle in 1972.

Using the budget process, the political leadership of the country had applied its concept of national interest and national priorities to the space program; through that process, the technological aspirations of NASA were put under firm though perhaps too short-term political control. What happened to NASA's "space station" plans is best viewed, not in terms of NASA "winning" or "losing," but in terms of what happens when an agency's aspirations are significantly at variance with what political leaders judge to be both in the long-term interests of the Nation ***and*** politically feasible. This experience might be quite relevant to current attempts by NASA to **gain support** for the kind of "space station" program that it desires.

Skylab: An Interim "Space Station"[56]

The only remainder of the Apollo Applications Program, begun with high hopes in 1966, Skylab was a S-IVB third stage of the Saturn V launch vehicle, outfitted as a workshop to be visited by three successive crews after being launched into low Earth orbit. The mission could hardly have gotten off to a worse start. During launch of the Skylab workshop in May 1973, the meteor/thermal control shade tore loose from the spacecraft and seriously damaged a solar cell panel needed to produce power on the vehicle. The first crew to visit Skylab managed to jury-rig a parasol to replace the shade and to salvage the one solar panel that was not lost in launch. This proved enough to save the mission and to allow virtually the full run of experiments that had been planned for the three crews that visited the laboratory in 1973 and 1974, turning potential disaster into another virtuoso display of NASA resourcefulness and skill.

Skylab provided grist for everyone's mill. "Space station" advocates praised the demonstration of man's long-term survivability in space–84 days for the third

[56] For a full account of the Skylab project, see W. David Compton and Charles D Benson, *Living and Work/rig in Space. the History of Spacelab* NASA SP-4208 (Washington, DC: **National Aeronautics and Space** Administration, **1983).**

crew—and the rich variety of scientific and applications tasks of which he had proved himself capable–ranging from Earth observation and photography to manning the solar telescope, conducting physiological experiments, and even carrying on space processing. Especially did they fasten on the role of human beings as the flexible, opportunistic component in the "space station" that had saved the mission with emergency repairs no machine could have made. Without people, claimed the advocates, Skylab would have failed.[57]

Without people, claimed the critics, Skylab would not have been necessary. Many who questioned the wisdom of manned space flight, especially scientists, even while they conceded the impressiveness of the Apollo achievement and appreciated how their own programs had ridden on its coattails, came to wonder if the whole undertaking involving people was worth the candle. With money drying up and many scientific missions promised for the final flights of Apollo being canceled with those flights, the relative economy and efficiency of unmanned, automated missions looked more attractive in contrast.[58]

Whatever the eventual evaluation of Skylab, it was interpreted by NASA's manned space flight managers as legitimizing renewed study of the "space station" concept. Those studies, carried out during the 1974-80 period, have laid the base for current discussions of whether it is finally time to move ahead with the acquisition of in-space infrastructure, of what character and magnitude, to be obtained by when, and to be operated, used, and paid for by whom.

Recent In-Space Infrastructure (i.e. "Space Station") Studies

In addition to the impetus to reexamine the "space station" concept which came from the success of the Skylab project, other influences in the same direction included the need to begin to identify potential "post-Shuttle" programs and new requirements for using men and women **in space operations emerging from a number of study efforts being carried out by NASA in the 1974-75 time frame.**

In order to build a plausible rationale for once again proposing a "space station" as an element of NASA's program, it would be necessary to identify some high-priority activities which could not be accomplished using the space Shuttle, with its 7 to 20 day orbital staytime, its Spacelab facility for manned experimental activities, and its significant capability for lifting large and/or heavy cargoes to low Earth orbit (LEO). Studies which established requirements for large structures in both LEO and geosynchronous orbit–structures which could only be constructed in space—seemed to provide the needed rationale, and space construction became a major theme in space infrastructure studies during the 1975-80 period.

The first NASA foray into a new station study effort was a 1975 study of a "Manned orbital Systems Concept" (MOSC) carried out by McDonnell Douglas Astronautics under the technical direction of the Marshall Space Flight Center. This study "examined the requirements for . . . a cost-effective orbital facility concept capable of supporting extended manned operations in Earth orbit beyond those visualized for the 7-to 30-day Shuttle/Spacelab system." Study guidelines included use of available hardware developed for the Skylab, Spacelab, and Shuttle programs, "insofar as practical, " and an initial operational capability (IOC) in late 1984.

The context for the MOSC study included a growing concern about the Earth's resource limitations, population growth, and environmental stresses, driven by the widely publicized "limits to growth" debate of the early 1970s. The study noted that "the planning and development of future space programs cannot be done in isolation from the many critical problems facing the peoples of the world during the coming decades" and that "there will continue to be many conflicting and competing demands for resources in the years ahead." This context skewed the emphasis in establishing activities to be conducted with the support of in-space infrastructure to "the research and applications areas that are directly related to current world needs. "

Though oriented more directly than past station concepts to high-priority global problems, the MOSC study still emphasized the "science and applications research facility" rationale; although such activities as assembly of large structures and operating space manufacturing facilities were examined during the study, the emphasis was on a facility which would "enable the scientific community to pursue programs directly related to the improvement of life on Earth." The final MOSC configuration called for a four-man modularized facility; the manned module would be based on the Spacelab design, and Spacelab pallets would also be used to support unpressurized payloads. Total program costs for development and operation of the initial MOSC facility were estimated to be $1.2 billion.[59]

[57] See, for example, John H. Disher, "Next Steps in Space Transportation, *Astronaut/es and Aeronautics,* January 1978, p. 26,

[58] Newell, op. cit., pp. 290-295.

[59] McDonnell Douglas Astronautics, *Manned Orbital System Concepts Study,* Book I-Executive Summary, Sept. 30, 1975, pp. iii, 1-2, 30, 36.

Rather than attempt to gain approval to take the MOSC effort to a Phase B stage, in the Fall of 1975 NASA decided to conduct further studies in which the emphasis was shifted from research in orbit to space construction. In explaining its study plans, NASA noted:

> Earlier "space station" studies emphasized the "Laboratory in Orbit" concept. Emphasis is now being placed on a Space Station as an "Operational Base" which not only involves a laboratory but also such uses as: (a) an assembly, maintenance, and logistics base for conducting manned operations involving antennas, mirrors, solar collectors, transmitters; (b) for conducting launch and retrieval operations for orbit-to-orbit and Earth-departure vehicles which may require assembly or propellant transfer in orbit; (c) for conducting retrieval, maintenance and redeployment operations for automated satellites; (d) for managing clusters of spacecraft and space systems as a central base for support for common services . . . .
>
> Orbital location studies will emphasize the possible exploitation of geosynchronous orbit, as well as low inclination and polar low Earth orbit . . . . Current planning is directed toward a "space station" new start in fiscal year 1979.[60]

There were a number of reasons for NASA's switch i n emphasis in "space station" justification. There was no evidence that the scientific community was any more supportive of a manned orbital laboratory concept in 1975 than it had been in 1970; prior attempts to justify a "space station" by its use as a space-based R&D facility had not been successful. More positively, the mid-70s saw a number of studies of the potentials of space operations for addressing problems on Earth.

The most broadly conceived of these studies was undertaken by a NASA study group which was asked in 1974 by NASA Administrator James Fletcher (who had become Administrator in April 1971) to provide an ***Outlook for*** Space—"to identify and examine the various possibilities for the civil space program over the next twenty-five years. " The study group concluded that:

> . . . the great challenges facing the physical needs of humanity are principally the results of the continuing struggle to improve the quality of life. Particularly critical is the need to improve food production and distribution, to develop new energy sources, to meet new challenges to the environment, and to predict and deal with natural and manmade disasters. In each of these areas, we found that significant contributions can be made by a carefully developed space program.

The NASA report recognized that "future space programs must provide a service to the public." In responding to the ***Outlook for Space*** report, James Fletcher set as a primary NASA goal, "accelerating the development of economic and efficient space services for society, " such as "resources management, environmental understanding, and commercial returns from the unique contributions of space. "[61]

The ***Outlook for Space*** report was not directly or strongly supportive of the need for a "space station. " It did conclude, however, that:

> Most of these activities might well be supported by the Shuttle system, together with associate space laboratories and free-flyers, There are more far-reaching objectives, however, which will require human activities in space transcending those supportable by current Shuttle flight plans, such as the construction of satellite power stations or the establishment of a permanent lunar base. **It is** difficult at this time to assert that either of these activities, or others like them—space manufacturing, space colonies—will be undertaken within the next 25 years. Nevertheless, as we looked at the future of space, particularly at those more creative programs directed toward major exploitation of the opportunities which space provides, we inevitably found man to be an integral part of the system. If the United States is to be in a position to take advantage of these potential benefits then it would seem necessary that we develop the capability to operate for extended periods of time. The space facility would be constantly available, although crews would, of course, be periodically exchanged.
>
> The creation of such a permanent space facility seemed to us to be the most useful way to continue the advancement of manned-flight technology. With the Shuttle system giving us comparatively low-cost access to space on the one hand, and the economies which could be realized from the use of the permanent space facility on the other hand, the construction of a permanent "space station" appears to be the next logical step for the manned flight program—not as an objective in itself, but rather for its technological support of a number of other objectives which can benefit from our growing knowledge of how humans can work in space and to provide a foundation for the future.[62]

Once again, NASA saw the justification for a "space station" primarily as "the next logical step" in exploiting people's ability to work in space.

In addition to the ***Outlook for Space*** study, in the mid-1970s a number of even more visionary efforts were identifying challenging future space goals. One notion which received wide public attention, but had a relatively modest influence on NASA's internal planning activities, was the proposal by Princeton Professor Gerard O'Neill that, primarily in response to the Earth's resource limitations, work begin on develop-

---

[60] U S Senate, Committee on Aeronautical and Space Sciences, ***NASA Authorization for FY 1977,*** Hearings, p. 1046

[61] *Outlook for Space: A Synopsis* (Wash ington, DC: National Aeronautics and Space Adm in istration, January 1976), pp. iv, V, 5-7

[62] Ibid., pp 55-56

ing very large human habitats in space—space colonies.[63]

A concept which *was* quite attractive to NASA's engineers was developed by Peter Glaser of Arthur D. Little, Inc.; this was the proposal that large solar arrays in geosynchronous orbit could provide a large source of continuous energy on Earth. The solar power satellite (SPS) idea was given a great deal of technical attention by NASA during 1975 and 1976, until NASA was forced by the Office of Management and Budget to turn over lead responsibility for SPS to the Energy Research and Development Administration (soon to become part of the Department of Energy).

Developing an SPS would require extensive use of on-orbit work crews in order to assemble and test very large structures in space. Similar construction requirements were derived from less grand schemes involving large antennas in space for communications use and scientific investigations.

By the end of 1975, NASA had developed an argument that space construction might be a major requirement of its programs during the 1980s, and wanted to explore the role of in-space infrastructure utilizing work crews in carrying out these construction efforts. In December 1975, the agency issued a request for proposals for a "Space Station Systems Analysis Study" (SSSAS); the study effort was to be focused around the use of a "space station" to "serve a wide range of operational base and space laboratory activities, " such as using the station "as a test facility and construction base to support manufacturing, fabrication and assembly of various sizes of space structures, "[64]

One finding of the system analysis studies was that scientific efforts could "go along for the ride" on ''space stations" capable of supporting construction, materials processing, and power generation objectives. An aerospace publication reported that:

> The space base concept is one whose time seems to be coming rather quickly. Until recently, "space stations" have been thought of mainly as . . . 'the traditional laboratory in the sky. ' Some observers were surprised when construction, materials processing and power were given roughly equal status with science . . . . Now, the balance has shifted further to . . . space construction work as the 'prime focus' of the studies.[65]

When NASA began this study effort in late 1975, its hope had been to use the Phase A study results as the basis for a Phase B "space station" "new start" in fiscal 1979—i.e., sometime after October 1978. However, NASA was unable to get the approval of the Office of Management and Budget to proceed on a schedule which would have made such a new start possible. Recognizing that NASA was not going to be able to start on a major "space station" effort anytime soon, by the spring of 1977 NASA officials were suggesting that "the (Shuttle) orbiter is a significant 'space station' in itself, " and were looking toward ways to enhance Shuttle capability to perform many of the missions that the SSSAS studies had assigned to a "space station. "[66]

Rather than being the year in which significant momentum behind a "space station" program was developed, 1978 turned out to be a year in which there was essentially no "space station" activity per se. The system analysis studies had identified, as important steps in extending the capabilities of the space Shuttle, the development of an in-orbit power supply and of Shuttle-tended unmanned orbital platforms for various **science and applications payloads. Both Johnson Space Center (JSC) and Marshall Space Flight Center (MSFC) were studying orbital** power supplies during 1978; the Johnson Space Center concept was called a power extension platform, while Marshall Space Flight Center was examining a 25-kW power platform.

Marshall also initiated studies of an unmanned Science and Applications Space Platform (SASP), and most of the MSFC study activities during the 1978-80 period were devoted to these two program concepts. ***(During*** 1980 and 1981, MSFC contracted with McDonnell Douglas to study an evolutionary program through which an unmanned platform such as the one defined in the SASP study could grow into a manned platform, i.e., a "space station, " perhaps along the lines that McDonnell Douglas had earlier defined in the 1975 Manned Orbital Systems Concept study.)

While Marshall's emphasis was on an evolutionary approach to space platforms, by early 1979 the leadership of JSC had decided that the Center's efforts should refocus on a major "space station" effort. *Aviation Week* reported JSC was "concerned about this lack of continuing assessment for permanently manned U.S. facilities" and was "mindful of the growing Soviet capability in this area. [67]' Another factor influencing JSC thinking was "a need for a real goal to maintain the dedication of present participants in the space program and the interest and enthusiasm of young people in space technology in order to motivate their pursuing engineering and science careers."[68]

---

[63]Gerard K. O'Neill, "The Colonization of Space,' *Physics Today,* September 1974.

[64]NASA Press Release, "NASA Seeks Proposals for Space Station Studies, " Dec. 11, 1975.

[65]" Operational Base Concepts Gain in Space Station Studies, " ***Aerospace Daily,*** **Sept. 13, 1976,** p. **54.**

[66]*Aviation Week* ***and Space Technology,*** **Mar. 16, 1979, P. 49.**

[67]Ibid.

[68]NASA, **Lyndon B. Johnson Space Center,** ***Space Operations Center: A Concept Analysis, Nov. 29, 1979,*** **pp. 1-1, 1-2.**

Based on these considerations, during 1979 JSC conducted an in-house study of a concept identified as a Space Operations Center (SOC). This study was based on two assumptions: "that the next 10 to 20 years will include requirements for large, complex space systems" and "that geosynchronous orbit is clearly a primary operational area in **space in the coming decades. " If these assumptions were valid, JSC argued, then "the space construction and servicing of these future systems wil l be more effective with a permanent, manned operations center in space. "**

The primary objectives of the SOC were identified as:

- **construction, checkout, and transfer to operational orbit of large, complex space systems;**
- **on-orbit assembly, launch, recovery, and servic**ing of manned and unmanned spacecraft; and,
- further development of the capability for perma**nent manned operations** in space wiith reduced dependence on Earth for control and resupply.

The SOC study noted that this list of objectives:

> . . . noticeably does not include onboard science and applications objectives, although the free-flying satellites which would be serviced would include mostly those of this genre. The primary implication of this mission is that experiment and applications requirements will not be design drivers; the SOC will be "optimized" to support the operational functions of these objectives. However, experiments or applications which can tolerate the operational parameters of the SOC can be operated onboard, or an entire dedicated module could be attached to an available berthing port.

The study developed a concept of a self-contained, continuously occupied orbital facility built from several Shuttle-launched modules. The initial SOC crew would be 4 to 8 people. **In addition to a core facility, the full-capability SOC would require a construction facility and flight support facility.** The costs of this fully capable SOC were estimated at $2,7 billion, with the total facility in place 9 to 10 years after program initiation. [69]

The Johnson Space Center briefed interested parties on SOC at the end of November 1979, in anticipation of initiating a contractor study of the concept during 1980. One account of this briefing suggested that "the 'space station' may be ready for a comeback."[70]

The following year would see a new administration take office and a new NASA Administrator appointed. The concept of in-space infrastructure would be looked at afresh.

[69] Ibid., pp 1.8, 1-13, 1- 19, 1 -24

[70] David Dooling, "Space Statlon May Be Ready for a Comeback, " *Huntsville Times*, Dec 9, 1979, p 4

Conclusions

It should be evident that there is no obvious cutoff point for an account of the development of the "space station" concept. Today's planning and proposals are a continuation of an evolution which has roots in the earliest years of this century and which has proceeded i n sporadic bursts of intensity over the past quarter-century. It is possible, however, to reflect on past experience in the context of the current situation. Such reflection reveals two levels of concrete justification which have been offered i n support of in-space infrastructure—i. e., "space station, " acquisition.

One set of justifications ties the need for a permanent human presence in orbit to a particular image of the future objectives of the civilian space program. According to this line of reasoning, a "space station" can be seen as:

1. a necessary way station in preparing for people exploring the solar system; or
2. an extremely valuable "national laboratory in orbit" for carrying out many of the research and development activities related to a balanced and diverse civilian space program with both scientific and application objectives; or
3. a centralized operations base from which the routine exploitation of, particularly the commercial exploitation of, both LEO and geosynchronous orbits can most effectively proceed.

In all of these justifications, in-space infrastructure is explicitly a **means** to achieving or facilitating a particular set of space policy objectives, and a decision to develop it would be tied to the more fundamental decision that those objectives were of sufficient priority to justify the investments required to achieve them, including the necessary infrastructure itself. Historically, what has happened at past occasions for decision on the course of the American space program is that other goals than those which would have required a "space station" were given preference:

1. In 1961, President Kennedy sought a dramatic space achievement in which the United States could best the Soviet Union. The choice of a lunar-landing objective and of the lunar-orbital rendezvous approach to achieving it as the response to Kennedy's need meant bypassing the development of Earth-orbital capabilities including "space stations. "
2. In 1969-71, President Nixon sought to reduce the priority and budget allocation of the space program after Apollo while still developing some new technology, maintaining a manned space flight element, and creating more balance among various program objectives. Within the scope of what he was willing to approve, there was insuf-

ficient activity to justify developing a major orbital laboratory, and the space Shuttle was selected as an alternative (and in NASA's mind, an interim) step until the level of space activity would become high enough to require such a facility.

From the perspective of overall policy objectives, then, the fact that a "space station" has been rejected as a part of the space program in the past can be interpreted primarily as a function of the particular stage i n the program's evolution at the time that its acquisition was proposed. Such rejections are best understood as national leaders saying "not yet" or "not under the current conditions, " rather than an outright "no." The issue then becomes whether the overall character and desired objectives of the Nation's space program for the rest of this century are now of a scope to justify acquiring in-space infrastructure as a means to achieve them.

Related to this point is an observation which springs clearly from this historical record: that the concept "space station" can be used to describe very different hardware configurations and technical capabilities, ranging from the von Braun toroidal concept of the 1950s, through the 50 to 100 person space base proposed by NASA in 1969 and the "construction shack" concept of the mid-197os, to recent proposals for a small and evolutionary station based on an unmanned platform. Historically, then, the term "space station" is extremely elastic, and an informed evaluation of a particular proposal must ask "what kind of 'space station, ' for what purposes, at what cost?" In this sense, the past history of the proposal is not particularly relevant to the current situation.

At another level of justification, the need for a permanent human outpost in orbit has been consistently seen by those with a broad perspective on future space activities as a necessary step in development of a capability to explore and exploit outer space, if that exploration and exploitation is to be pursued aggressively. Thomas Paine made this argument to Richard Nixon in 1969:

> **We** believe strongly that the justification **for proceeding now with this major project as a national goal does not, and should not be made to depend on the specific contributions that can be foreseen today in particular scientific fields like astronomy or high energy physics, in particular economic applications, such as Earth resource surveys, or in specific defense needs. Rather, the justification for the "space station" is that it is clearly the next major evolutionary step in man's experimentation, conquest, and use of space.**[71]

[71] Memorandum from Thomas Paine to the President, Feb. 24, 1969.

Current NASA Administrator James Beggs has made much the same point, saying that "a 'space station' is the logical next step in the history of our manned space systems. It will build on the achievements of the Mercury, Gemini, Apollo, and Shuttle programs. "[72]

This argument decouples station justification from any particular set of missions and suggests that a "space station" is a valuable, logical, and/or necessary step in developing the capability to pursue **any** future objectives in space. The underlying assumption is that the United States will want to pursue an active space program and that a "space station" is required to do so. This line of argument is frequently combined with assertions of the need for leadership or preeminence in space as a source of national pride and prestige and as a counter to the military and/or economic threats coming from other spacefaring nations.

This theme has consistently been put forth over the past two decades by advocates of a "space station." In the past, it seems as if they were "ahead of the curve' '—i.e.,., that in objective terms the U.S. space program had not yet developed to a point where the argument that a permanent manned outpost was indeed the logical next step in an aggressive space enterprise was plausible to those outside the space community.

The same argument is being put forth today; the question is whether it is any more plausible in 1984, as the U.S. space programs enters its second quarter-century, than it has been previously. Given the capability for easy access to orbit provided by the space Shuttle, it may be that having the ability to stay in orbit for extended periods for experiments or operations is now in fact a "next logical step." Or it may be that the program has not yet evolved, and is not evolving toward the kind of active future, in which the creation of permanent human presence in orbit is justified.

This historical review suggests that space advocates will continue to press their vision of the way to go about opening the space frontier and that a "space station" will continue to be an integral part of that vision. It is up to others in leadership positions to decide whether the vision of space held by those who are the heirs of Tsiolkovsky, Oberth, von Braun, and many others who have worked on the space program in this country is one which the United States will now embrace.

[72] James M. Beggs, "Securing Our Leadership in Space," *Astronautics and Aeronautics,* September 1982,

Appendix C
INTERNATIONAL INVOLVEMENT IN A CIVILIAN "SPACE STATION" PROGRAM*

Introduction

The National Aeronautics and Space Act of 1958, as amended, includes the following passage: "The aeronautical and space activities of the United States shall be conducted so as to contribute to . . . the following [objective]: . . . Cooperation by the United States with other nations and groups of nations in work done pursuant to this Act and in the peaceful application of the results thereof . . . ."[1] As a result of this provision, NASA has a long tradition of cooperation with other countries in space activities.

In accordance with this tradition, there have been extensive discussions over the past 2 years between NASA and other friendly countries regarding a possible international in-space infrastructure acquisition program. Then, in January of 1984, President Reagan in his State of the Union Address called for a U.S. "space station" with international participation. These circumstances indicate the importance of a full consideration of various international options for development, acquisition, operation, and use of future long-term, in-orbit infrastructure. The aim of this appendix is to contribute to this consideration.

Why International Involvement?

THE MOTIVES FOR COOPERATION

Countries engage in international cooperation in scientific and technical undertakings for a variety of reasons. In order to assess the potential advantages and disadvantages of international involvement by another country in a U.S. "space station" program (or even the advantages of fully internationalizing the program) it is first of all necessary to understand the reasons which lead nations to engage in international technical cooperation in general. These motivations can then be discussed as they apply to the specific situation of space infrastructure development, operation, and/or use in order to provide a framework for examining various degrees and forms of potential international involvement, from no involvement at all up to and including a space infrastructure enterprise which is fully multinational from the start.

There are both symbolic and utilitarian payoffs which lead a country to engage in international involvement in its technical activities through formal cooperative agreements. Among the national objectives served by such involvement are:[2]

1. **Symbolic Objectives**
   a. ***political and policy influence–a*** country may engage in international cooperation in order to influence political attitudes and policy outcomes in cooperating countries, in particular so that those attitudes and outcomes are compatible with its own national objectives.
   b. ***policy legitimization–a*** country may invite others to cooperate with it in order to enlist their support for a particular course of action that the country intends to pursue; broadening the base of involvement in a particular undertaking may increase its legitimacy both at home and abroad.
   c. ***policy commitment–a*** country may allow others to participate in one of its undertakings as a means of gaining their commitment to support some of its other policies.
   d. ***leadership–a*** country may invite others to join it in a common undertaking because it believes that such an intimate partnership will allow it to demonstrate clearly to others a leadership position.
   e. ***cooperation to encourage cooperation—a*** country may initiate or enter into a specific cooperative undertaking in order to demonstrate its commitment to the general principle of international cooperation as a desirable course of action.
2. **Utilitarian Objectives**
   a. ***division of labor and sharing of costs–a*** country may invite others to join in an undertaking it wishes to pursue in order to achieve a necessary or desirable sharing of the burdens, particularly the cost, of that undertaking.
   b. access ***to foreign resources—a*** country may open one of its undertakings to foreign participation in order to engage or have access to

---

*Paper prepared for OTA by Hubert Bortzmeyer, with revision by John Logsdon.

[1] National Aeronautics and Space Act of 1958, As Amended, Section 102(b)(7).

[2] This statement of objectives is adapted from Stephen M. Shaffer and Lisa Robock Shaffer, *The Politics of International Cooperation: A Comparison of U.S. Experience in Space and in Security* (Graduate School of International Relations, University of Denver, 1980).

unique or superior resources, both physical and human, available only in other countries.

c. economic influences-a country may invite others to participate in an undertaking **in order to increase the likelihood that** they will then purchase the products or services of that undertaking, rather than those of potential competitors.

This breakdown of the objectives of cooperation basically reflects the perspective of a country seeking to involve others in its activities; however, it also can be used to identify the reasons why others would agree to cooperate with that country. In general, one would expect those responding to a cooperative initiative to give highest priority to utilitarian benefits, but the symbolic payoffs from international cooperation can accrue, though not evenly, to all partners.

The United States has made international cooperation in science and technology—in space as in numerous other sectors-a major element of its foreign policy; most observers agree that the overall benefits of such cooperation in both symbolic and utilitarian terms have been substantial, and that the negative impacts have been comparatively insignificant.[3] Unless it begins a technical undertaking for motivations which are overwhelmingly nationalistic in character (e.g., Project Apollo or the Supersonic Transport) the United States has welcomed the participation of its closest allies. As international involvement in the "space station" program is assessed, this "bias" toward cooperation will be maintained.

INTERNATIONAL COOPERATION IN SPACE: THE RECORD TO DATE

In the 25 years that the United States has had a Government-funded civilian space program, international cooperation has been one of its major themes; as mentioned above, it was an explicit objective of the NAS Act. Armed with this legislative mandate, with Presidential and congressional support for a U.S. civilian space program which emphasized openness and scientific objectives, and with already existing patterns of cooperation in space science, NASA has since its inception conducted an active program of international partnership.

In space, perhaps more than in most areas of international science, it has been the policies and initiatives of the Government, rather than those of the scientific and technical community, which have established the U.S. attitude toward cooperative undertakings.[4] Although NASA's international programs have involved the Soviet Union, Canada, Japan, and various developing countries, NASA's primary cooperative partner to date has been Europe—both individual European countries and the various European space organizations which have existed over the past two decades.

International cooperation in civilian space activity is thus a longstanding tradition, especially in the field of space science, but also to some extent in space applications and space technology programs. As the general space policies of potential international partners in a space infrastructure acquisition program are reviewed, many examples of cooperative ventures can be brought to light. These range in scope from modest participation in minor projects to intense involvement in major undertakings on the basis of full partnership, An extreme example of the latter is the setting up of an intergovernmental consortium to carry out comprehensive programs in a particular technical field—telecommunications.

On the other hand, there are few examples of substantial involvement of foreign partners in programs which could be characterized as the main thrust of the national space policy of a given country, whether it be the United States, the U. S. S. R., or any other space-capable state. As a matter of fact, the only instance so far of such an arrangement is the involvement, since the early 1970s, of Europe and Canada in the development of the American Space Transportation System (STS).

But even that example is not really valid, since the hardware developments assigned to Europe (Spacelab) and Canada (the Remote Manipulator System, RMS), although producing valuable complements, involve a rather minor share of the total costs involved, on the order of 10 percent. Furthermore, what is really central in the STS is the American-built Shuttle. The other two items are accessory to it: the RMS could easily have been replaced with some U.S.-designed equivalent, and, if Spacelab did not exist, the STS

[3] The National Academy of Sciences has recently undertaken a review of scientific and technological cooperation among the **OECD countries which reaches this conclusion.**

[4] Another **area where Government** initiatives **were** crucial **in** establishi **ng patterns of international cooperation was nuclear energy.**

would still be able to carry out 90 percent of its intended activities. s

An invitation for international participation in a U.S. "space station" program might well have the result, as did the U.S. offer to **participate** in STS development, that foreign participation would be somewhat marginal in terms of both the scope and the nature of its share in the workload. A different outcome, however, is also possible, resulting in what was described above as a rather unusual circumstance: major foreign involvement in what will be the brunt of the U.S. effort in space over the next decade or more. Since the early seventies, space technology has been disseminating and/or maturing throughout the world, bringing certain countries almost to par with the United States in aspects of space technology relevant to a such an undertaking, and thus broadening the technical base for significant cooperation.

In order to understand which of these outcomes is likely and/or preferable, it is first necessary to detail the objectives which would lead both the United States and other countries to collaborate on a space infrastructure undertaking. As NASA's current Director of International Affairs has observed: "International space cooperation is not a charitable enterprise; countries cooperate because they judge it in their interest to do so. "[6]

U.S. OBJECTIVES AND INTERESTS RELATED TO INTERNATIONAL INVOLVEMENT IN A U.S. SPACE INFRASTRUCTURE ACQUISITION PROGRAM

In the first year of its existence, NASA formulated a set of policy guidelines for international cooperation in space. Those guidelines have survived periodic reexamination and remain in force today. They reflect "conservative values[7]" with respect to the conditions under which cooperation is desirable.

The essential features of NASA guidelines are:

- cooperation is to be on a project-by-project basis, not on a program or other open-ended arrangement;
- each project must be of mutual interest and have clear scientific value;
- technical agreement is necessary before political commitment;
- each side bears full financial responsibility for its share of the project;
- each side must have the technical and managerial capabilities to carry out its share of the project; NASA does not provide substantial technical assistance to its partners, and little or no U.S. technology is transferred; and
- scientific results are made publicly available.[8]

These guidelines have occasionally been bent, as in the case of the 1975 U.S.-U.S.S.R. Apollo-Soyuz Program. In general, however, they have provided an effective framework within which NASA has pursued a mixed set of objectives, including:

- Scientific/Technical
  - Increasing the number of qualified people working on problems of space research and space technology by broadening the base of involvement in space activities;
  - Shaping the development of the space programs in other countries by offering attractive opportunities to join with the United States i n "doing things our way"; and
  - Channeling the funds and technical capabilities dedicated to space in other countries away from activities which are competitive or not compatible with U.S. interests, but involving them in a program dominated by and largely defined by the United States.
- **Economic**
  - NASA estimates that it has achieved over $2 billion in cost savings and effective contributions from its cooperative programs over the past 25 years; cost-sharing has been an influential, though not top-priority, element of NASA's cooperative programs.
  - Involving other countries in expanded space activities may create new markets for U.S. aerospace products.
- **Political**
  - NASA's international cooperative programs have been designed to present a positive image of the United States to our cooperating partners; in particular, the contrast between

[5]The U.S. policy, as became **clear in 1972, was to ensure that foreign contributors to the STS should not have responsibility for any element which was essential to the success of the system. The only civilian space programs to which Europe has contributed or is contributing essential parts are the International Ultraviolet Explorer (IUVE) and the Spxe Telescope (ST). There is a strong push within NASA to limit the foreign role in any "space station' program to non-essential elements, but this push is being countered by an increasingly strong insistence, from the major ESA contributors at least, that potential partners be allowed to develop some of the key infrastructure elements, Of course, there is a natural resistance within U.S. industry to seeing foreign organizations provide what it could produce: witness, for instance, the Industrial opposition to the Canadian development of the RMS. It should be noted, however, that NATO partners are frequently given responsibility for developing essential components of defense systems, with consequent strengthening of the alliance.**

[6]Kenneth **S. Pedersen, "International Aspects of Commercial Space Activities, " speech to Princeton Conference on Space Manufacturing, May 1983.**

[7]Arnold Frutkin, *International* ***Cooperation in*** *Space* **(Prentice-Hall, 1965), p. 32.**

[8]Shaffer and Shaffer, *op. cit.*, **p. 18**

U.S. openness and Soviet secrecy with respect to space has been exploited by the United States.

— International cooperation in space has been undertaken by the United States in order to advance other U.S. foreign policy objectives.

While the priority given to these various objectives has varied over time and mission opportunity, at the core has been a policy that permitted this country's closest allies to become involved in the U.S. space effort. Indeed, some have criticized NASA for making possible such participation, at minimal cost, in an effort paid for almost entirely by U.S. taxpayers; "benefit, know-how and opportunity were shared to an extent which was totally unprecedented where an advanced technology was involved . . . ."[9] Since the start of its civilian space program, the United States has used international cooperation in space as a means of creating a sense of togetherness and common achievement among, particularly, the industrial democracies which are this country's most significant partners in maintaining world order.

The benefits to the United States of international space cooperation do not come without costs, of course. Among the potential negative impacts of involving others in the U.S. space program are:

1. increased technical risk and management complexity;
2. Significant out-flows of sensitive or valuable U.S. technology, employment opportunities, and/or hard currency, as the United States purchases space-related goods or services from other countries;
3. in particular, the development, through their involvement in U.S. space activities, of effective competitors to U.S. firms in commercial space efforts; and
4. possible disputes among the United States and its cooperating partners-which, if not resolved, could lead to broader foreign policy conflicts.

To date, NASA has managed its affairs so as to have minimized these potential negative impacts. For instance, many of the cooperative programs involved NASA's launching of foreign satellites, in which the technical risk to NASA was virtually non-existent and which often led to foreign purchase of additional launches.

FOREIGN OBJECTIVES AND INTERESTS RELATED TO INVOLVEMENT IN A U.S. "SPACE STATION" PROGRAM

Success in cooperative undertakings requires that each side perceives the cooperation as being beneficial to itself; such undertakings are even more likely to be successful if there is at least some commonality of objectives. All partners must believe that cooperation is a useful means for advancing some of their national objectives without undue costs related to others. It is somewhat more difficult to generalize with respect to the motivations which might lead specific countries or groupings of countries to decide to join the United States in development, operation, and/or use of space infrastructure, but the following seems most germane:

- **Scientific/Technical**

  In most areas of space technology, the United States is still a leader. Other countries may hope that close partnership with the United States will give them increased access to these technologies and help upgrade their own technical capabilities.

  The "space station" contains elements of space infrastructure which, used in connection with the space transportation system, will "modernize" space operations; other countries may decide they must be part of the most advanced way of operating in space,

- **Economic**

  — If the commercial potential of many areas of space activity is as large as some forecast, use of in-space infrastructure will be an essential or at least extremely useful means for achieving that potential. Other countries wanting to participate in the commercial exploitation of space may view sharing the costs of a "space station" program as the best way to be major partners in such commercial exploitation.

  — Cooperation with the United States may be the only way that other countries can afford to develop capabilities in particular areas of space technology. Division of labor and costs is a necessary approach for those without the resources to develop a total system of space infrastructure on their own. While the United States could probably afford to develop it on its own, as could the ESA countries in collaboration with Japan,[10] probably no other coun-

[9] Arnold Frutkin, "U.S. Policy: a Drama in N Acts," Spectrum, September 1983, p. 74.

[10] As noted later in this appendix, there is a considerable difference between the amount of taxpayers' money the United States on the one hand and Europe and Japan on the other are prepared to spend on space. But there is little doubt that Europe alone *could* make a comparable investment *if* the political will existed.

try or region except the Soviet Union and its allies could make a comparable investment in space.
- — Other countries may anticipate that such a program will provide marketing opportunities for their industries and want to participate in the program in order to maximize those opportunities.

. **Political**
- — Participation in the "space station," like participation in the space transportation system, may provide other countries a way of sharing in the political and prestige benefits of manned space flight activities without bearing the total cost of manned systems.
- — The United States is the military and economic leader of the non-Communist world; cooperation with the United States in such an effort may provide a way for other countries to maintain or increase their commitment to a political and military alliance with the United States.

THE POTENTIAL FOR AN INTERNATIONAL "SPACE STATION" PROGRAM

Some have suggested that any major new undertaking in space be from the start "truly" international—i.e., designed, funded, and managed by an international consortium or an equivalent organization .11 Although the current momentum behind "space station" plans is leading away from this option, it is worth identifying it here and assessing it later as a possible way of approaching its development or operation.

Such an approach would, of course, be the ultimate in the way of internationalizing a program; in this mode of cooperation, the United States would merely be a shareholder among many others within a consortium of participants. There are precedents in this respect; an instance which comes readily to mind is that of the International Telecommunications Satellite Organization (INTELSAT).

In 1962, the U.S. Congress passed the Communications Satellite Act, creating the Communications Satellite Corporation (COMSAT) and charging it with developing a global system for international satellite communications. The United States could not achieve such an ambitious goal without the active participation of other nations; therefore negotiations were started which led (after substantial conflict) in 1964 to an "interim agreement" under which a global network was successfully established. In 1969, a Plenipotentiary Conference was convened, with 67 member countries in attendance: it resulted in a Definitive Agreement which entered into force in 1973 and made INTELSAT a working international organization, with a present membership of more than 100 countries.

The U.S.S.R. and other socialist countries never joined INTELSAT, both because it was initiated by the United States and actually run by Americans during the first years of its existence and because they would have had very little influence on the organization under the weighted system of voting which was employed.

The International Maritime Satellite Organization (INMARSAT) has a number of features that are distinctly different from those of INTELSAT. It provides global coverage, whereas INTELSAT does not. Another difference is that among its member states, INMARSAT counts the Soviet Union (with a 14 percent ownership share, second only to the United States' 23 percent) and several other socialist countries. INMARSAT'S statute obliges it to provide free access to members and nonmembers.

INMARSAT was created pursuant to the initiative of a United Nations agency, the Inter-governmental Maritime Consultative Organization, which, from 1973 to 1976, convened a series of international conferences to establish a global maritime satellite communications system. In 1979, the INMARSAT Convention and Operating Agreement entered into force, and operations started early in 1982. With the exception of the above-mentioned differences, INTELSAT and INMARSAT are similar in structure.

Could a similar international organization be created, in order to develop, operate, and use in-space infrastructure? In principle there is no obstacle to this, although the parallel with INTELSAT can be very misleading. In particular, it is not clear that the provision of orbital infrastructure to accomplish a variety of objectives could ever be the kind of profitable enterprise that space-based communications has been. Communications is a well-established business, yielding a return on investment of about **14 percent within INTELSAT. Also, the capability upon which INTELSAT was originally based (communications satellites and launch capabilities) had been developed by the United States at its own expense.**

There are no such credible economic prospects for space infrastructure, which would have many different uses, some for pure government-funded research, others in the nature of a public service, and still others for commercial applications. Also, in a satellite communications system, there lies more cash-flow in the procurement of the ground segment than in the building of the satellites. This has made it possible for

11 See, for example, Robert Salkeld, "Toward Men Permanently in Space," *Astronautics and Aeronautics*, October 1979.

American firms to be the exclusive manufacturers of **INTELSAT satellites for years without stirring too much resentment within the international consortium, because other member countries have found adequate compensation** in the manufacturing of ground stations for themselves and for sale abroad.

Also, Europe, with its Ariane series of boosters, is now competing for INTELSAT launch contracts. In addition, some form of international cooperation was absolutely essential, almost by definition, for an international communications network to be feasible. No such cooperative imperative is attached to space infrastructure.

A more adequate precedent for an international "space station" enterprise might be that of an international organization created to conduct a number of jointly coordinated space programs for the benefit of its member states. Such a "limited partnership" may be a realistic approach to space infrastructure development and/or operation. To a large extent, the European Space Agency (ESA) does provide such a parallel.[12] Since its inception, ESA has performed very successfully in spite of the difficulties associated with almost all international organizations.[13] **In ESA's case, the two major problem areas have been, and still are: 1) the time and burdensome negotiations required to settle differences about general policies to follow and what programs to support; 2) the framing** of an "industrial policy" designed to improve the worldwide competitiveness of European industry while ensuring a "fair return" to individual members states (the "return" is the value of the contracts let by ESA to any member state, and it is "fair" when proportionate to that member's financial contribution to the agency's budget).

The Convention governing ESA provides some clues as to how these difficulties are dealt with in the long run:

1. The formal structure of ESA is designed to accommodate laborious negotiations and compromises. The legislative power, so to speak, rests with a Council where all states are represented; the Council meets regularly, usually for 2-day sessions.[14] There is also an Executive responsible for day-to-day operations and long-range planning.
2. ESA's overall activity is subdivided into two categories:
   mandatory activities, which include chiefly scientific programs and basic organizational expenditures; mandatory contributions are based on each state's GNP;
   optional activities, which are specific programs **like Ariane, Spacelab, Marecs, and so on; contributions to these programs are negotiated between the participants at the inception of the program.**

This system provides ESA with a considerable flexibility: although unanimous consent of all Member States is needed formally to permit ESA to undertake an optional program, a vote in favor of the program does not carry any obligation to participate. Member States may decide, **after** a program has been authorized, whether—and, if so, to what extent—they **will** participate. **Thus, Member states can adjust their financial effort to the degree of interest** they see in a program and/or to the "return" their industry will obtain from it (one of the solutions to the irksome "fair return" problem). Also, member states can support another partner's favorite project by a token participation which can be traded against others, resulting **i n** "package deals" which settle seemingly unreconcilable differences.

A further degree of flexibility is provided by the fact that the agency is not obligated to manage all of its programs through its own staff. ESA can delegate to a national agency the responsibilities for a program's management, if this appears to be preferable from a political, economic, or technical point of view (CNES, the French space agency, is thus entrusted with technical management of the Ariane development program).

3. ESA early recognized that a multinational agency is better off letting contracts to multinational industrial firms rather than attempting to balance contracts among national companies according to its "fair return" principle. This balancing act is often performed better and more quickly inside multinational consortia of European aerospace and electronics firms, the creation of which ESA has encouraged.

As a last parallel which might be drawn from ESA, it should be noted that this agency's role is generally limited to development and demonstration of space systems. Utilization, in the sense of operational or commercial exploitation, is usually entrusted to other intergovernmental organization, like EUTELSAT for regional European communications or EUMETSAT for meteorological satellites. Commercial operation can even be entrusted to private multinational corporations like ARIANESPACE, which has been established

[12] ESA is described i n more detail below.

[13] I ndeed, if one takes a long view of past European cooperation, saY, over 100 years, ESA's record is strikingly good. Although its operations have been on a much smaller scale than have those of NASA, ESA's record of technical successes is perhaps as good as that of any other organization.

[14] In general, each Member State has one vote in the Council. However, a Member State does not have the right to vote on matters concerning an optional program in which it does not take part. Except where the ESA Convention provides otherwise, decisions of the Council are taken by a simple majority of Member States represented and voting.

to produce, market, launch, and finance Ariane launch vehicles. This arrangement could be paralleled in an international "space station" program: different international entities, with possibly different membership and operating procedures, could take care of its development and operation.

As far as development and operation are concerned, one might question whether the creation of international entities in charge of these activities would entail creation of new technical agencies duplicating the know-how and resources of existing space agencies, most notably NASA. Clearly, this would not be an advisable course. However, the international body in charge of the program could confine itself to overall management, and rely on existing agencies in the participating countries for technical management, supervision, and day-to-day activity, a procedure similar to that sometimes followed by ESA. Given that the United States would undoubtedly be the largest shareholder in such a joint venture, it should be possible to have the leading role assigned to NASA and/or the U.S. private sector in this context. Other major agencies like ESA (Europe), NASDA (Japan), CNES (France), or DFVLR (West Germany) would as a matter of course have to be entrusted with tasks commensurate with their country's or region's financial commitment.

THE POSSIBILITY OF A U.S. DECISION TO "GO IT ALONE" WITH RESPECT TO THE "SPACE STATION"[15]

Of course, there is the possibility that no other country will reach agreement with the United States to cooperate in the acquisition and use of in-space infrastructure. In this unlikely situation, the United States would "go it alone. " Would such a step deal a fatal blow to all future prospects of international cooperation in space? There seems to be no reason to fear such a drastic outcome: what would probably happen is merely an extension into the future of the present situation, characterized by a large amount of duplication, with most countries striving to acquire more or less the same capabilities so as to be able to compete, especially where commercial applications are concerned.

The same countries, however, are now willing to participate in quite a large number of cooperative schemes, not only in the field of space science (reputedly free of competition), but also in general public service types of applications (e.g., meteorology or search-and-rescue), and even in commercial applications (e.g., communication via INTELSAT, INMARSAT, or INTERSPUTNIK). Cooperation, in other words, seems to be a widely recognized way of performing space activities, provided a certain amount of autonomous assets have been secured to safeguard national independence and ability to compete, so that if this U.S. offer to cooperate is not taken up on a program as central even as the "space station, " this situation is unlikely to be reversed,

That such duplication does not make optimal use of the global resources of the international community is obvious, but by no means new. If one accepts it, the next question, from a U.S. perspective, is whether other spacefaring countries, not being involved in the U.S. program, would thus be motivated to challenge U.S. supremacy in space and to compete commercially with it even more effectively and better than they do now. In other words, what are the implications if other countries strive to acquire more or less the same capabilities as the United States is seeking by developing space infrastructure, but on their own and not in partnership with the United States?

It should be noted first that acquisition of similar capabilities does not necessarily require development of similar technology. The capability to launch satellites, for instance, can be provided by a very sophisticated reusable craft like the Shuttle, or by less inexpensive expendable rockets. Similarly, it could turn out that most or all functions of space infrastructure that utilize a human crew could eventually be performed by one or several automated systems. This certainly seems to be true whenever a single specific activity is under examination: materials processing in space, for instance, could perhaps be adequately performed in an operational production mode by an unmanned platform along the lines of the French SOLARIS concept.

Therefore, when specific activities are considered in isolation, there appear to be ways for other countries to remain competitive in space applications without joining a U.S. "space station" program. However, when looked at from a global perspective, a comprehensive space program is more than the sum of a few specific application projects. U.S. development of long-term space infrastructure would mark the inception of a new way of performing activities in space; the hoped-for result would be enhanced flexibility and economies of operation in many areas of space science and applications, whether already recognized or presently unforeseen.

[15] The circumstances adduced at the beginning of this appendix provide reason to believe that a U.S.-only program is the least likely alternative, However, since no final Congressional decision on international participation in any U.S. "space station" program has been made—and since the Congress may wish to reconsider this matter *denovo*—the U.S.-only option is included here

Any country wishing to gain access to this new way of doing business in space would have to acquire an extensive set of technologies and systems:

1. Orbital communication relays. (The United States is developing such relays in the form of the Tracking and Data Relay Satellites; similarly, ESA's L-SAT will have orbital capabilities and will be used in this role for the control of EURECA).
2. In-orbit servicing (and probably retrieval) systems. (The United States has flown a short-range system of that kind, the manned maneuvering unit (MMU), which enables people to tend satellites in the vicinity of the Shuttle, To go further along this line, NASA will have to develop the so-called Orbital Maneuvering Vehicle (OMV)).
3. The capability of returning space hardware from orbit to the surface of the Earth via unmanned vehicles. (This is a capability which the United States has bypassed through development of the Shuttle) and/or;
4. Ultimately, man-rated launch and reentry vehicles (unless automated systems or systems remotely controlled from the ground suffice. to perform all the space tasks for which the need for human beings is currently foreseen–a possibility which is debatable at best).

Even if one takes into account that such capabilities need not rest on facilities identical (in terms of size, sophistication, etc.) to those deployed by the United States, the cost of their creation is nevertheless likely to be several times higher than the cost of creating and maintaining independent "traditional" satellite building and launching capabilities.

Consider, for instance, the total development and flight testing cost of Ariane 1: roughly $1 billion (1984). The corresponding cost for the Shuttle exceeds $10 billion. The Shuttle's payload capability is much greater than that of Ariane 1, especially in LEO. But the important point is that Ariane suffices to endow European countries with the capability to launch all the applications satellites they need, and even further, to market launch services abroad, competing commercially with NASA and the U.S. private sector in that field. (One might state more accurately that the real competition will come from the Ariane 2, 3 and 4 versions, which together will cost about an additional $400 million beyond the initial development expenditures: the argument, however, still holds true.)

Suppose now that Europe decides to acquire a manned flight capability of its own. A typical way to do that (as explored in ESA's "long-term preparatory program") would be to develop an even larger version of Ariane, with a LEO capability around one-half that of the Shuttle: under the name Ariane 5, various preliminary designs for such a vehicle have been publicized. These designs are compatible with a winged reentry vehicle, looking somewhat like a down-scaled Shuttle, which under the name HERMES has also been through early design stages in France. Both craft could operate automatically but could also transport people.

No cost estimates have been officially quoted yet, but independent experts, by extrapolating from other European and U.S. program costs, predict $2 billion to $4 billion as the price for acquiring such a minimal capability. This is much less than what it took to develop the Shuttle, but 2 to 3 times what it cost to develop Ariane. Of course, in order to exploit such a staffed flight capability properly, if it is not to remain only a prestige enterprise, all space activities must be adapted to the "new way of doing business in space." Today's European satellites, for instance, do not lend themselves to servicing in orbit; all sorts of new techniques would have to be adopted for that purpose, such as modules easy to plug out or in; built-in, readily accessible and readable check-out circuits; safety devices destined to protect the astronauts' lives, and so on.

In turn, even if this proves to be economical in the long run, it would call for increased investment at the start. Added to the higher operating costs of manned space flight, the overall consequence of all these considerations amounts to this: in order to acquire the capabilities which go with the new way of conducting space activities, medium space powers like **Europe or Japan would probably have to multiply their space budgets by at least 2 to 3 times. However, the ratio of civilian space expenditures to gross national product** (GNP) in Europe and Japan is much smaller than the corresponding ratio in the United States—i.e., roughly 4 times less. There is therefore room for expansion, but such a major shifting of gears would require a reassessment of national priorities in all the countries involved, and there is no sign that such a reassessment is imminent.

A last question to address is whether another alternative is open to these countries: again assuming that the United States goes ahead alone with the development of a "space station" and all the attendant new technologies, must countries wishing to enter into or stay in the space business of necessity develop similar capabilities? In other words, could "doing business in the old way" be competitive when faced with the "new way, " just as expendable launch vehicles from Europe, Japan, and the United States seem to be managing to stay in competition with a very new and different craft, the Shuttle?

Two factors will have a deciding influence on this question:

1. Economics
- The relative importance of captive markets;
- charges applied to users: the very sophistication of new systems may, at least in the initial phase, lead to high operational costs; this argument is further complicated by the fact that user's charges do not necessarily reflect actual costs. If the United States decided to go ahead for reasons of its own, not all of which were economic ones, it probably would not fully amortize costs through user's charges; other suppliers of space services might do the same, to facilitate export sales, for instance;
- the fact that the key area of commercial competition in space utilizes the geostationary orbit, whereas the "space station" and its related new capabilities will at the start focus on LEO activities, and will extend their sphere of operations to geostationary orbit much later; meanwhile, business can go on as usual in that orbit.

2. **Political and Technical Trends**
- One of the major impacts of "space station" technology will be in the field of construction and assembly of large structures or platforms in orbit. Presently, however, there seems to be a trend in favor of small or medium-sized satellites which fit the needs of one given country or group of countries eager to possess its own independent system. Small to medium-sized satellites would probably also appeal to commercial operators (in the United States and elsewhere) who might find it of advantage to own a system built along their specifications rather than to lease a segment of a larger system.
- However, even small/medium satellites might benefit from new methods of operating in space. The capability to check a satellite in low orbit before transferring it to its final orbit to start operation there, or the capability to repair it when it fails, may be a significant commercial advantage which no prospective customer is likely to overlook. However, the economic attractiveness of satellite servicing is still a very controversial matter; lb anyway, from a strictly financial point of view, a customer could be presented with the same advantages by an adequate system of warranty. But the psychological appeal would clearly be in favor of the servicing capability.

[16]The reluctance of those concerned to meet the relatively low costs of retrieving and refurbishing WESTSTAR 6 and PALAPA B-2 indicate that in-orbit retrieval and repair are not yet economically attractive.

At the present stage, it would seem that neither economic factors nor political and technical trends yield a clear answer to the question of whether there is an alternative way open to countries unable or unwilling to acquire in-space infrastructure. This is a major reason to believe that the U.S. offer to cooperate with other countries will be accepted by other spacefaring nations, at least to the minimum extent necessary to see what happens. Whether such minimal participation is in the U.S. interest will be discussed later in this paper. But the conclusion of the reasoning and analysis just presented is inescapable—as the United States **begins a space infrastructure program, others will want to be part of it, provided the cost (in all senses of the term) is not too great.**

Possible Modes of International Involvement in a U.S. "Space Station" Program

There is a wide variety of possible forms that international cooperation in a space infrastructure program might take. This section describes two general categories of involvement, each with several variations:
1. international cooperation during "space station" development, then separate deployment of operational systems; and
2. international cooperation throughout the deployment, operation, and use of the "space station ."

JOINT DEVELOPMENT, SEPARATE DEPLOYMENT

If the United States and/or its potential international partners believe that free and open competition in utilizing space is preferable (or unavoidable), and if these countries nevertheless want to save on development costs and prevent all-out duplication of efforts, then this option will be attractive. joint development of a total system or a piece of hardware, followed by separate or independent deployment, operation, exploitation and/or sale is a commonplace arrangement in, among others, aerospace programs. Many military and civilian aircraft have been or are being born that way, at least in Europe. The United States seems to favor separate development followed by licensing agreements, but there are examples to the contrary (e.g., the joint development of the CFM 56 jet engine by General Electric and the French SNECMA).

Among the reasons that other countries might want to commit only to joint development, reserving the right of separate deployment of constituent elements, are:
1. Going along to see what happens. This would typically be the attitude of countries or agencies feeling rather skeptical about the benefits to be

derived from use of in-space infrastructure, but which deem it necessary to be at least symbolically present in the game, just in case it turns out that their skepticism was ill-founded. Such partners may not be of the most active sort, but they also will not be troublesome, since the very reason of their being present is "to follow the leader." Presumably they would not be interested enough in the joint undertaking to fund cost increases if the program should meet with difficulties, and would therefore attempt to settle for a fixed amount rather than a fixed percentage type of participation.

2. Going along to acquire some of the know-how and of the technologies to be derived from the program. This would be the attitude of countries or agencies with a positive attitude towards new systems, but which are not in a hurry to deploy and use them, so that they only want to acquire knowledge to be implemented in a much later perspective. Along with other, more "political" motivations, this seems to be what prompted Europe to join the post-Apollo program. There was also a more immediate industrial motivation; Europe hoped to sell to NASA more units of the hardware developed by European firms, and NASA has indeed purchased a second Spacelab flight unit in Europe. This type of motivation is apt to create problems, insofar as it raises the issue of technology transfer or dissemination.
3. Going along in order to & able to deploy a separate system at about the time that the primary partner deploys its own. This is a sign of real interest to the program, insofar as it means that all parties truly believe in it. However, it might well generate more problems than would the preceding ones. It is indeed unlikely that all parties concerned will aim, through their joint development efforts, towards development of strictly identical infrastructure elements. As a consequence, a number of compromises would have to be accepted by all (or some of) the participants to reconcile differing specifications. Any given participant will tend to specify the work assigned to it so that it serves directly (or with the smallest possible amount of modification or adaptation) its own national interests. However, the end product of the same work, if the joint endeavor is to make any sense, must also be readily adaptable to what other participants plan to construct. In a rather grossly exaggerated way, this is a situation akin to ESA and NASA trying to agree on a definition of Spacelab which would enable it to be launched either by the Shuttle or by Ariane.

Such compromises are by no means impossible, but must be evaluated on a case-by-case basis to make sure that the overall cost of the compromise design and of its adaptations to specific needs does not exceed the added costs of separate developments. Furthermore, such a compromise design is inevitably difficult to agree on, for all parties tend to believe that it is to them that will fall the largest amount of modifications to be made later to adapt the common development of their specific needs. These, however, are problems inherent in all cooperative development programs, and past experience, notably in the field of aeronautics and armaments, proves that they can be settled whenever a strong sense of common purpose prevails.

While, for one or more of the reasons sketched above, joint development without a commitment to joint operation or utilization may be attractive to a potential cooperating partner, it would appear that the United States might prefer a more comprehensive cooperative approach, as described below. However, there may be reasons for the United States to avoid commitment to international involvement beyond the development stage. Among such possible motivations are:

1. A feeling that national security applications in space might evolve in such a way that the United States would prefer to deploy its own infrastructure so that it could control access to it; this is not necessarily a problem since provisions for such restriction could be part of an international agreement.
2. A similar argument could be made if, particularly, materials processing activities appear quite promising commercially and U.S. firms prefer a U. S.-only "industrial park" in space.
3 The United States may prefer a safety valve freeing it from the need to continue a joint effort if there is a likelihood that the cooperative experience during the development phase is not satisfactory on technical, economic, and/or political grounds.

In addition to all of the above, dissatisfaction with joint development programs sometimes crops up, not from problems directly related to the development phase of the undertaking, but from an apparent or real lack of benefits deriving from the joint effort once it has carried through. This leads one to examine what benefits can be expected, and what sort of framework is needed to ensure that they can be reaped.

1. Each party deploys and uses for its own purposes one or several units of the jointly developed hardware. (Construction would presumably be shared among industrial firms which built the proto-

types.) This approach is feasible if integrated systems have in fact been jointly developed; however, as stated earlier, this may not necessarily be the usual case, as agencies and administrations involved will tend to prefer clear-cut interfaces rather than closely integrated systems.

2. Assuming then that each participant has developed a self-contained system (e.g., the United States develops a core element and country X a teleoperator maneuvering system (TMS) compatible both with the U.S. element and country X's own spacecraft and launch vehicles), several options are possible:
   - Participants in joint development efforts make no provisions for the post-development phase, and leave it to evolving circumstances and economics to ensure a successful career for the developed items. (For example, if the U.S. elements are sound ones, country X will purchase one or more, and vice versa, provided no legal obstacles or perceived national security concerns regarding these sales arise).
   - Make it an obligation for all par-ties to purchase (and agree to sell) one or several units of the hardware developed by each.[17]
   - And, of course, all possible intermediate arrangements between these two extremes. (To use a simplified example: the United States could be obligated to use country X's teleoperator maneuvering system, not by purchasing it but by offering as a compensation a given amount of "utilization time" on elements of its infrastructure; reciprocally, country X's obligations would be to provide and maintain a given number of these TMS vehicles.)

A "closed-end" international partnership appears to make the most sense if the infrastructure is a" necessary, but not sufficient, part of the capabilities required for effective and efficient operations in space. All partners will want to ensure that whatever is developed will be compatible with their longer range, but separate, plans for space. However, this kind of limited international involvement is less likely in most situations to be attractive either to the United States or to its potential partners than more substantial involvement in the operation and utilization phases as well as the development phase. The following section examines such an approach.

[17] Such an explicit obligation would circumvent the possible unwillingness of one party to purchase elements from another. From the European point of view, U.S. unwillingness to purchase additional Spacelab modules has been something of a problem.

JOINT DEVELOPMENT, OPERATION AND USE

The essential features of this option are:

- operation and maintenance costs of the infrastructure, as well as development costs, would be shared;
- ownership of most or all of its elements would stay most probably with the United States; however, all participants' rights of access and use for common and/or national purposes, including mutual commercial competition, would be guaranteed by an adequate legal framework.

Implementation of this approach is essentially a three-step process, where each step has to be considered separately before an overall conclusion is made:

1. **Joint Development**

   Most considerations just set forth in the section above are applicable here. In a way, however, there are fewer problems; the ultimate purpose of joint development being the deployment of elements to be used jointly, there is less need for involved legal rules concerning mutual purchasing obligation, second source development, and so on. Nor does one have to be concerned about compatibility of certain sub-elements with individual countries' nationally developed launch vehicles and the like. (Unless of course some participants wish to be able to break the partnership and go their own ways, but this would not be set as a primary objective of the arrangement.)

   Needless to say, though, "rules of the game" are still indispensable, especially in three areas:

   Settling the ownership of technology acquired while carrying out the joint development, and transfer of technology, where required, for accomplishing the work;

   Assuming a dominant position of the United States in the undertaking, how much potential leverage will be left to its partners in order to give them a feeling of being able to protect their rights?

   Conversely, one has to retain for the United **States the possibility to work out substitute arrangements, in the event that one or another of the partners defaults, so as to ensure the ultimate integrity of the program,**

2. **Joint Operation**

   jointly developed infrastructure can be used jointly while being operated by a single country—presumably the United States. joint operation would, however, lend a more international flavor and help international participants to feel more secure by giving them added leverage—

with, of course, potential problems for the United States.

International involvement in operating the infrastructure could range from very little (opening a few positions to foreign nationals on the ground control team and possibly in the orbital crew, as a token gesture) to full-fledged internationalization of both ground team and crew. The latter would imply including citizens of other countries in various key positions in numbers proportionate with the overall level of participation of their country in the program.

The latter case, even if likely to create problems for the United States by the leverage and the visibility it gives to its partners, might, however, also pave the way towards solution of one issue raised by this approach—the question of "equitable costs." Assuming that the United States develops, say, 95 percent of a "space station" system, and that country X develops and builds 5 percent of it, it seems fair to reserve 5 percent of the station's effective working time for country X's purposes. If, however, the United States is alone in bearing all the maintenance and operating costs, X cannot enjoy its *5* percent "space station time" free of charge. Some equitable reimbursement scheme has to be devised for maintenance and operating costs incurred by the United States—a scheme that would resolve attendant problems of fair and accurate accounting, opening U.S. accounts to X's comptrollers, devising rules for taking into account all the fringe benefits built in the system (like the replenishment of propellant tanks with unused fuel from the Shuttle, and so on). However, if country X actually carries out 5 percent of the maintenance and operations in kind, it may be possible to end up with an almost no-exchange-of-funds situation.

3. **Joint Utilization**

The problem here is that there will be not only utilization in common for common purposes, but also an individual participant's use of the infrastructure for its own benefit, including commercially competitive types of usages.

International partners will want to be provided with adequate safeguards to protect their legitimate rights. This, in turn, raises the question of what are "legitimate rights." An effort should be made to define this concept as precisely as possible. Listed below are what appear to be major issues involved:

— Is thereto be unrestricted use of a given fraction of the "space station's" effective work time, for the user's own benefit, for whatever purposes, provided it complies with international law and a preset series of explicit rules? These rules must not be open to unilateral interpretation. Sensitive aspects, such as safety and national security requirements, must be exhaustively and accurately dealt with in advance, so as not to allow, later on, the impression of arbitrarily imposed requirements. This right-to-use may not necessarily be free of charge, but if a price has to be charged for it, it must be equitable (no preference with respect to the U.S. Government or private users, no hidden overheads, etc.). As stated above, the ideal situation would probably be one where very little or no exchange of funds occurs. The setting of utilization priorities is equally important in this connection; the present NASA-DOD arrangement for giving absolute priority to national security payloads in Shuttle manifesting would not be likely to generate much international enthusiasm if it were paralleled.

Cancellation clauses must be very explicit and provide for adequate prior warning and compensation; unilateral recanting should not be allowed. Needless to say, the purpose of such clauses would not be limited to protection of U.S. partners; the latter would have to consent as a counterpart to a perdurable involvement system, in order to allow not only for the infrastructure's initial deployment, but also for the continuous evolution and growth which is going to be one of its main features.

There seems to be no reason why all the above-mentioned issues could not be settled in the terms of a cooperative agreement among the United States and its partners. Legal terms, however, would probably not be sufficient to enable all parties to the undertaking to feel safe and secure: safeguards embedded in the very fabric of the joint effort, providing mutual leverage and affording room for the inevitable compromises, may have to be accepted.

On the surface at least, such a situation might appear unbalanced in the eyes of the U.S. public and Government: the United States will probably be carrying most of the burden of the joint undertaking, and would seem required to provide to others guarantees and safeguards and to accept dependence on them in excess of what would be commensurate with its partners' share of the burden. To most of these partners, however, being involved substantially in a U.S. "space station" program would mean forfeiting their ability to develop not only a similar, but even a re-

duced, capacity of their own, at least in the near term. Therefore, they will be staking the whole of their initial asset commitment in the joint venture, whereas the United States would always be in a position, with some added funds and efforts, to make up for the failure of one of its partners to keep the deal—a recourse that, under the circumstances, would be more costly to the partners.

From the U.S. point of view, of course, accepting international participants in its "space station" program makes sense only if this apparent–and, to some extent, real—imbalance does not jeopardize fundamental national interests. The more guarantees and safeguards the United States can afford to offer to its potential partners, the more those countries are likely to participate substantially and to pay accordingly. This working out of mutual stakes in a common undertaking is likely to be a delicate and complicated process,

Potential International Partners

Now that potential modes of cooperation have been discussed, the potential partners for the United States in a "space station" effort will be described in some detail.

Advances in space technology over the last decade throughout the world provide many prospective candidates for bilateral or multilateral cooperation on a space station project. One should, however, keep in mind that taking a meaningful share in a program of such scope, cost and technical sophistication, will be no trivial undertaking for most of these candidates. What is meant by "meaningful share" depends, of course, very much upon the circumstances. In a bilateral arrangement between the United States and another country, the latter's supplying less than 1 percent of the infrastructure's value in hardware or commonplace electronic components can hardly be termed meaningful. On the other hand, in the case of a broad multilateral organization comprising many countries, large and small, with shares ranging from a fraction of 1 percent to several 10s of percent, a participation similar in level and kind to what has just been described might well be meaningful to the participating country.

Another factor to be taken into account when considering joint ventures in advanced technological developments is, obviously, the relative level of industrial development of the participating countries. Countries with more or less comparable industrial backgrounds, similar technical outlook and mutually compatible management practices will find it easier to pool their resources.

This description of potential international partners will focus first and foremost on those industrialized countries which at present are displaying a certain amount of interest, or at any rate curiosity, toward "space stations." This list includes Europe–as a whole through the European Space Agency and as exemplified by countries like France, the Federal Republic of Germany and Italy–and Japan and Canada.

Among the industrialized countries, the Soviet Union also deserves some mention, though hardly as a likely participant in a U.S.-sponsored program. Rather, as a major space power already engaged in its own program of developing, emplacing, and using in-space infrastructure, the Soviet Union is a potential competitor to the United States in offering opportunities for international involvement in such activity.

Among the developing countries, some have acquired enough space technology capability to design and build indigenous satellites and launch vehicles (China, India), and others have ambitious plans to do so in the future (Brazil). These and others deserve some attention, especially as possible participants in a broad multilateral effort.

EUROPEAN SPACE AGENCY

Although joint European endeavors in space date back to the early 1960s, the present European Space Agency (ESA) was founded in May 1975. ESA was the successor to two earlier organizations, the European Launcher Development Organization (ELDO) and the European Space Research Organization (ESRO). It is of interest to recall briefly the history of these organizations, insofar as it sheds some light on U. S.-European relationships in space endeavors as well as on how international space organizations perform.

In 1960-1961 a number of European countries (Belgium, France, Germany, Italy, the Netherlands, and the United Kingdom) became aware of the political and scientific benefits to be drawn from space activities (awareness of potential economic benefits emerged some years later). They understood also that a pooling of their resources and efforts was necessary to compete with the United States and the U.S.S.R. i n at least certain key areas—leaving out the development of staffed capabilities in which the superpowers were competing strongly for what appeared to be essentially national prestige reasons. These countries also recognized the importance of a comprehensive program including satellite as well as launch vehicle development.

ESRO was created to deal with satellite development, and it did so successfully. From 1967 to 1975, ESRO launched (with U.S.-built rockets) nine satellites,

conducted a large number of experiments in space, engaged in successful cooperative projects with NASA, and managed to have its mandate enlarged to encompass applications satellites. The organization built up a competent and well-organized executive and technical staff which ran three technical field centers and a network of tracking stations.

ELDO, meanwhile, kept running into trouble, although it had only one project to deal with, the development of Europa, a medium-size rocket, roughly equivalent to the U.S.-built Atlas-Agena. Poor management structure was the main source of trouble; ELDO had almost no authority of its own, but acted as a sort of coordinating agency for separate national projects (a British first stage, a French second stage, a German third stage, Italian payload fairings, etc.). Additional problems arose from the fact that system and subsystem development had to proceed in parallel. The first stage was virtually completely developed at the start of the program and suffered only one minor failure in nine flights. Each of the remaining stages experienced failures on its first operational flight as an element of the complete vehicle: as a result, there was a string of six failures in which, in turn, each major element became successful.

The program was further marred by a formidable escalation of costs, and, when its eleventh test flight ended in failure at the end of 1971, it was finally canceled after $700 million had been spent.

At about the same time, the United States had stimulated ELDO, ESRO, and their member states to consider whether Europe should build a major segment of NASA's proposed space transportation system (STS), then referred to as the "post-Apollo program." By **1972, agreement seemed to be within reach; the task allocated to Europe was development of a "space tug," an advanced rocket-stage** to be used to transfer payloads from the Shuttle's low orbit to higher ones, including the commercially essential geostationary orbit, The tug appeared to be a good candidate for cooperation, insofar as it was indeed an important segment of the STS—almost a key one—and because in developing it, Europe could draw from its unhappy but extensive experience in rocketry. Furthermore, it would enable Europeans to keep working and making progress in what they felt was an essential area–i.e., launch vehicle development.

In mid-1 972, however, the United States decided to withdraw the space tug proposal, "partly because the entire post-Apollo program was being scaled back, because of doubts about European technical capabilities, and also because the Air Force thought the military potential of the tug was too great to permit dependence on outside sources."[18-19]

Also, during the same period, France and the Federal Republic of Germany (FRG) were negotiating with the United States for the launching of their jointly built Symphonic telecommunications satellite, which the cancellation of the Europa project left without a launch vehicle. The United States agreed initially to launch Symphonic, but required that the satellite be declared experimental rather than operational. The United States thus complied with its policy of assisting with launchings provided they were for peaceful purposes and in compliance with "relevant international arrangements." This was a reference to the INTELSAT Agreement which required signatories to avoid "significant economic harm" to the organization caused by regional competition, To France especially, and perhaps to a lesser degree to the FRG, these conditions were construed as an attempt by the United States (and other INTELSAT partners who shared in this position) to keep them out of the expanding satellite telecommunications business.

These events acted as catalysts in the setting up (in 1973) of the principles which were to govern the future ESA as well as in the drafting of its program. Based on unsatisfactory European experience in obtaining U.S. launch assurances, the French found excellent grounds for advocating development of an autonomous European launch capability, and succeeded in obtaining from its partners a 40-percent participation in the previously French-only program to develop the Ariane launcher. The FRG, though disappointed by the withdrawal of the tug proposal, nevertheless sought out European participation in the U.S. space transportation system through development of a "sortie laboratory," later named Spacelab.

The United Kingdom agreed to go along with a "package deal" which was worked out in July 1973, whereby France funded 60 percent of Ariane, the FRG about the same percentage of Spacelab, and the U.K. 56 percent of a European maritime communications satellite, later called MARECS. Each of the three countries also agreed to take a minor share of the two others' favorite projects. With this "package deal" accepted, the creation of ESA could proceed, and the agency began operation in May 1975. The stated objectives of the ESA include:

---

[18] *Civilian Space Policy and Applications* (Washington, DC: U.S. Congress, Office of Technology Assessment OTA-STI-1 77, 1982), p. 363.

[19] A more detailed discussion of European involvement in NASA'S post-Apollo efforts is provided below.

- developing and implementing a long-term space policy;
- carrying out space activities;
- coordinating the European space program and the space programs of its member states; and
- developing and implementing an industrial policy appropriate for its programs.

The agency, in addition to carrying out major but optional projects such as Ariane and Spacelab, carries out a space science program planned on a 5-year basis. This science program and ESA's operating budget call for mandatory financial contributions from its member states. Table C-1 lists the current distribution of such contributions for the ESA science program. I n constant-dollar terms, the ESA budget for mandatory programs has remained virtually constant since the organization's inception.

ESA runs a comprehensive set of space programs.

1. **Communications Satellites-a** broad and vigorous program, with several satellites in orbit (OTS, an experimental spacecraft, and MARECS, leased to INMARSAT to provide operational maritime communications); with more to be launched (ECS-1 and -2, for the purpose of setting up a regional satcom system); and with a large communications satellite (L-SAT) under development. The first L-SAT payload includes four different experiments, one of which is to test direct-to-the-home TV broadcasting.
2. **Remote Sensing–as** a contribution to a global program set up under the auspices of the World Meteorological Organization, ESA launched two METEOSAT geostationary weather satellites similar to the U.S. GMS. The second of these satellites was carried in orbit by ESA's own launcher (Ariane), and ESA's member states have agreed to keep the METEOSAT system in operational condition for at least 10 years (by replacing the satellites when they fail in orbit). The Agency also has under development an advanced coastal and oceanic monitoring satellite (ERS-1) equipped with a radar and other microwave instruments. Other remote-sensing activities are also underway (data reception and dissemination, Spacelab-borne high-resolution camera).
3. Space Sciences-ESA has pursued ESRO's tradition of ambitious scientific satellite projects. Four of these are presently operating successfully while several more are in the development phase. Most notable is GIOITO, a spacecraft to fly by Halley's Comet in 1986. Science also is an area where cooperation with NASA has been and is extensive; ESA is contributing several major subsystems on the Space Telescope. The two agencies also had a joint program called the International Solar Power Mission (ISPM). This was a rather sophisticated plan to send two spacecraft (one U.S.-built and the other European-built) over the two poles of the Sun. In 1981, because of budget cutbacks, NASA chose to withdraw its spacecraft from this enterprise, creating frustrations and resentment not only within the scientific community but also within political circles in Europe. The ISPM has gone ahead but now includes only a European spacecraft launched by NASA. The impact of this withdrawal is discussed later in this appendix.
4. **Launch Vehicles–this** is an area where the dual nature of ESA's policy is best shown. On one hand, the Agency actively pursues its Ariane autonomous launcher program, aimed in part at competing commercially with U.S. launch vehicles; on the other hand, it is locked in, through the Spacelab program, to the use of the U.S. Shuttle. Concerning Ariane, in spite of two setbacks (failure of one development flight out of four and of the first operational flight attempted late in 1982), there were (as of July 1984) 7 successful launches out of 9 attempts, and it is definitely a technical success. The more powerful Ariane 2, 3, and 4 versions have already been approved and funded by ESA. Commercial success also is expected during the next several years as a result of several external factors: delays in the Shuttle development schedule, high cost of U.S. expendable vehicles such as Delta or Atlas-Centaur (resulting, in turn, from low production volume), and an insufficient number of Shuttle flights. A private corporation (Arianespace) has been established to finance and market Ariane through active salesmanship and promotion.

Spacelab was successfully launched aboard the Shuttle in November 1983. Slippages in the launch schedule, cost overruns, and technical interface problems—which each party tended to at-

Table C-1 .—ESA Science Budget

Member States	Percent contribution to ESA's science program
Belgium	4.49
Denmark	2.51
France	21.40
Federal Republic of Germany	25.57
Ireland	0.54
Italy	12.46
Netherlands	6.00
Spain	5.04
Sweden	4.25
Switzerland	3.99
United Kingdom	13.75

tribute to the other—have at times caused a certain amount of strain between NASA and ESA, but probably nothing **more than is to be expected in** such an ambitious cooperative effort.[20] The question **remains, however, of the scope which will be given to Spacelab's utilization, and of who is willing to pay for the exploitation of its capabilities. How this question is resolved will have an influence on European attitudes toward participation in a U.S. "space station" program.**

5. **Future Plans–These are still** in **the process of being drawn** up, but it is worthwhile to point out that ESA has allocated funds not only to evaluate those options which are natural follow-ons of present programs (like an advanced heavy version of Ariane beyond the planned version 4) but also to study explicitly the prospects of "transatlantic" cooperation. Within the next 2 years, ESA **must decide which of the major options identified by its long-term space transportation plan to follow: cooperation with the United States** in developing space infrastructure, and/or pursuing European-only development of modern capabilities for space operations. The timing of U.S. and ESA decisions on future programs is now compatible, but will not remain so indefinitely.

ESA also has an active program of basic research in materials processing, one of the most promising candidates for widescale applications aboard a "space station." This research program is carried out at present on a variety of vehicles, among which Spacelab is prominent. ESA's Council has already approved and funded the development of another in-space infrastructure element for this purpose; a space "platform," it is named EURECA (European Retrievable Carrier).

EURECA is designed to carry experiments that require longer times on orbit than are available on the Shuttle. **It** will include materials processing facilities (furnaces and the like), and will be launched and retrieved by the Shuttle. Its design will provide enough maneuvering and power supply capability to sustain a prolonged (i.e., 6 months) orbital life of its own. These features give to EURECA all the appearances of a "free-flyer" which could be tended by other, future infrastructure elements and actually make it look like a first step toward ESA participation in a "space station."

All of the above points clearly toward an ESA willingness to consider seriously the possibility of a European participation in a space infrastructure program. Past history, however, also points strongly toward a European tendency to balance its commitments carefully between the acquisition of autonomous capabilities (as exemplified by Ariane) and the involvement with U.S. projects (e.g., Spacelab).

To sum up, it appears that, notwithstanding its policy of retaining capabilities of its own, especially in those areas where commercial competition may take place, ESA is a likely candidate for a substantial cooperative effort with NASA because:

a. ESA and its individual member-states have a longstanding tradition of cooperation with NASA.
b. Although much smaller, total European space expenditures are commensurate with NASA's (about one fourth). Given that the consolidated gross national product (GNP) of ESA's member-states is somewhat larger than the GNP of the United States, there seems to be room for a substantial increase in these expenditures. However, present trends do not seem to point in that direction.
c. The ESA Executive (headquarters and technical centers) is driven by internal motivations which are somewhat similar to NASA's, and ESA is striving to define and get authorization for an ambitious long-range program which would give size, focus and purpose to its activity.
d. Most member-states of ESA are at least willing to take a look at a possible U.S. offer to cooperate on a "space station," and generally believe that the very scope of such a program makes it necessary to approach it jointly in order to achieve a meaningful level of participation.

In spite of what has just been said, some major member-states of the European Space Agency do not want at the present juncture to preclude bilateral cooperation with the United States (if they deem it worthwhile and no satisfactory joint European arrangement with the United States can be devised.) These countries appear at present to be France, the FRG, and Italy, which together account for over so percent of ESA's resources. In any case, even though these countries would be likely to end up participating in a U.S. space infrastructure program through ESA if such a program is instituted, they will assess their interests and decide upon their course irrespective of the joint European assessment, and it is therefore worthwhile to take a closer look at each one.

FRANCE

France has always aimed at being the "third space power" after the United States and the Soviet Union, and has indeed managed to build up the largest and

[20] Many modifications had to be made to Spacelab as a result of changes in the Shuttle interface. This situation was somewhat reminiscent of the operations of ELDO, for it arose, and inevitably so, from the parallel development of a system and one of its major subsystems.

most comprehensive space program in Europe and the third-largest in the world. Budgetary appropriations are an indication of this; in 1983 (approximate figures) France's space expenses will be ***$545*** million (as compared with the FRG's $325 million, or Japan's $450 million). French ambitions date back to the de Gaulle era, and it was as early as 1966 that France orbited its first satellite with a French-built rocket, a few days before its second satellite was launched by NASA. Since then, the French program has substantially shifted its emphasis away from national prestige towards economic competitiveness, especially for export purposes.

Therefore, while maintaining a fair-sized space science program, CNES (the French space agency) has been active mostly in launch vehicle development (Ariane, under ESA's supervision), communication satellites construction (participation in joint European programs; national TELECOM 1 satellites to be launched in 1984; a bilateral program with the FRG to launch direct TV broadcasting satellites in 1985), land remote-sensing systems (the first satellite of which, named SPOT 1, is to be launched in 1986 and will incorporate two high-resolution instruments and stereoscopic imaging capability), and a variety of other programs.

French industry, meanwhile, does not content itself with implementing national programs and its share of European ones, but also strives very hard to compete for space-related export sales. Ariane launch services have been sold to several organizations or countries–including private firms in the United States—and communications satellites to ARABSAT (a consortium of Arab countries).

CNES also runs a research program to evaluate materials processing applications, and has laid out plans and preliminary designs for a specialized automated "manufacturing-in-space system" named SOLARIS. This concept features a platform (without crew facilities) equipped with furnaces, adequate power supply, and other ancillary subsystems including a robot manipulator arm; a transfer and raw material supply stage to be launched by Ariane 4; and a ballistic reentry capsule to bring processed items back to Earth. An effort to promote interest in this concept among other ESA member-states has not met with success up to now, perhaps because it was felt to be premature.

In sum, France's space policy places a strong emphasis on "autonomy" (on a European level at least, if not in the strictly national sense). This is due in part to a frame of mind inherited from the de Gaulle era, but now even more so to economic considerations; commercial competition requires that a country be able to play its own hand independently. Furthermore, **France and the FRG are now discussing plans for a military reconnaissance satellite: this makes autonomy all the more important to French decision makers.**

Hence the staunch support (and high financial contribution) given to the Ariane program, and the carefully balanced bilateral cooperation with many different countries: the United States, the FRG, Sweden, and the U.S.S.R. particularly. In ESA's policymaking bodies, France has been and will probably remain in the future one of the staunchest advocates of the dual approach of balancing cooperation with the United States with an equally strong commitment to autonomous capabilities.

THE FEDERAL REPUBLIC OF GERMANY

Just like France and other members of ESA, the FRG conducts the largest share of its space efforts through that agency's joint programs. In particular, the FRG government strongly supported the Spacelab program at its inception in the early 1970s, and since then has provided more than 50 percent of its funding. The FRG also provides the largest single contribution to ESA's remote-sensing programs (METEOSAT, ERS), and land communications programs (OTS, ETS). More recently, when trying to shape ESA's future programs, the FRG has acted as a promoter of the EURECA project described earlier, while France was promoting Ariane **4.**

The FRG, however, is also engaged in a number of bilateral cooperative undertakings. Along with France, the FRG is developing TV-SAT, a direct television broadcasting satellite: experience thus gained will enable its electronics and aerospace firms to compete for export sales in what is expected to become one of the fastest growing markets, that of DBS (direct broadcasting satellites). Another important area of bilateral endeavor is space science, not only with the United States (several FRG scientific satellites have been launched by the United States), but also with France, Sweden, and the United Kingdom.

Strong emphasis on materials science and processing is a characteristic feature of the FRG's space program. This includes suborbital flights on sounding rockets, which provide a few minutes of "near zero gravity"; small payload packages to be carried by the Shuttle (referred to by NASA as "Getaway Specials") and of course utilization of Spacelab. The FRG has conducted major experiments on the first Spacelab mission in 1983 (which was a joint U.S.-European flight). **It** has also purchased and will manage a wholly FRG Spacelab mission called D-1, to be flown in October **1985.**

The FRG materials processing program is not purely scientific in orientation. It aims at involving the industrial sector early in exploring potential applications of

space-processed metals, composite metals, crystals, and chemicals. This close association of government support with industry's initiative seems to work well, **all the more so because the FRG's major aerospace and electronics firms play a much larger** role in initiating and funding research and development efforts than do their counterparts in other European countries.

Generally speaking, this fits in well with what appears to be the overall goal of the FRG's space policy: to encourage its national aerospace industry, to promote scientific and industrial/technological research, and to rely on ESA'S programs to stay in the applications business. The keyword seems to be "competition through technological capability" rather than "competition through nationally proven systems." (This latter could well be the French motto.)

All this supports the views expressed in many quarters that among ESA's member-states the FRG is the most "transatlantic-rein ded," and that its attitude towards cooperative ventures with the United States is likely to be more positive than that of the French. There is no doubt that in ESA's councils, and even more freely so when drafting its national program, the FRG would consider very seriously a possible invitation from the United States to participate in "space station" development. Also, the FRG has been less outspoken than France in its reactions to the frustrations which have resulted from some of the past U. S.-Europe joint ventures. But the frustrations were there all the same, and like most of its European partners, the FRG will weigh closely the pros and cons of the possible modes of cooperation.

ITALY

With a 1983 budget for space activities in the range of$150 million, of which slightly more than one-half makes up its contribution to ESA programs, Italy is clearly demonstrating a willingness to implement a space policy of its own. The framing of such a policy seems to be hindered by lack of central coordination among the several interested government agencies: Defense, Communications, and the National Research Council (CNR). The last, however, seems to be in the process of taking the lead.

In 1979, CNR managed to secure government approval **for an overall plan calling for a sharp increase in funding; this has been partly implemented. Most of the increase is to fund national programs, especially** in the field of communications satellites: a system named ITALSAT is being considered, as well as a direct broadcasting TV system. Meanwhile, Italy has strongly supported ESA's experimental L-SAT program and has taken a leading position in advanced communications technology (20-30 gigahertz) through the SIRIO-2 meteorological data dissemination satellite, which was destroyed in 1982 when the first Ariane operational flight failed to achieve orbit.

Besides its marked interest in communications-related space activities, Italy has undertaken several bilateral cooperative ventures with NASA, particularly in areas not covered by European programs. **In the past, these have included an imaginative concept called San Marco, involving several launchings of small scientific satellites by U.S.-made** SCOUT rockets from an off-shore platform located on the equator off the coast of Kenya. More recently, Italy started developing IRIS, a small booster stage for Shuttle payloads. Remote sensing is another theme for U.S.-Italian cooperation, if only because Italy runs the main European Landsat data receiving station located at Fucino near Rome.

The latest scheme considered for a joint U.S.-Italian venture is worth mentioning because of its obvious relation to in-space activities. It is the so called "tethered satellite" concept, in which a scientific satellite is to be attached by a long umbilical cord to the Shuttle or another infrastructure element in orbit. Italy now has a Memorandum of Understanding with NASA regarding this matter, and joint studies are under way to develop the concept, Perhaps because of this, Italy up to now has been one of the most eager of ESA's member-states to participate in informal discussions on U.S.-European cooperation in a "space station" development program.

THE UNITED KINGDOM

Although the United Kingdom initially showed little inclination to share in NASA's "space station" aspirations, this situation has changed over the past year, with U.K. interest coming to focus on platforms. Great Britain is, after France and the FRG, the third largest contributor to ESA's budget, but the lion's share of its attention over the past several years has been given to satellite communications, within ESA as well as nationally. As it happens, a "space station" has been thought, until recently, to be of relatively little value to satellite communications (except in the very long term). Britain's developing interest in long-term in-orbit infrastructure, coupled with its intention of maintaining its vigorous space science program (pursued both through ESA and bilaterally with NASA) and its rapidly growing interest in remote sensing, may signal a move toward a more comprehensive and diversified space program.

OTHER ESA MEMBER-STATES

This paper has dwelt at some length on those **members** of ESA which deem it preferable to participate directly, as well as through ESA, in talks with NASA on "space station" matters, This does by no means imply a lack of interest on other member countries' parts. However, it does make it more difficult to assess their positions with respect to possible U.S. overtures since those positions are not debated publicly.[21] One fact remains, however: all ESA's members have entrusted to the Agency a long-term program planning mandate, and have provided funds therefore. And this mandate explicitly encompasses consideration of "transatlantic" cooperation on a space station.

CANADA

There is a General Agreement on Cooperation between Canada and ESA, which makes Canadian participation in an ESA contribution to a space infrastructure program at least a possibility. Its longstanding tradition of bilateral cooperation with the United States, however, prompts Canada, through its National Research Council, to evaluate its interest in a "space station" independently.

Canada's expenditures in space in 1983 were about $100 million. Apart from a pioneering effort to operate domestic satellite communications systems (the ANIK **spacecraft family built by Hughes) and a number of joint scientific projects with the United States, Canada's major bilateral program with NASA is the development of the remote manipulator arm for the Shuttle. In return for a NASA commitment to purchase additional arms from Toronto-based Spar Aerospace Ltd., Canada has funded the $100 million development of the first flight unit, which** has been successfully tested on Shuttle flights. Manipulator systems could be important features of space infrastructure and thus are candidates for Canadian contribution.

JAPAN

With the exception of bilateral cooperation with the United States, Japan has, to date, carried the burden of its space activities alone.[22] Fairly constant in the last few years, Japan's space expenditures per annum amount to approximately $45O million, a budget nearly one half the size of the European Space Agency's.

Space development in Japan is executed **under the leadership of the Space Activities Commission (SAC), an advisory organ to the Prime Minister. The main executive agency is the National Space Development Agency (NASDA), established** in 1969 to undertake the development of applications satellites and related launch vehicles, and to conduct launching and tracking operations. Another agency, the Institute of Space **and Astronautical** Science (ISAS), is in charge of scientific space programs carried out on balloons, sounding rockets, and satellites. ISAS builds its own family of launch vehicles and runs its own launch center at Kagoshima, independently of NASDA's launch facilities which are located at Tanegashima.

Japan is the only country where large-scale space science and space applications programs are carried out by two completely separate entities, reporting to different departments of government; while ISAS is an "independent national institute" under the Ministry of Education, NASDA reports to the Prime Minister's Office through the Science and Technology Agency. But NASDA also carries out programs on behalf of, and draws funds from, other ministries: Transport (meteorology), Posts and Telecommunications,

From 1970 to **1981, Japan successfully launched 21 satellites, developed two families of launch** vehicles, undertook the development of several more satellites and of a third type of launcher, and readied a number of experiments to be carried by the Shuttle and Spacelab. For the time being, this effort has been directed exclusively towards meeting domestic needs (communications, remote sensing) and the **acquisition of technology and expertise through a wide range of scientific and experimental programs. Consequently, there has been, to date, little effort by Japan to compete with other space powers in offering commercial services abroad.** (An exception is the sale of ground stations for setting up communications networks or remote-sensing data reception; in these areas, Japanese industry has captured a good share of the world market.)

Until very recently, Japan has cooperated closely with NASA as well as with U.S. industry. **In the field of space science, there have been a number of scientific exchanges, and this** will continue as Japan plans to use flight opportunities on the Shuttle and Spacelab. Many of Japan's applications satellites, whether experimental or operational, have been developed within the framework of joint ventures among Japanese and U.S. companies. As far as launch vehicles are concerned, the "Mu" series of small launchers has been an indigenous development from the start, but the larger "N" family to be used to launch applications satellites has relied on technology transfers from the United States.

---

[21] The position of the smaller states in ESA is somewhat similar to that of those in the European Economic Community. At the Economic Summit, the big four European nations attend in their own right; the remaining six are represented by the President of the Commission.

[22] Japan may now be expanding its sphere of space cooperation. It has recently opened a liaison office in Paris, for example.

38-798 0 - 84 - 14: QL 3

The first stage of the "N1" version is in effect a Thor-Delta first stage built under license, and the third stage is a U.S. (Thiokol) production. The improved "N2" version goes even further in this direction, as it also includes a U.S. (Aerojet) second stage. All told, Japanese industry builds barely more than half of the "N2" vehicle. It should be pointed out that the U. S.-Japanese Agreement on Space Activities (signed in 1969) imposes restrictions on the use of these U.S. technologies and hardware by curbing transfer to third parties. The new launcher design, named Hi-A (roughly equivalent to ESA's Ariane 1) will alter this situation significantly, for the second stage (which will burn advanced liquid hydrogen/oxygen propellants) and the third stage, as well as the guidance system, will be of indigenous design and manufacture. When the H1 -A becomes operational, Japan will be only one step removed from an autonomous launch capability, namely the development of a new first stage (for which preliminary designs have already been proposed).

In addition to the obvious desire to increase Japanese industry's share of the construction of space hardware, this trend towards autonomy could be based on two grounds. First, there may be dissatisfaction with U.S.-supplied hardware; indeed, in 1979 and 1980 two costly launch failures were traced to probable malfunction of U.S.-supplied subsystems, and in the aftermath of these events it was decided to accelerate indigenous development.[23] Second, an autonomous launch capability clearly would enable Japan to offer full-scale commercial services in space applacations.[24]

Another aspect of Japan's space policy is that little has been done to diversify its sources for technology procurement and partnerships beyond the United States. Regular consultations are held, for instance, with ESA, but amount to little beyond some coordination or satellite tracking stations. France was approached in the early 1970s and at several points later on for possible cooperation on liquid hydrogen-fueled rocket engines, but to no avail; the parties did not reach even a conceptual definition of a cooperative venture.

In May 1984, Japan announced a plan for its participation in the U.S. "space station" program. The plan calls for Japan's development of an experimental module to carry out life science and materials science experiments, to be performed by one Japanese worker. The module will be connected with the U.S. infrastructure. It will include a manipulator arm, experimental devices for studies related to pharmaceuticals, crystals, compound materials, and a self-sufficiency food system. The development expenses to be paid by Japan are estimated to be 200-300 billion yen [$0.9-1.4 billion (1984)].

DEVELOPING COUNTRIES

Some developing countries can operate in space on their own, as is exemplified by India and the People's Republic of China. Both countries have launched several satellites using indigenous launchers. Both countries are engaged in efforts to use existing systems to acquire expertise in important applications areas like meteorology, remote sensing, communications, and educational broadcasting. Details of programs and technology are not always very well known outside of these countries; most Western observers who have visited space facilities in India and China have been impressed by their potential, if not always by their present condition. **In both countries, an adequate substratum** of **advanced industries is missing—especially** in the areas of electronic components, high-grade materials, and chemicals—and strains are caused by conflicting priorities and by lack of foreign exchange. Shortages of trained technicians add further difficulties, but the foundation has been laid for further activities in space.

Other developing countries are striving to reach the stage already attained by China and India. A few years ago, it seemed that Brazil was on the verge of getting a comprehensive program started, including its own satellites and launchers, developed in part indigenously and in part with foreign help. (France and the FRG had actually almost concluded agreements with Brazil to that effect.) Political developments, growing economic difficulties, and diplomatic pressures from some countries that were, perhaps, wary of Brazil's access to missile technology have lowered these prospects considerably. Although Brazil has not managed to become a builder of space systems, it is an active user of existing systems (INTELSAT for communications, LANDSAT for remote sensing), and still plans to operate a satellite communications system of its own, which would be procured abroad.

Utilization of space technology, in contrast to its development, is almost worldwide. In particular, more than 100 participating countries are members in

[23] The Japanese reaction to the recent failure of transponders on their direct broadcast satellite suggests that the drive toward self-sufficiency will probably be further intensified.

[24] It has been pointed out that Japan's launch capabilities are severely limited by agreements with the fishing industry, whereby the Tanegashima launch center can be used only four months per year. But this restriction clearly would not be sufficient to deter Japan from its traditional policy of entering the world market after a technology has been mastered and tried out on domestic markets.

INTELSAT, and each of them operates at least one ground station. In addition, there are more than half a dozen LANDSAT and/or SPOT remote-sensing data reception stations i n existence or u rider construction throughout the so-called Third World .25

Are there potential partners in a joint "space station" venture to be found among these countries, especially among those which have some sort of aerospace industry of their own? There is no basic reason why the answer should be no, but it must be pointed out that:

- to some of these countries, cooperation with the United States would pose a tricky, if not insurmountable, political challenge, unless the mode of cooperation approached a "genuinely international" one;
- financial participation of these countries could probably not exceed a very small percentage of the total cost; and
- such a program exceeds by far the ambitions that these countries set at present for their endeavors in space, and going along with it in an international context would not satisfy the fundamental craving for autonomy and self-assertion which often, to some extent, underlies their space policies.

Concerning the second point, it might be argued that a large number of small percentages can amount to a sizable sum. To give one example: 82 out of 102 signatures of INTELSAT own each less than 1 percent of the shares, but their combined participation amounts to more than 20 percent. As to the third point, a genuinely international structure could be acceptable to countries who see space activities as a means of self-assertion; for, even if the system were built and operated by industrialized countries, it would at least be jointly owned/managed by all. These considerations all point to the same conclusions: a significant level of participation by developing countries is unlikely to occur, except possibly within some broad international framework and unless aggressively pursued by the United States.

THE SOVIET UNION

Under present and foreseeable political circumstances, the Soviet Union would be unlikely to participate in in a space venture initiated and led by the United States. Even the prospects of its participating in a genuinely international system seem very remote. One need only remember that the Soviet Union, and the other Eastern-bloc countries, have never joined the INTELSAT organization. These countries decided instead to create their own international satellite communications system, named INTERSPUTNIK; since the two systems have to be linked somehow, there are INTELSAT ground stations in the U. S. S. R., Cuba, and Romania, but these countries are users of and not parties to INTELSAT. **It** is true that the Soviet Union is party to several international satellite systems, notably INMARSAT (which is, roughly speaking, to maritime communications, what INTELSAT is to ground communications) and SARSAT-CORPAS (an experimental satellite assisted search and rescue system). But these were created in a context where the United States did not play a dominant role.

However, it is not possible to discuss international prospects for international involvement in a "space station" without mentioning the Soviet Union, for that country does operate its own in-space infrastructure: Sal yut-Soyuz-Progress .[26] Furthermore, the Soviet Union has provided opportunities to several other countries to have one or more of their citizens visit this infrastructure.

The Soviets have never concealed their ultimate intention to have some of their people in space operating permanent facilities there, and Salyut is clearly a major step towards that goal. The pace of its future evolution is, however, open to conjecture. The Salyut-Soyuz-Progress infrastructure, as developed to date, does not exhibit all the features to which NASA aspires for U.S. in-space infrastructure.

For instance, the Salyut's crew can perform work only inside the station, or, when spacewalking, only very close to it, by remaining tethered. The Soviets apparently have no such thing as manned maneuvering units, teleoperated maneuvering systems, and the like. As a result, the crew cannot tend other spacecraft which might co-orbit or rendezvous with their complex, in order to maintain, service, or repair them. This reflects adversely on all material processing research: Salyut, because of perturbations caused by

[25] Each of thes, stations usually serves several countries.

[26] The name SALYUT designates a series of manned orbital laboratories, launched and operated one at a time since 1971. The system presently active, SALYUT 7, is likely to stay several years in orbit, as did its predecessor SALYUT 6, both because of design improvements and because a fair amount of in-orbit maintenance can now be carried out by visiting crews. The spacecraft, weighing about 40,000 lbs, is launched unmanned, and later on rendezvous with SOYUZ capsules carrying a crew of 2 or 3. SALYUT 6 and 7 have also been visited by larger (30,000 lbs) unmanned craft. The usual pattern of activity is to send abroad first a "semi-permanent" crew of two for a duration now exceeding 6 months. While this crew stays on board, visiting crews of three join them (usually for a week). These visits alternate with unmanned resupply trips by PROGRESS. To date, the station has been left unoccupied for some time after the semipermanent crew has accomplished its long-duration stay, after which the cycle starts again. For a more complete discussion, see the OTA Technical Memorandum *Salyut: Soviet* Steps *Toward Permanent Human Presence* in Space, December 1982.

crew members' movements and the lack of a free-flying platform in its vicinity, does not provide the very low level of residual "gravity" necessary for the implementation of finely tuned experiments.

In spite of this, and other present limitations, the Salyut has been used extensively for military and civilian activities. In the latter case, where some results are known, cosmonauts have performed useful work in life sciences, Earth observation, astronomy, materials processing, and technology development. Furthermore, Salyut has enabled the Soviet Union to gain the prestige associated with having some of its people in orbit.

Cooperation with the Soviet Union in space is a complex matter.[27] Planning is difficult when future plans are, by definition, to be kept secret. Communication with authoritative Soviet representatives tends to be scant, slow, and often "beside the point." Standards, methods and even terminology are very different from those in use outside the Soviet Union. Consequently, project managers and teams from these countries who have been involved in bilateral programs with the U.S.S.R. have usually experienced great difficulties in keeping cost and schedule under control. However, Soviet teams have proven their ability to be flexible and imaginative when they feel the need for it. For example, West German scientists whose instruments are to be flown on the upcoming Soviet VEGA mission to Halley's Comet have found the cooperative arrangements quite satisfactory.

Whatever the difficulties inherent in international cooperation with the U.S.S.R. in space activities, there are countries which have no other choice, and there are countries which find advantage in balancing cooperation with the United States with joint ventures with the Soviet Union. It seems unlikely, however, that these latter countries would go so far as to bypass cooperation with the United States on a "space station" by exclusive recourse to analogous Soviet flight opportunities.

Factors Influencing Assessment of International Involvement in U.S. "Space Station" Program

PAST EXPERIENCE

Both the United States and its potential partners will have a substantial historical record in mind when it comes time to decide whether, and how, to proceed in a cooperative "space station" endeavor.

The debate over European participation in NASA's post-Apollo program is by far the most important past experience, since it was the only time that the United States invited its major allies–Europe, Canada, Australia, and Japan—to participate in an effort which was at the core of NASA's plans for the future. While there had been significant scientific cooperation prior to 1969, particularly with Europe, there was a deliberate decision as NASA's post-Apollo efforts were being planned in 1969 and 1970 to make international involvement in those efforts, particularly of U.S. allies, a major theme.

Armed with what he thought was a mandate from President Richard Nixon to seek such involvement, NASA Administrator Thomas Paine toured Europe and the Far East inviting other countries to consider substantial involvement in the emerging U.S. post-Apollo plans, which at the time included a "space station," Shuttle, reusable orbital transfer vehicle ("space tug"), and, ultimately, having people visit Mars. European nations, through ELDO and ESRO, were particularly responsive to Paine's initiative, and began to study in some detail various forms of participation; neither Japan nor Australia made an active response to the U.S. initiative.

A primary NASA objective in initiating the post-Apollo dialogue was "to stimulate Europeans to rethink their present limited space objectives, to help them avoid wasting resources on obsolescent developments, and eventually to establish more considerable prospects for future international collaboration on major space projects. "[28] In particular, NASA was eager to steer Europe away from developing an autonomous launch capability. Plans for an expendable European launcher were the "obsolescent developments" to which Paine was referring.

At the time NASA was offering to involve other countries in an ambitious post-Apollo enterprise; it did not have White House or congressional approval for the programs it was promoting overseas. Indeed, one tactic NASA may have been using to gain program approval at home was to point out the problems involved in withdrawing from incipient agreements with Europe to cooperate in those programs. Potential U.S. partners were aware of the NASA approach; in September 1970, for example, "American space officials were asked for assurance that, if West European nations scrapped their space programs in favor of a joint effort with the United States, the latter would not, in an economy move, back down. "[29]

[27] U.S./U.S.S.R. cooperation in space will be examined by OTA in detail in a technical memorandum to be published late in 1984.

[28] Letter from Thomas Paine, NASA Administrator, to the President, Nov. 7, 1969.

[29] *New York Times,* Sept. 24, 1970, P. 64.

By 1971, **only the Shuttle and orbital transfer** vehicle remained as part of NASA's post-Apollo plans; the "space station" had been shelved for the indefinite future. NASA **was suggesting to Europe that its participation involve developing some portion of the airframe of the Shuttle orbiter and total responsibility** for developing the space tug. However, others within the Executive Branch were skeptical that Europe had the technical capability to develop the tug on its own, and were concerned that the United States might, in the **process of assisting Europe** in the tug development, transfer sensitive and/or economically valuable U.S. technology.

Throughout 1970 and 1971, negotiations on European involvement in post-Apollo development efforts were linked to a European request for U.S. assurance that it would launch European communication satellites. The United States had for some time resisted providing such assurances on terms acceptable to Europe because of its own economic interests, both INTELSAT and in U.S. industry's domination of the market for communications satellites, but i n September 1971 a compromise on the issue acceptable to both sides was reached and this obstacle to the post-Apollo negotiations was removed.

President Nixon approved development of the Shuttle on January 5, 1972. Shortly afterwards, a joint NASA/European "experts group" met and reported that "NASA . . . continued to encourage European participation in development and use of the post-Apollo program. . . . NASA's expectation [was] that European participation in development of the Shuttle would be within the context of a broader program which included multilateral European responsibility for development of a major element such as reusable space tugs . . , or Shuttle-borne orbital laboratories . . , ."[30]

The suggestion that there was an alternative to European development of the space tug had emerged within the United States during 1971; the so-called "sortie can" laboratory (also called a research and applications module) was seen as clearly within European capabilities, offering no risks of unwanted technology transfer, having no military implications, and providing clean technical and managerial interfaces with development of the Shuttle orbiter itself. On the other hand, two factors militated against Europe's developing the tug: 1) recognition that the Shuttle and its associated orbital transfer vehicle would be used by the United States for military, as well as civilian, purposes, and 2) NASA's concern over housing the tug, with its planned cryogenic fuel, in the Shuttle payload bay.

In June 1972, the United States withdrew (without warning) the option of Europe's participation being development of the tug, and told Europe that the only choice left for substantial participation was development of the sortie laboratory. Europe was also excluded from direct involvement in developing any element of the Shuttle orbiter itself. This decision came as a blow to Europe, which had already spent substantial sums both on tug development and, particularly in the United Kingdom and Italy, on orbiter design work in collaboration with U.S. industry. **In terms of stimulus to European technical and industrial capability and eventual sales potential, Europe viewed the sortie laboratory as a distinctly less desirable option.**

Nevertheless, Europe (and in particular the FRG) found the opportunity to become involved with the U.S. mainstream program for the 1970s attractive enough that it continued negotiations in a situation where the United States was clearly playing a dominant role. After a further year of negotiations, in mid-1973 Europe agreed to proceed with development of the sortie laboratory (by now named Spacelab) as part of a "package deal" which also included development of a French launcher (which became the Ariane project) and of an experimental maritime communications satellite and which called for the creation of a single European Space Agency to carry out these projects. It was the difference in cost between the expensive tug development program and the less expensive (at the time) Spacelab program which freed up the funding needed to initiate joint European support of Ariane.

The Memorandum of Understanding which governed NASA/European cooperation on Spacelab was signed in September 1973.[31] At the time of the U. S.-European agreement on Spacelab development, it was anticipated that the facility would be used extensively in conjunction with the Shuttle and that the United States would buy several Spacelabs beyond the one engineering model and one flight model which Europe agreed to develop and build at its own cost and then to deliver to NASA. This has not yet happened.

[30] JONASA Press Release, Feb. 11,1972.

[31] *The* MOU between NASA and ESA was a subordinate document which drew its authority from the Intergovernmental Agreement between the United States on the one hand and each of the individual governments of the ESRO Member States on the other. This Agreement was thus binding on the whole of the U.S. Government not just on NASA. Although ratified by the parliaments of several ESRO countries, it was not submitted to the U.S. Senate for ratification. As a consequence, its status was that of an "International Executive Agreement" and, as such, subordinate to U.S. domestic law. This point, which the ESRO states did not appreciate at the time, became important in 1979 in connection with a U.S. Air Force plan (later cancelled) to develop a system similar to Spacelab.

The costs of both Shuttle and Spacelab utilization have escalated to the point where extensive utilization of the full Spacelab capabilities is questionable, and the United States has bought only the minimum single additional Spacelab to which it was committed.

The Europeans knew that, under the circumstances, they would have to accept the status of a junior partner. Now that they have demonstrated their competence, they will look to agreements on a much more equitable basis as Europe considers cooperation with the United States in "space station" development. For example, the current head of CNES has questioned whether Spacelab has "fulfilled German expectations" (the FRG was the major European advocate of the program) and has suggested that "there is some question as to whether Spacelab . . . is really appreciated by the U.S. . . . **In any event, Europe does not really feel at** home in Spacelab, whose operation is now out of European hands."[32]

European acceptance of what some now perceive to be unfavorable terms in the Spacelab agreement stemmed in large part from lack of confidence in European capabilities and from a belief that only through cooperation with the United States could those capabilities be improved. Now, having brought both Spacelab and Ariane to success, Europe has much more confidence in its ability to chart its own future in space and it is likely to be a more demanding participant in negotiations with the United States over cooperative ventures.

European confidence in the United States as a cooperative partner was shaken in the spring of 1981 when the United States announced, without prior consultation with its European partners, that it was canceling a U.S. spacecraft which was part of a two-spacecraft International Solar Polar Mission (ISPM).[33] This withdrawal caused vigorous protests from not only European space officials but also representatives of foreign ministries.[34] There is general agreement that the ISPM affair was not handled well by the United States.[35] Although both the United States and Europe have managed to put ISPM in perspective, European officials are not beyond using U.S. remorse over the incident as a bargaining chip in U.S.-European negotiations on future collaboration. For a time, though, it seemed as if "aberrations such as the unilateral pullout by the United States" from the ISPM could "set back progress for years."[36] It is perhaps an indication of the basically favorable climate for U.S.-European collaboration in space activities that the ISPM incident and the Spacelab experience are viewed as lessons of what is to be avoided in future negotiations rather than reasons for not cooperating in the future.

NATIONAL SECURITY INTERESTS

Military and national intelligence space activities provide the United States and its allies with major national security advantages, and all indications point towards reliance on them in the future. A major program like the "space station" is therefore bound to have national security implications. If a decision is made to develop a single set of infrastructure elements to satisfy all interests, civilian **and** military, then the prospect of international involvement in such a program raises critical questions. This is all the more true since new security implications may emerge as the program matures. If the future unveils unforeseen potentialities, international participation in the program may inhibit, perhaps even prevent. the United States from taking full advantage of them.

To an extent, major international involvement will obviously restrict U.S. freedom of choice in the future: it would be more difficult, for instance, for the United States to preserve the option of integrating all its efforts in space (military as well as civilian) and having a single Government agency responsible for them (though the U.S. Army and its Corps of Engineers may exemplify a possible approach). Such a drastic step has been debated and rejected in the past, but, in principle, it remains an option which international participation might foreclose. Conversely, any form **of** U.S. military activity would raise major problems for ESA as a partner, since the ESA charter precludes any involvement in military projects.[37]

A more likely future, however, is that any national security uses would rely on elements operationally separate from the civilian one, but built with similar or identical technology and perhaps making joint use of basic utilities. Dependence of any military segment(s) on parts and/or subsystems procured from foreign sources could ensue, This is a situation which will

---

[32] Herbert Curien, "The Pride of France: a National Commitment, " *Spectrum*, September 1983, p. 75.

[33] Indeed, European confidence had been shaken earlier when the United States cancel led its share in the AEROSAT program, In this instance, the U.S. withdrawal was total, and the program was stopped.

[34] For a running account of the International Solar Polar Mission controversy, see articles in *Aviation Week and Space Technology,* Mar, 2, Mar. 30, Aug. 3, Sept. 28, and Dec. 28, 1981.

[35] It is perhaps worth noting that the situation was aggravated because NASA was not permitted to consult or even warn ESA of the impending cancellation until the President's budget had been delivered to the Congress.

[36] Noel Hinners, "Space Science and Humanistic Concerns," in Jerry Grey and Lawrence Levy, eds., *Global Implications of Space Activities* (American Institute of Aeronautics and Astronautics, 1982), p. 43.

[37] Three of ESA's members (Sweden, Switzerland, and Ireland) are neutral countries.

never please the military (which, like France, prefers "autonomy"), but which can probably be met with adequate licensing arrangements (e.g., those under which the AV-8 Harrier aircraft was produced). For instance, if the U.S. military were to envision using elements of any civilian space infrastructure under such circumstances, a foreign supplier could be required to entrust a U.S. official agency with all drawings and documents needed to transfer the manufacturing of the item under consideration to a U.S. supplier if such a course eventually proved to be necessary. An intergovernmental arrangement would specify those situations where the U.S. agency is authorized to implement the transfer to a national supplier, so as to protect the foreign firm's commercial interests in all other cases.

Such a device works best when the back-up supplier in the U.S. is pre-identified, so that a minimum amount of transfer of know-how, consistent with the preservation of the foreign source's interests, can be carried out in advance, thus shortening the inevitable lead time inherent in a manufacturing restart. Of course, there is always the possibility that the U.S. military could procure systems directly from non-U. S. suppliers; this has happened for a few military systems in the past.

Another security-related consequence of international participation could be that foreign participants would be exposed to the operating characteristics of the technology used by U.S. national security agencies. This could involve those parts or subsystems provided by foreign sources, and can be assessed only on a case-by-case basis. But the matter could extend beyond foreign-supplied hardware, since foreign participants will of necessity have access to a certain level of technological detail, especially those interfacing with what they supply. This, however, is not necessarily critical: in a similar instance, the Shuttle, although it can be used to carry on U.S. national security activities, is itself not a classified item. However, many aspects of Shuttle operations, such as access to the Orbiter itself, are carried out under strict security, and the military has developed separate control facilities for its use of the Shuttle.

Similarly, as the presumed leader in a space infrastructure program, the United States is bound to be i n a dominant position regarding transfer of sensitive technology and industrial information. As was the case with Spacelab, all data and drawings pertaining to any foreign contribution would have to be made available to the United States in order to allow operation, maintenance, and repairs to be carried out. The United States, on the other hand, would have to provide only essential interface data to its partners. Such considerations, therefore, should not discourage the United States from seeking foreign participation, if it so desires.

Perhaps more important to national security considerations are the restrictions which might be imposed on certain national security uses of internationally developed infrastructure. While some, perhaps many, potential international partners might not oppose so-called "peaceful" military applications (e.g., military R&D, or activities in support areas such as communications, navigation, surveillance), some of them are unlikely to agree to the installation of any "battle station" on an element derived from a development program to which they are party. There is clearly no way to bypass such an issue: it would of necessity have to be settled beforehand, as explicitly as possible, in the agreement instituting the international program.

A last issue relating to national security considerations is that of the transfer of technology from the United States to foreign participants, or vice versa. There are generally two ways in which such technology transfers occur: "

1. In the course of an international development program, a certain amount of know-how is inevitably transferred among the parties to the project. This is more in the nature of general knowledge (management, organizational methodology and procedures) than of specific technological skills. The character of technical interaction between NASA and ESA in conjunction with Spacelab, even though it includes some technical assistance provided by NASA, is evidence of this.
2. If a foreign participant in charge of a given subsystem were to appear unable; at a late stage of the program, to produce a product conforming to required performance standards, it then would become necessary to assist the concerned party in meeting the specifications, a process which might involve the transfer of valuable and sensitive know-how. This can only be assessed on a case-by-case basis, but a number of safeguards can be built into the program at the start. These would include careful selection of subsystems entrusted to foreign participants and provision for midcourse assessment of performance. Of course, the reverse possibility now exists as well: that the United States could gain access to valuable technological know-how from other countries.

POTENTIAL PRIVATE-SECTOR INVOLVEMENT

In principle, private business and international cooperation are perfectly compatible; successful

"multinationals" are proof of this. It is true that until recently there were no multinational firms involved in space developments (unless INTELSAT is seen as a business). Actually, space activities in practically all countries constitute an area where governmental setting of policy, financing, and implementation of programs are the rule, although the private sector can be expected to play an increasingly important role in future space activities.

There is a clear trend towards increased private-sector involvement in those applications of space expected to generate profit, and the matter of "space commercialization" is now being actively debated in the United States. **In Europe, precedents** have been set with firms like ARIANESPACE (for the sale of launch services) and SPOT-IMAGE (for the commercial exploitation of the French SPOT Earth-resources-sensing satellite). **In Japan, space programs rely on close government-industry interaction.**

Hence, if it appears that activities conducted using space infrastructure can be economically profitable, the fact that it was developed internationally should not present an insurmountable obstacle to private-sector involvement in its use. However, all other things being equal, it is likely that U.S. industry would prefer to deal with infrastructure owned and operated by U.S. interests, Government or private.

THE ECONOMICS OF COMMERCIAL APPLICATIONS

The greater the prospects of commercial use of space infrastructure, the better the prospects for returns from investments made to develop it. The economic prospects can only gain from its large and wide-encompassing utilization. Such utilization, including foreign users, may exist even if the United States develops all or nearly all of the infrastructure. Many foreign customers would be attracted to any opportunities provided by its use. The extent of commercialization would then depend mainly on the conditions set by the owner(s) and operator(s): first and foremost, pricing policy, but also any commercial restrictions (e.g., will the infrastructure be made available to foreign firms competing directly with U.S. firms in a given field of application?) and technical factors (e.g., such stringent safety requirements that disclosure of proprietary knowledge would have to be made by the user). However, NASA's experience with accommodating commercial interests (including R&D efforts) on the Shuttle, through such mechanisms as Joint Endeavor Agreements and trips purchased in whole or in part by commercial interests under proprietary conditions, provides precedents which suggest that even U.S.-only elements could accommodate non-U.S. commercial users successfully.

It appears likely that international involvement in space infrastructure development, operation, and ownership would enhance the prospects for an economically efficient and broadly based utilization program. Common interest in its future capabilities and use will stimulate creativity and innovation among a much wider international community of potential users, including non-profit-seeking ones (governmental agencies, research institutions and the like). Also, any competition from the Soviet Union will be lessened if spacefaring countries feel secure in their participation in a U.S./international complex.

THE TECHNICAL ADEQUACY OF POTENTIAL FOREIGN CONTRIBUTIONS

What components of space infrastructure would each of the potential partners reviewed earlier be most likely to contribute by virtue of the current tendencies of its own programs, of the existence of technological domains where its industry is known to excel, or of other factors? Answers to this question are important. For if any foreign partners enter such a cooperative effort, the United States must ensure that their technical contributions are feasible, compatible, and complementary. Or, from another perspective: to what extent would the desired infrastructure have to be modified in order to accommodate contributions by a given set of participants?

It is impossible now to suggest more than a few generalities, inasmuch as NASA has not yet specified what the overall performance specifications are going to be.

Too, the level of technical sophistication for a given subsystem cannot yet be articulated. As just one example, consider electric power conditioning and distribution. On all spacecraft developed until now, electric power is distributed at low voltage, and all spacefaring countries possess the relevant technology. Many experts, however, judge that, for long-term in-space infrastructure, this technology should be supplanted by an alternative, high-voltage technology. In anticipation of just such a development, ESA and NASA have been discussing for some time the generation of a set of standards to be employed in spacecraft high-voltage power systems; but the matter is still outstanding,

Lastly, potential participants may wish to make their contribution, not in the areas where their industry is best endowed with existing capabilities, but rather in areas where they want it to acquire new capabilities. Nothing should prevent them from doing so if they are ready to commit themselves to meet the costs of such new and (to them) risky developments. This matter could become "sticky," however, if they were to wish to make a "key" contribution in such an area,

Thus, no useful projection of task allocation can be made now. Perhaps the division of work will have to be negotiated on a case-by-case basis, before the program actually starts, but after its shape and definition have been outlined in **more detail. Some countries are already suggesting ways in which they might prefer to contribute, and it would be wise for the United States to give careful consideration to including prospective partners in the infrastructure design phase in some sensible fashion.**

Assessment: Pros and Cons of International Involvement

A "U.S. ONLY" PROGRAM

At first glance, since almost certainly the United States is likely to bear the largest part of the financial burden of a "space station" development program, and since international cooperation is fraught with many well-known difficulties, it would seem that there would be much merit in the prospect of an independent, strictly U. S., undertaking. In addition, many of the reasons which have led the United States to consider a "space station" program in the first place—national pride and a sense of accomplishment, national prestige, national security, or supporting U.S. firms in commercial space activities—might best be served by a program carried out under exclusive U.S. control.

Similarly, it could be argued that potential international partners might find it to their advantage to be left to their own devices in planning and implementing their respective space programs, rather than having to weigh the pros and cons of associating themselves with what will in essence be an American program, unlikely to be perfectly suited to their goals and/or technical and financial resources and likely to limit their ability to pursue independent actions.

The arguments in favor of a strictly national U.S. program can be summarized as follows:

1, There is no substantial reason why the United States would not be able to go it alone: the country has all the technical and industrial resources necessary.
2. Generating and maintaining international interest in a "space station" program and enlisting participants is in itself a difficult process, leading to many concessions on the part of the United States and other participating countries, the return from which could be rather disappointing. Participation of Europe in major U.S. space undertakings, such as the Space Transportation System or the Space Telescope, seems always to stay in the 10 to 15 percent range, which is consistent with European space budgets. Even if one other major partner, say Japan, joins the "space station" program at a similar level, this still leaves the U.S. to bear 60 to 70 percent of the expense.
3. International cooperative programs, especially where advanced technology is concerned, have the reputation of being beleaguered by complex diplomatic and managerial interfaces, as well as by difficult compromises needed to tailor the overall undertaking to each participant's particular requirements.
4. Past experience points to the fact that the U.S. civilian space pro-gram is difficult enough to coordinate with the U.S. national security program on a purely national basis. This could be even more difficult in the case of an international "space station" program.

These considerations must however be carefully weighed against a number of arguments in favor of international involvement:

As stated repeatedly, international cooperation is a long-standing tradition in civilian space programs, and pursuing it has had a very positive political impact. Traditional partners of the United States in the industrialized world consistently list cooperation with this country among the objectives of their space policy statements; for example, the head of the French space program, who also chairs the ESA Council and the European Science Foundation, has recently noted that "cooperation with the United States is of fundamental importance. "[38] The United States has given a strong impression already that it anticipates significant international utilization of a "space station" and that, in order to assure such utilization, it will be receptive to foreign participation i n the development phase of the program. A decision to forego such participation would certainly have major (though probably not yet **very** major) political costs.

2. As discussed earlier, if the United States chooses to go ahead alone with its space infrastructure acquisition program, several countries or groups of countries among the industrialized Western-type democracies are likely to follow suit, even if on a smaller scale and after some time. Such duplication of efforts might well result in a net loss to the Western world. The very cost of these investments is bound to generate an extremely harsh level of competition for their commercial utilization, to the point where it may not be economically sound any more and the benefits of space

[38] Curien, *op. cit.*, p. 76

commercialization could be lost or significantly delayed.

3. Even if the prospects that Europe and Japan may associate in a joint "space station" program without the United States seem remote, there is no doubt that this possibility becomes more likely if the United States chooses to go it alone. As argued earlier, there are virtually no circumstances in which Europe or Japan would refuse a U.S. offer of involvement in the "space station, " and thus it is up to the United States to decide whether to make that offer.

As argued earlier and briefly again above, a likely impact of U.S. decision to proceed alone would be the eventual development by other space-oriented countries of capabilities which will be, at least in part, similar to those offered by a U.S. "space station." This could result in increased downstream economic competition between the United States and other industrial countries in commercial exploitation of space. By involving potential competitors in the U.S. 'program, this situation might be avoided or minimized. There is a certain parallel with the situation regarding European involvement in U.S. post-Apollo activities. By **withdrawing the offer of European development of a space tug (with an estimated cost to Europe of $500 million—$1 billion) and substituting the Spacelab (then estimated to cost $100 million-$200 million), the United States made possible a European financial commitment to develop its own launcher, which is now competing with the Shuttle for launch contracts. The United States** needs to evaluate carefully whether it wants to create a similar situation as its "space station" program begins.

As mentioned earlier in this paper, from the U.S. perspective international involvement is an option, not a requirement. However, not only are there strong reasons for the United States to pursue this option, but, at least from NASA's perspective, internationalizing the "space station" program to some meaningful degree eventually may bean important means of gathering political support in this country for the size and kind of program that it wishes to have. If the nationalistic objectives which might be served by NASA's present "space station" program aspirations are not sufficient to gain White House and congressional support of a "go it alone" approach, then an approach mixing nationalistic and cooperative elements seems essential to mobilize political support for it.

AN INTERNATIONAL PROGRAM

This approach to space infrastructure development, operation, and use would be preferred by the United States and/or other space-capable countries only if it was the best available means of maximizing all of the national objectives which have led to beginning the program in the first place. As mentioned earlier, the INTELSAT and INMARSAT analogy is rather misleading here. The objectives of those systems are inherently international in character and could not be successfully pursued without broad international participation, while space infrastructure can be developed and operated as a purely national enterprise.

Even the parallel to ESA is somewhat artificial: European countries created ESA because such a joint endeavor was the only way that they could marshal the resources required to carry out a comprehensive space program, albeit on a regional rather than a national basis. The United States, should it chose to do so, has the resources required for unilateral "space station" development.

A decision to create an international acquisition arrangement is highly unlikely, given the specific character of the support mobilized behind the "space station" concept in the United States, Europe and Japan to date. One fundamental motivation which could lead to such a decision–that it was the only way to mobilize the needed financial or technical resources—is missing, and there seems to be no other compelling reason, from a U.S. perspective, to pursue this option. Only if it were seen by the United States and, to a lesser degree, other spacefaring states as a particularly attractive way of symbolizing their commitment to broadly based international cooperation would a "fully international" option be preferred; no such vision has been persuasively advanced.

Making international operational arrangements once the infrastructure is acquired appears a somewhat more realistic prospect, though still unlikely to be preferred by its developers. The United States (and its partners) could recoup at least some costs of the acquisition by selling shares in it, and this form of broadened international involvement may be an attractive way of giving newly industrializing and developing countries a useful sense of involvement on the space frontier. Broader international involvement could also be accomplished by internationalizing (to some extent) the operating crew—or by leasing facilities to the rest of the world.

A U.S. PROGRAM WITH INTERNATIONAL INVOLVEMENT

Since the United States has given strong indication that it will open its space infrastructure program to foreign participation, it is useful to estimate what form of involvement is most likely to be successful, where success is defined as a mixture of costs and benefits

which is acceptable to all involved. Reaching an agreement is likely **to** involve difficult bargaining and significant compromise **at** the political, managerial, and technical levels. This process is already beginning, and both the United States and its potential partners (particularly Europe) **are** approaching the issue in **a** rather different manner than was the case during the 1969-73 negotiations over post-Apollo participation.

Those objectives which are likely to be of most interest to the United States perhaps would be best served by a cooperative approach which would commit the United States and its partners to share important parts of the overall acquisition program, to remain involved beyond its acquisition (i. e., during its operational phase as well), and to seek broadly based infrastructure utilization once established: that is, overall **joint acquisition, operation, and use. Certainly the United States would prefer to be the world leader in space development and use over the next few decades. A U.S.-led, freely arrived at, major in-space infrastructure collaboration program–one involving many, perhaps all, countries, especially the major spacefaring ones—would go a long way toward achieving this goal.**

But it seems as if the objectives, primarily utilitarian, which would motivate other countries to join in such a U.S. program **would be best served** if they could do so with minimal loss of their future freedom of action—i.e., participation in the acquisition, including development, phase only, with no a priori commitment to system utilization or to sharing in overall system management.

Potential U.S. partners are, of course, fully aware that a U.S. offer to share in the acquisition of in-space infrastructure is fundamentally political in character, and that decisions on issues such as cost-sharing and division of labor are as much political as technical or economic. However, as the earlier review of the space programs of potential partners has suggested, Europe (both ESA and individual countries) Canada and Japan **will bring some very real assets to the negotiating process.** The outcome of that process is certainly not going to reflect U.S. interests alone. Indeed, Europe, Canada and Japan may consider their participation in the operation of the infrastructure and their guaranteed access to it as preconditions to their contributing to its development.

SYNOPSIS OF THE OTA WORKSHOP ON COST CONTAINMENT OF CIVILIAN SPACE INFRASTRUCTURE (CIVILIAN "SPACE STATION") ELEMENTS[1]

PREFACE

This appendix summarizes information presented at an OTA workshop on cost containment and cost minimization in NASA's projected civilian "space station" program. This program is expected to result in the Government's acquisition of elements of an overall in-space infrastructure support system. The 2-day workshop was held on October 18 and 19, 1983, and was attended by more than a dozen senior professional representatives from (non-NASA) high-technology Government organizations, Government-related aerospace industry organizations, and non-space industry organizations. Most of those attending were either former senior NASA professionals or had worked often on large NASA contracts. The views of invitees unable to attend are also contained in this appendix. A Glossary of Terms appears at the end of the document.

The workshop discussions were limited to a NASA program that would develop infrastructure elements without significant participation by foreign governments or the private sector in either funding or overall management. Such involvement would bring with it additional considerations that would have to be addressed early in the planning stages of the project in order to avoid serious, cost-increasing program changes.

Moreover, the workshop discussions assumed that NASA staffing for the project would remain at the minimum levels required to obtain the infrastructure at the earliest date and in the most cost-effective manner.

Workshop participants did not attempt to quantify, in either absolute or percentage terms, the estimates of possible cost reductions expected to result from using the management and technical approaches suggested here.

The first section summarizes the results of the 2 days of discussion; it is divided into the two areas on which the discussion centered: management considerations and technical considerations. A synthesis of the discussions in these two areas is presented in the next two sections. The last section is a set of tentative conclusions for the consideration of NASA and Congress.

Summary

Recent history indicates that only about one-third of the cost of acquiring a space system is directly related to hardware. Management, engineering, integration, test, software, documentation, and other acquisition support activities use up the remaining two-thirds. Although many ways that promise to cut costs in a civilian space infrastructure ("space station") program were discussed at the workshop, program philosophy and management were emphasized.

Some of the cost issues have already been recognized by NASA and may indeed be incorporated into NASA's current cost-control activities. These issues are nonetheless included here in order to bolster the argument that NASA will have to change the way it acquires high-technology space assets if acquisition unit costs are to be sharply reduced.

The major cost issues are summarized below:

COST-CONTAINMENT CONSIDERATIONS

- New **technology: In general, the cost of in-space infrastructure elements is directly related to the amount of new-technology research, development, test, and evaluation** (RDT&E) invested in the program. To minimize cost, NASA should adopt an approach that would minimize the amount of new technology necessary to meet performance objectives. Because NASA Centers have their own continuing agendas and tend to incorporate their own RDT&E interests into large, popular, long-term development programs, the extent of involvement of the Centers in the management of large space programs affects the cost of those programs.
- **Sufficient management authority:** NASA's current plan to designate a separate Associate Ad-

[1] Workshop conducted for OTA by Computer Sciences Corp.

ministrator for the program is both necessary and appropriate. The structure, responsibilities, and authorities of the management organization reporting to this Associate Administrator are also vital for controlling costs.

- **Careful definition:** An extensive definition phase (e.g., the present NASA Phase A/B) could help minimize costs by determining precisely what capabilities are required to meet specific objectives; technology development should be limited to those requirements.

These issues, discussed in terms of management and technical considerations, are summarized below.

MANAGEMENT CONSIDERATIONS

- **Centralized management:** A centralized, high-level NASA organization to manage development and procurement could lower cost by reducing layers of management, minimizing the number of organizational and design interfaces, and coordinating parallel development efforts. It could also simplify coordination of technical and management efforts.
- **System engineering and integration:** Strong system engineering and system integration efforts **(see** Glossary) both by contractors and by NASA could reduce the number of technical interfaces, allow most design conflicts to be resolved in-house, and help ensure that the overall system is engineered for optimal performance.
- **Bounded program:** Defining a bound, or end point, to the initial acquisition, including development, activities could contain costs by eliminating the possibility of prolonged RDT&E so as to reach an early initial operational capability (IOC).
- **Separation of NASA's general RDT&E costs from infrastructure acquisition costs:** The initial development should be based as much as possible on available technology. And only those RDT&E costs that directly contribute to development should be charged to this program.
- Development **of new cost models:** Current cost models will not provide accurate estimates of the funding needs of the future civilian "space station" program. These models were developed for efforts that had requirements fundamentally different from the needs of the proposed "space station. "

TECHNICAL AND PROCUREMENT CONSIDERATIONS

- **Current technology:** Based on the requirements defined to date for an operational civilian "space station, " **extensive technological development does not appear to be necessary to obtain its necessary elements. Elements based on current technology would be less expensive to produce, with some exceptions would appear to have reasonable long-term operation and maintenance costs,** would permit later improvements, would not require as extensive a management effort, and would cost the taxpayer less,
- **Performance objectives requirements:** The strong Phase A/B effort that NASA currently performs is required. However, if NASA develops detailed design specifications and procures hardware on the basis of their use, contractors' initiatives to meet or better schedules and costs would be inhibited. Performance objectives (with specified minimums) based wherever possible on current technology would allow contractors to meet the program requirements in the most cost-effective and timely manner.
- **Contract incentives:** By specifying performance objectives that could be met with minimal advances in technology, NASA would encourage contractors to propose the most efficient cost and schedule approaches. Incentive contracts that both reward and penalize would help to ensure that these objectives are met.
- **Design issues:** Adopting standards, defining and maintaining simple" interfaces, replicating 'basic elements, and specifying common hardware would simplify design and development, reduce change-migration across the interfaces, and reduce the impact of nonrecurring costs.

Management Considerations

Both the management philosophy and practice under which any space program is conducted are usually dominant factors in determining the cost of the various program elements. Sound management practices must include cost avoidance, cost minimization, and cost containment. The following management practices should keep space system acquisition costs low:

- centralize the development program management organization and have it report directly to the NASA Associate Administrator;
- use proven industry contractors for acquiring the major program elements;
- set specific endpoints for the initial development phase; and
- develop and implement management practices that emphasize, and wherever possible reward, cost reduction and cost containment.

CENTRALIZED MANAGEMENT

A centralized organization to manage the acquisition program could reduce costs by concentrating the control and integration of all technical, cost, and scheduling activities. Clear lines of responsibility; centralized direction; strong control over budgets, funds, and technical decisions; and control over such factors as interface and communality would be enhanced under such an approach. Splitting program management among different NASA centers, as has sometimes been the practice in the past, could make it difficult to develop a fully integrated "space station." However, the centers should be used, as necessary, to provide specific expertise or technical support.

The management organization, which would be responsible for contracting for the various program elements, should be given a large measure of authority. The organization could be located at a Center in order to have access to technical and administrative support. Such an organization must have an experienced technical arm; to achieve that, expert personnel from NASA Centers could be assigned to the program management office.

This centralized approach would enable a program manager to more easily assess risks and make cost-reducing decisions, primarily because he or she would be freed from conflicting pressures from other parts of the organization. (This reasoning supports the argument that individual NASA Centers should not be given management control over elements of the program,) Under this approach the central program management team would have the best chance to evaluate costs, scheduling, and performance objectively, and to produce balanced emphases and decisions.

When a Center does manage the development of technology or hardware for the program, it should be on a subcontract basis from the program management office. It should have a specific development time and cost. Inasmuch as current technology would be used wherever feasible, long-term RDT&E programs at the NASA Centers would not burden the acquisition program with their associated costs and management demands. While new-technology RDT&E is an important continuing function of the NASA Centers, it should be funded separately unless it uniquely meets the performance or cost objectives of the space infrastructure program.

SYSTEM ENGINEERING AND INTEGRATION

In any complex system, each component or subsystem should be designed with the objective of enhancing the performance of the entire system. Thus, compromises must be made among the various subsystems so that the complete system—not just each component of it—performs as well as the technological state-of-the-art and the funds available for its acquisition will allow. This activity is known as system engineering. System integration is the term used to describe activities aimed at ensuring that the individual subsystems work together to create a well-functioning whole. Both of these concepts involve much more than just technical performance. In the case of NASA-procured systems, acquisition costs and operating and maintenance costs also should be important considerations. Usefulness to system users, such as simplicity of access, is another, and long life and easy evolution to the next step may be others. More detailed factors might include ease of flight preparation, in-orbit maintenance, and updating, for example.

Many past system engineering and integration efforts at NASA have emphasized the technical or mission performance. Certain changes that have occurred during the past 25 years of space effort should now allow NASA to broaden its view of system engineering and integration.

Until very recently, the civilian space program has been (it had to be) characterized as a very high-technology program that has had to bootstrap itself: that is, the technology often had to be developed during the same time interval that it would have to be incorporated into the spaceflight hardware. Thus, NASA's responsibility was not only to manage the aerospace contractors that build the mission hardware but also to establish both internal and external RDT&E capabilities to carry out the necessary parallel technology development. In discharging these dual roles, NASA, of necessity, has been intimately involved in design and development of the systems it was procuring. Indeed, doing so was the only practical way by which NASA could effectively communicate its requirements to its contractors. As a consequence of these circumstances, NASA has tended to concentrate on the hardware design and performance aspects of system engineering and integration—sometimes at the expense of cost containment.

Two factors present today should allow NASA to broaden its emphasis from hardware design considerations of system engineering and integration to other, equally important matters: 1) the relatively advanced state of the technology—especially that available for this program—and 2) the evolving sophistication of U.S. industrial capability. After 25 years of space technology development and operational experience in its use, essentially all of the technology is in hand to build a sophisticated, long-life, reasonably priced civilian "space station" for operation in LEO. Also, the aerospace industry has changed significantly. Part of NASA's original charter was to fos-

ter **and enhance the space technology know-how of U.S. industry. To a considerable extent, NASA has achieved this objective: many senior personnel in** industry have devoted their entire careers to space-related activities, and many have come to the industry from **NASA–in various fashions NASA gave many of these and other individuals their professional "start."**

Because of these factors, several cost-reduction possibilities now exist. Inasmuch as space systems should be built using current technology unless new technology would lower life-cycle costs, in many cases NASA should be able to specify the use of already existing hardware. Using this technology, together with current industry sophistication, should enable NASA to transfer more of the system engineering and integration associated with hardware design to industry, freeing NASA system engineers to concentrate on cost minimization and avoidance, operability, and other important matters. Of course, NASA must continue to ensure that all of the space infrastructure elements work together efficiently; that the major interfaces are defined, controlled, and integrated; and that the end use objectives are met. A NASA centralized project management organization would be responsible for these efforts. In particular, the organization could ensure that appropriate tradeoffs are made that result in reduced development and O&M costs.

BOUNDED ACQUISITION PROGRAM

NASA's present emphasis on the "evolutionary character" of the "space station" program, while embodying many good programmatic features, gives rise to a very real concern—that is, the pace at which initial elements of the integrated system become available for early operational use. Program delays often are associated with over-sophistication built in during the definition phase or with unrealistically stringent specifications. In addition, many engineers and scientists have a tendency to keep improving the design at all levels—improvements which also can result in delays in advancing to operational status.

This concern could be allayed by the very practical approach of establishing a program consisting of a bounded acquisition phase, including development, for the procurement, launch, in-orbit assembly, and acceptance of the infrastructure elements defined as providing initial IOC. The centralized program management office would carry out this phase. All other related or supporting activities would have separate budgets and would be subcontracted to other NASA offices after negotiation of performance specifications, costs, and schedules. Even the bounded program should have identified elements that could be eliminated or moved off-line in event of cost, schedule, or performance problems in order to meet the IOC date. This approach provides considerable flexibility should unforeseen program difficulties occur—as they almost always do.

The program's initial operational phase would be initiated on the IOC date, but the operational planning would be begun earlier by a parallel program organization. A well-thought-out transition plan to move from the acquisition to the operational phase should be developed as a part of Phase A/B and acted upon throughout the acquisition phase so that effective and comprehensive operating procedures exist at the outset of operations. Thus, the program organization needed to conduct the operational phase should be established by NASA during Phase B. This organization would work with the acquisition program office and with other operations organizations within NASA. In particular, it would become familiar with the operations of the Shuttle, Spacelab and other space infrastructure elements in order to gain experience in their use.

The two program organizations–acquisition and operations—should work together to obtain low life-cycle costs. Cost estimates should be keyed first to the two program phases and then to schedules, in order to foster sound decisionmaking regarding the program's ongoing budget. During the operations phase, the overall concept of a civilian "space station" should be reviewed periodically, in close concert with the private sector, to determine whether the Government should continue, expand, or reduce operations based on considerations of life-cycle costs and national benefits.

COST AWARENESS AND CONTROL

Establishing and maintaining cost awareness among aerospace engineering personnel in both Government and industry should be a major part of any program activity and should begin at the definition phase. At that phase, it is important that the definition be complete within the scope of the bounded program. This activity should include an estimate of costs of all elements of the work to be done. System designers should participate in this process and be responsible for any budget alterations assigned to them. Contractor costs and schedules must be realistic and contractors should be made aware of the need to estimate them accurately.

Cost awareness can be promoted through motivational programs. One useful approach involves contract incentive fees for cost, schedule, and performance. However, when this arrangement is used, the contractor must not be overly constrained in his problem-solving efforts. The incentive contract is a

motivational technique that could be used effectively at all levels of the organization. It could be augmented at the lower levels by direct awards for cost-saving suggestions, underbudget performance, rapid problem-solving, and similar efforts that reduce the costs of a particular facet of the program.

Key to any effective cost control activity are accurate cost estimates. Estimates that are too low break down the cost control process. Estimates that are too high create a "vacuum" that will surely be filled. Moreover, cost models based on previous programs will not give satisfactory results for this program because those models use weight, volume, safety, and complexity factors that are significantly different. A quantitative analysis is needed to correct existing cost models. In the meantime, bottom-to-top estimates may prove instructive, particularly when applied to already existing technology or subsystems.

Life-cycle costing may dictate design decisions that are more costly initially but that provide savings over the long term. Program operating environments must also be considered for their effects on costs: designing for a fail-operational, as compared to a fail-safe, working environment is costly. The concept of acceptable risk, particularly human risk, as it affects costs should be analyzed anew, because the in-orbit "space station" operating environment is inherently much more tolerant of operating difficulties than has been the case in previous space programs. The ability to repair equipment and rescue personnel also should be taken into account.

Finally, to be effective, cost estimates, whether derived from cost models or otherwise, must assume a reasonably small development effort for solving unexpected problems. Additional funds should be set aside to handle such problems, but access to this money should be very carefully controlled.

Technical and Procurement Considerations

The kind of technology to be used, and the division of tasks between private contractors and NASA Centers during the acquisition process must be considered in order to achieve the lowest unit cost. The following factors should also be kept clearly in mind:

- The United States, the European Space Agency countries, Canada and other countries have already invested enormous amounts of money and effort to develop, test, and use sophisticated space technology.
- The aerospace industry has "come of age, " and now can be expected to exercise ingenuity in containing costs and meeting performance and time schedules without the detailed NASA management oversight required in the past.
- Conflicts of interest often exist between RDT&E-oriented NASA Centers and the system acquisition management office responsible for overall capability optimization, cost containment, and meeting of schedules.

USE OF CURRENT TECHNOLOGY

Together with various ground and space transportation infrastructure, appropriate in-space infrastructure should provide NASA and other users with cost-effective capabilities to pursue many important space-related objectives. It is quite appropriate that NASA consider the program in this larger context while making plans for its development. And, the character and magnitude of the NASA Centers' involvement in this planning activity must bean important part of this consideration.

The various NASA Centers are developing preliminary concepts for individual infrastructure elements and associated subsystems. These design concepts are technologically sophisticated and are being developed on an individual subsystem basis. It appears that these subsystems are to be packaged in modules that are as independent as possible from each other, and that the infrastructure central complex will bean aggregate of these modules.

Proceeding with the acquisition of such individual subsystems in this fashion could be evidence of inadequate system engineering capability, or inadequate management strength, or both. Both are needed to enforce those top-down tradeoffs and compromises necessary to ensure that the overall system—and not just the individual subsystems or modules—functions as well as possible, Experience has shown that early hesitation regarding system engineering can often result in increasing difficulty later in the enforcement of such compromises; measures taken to integrate subsystems that, by then, do not inherently fit together can be a very costly experience.

It appears that NASA may now be planning to employ a substantial amount of new and sophisticated technology in the program, and to have a parallel program for the development of this technology. it is very important that NASA first analyze, based on performance requirements and cost reduction/avoidance objectives alone, whether developing this new technology is necessary. In particular, it should seek sound professional advice from outside NASA in order to balance any internal tendency to favor new technology development. It must be repeated that, for the most part, a functional "space station" could be built using current technology. It could be cost effective in ad-

dressing important, long-term, civilian space program goals and objectives. And it should be designed so that it could be modified during its operating life as new, more cost-effective, technologies are developed "off-line."

INCENTIVE CONTRACTING VIA PERFORMANCE SPECIFICATIONS

To date, most NASA spaceflight activities have involved planning for and procuring hardware that has been at the leading edge of the technology. Accordingly, because it has had to issue detailed engineering specifications to contractors, NASA has been heavily involved in the technical aspects of such procurements. It is NASA's present intention to issue engineering specifications for procurement after the detailed definition is determined in a combined Phase A/B study. This process would tend to over-constrain potential private-sector contractors: the detailed design, budget, schedule, and expected performance would be predetermined. However, design changes are usually necessary to resolve unanticipated problems that occur as the design is developed. The need for such changes in turn may adversely affect the budget, schedule, and performance. Design changes have been the chief reason that spaceflight hardware has been so costly.

However, if the overall infrastructure was engineered first as a whole, then NASA could procure it on the basis of performance specifications rather than detailed engineering specifications. A detailed Phase A/B preparation would still be required, but its purpose should be to determine the performance objectives and minimum requirements of the overall infrastructure, and then of the specific elements, ensuring that all specifications are necessary and achievable. Such an approach provides contractors with incentives for achieving the performance objectives within cost and on schedule.

Specifying the desired performance, and providing contract incentives for achieving performance and for bettering costs and schedules, could minimize unit costs, Further, with negative incentives—i.e., penalties for failure to meet the costs and schedules–agreed-to unit costs could also be minimized. NASA should carefully define an acceptable incentive fee structure that relates to a predetermined level of risk acceptance for the program. Contractors would be responsible for any trade-offs to meet the performance specified. NASA's system engineering and integration role would be to define the areas where the elements meet and to ensure that the elements do in fact work together. This procedure is used by COMSAT to procure hardware for satellite communication systems from the aerospace industry, and has been highly successful and cost effective.

DESIGN ISSUES

For-profit companies understand the importance of good design practices in minimizing the cost of manufactured products. These practices include using standard components or subsystems when appropriate, minimizing and simplifying interfaces, and replicating basic elements as often as possible. It is expected that space hardware contractors will use such design practices if NASA encourages them to do so.

As noted earlier, however, NASA seemingly now plans to procure the infrastructure elements by means of detailed engineering specifications. Such a plan could prevent contractors, when the seemingly inevitable design changes crop up, from calling on the most cost-effective design options to remedy the problem.

Moreover, detailed design specifications are rarely developed with overall cost effectiveness in mind. Reflecting their past experience, NASA Centers often emphasize technical excellence and complete elimination of risks, even when the safety of people is not a concern, almost regardless of the costs.

But if performance specifications were written to require minimal use of new technology, design practices would not be an issue. Contractors could do what they do best—design cost-effective equipment that meets the Government's specified performance needs.

Acceptable risks should be assessed during NASA's Phase A/B definition to determine where performance specifications and, ultimately, design specifications could be relaxed to contain and minimize costs.

Conclusions

The primary conclusions of the OTA workshop follow.

CENTRALIZED MANAGEMENT OF INFRASTRUCTURE DEVELOPMENT

Effective and efficient management of the proposed program could be achieved by establishing an organization with a single point of authority and control at a high level within NASA. To ensure complete integration of all management interfaces, this organization should control all prime contractors directly and involve only those Centers necessary for the technical execution of the program. This central NASA management organization should be responsible for establishing performance specifications and for defining and managing interfaces between major elements. The prime contractors for these major elements should be

fully responsible for the system engineering and integration of their respective elements.

MINIMIZATION OF THE USE OF NEW TECHNOLOGY

It is almost axiomatic that cost and risk will be minimized if the IOC infrastructure is built using proven, state-of-the-art technology to the extent feasible. Space technology has now developed to the point that future RDT&E and associated facilities should be funded separately from this program; they should not be dependent on justification by any one large space program for their inauguration or continuation. RDT&E performed at NASA Centers should be funded solely on the basis of need to support long-range space science, applications, or technology development. NASA should seek outside advice as to what new technology is needed in order to offset any possible in-house bias in favor of costly, and perhaps unnecessary, development.

PERFORMANCE SPECIFICATIONS AND INCENTIVE CONTRACTS

Significant cost savings could be realized if NASA were to procure major elements of the "space station" based on performance specifications, rather than on detailed design specifications, Contracting should include incentives and penalties based on performance objectives so that the contractors would be prompted to apply initiative and ingenuity in minimizing costs while meeting schedules and performance.

CONTRACTOR SYSTEM ENGINEERING AND INTEGRATION

If infrastructure elements were procured on the basis of incentive contracts defined by performance speci-" fications, design details would be the responsibility of the contractors, not NASA. By implication, contractors for major infrastructure elements would also perform the system engineering and integration for their elements. The centralized NASA program office would be responsible for defining, controlling, and integrating the interfaces.

FINITE, BOUNDED ACQUISITION PROGRAM

Costs could be contained if the program were planned as a finite, bounded acquisition program specifically designed to achieve an early IOC. The acquisition phase would include the procurement, launches, on-orbit construction, and acceptance testing of the flight systems. The later, separately managed, operations phase would then be initiated and reviewed periodically. The effect would be to bound all acquisition costs, including development costs, and to provide a fixed framework for operations planning,

RISK MANAGEMENT

With the program based, insofar as possible, upon proven current technology, operational risk could be examined rationally as a cost factor. Alternative approaches to quantifying risk acceptance should be explored; complete risk avoidance at any cost is not always required and is very costly.

Glossary of Terms

Available technology-space technology, including hardware, software, techniques, and capabilities that need no further development for inclusion as part of the infrastructure ("space station").

Bounded program–Predetermined end point of any research, development, test and **evaluation (RDT&E)** program, in terms of time and costs based on realistically achievable objectives.

Cost models–Formal methodologies for estimating the cost of planned future spacecraft subsystems/systems based on extrapolations of the cost of previously developed similar subsystems/systems, with appropriate weighting factors for differences in weight, volume, safety, complexity, past and/or anticipated cost increases, etc.

Components–The lowest level of decomposition of the parts that comprise a subsystem.

Configuration control–Formally established project control procedures for proposing and approving changes to a developing system by assessing the effects of possible changes on the other components/subsystems within the system, on the system performance, and on the interfaces with other systems.

Current technology-(See available technology.)

Design specifications- Detailed engineering specifications for the procurement and manufacture of elements of the infrastructure,

Definition phase–The initial phase of any proposed NASA high-technology development and/or acquisition program. (NASA proposes to spend more effort than usual on the definition phase of a space infrastructure—civilian "space station' '—program, corresponding to its more conventional Phases A and B so as to permit better estimates of infrastructure use, technology, and costs to be made, thereby enabling NASA to go directly into Phase C contracting following procurement funding approval.)

Elements–The highest level of decomposition of the modules, free flyers, platforms, and transportation vehicles that comprise any infrastructure.

Engineering specifications–(See design specifications.)

Incentive contracts-Contracts that reward the contractor for meeting or bettering performance, schedule and/or cost estimates while complying with all minimum specifications. Penalties are imposed for not meeting schedules, costs, or specifications.

Infrastructure-The totality of surface and in-space components, subsystems, modules, elements, and, perhaps, in-space human crew that are to be used to support various space activities efficiently and effectively. (See "Space Station.")

Interfaces-The point or points at which adjacent subsystems, systems, modules, or elements of any infrastructure come together in a structural, mechanical, electrical, or functional sense.

Life cycle cost–Total cost from start of concept through development, production, deployment, and operation throughout the useful life of the infrastructure. Includes all maintenance, operational, and peripheral costs.

New technology—Technology that either is nonexistent and must be developed or does not exist in fully usable form, and which must at least be changed and perhaps be developed further before it becomes "avail able." This implies that additional costs must be incurred to bring the technology to a useful stage.

Open-ended program–A program without a defined end point in time and/or cost and which, in many cases, tends to be self-perpetuating.

Performance requirements-Quantitatively stated functional requirements; they must precede engineering or design specifications.

Phases A, B, C, D–Fundamental elements of NASA's usual approach to the development and acquisition of large, high-technology systems:

Phase A–Study of conceptual design options and alternatives for accomplishing the desired objectives.

Phase B—Trade-offs to select one or more generally acceptable approaches as most cost effective. Usually provides first-order cost estimates based on past experience with analogous systems.

Phase C–Detailed design, which begins to provide information for a more accurate bottom-to-top cost estimate.

Phase D–Actual system development. Usually done on a cost basis, with an incentive fee; rarely procured at a fixed price. There is continuous management by NASA and, at times, negotiation regarding performance, costs and/or schedules.

(In phases A and B, suggestions regarding appropriate technologies are usually heavily influenced by NASA.)

RDT&E– Research, development, test, and evaluation **(or** engineering.)

Space Station–Infrastructure elements located in the Earth's space, perhaps containing a human crew, used to support space activities efficiently and effectively. (See "Infrastructure.")

System engineering-System design methodology that adjusts components and subsystems in order to achieve the best possible performance from the system as a whole in addressing specified objectives; system initial and life cycle cost is usually an important consideration; acquisition time can also be an important consideration.

System integration-The engineering necessary to ensure that all of the individual subsystems interface properly so that the complete system performs as it should.

Test bed (RDT&E)–A facility for simulating the environment and/or external interfaces so that systems and subsystems can be tested realistically.

TITLE II—NATIONAL COMMISSION ON SPACE (PUBLIC LAW 98-361)

Purpose

Sec. ***201.*** It is the purpose of this title to establish a National Commission on Space that will assist the United States–

(1) to define the long-range needs of the Nation that may be fulfilled through the peaceful uses of outer space;

(2) to maintain the Nation's preeminence in space science, technology, and applications;

(3) to promote the peaceful exploration and utilization of the space environment; and

(4) to articulate goals and develop options for the future direction of the Nation's civilian space program.

Findings

Sec. 202. The Congress finds and declares that–

(1) the **National Aeronautics and Space Administration, the lead civilian space agency, as established** in the National Aeronautics and Space Act of 1958, as amended, has conducted a space program that has been an unparalleled success, providing significant economic, social, scientific, and national security benefits, and helping to maintain international stability and good will;

(2) the National Aeronautics and Space Act of 1958, as amended (42 U.S.C. 2451 et seq.), has provided the policy framework for achieving this success, and continues to be a sound statutory basis for national efforts in space;

(3) the United States is entering a new era of international competition and cooperation in space, and therefore this Nation must strengthen the commitment of its public and private technical, financial, and institutional resources, so that the United States will not lose its leadership position during this decade;

(4) while there continues to be a crucial Government role in space science, advanced research and development, provision of public goods and services and coordination of national and international efforts, advances in applications of space technology have raised many issues regarding public and private sector roles and relationships in technology development, applications, and marketing;

(s) the private sector will continue to evolve as a major participant in the utilization of the space environment;

(6) the Nation is committed to a permanently manned space station in low Earth orbit, and future national efforts in space will benefit from the presence of such a station;

(7) the separation of the civilian and military space programs is essential to ensure the continued health and vitality of both; and

(8) the identification of long range goals and policy options for the United States civilian space program through a high level, representational public forum will assist the President and Congress in formulating future policies for the United States civilian space program.

National Commission on Space

Sec. 203. (a)(l) The President shall within ninety days of the enactmert of this Act establish a National Commission on Space (hereinafter in this title referred to as the "Commission"), which shall be composed of 15 members appointed by the President. The members appointed under this subsection shall be selected from among individuals from Federal, State, and local governments, industry, business, labor, academia, and the general population who, by reason of their background, education, training, or experience, possess expertise in scientific and technological pursuits, as well as the use and implications of the use of such pursuits. Of the fifteen members appointed, not more than three members may be employees of the Federal Government. The President shall designate one of the members of the Comission appointed under this subsection to serve as Chairman, and one of the members to serve as Vice Chairman. The Vice Chairman shall perform the functions of the Chairman in the Chairman's absence.

(2) Members appointed by the President under paragraph (1) of this subsection may be paid at a rate not to exceed the daily equivalent of the annual rate of basic pay in effect under section 5332 of title 5, United States Code, for grade GS-18 of the General Schedule for each day, including traveltime, during which such members are engaged in the actual performance of the duties of the Commission. While away from their homes or regular places of business, such members **may be** allowed travel expenses, including per diem in lieu of subsistence, in the same manner as persons

employed intermittently in the Government service are allowed under section 5703 of title 5, United States Code. Individuals who are not officers or employees of the United States and who are members of the Commission shall not be considered officers or employees of the United States by reason of receiving payments under this paragraph.

(b)(l) The President shall appoint one individual from each of the following Federal departments and agencies to serve as ex officio, advisory, non-voting members of the Commission (if such department or agency does not already have a member appointed to the Commission pursuant to subsection (a)(l):

(A) National Aeronautics and Space Administration,

(B) Department of State.

(C) Department of Defense.

(D) Department of Transportation.

(E) Department of Commerce.

(F) Department of Agriculture.

(G) Department of the **interior.**

(H) National Science Foundation.

(1) Office of Science and Technology Policy.

(2) The President of the Senate shall appoint two advisory members of the Commission from among the Members of the Senate and the Speaker of the House of Representatives shall appoint two advisory members of the Commission from among the Members of the House of Representatives. Such members shall not participate, except in an advisory capacity, in the formulation of the findings and recommendations of the Commission.

(3) Members of the Commission appointed under this subsection shall not be entitled to receive compensation for service relating to the performance of the duties of the Commission, but shall be entitled to reimbursement for travel expenses incurred while in the actual performance of the duties of the Commission.

(c) The Commission shall appoint and fix the compensation of such personnel as it deems advisable. The Chairman of the Commission shall be responsible for–

(1) the assignment of duties and responsibilities among such personnel and their continuing supervision; and

(2) the use and expenditures of funds available to the Commission. In carrying out the provisions of this subsection, the Chairman shall act in accordance with the general policies of the Commission.

(d) To the extent permitted by law, the Commission may secure directly from any executive department, agency, or independent instrumentality of the Federal Government any information it deems necessary to carry out its functions under this Act. Each such department, agency, and instrumentality shall cooperate with the Commission and, to the extent permitted by law and upon request of the Chairman of the Commission, furnish such information to the Commission.

(e) The Commission may hold hearings, receive public comment and testimony, initiate surveys, and undertake other appropriate activities to gather the information necessary to carry out its activities under section 204 of this title.

(f) The Commission shall cease to exist sixty days after it has submitted the plan required by section 204(c) of this title.

Functions of the Commission

Sec. 204. (a) The Commission shall study existing and proposed space activities and formulate an agenda for the United States civilian space program. The Commission shall identify long range goals, opportunities, and policy options for United States civilian space activity for the next twenty years. In carrying out this responsibility, the Commission shall take into consideration—

(1) the commitment by the Nation to a permanently manned space station in low Earth orbit;

(2) present and future scientific, economic, social, environmental, and foreign policy needs of the United States, and methods by which space science, technology, and applications initiatives might address those needs;

(3) the adequacy of the Nation's public and private capability in fulfilling the needs identified in paragraph (2);

(4) how a cooperative interchange between Federal agencies on research and technology development programs can benefit the civilian space program;

(5) opportunities for, and constraints on, the use of outer space toward the achievement of Federal program objectives or national needs;

(6) current and emerging issues and concerns that may arise through the utilization of space research, technology development, and applications;

(7) the Commission shall analyze the findings of the reviews specified in paragraphs (1) through (6) of this subsection, and develop options and recommendations for a long range national civilian space policy plan.

(b) Options and recommendations submitted in accordance with subsection (a)(7) of this section shall include, to the extent appropriate, an estimate of costs and time schedules, institutional requirements, and statutory modifications necessary for implementation of such options and recommendations.

(c) Within twelve months after the date of the establishment of the Commission, the Commission shall submit to the President and to the Committee on Commerce, Science and Transportation of the Senate and the Committee on Science and Technology of the House of Representatives, a long range plan for United States civilian space activity incorporating the results of the studies conducted under this section, together with recommendations for such legislation as the Commission determines to be appropriate.

Appendix F
FINANCING CONSIDERATIONS AND FEDERAL BUDGET IMPACTS

With respect to the conceptual objectives proposed for discussion in chapter 6 of this report, it is important to ask not only the question of "what would their attainment cost?," but the next most important questions as well: "who would pay these costs?" and "under what circumstances?" This appendix addresses these questions, and then turns to an examination of how novel answers thereto could affect the Federal space budget.

Financing Considerations

International Considerations

Note that what is being discussed here are not NASA[1] goals and objectives, but national goals and objectives and, at least for the most part, goals and objectives for the benefit of all mankind. Therefore, for instance, when other countries can reasonably be expected to have an active interest in cooperating with the United States as parties in multinational activities, this also should be taken into explicit consideration when considering their cost to us.

John Logsdon has recently observed that: "There is now the possibility of a global division of labor and cost in space science [and exploration] . . ."[2] Officials of the European Space Agency (ESA), for instance, are reported to be of the view that ESA: " . . . anticipates contributing . . . perhaps up to 30 percent of the estimated cost [of any] space station . . .".[3] And OTA has been told, informally, by a well-informed foreign official that, if Japan and Canada also were to be included in a full partnership arrangement, "in the limit" this fraction could be appreciably larger. And recently fractions of 35 to 40 percent overall have been publicized.[4] (This 35 to 40 percent, i.e., some $3 billion [1984$] apparently is now seen by NASA as in addition to the $8 billion [1 984$] now estimated by NASA as the cost of the IOC infrastructure to the United States.)

Simply for purposes of illustration, an assumption of one-third foreign government cost-sharing is taken here as a reasonable expectation regarding at least objectives (1), (2), (3), and (4). A further assumption is made: that the U.S. Government will view its civilian space leadership role as one of orchestrating the interests, abilities, and activities of any and all of those countries **of the world** who wish to participate in space research, exploration and development, and that it will play this role in the vigorous, sensitive and innovative fashion that competitive space circumstances and the high political and financial stakes require.

Indeed, if the United States does not lead the world in this fashion, there is growing indication that, perhaps sooner than we imagine (especially with the successful Spacelab experience behind them), several European countries themselves would be prepared to "go it alone." And the U. S. S. R., as well, may be beginning to exhibit an "outreach" toward cooperation with countries outside of the Communist bloc.

The Solar System Exploration Committee of NASA's senior Advisory Committee has taken specific and positive recognition of this opportunity in its recent report: ***Planetary Exploration through Year 2000.***[5] Under the general heading of "International Cooperation, " the Committee observes that: "In the 1960s and 1970s, planetary science was clearly dominated by the United States, with major contributions by the U.S.S.R. The trend in recent years has been an increase, relative to the United States and the U. S. S. R,, in the capability and interest of other nations to participate in planetary science and exploration missions. This increasing interest has occurred against a backdrop of budgetary constraints in all nations, together with increasing sophistication and cost of planetary missions. Combined, these factors suggest that more planetary science can be accomplished in a given period if interested nations coordinate their planning and, occasionally, undertake joint missions."

But no allowance is made in the NASA budget projections–projections that average some $400 million/ year (1 983$) throughout the rest of this century[6]–for the important financial contributions that other countries could be expected to make to space science and exploration programs.

One very long-term, very successful example of multinational cooperation in the space field was developed under the enlightened leadership, and with the important assistance of, the United States: **the** Inter-

---

1 Other Government agencies, primarily the National Oceanic and Atmospheric Administration (NOAA), have Important space interests and responsibilities as well.

2 *Science,* Jan. 6, 1984, p. 11 et. seq.; see esp. p. 13.

3 *Science,* Dec. 9, 1983, pp. 1099-1100.

4 *Nature,* Mar. 15, 1984, p. 216.

5 1 983, see esp. pp. 25-26.

6 See NASA's report, p. 27.

national Telecommunications Satellite Organization (I NTELSAT). Some 20 years ago, the only countries involved in civilian satellite communications were the United States, the United Kingdom, and France. Today, INTELSAT counts 109 countries as members; the countries conduct a useful, profitable, and rapidly growing space-related business–long-haul trunk communications—which grossed some $400 million in 1983, and in which the required U.S. investment share is now down to less than 25 percent. (The business is now so profitable that, last year, potential competitors came forward.) And INTELSAT has been joined by INMARSAT in the maritime communications area; INMARSAT counts even the U.S.S.R. among its members. '

Finally, the President has taken steps to see that the matter of international cooperation—indeed, perhaps international collaboration—in the civilian space area will receive direct and important attention by the executive branch. In his radio address during the week of his 1984 State of the Union message, the President observed that: "international cooperation . . . has long been a guiding principle of the United States space program [and that] just as our friends were asked to join us in the Shuttle program, our friends and allies will be invited to join with us in the space station project." In response to this Presidential directive, **NASA's Administrator has recently visited several other** countries to explore the matter of their working on any "space station" program with the United States.

Private-Sector Considerations

Also, when our private sector can reasonably be expected to assume the cost (in anticipation of commercial-industrial sales and profits), or at least an important fraction thereof, this should be taken into consideration. This should be the case for at least objectives ***(2), (5), (6), (7),*** and (10) (see ch. 6).

For much of 1983, and still continuing, NASA has had a task force studying what it might do to speed and enlarge the "commercialization" of space. And the Department of Transportation (DOT) has recently been charged by the President with assisting an expendable launch services industry.

Now the President has given a powerful general thrust to the matter of much greater economic participation by our private sector in space-related activities, In his **1984 State of the Union address he expressed himself of the judgment that: " . . . space holds enormous promise for commerce today," and was** quite specific in justifying his decision to start work on the development of space infrastructure in terms of its eventually allowing for " . . . living and working in space for . . . economic . . . gains. " In his later radio address he stated that he expects: " . . . a space station will open up new opportunities for expanding human commerce . . . ."

The legislative branch too, perhaps smarting because of the seemingly endless Landsat commercialization difficulties, and responding to the continuing hesitancy within NASA concerning their space applications responsibilities, has moved to strengthen the law quite specifically regarding "space commercialization." NASA'S fiscal year 1985 authorization bill, which became Public Law 98-361 with the President's signature on July 16, 1984, makes a basic change in the "National Aeronautics and Space Act of 1958." It amends section 102 of the act by including a new paragraph (c) as follows: "The Congress declares that the general welfare of the United States requires that [NASA] seek and encourage, to the maximum extent possible, the fullest commercial use of space." This is strong, unambiguous and "revolutionary" language for our publicly funded civilian space program's "char ter."

It would seem reasonable, therefore, to imagine that the kind of private sector participation suggested here in addressing certain of the 10 conceptual objectives will, in fact, be realized.

International Plus Private-Sector Cost Sharing Considerations

Thus, when the financial support of both other countries and our own private sector are taken into consideration, the ***net*** U.S. public cost of meeting these 10 conceptual objectives is estimated to be some $25 billion to $40 billion (1984$), i.e., some 70 percent of their estimated $40 billion to $60 billion total cost.[8] (See table F-l). The average net public cost for the first 5 years considered here would be some $2.0 billion/year (1984$); during the last 5 of the 25 years the average net public cost could decrease to about one-half this rate. (See table F-2.)

These expenditure rates suggest that, with the completion of the initial modest Moon settlement, the projected NASA budget could allow a major program of human exploration of Mars (and of one or more asteroids) to begin in earnest.

[7] For a thorough discussion of the satellite communications area, see the OTA report *International Cooperation and Competition in Civilian Space Activities* (now in press).

[8] Norman R. Augustine, "The Aerospace Professional . . . and High-Tech Management," *Aerospace America,* March 1984,

Table F-l .—USA Net Public Cost (billions of 1984 dollars)

	Total cost	Other countries	Private sector	USA net public cost
1. Establish a global information system/service regarding natural hazards	2	0.7	0	1
2. Establish lower cost reusable transportation service with the Moon, and establish human presence there	20	7	1	13
3. Use space probes to obtain information regarding Mars and some asteroids prior to early human exploration	2	0.3	0	2
4. Conduct medical research of direct interest to the general public	6	2	0	4
5. Bring at least hundreds of the general public into space for short visits	0.5	0	0.4	0.1
6. Establish a global, direct, audio broadcasting, common-user system/service	2	0	2	0.2
7. Make essentially all data generated by civilian satellites and spacecraft directly available to the general public	0	0	0	0
8. Exploit radio/optical free-space electromagnetic propagation for long distance energy distribution	0.5	0	0	0.5
9. Reduce the unit cost of space transportation and space activities	5	0	0	5
10. Increase space-related private sales[a]	0.5	0	0.5	0
Total	= 40[b]	=10	=4	= 26[c]

[a]This would advance the prospects of successfully a& dressing all goals and all other objectives.
[b]The actual total cost including a 50-percent increase could be $60 billion; the same increase could affect all other cost estimates.
[c]With a 50-percent cost increase, this cost could be $40 billion.

NOTE: Some rows do not sum due to rounding.

Table F-2.—First Rough Estimate of the Total Cost/Year and the Net Public Cost/Year (in billions, 1984 dollars) for the First 5 Years, of Attaining the 10 Conceptual Objectives

	Total cost (and the years) to attain each "objective	Total cost/year, first 5 years	Net public cost (and the years) to attain each objective	Net public cost/year, first 5 years
1.	2 (lo)	0.20	1 (lo)	0.10
2.	20 (15)	1.33	13 (15)	0.87
3.	2 (15)	0.13	2 (15)	0.13
4.	6 (5)	0.40	4 (5)	0.28
	0.5 (5)	0.10	0.1 (5)	0.02
6	2 (lo)	0.20	0.2 (lo)	0.02
7.	0 (25)	0.00	0.0 (25)	0.00
8.	0.5 (lo)	0.05	0.5 (lo)	0.05
9.	5 (15)	0.33	5 (15)	0.33
10.	0.5 (25)	0.02	0 (25)	0.00
	=40	= 3	=26	==2

Economic-Growth Considerations

PROJECTED GROWTH IN PRIVATE SECTOR SALES AND RELATED TAX REVENUES

Beyond the cost-offsetting financial participation of other cooperating countries and our own private sector, it is important to obtain some useful sense of the present, and future, marginal net cost to the U.S. general public of its civilian space activities—i e., setting aside further consideration of the over $200 billion (1984 adjusted) "sunk cost" of our investments in the civilian space area to date, and considering only expenditures from now on.

To date, except for the satellite communications area, the United States' publicly supported civilian space program has been essentially one of basic research, exploration, and development of technology required to support both. Economic returns have been expected to result from general "spin off" to the private sector from these otherwise-directed R&D activities. The general sense is that to some important extent that has apparently happened, even though the

evidence on the macroeconomic level is admittedly difficult to come by.

Let us start, therefore, probably conservatively but objectively and reasonably quantitatively, by noting that the present (1 983 year-end) U.S. commercial-industrial space-related annual sales of capital equipment (essentially all in the satellite communications business, for satellites, their launching, and their associated ground equipments) are some $1.6 billion/ years If satellite insurance sales, operations and maintenance (O&M) charges related to surface equipments, end-to-end circuit lease charges and lease charges for in-space microwave transponders (there are now some ***400*** in orbit which are owned by U.S. companies) are added, total U.S. private-sector space-related sales are now probably $2 billion to $3 billion per year.

This sales figure, at least in the satellite communications long-haul circuit leasing area where records have been kept since the outset of private sector operations (see INTELSAT's annual reports) is a consequence of an average annual growth rate of some 15 percent/year, compounded, for nearly the past 20 years.[10]

If it is assumed that the total of all Federal, State, and local tax rates on these sales averages 20 to 30 percent,[11] then, roughly, $0. 5 billion/year in Government tax revenues are now being derived from these sales. Thus, while the gross civilian space-related Government expenditures are some $7 billion/year today, in fact the net Government expenditures could be considered to be significantly less—i.e,, effectively some $6.5 billion/year (or some 7 percent) less.

Now, assume for the purpose of illustration that the total sales generated in the satellite communications area, enlarged in time by space-related navigation, position fixing, remote sensing, materials processing, tourism, private launch and transportation services, space platform leasing, etc., continues to grow at the current rate, i.e., some 15 percent/year, compounded–a doubling about every 5 years. The projection for this rate of growth has been made by NASA and others and may prove to be conservative. The most recent projection, by Jerry Grey[12] is that: "Satellite communications demand is still growing rapidly at between 20 and 30 percent per year and is projected to continue at this rate to the end of the century, despite potential inroads by optical fibre cables. projections for turn-of-the-century annual volume (spacecraft, launch and integration services, and communications services themselves) range from $30 billion to$100 billion." A 15 percent/year, compounded, sales growth throughout 1984-2000 on a 1983 base of $2 billion would produce sales of some $20 billion in 2000; on a $3 billion base, some $3o billion.

Of course, the rate of 15 percent/year, compounded, may prove to be optimistic. **If, instead, a 10 percent figure is used, the year 2000 sales projection would exceed $10 billion on a present $2 billion base, and $15 billion on a present $3 billion base.**

Further, assume either that Government civilian space-related expenditures remain at about $7.o billion (1983) per year or that they grow, in real terms, at 1 percent per year, compounded, as is NASA's desire and this administration's expressed intention.

(No attention is given here as yet to the reimbursements made to the Government for the provision of space-related Government services—now almost wholly the reimbursement for the provision of Shuttle flights.)

Under such circumstances and with such assumptions, over time, the effective net Government cost of supporting the civilian space program (in billions of 1983 dollars) could be considered as decreasing rapidly. (See tables F-3 and F-4.)

Under either assumption regarding future NASA appropriations, and a projected 15 percent/year tax revenue increase, the "break-even" point would be reached in some 20 years; i.e., in one generation the effective net public investment required to underwrite our entire Government civilian space program—either a program of today's magnitude or, by then, some 20 percent larger–would be reduced to zero. Even with the lower 10 percent/year tax revenue growth projection, the effective net public cost would then be a great deal less than today's. And, over the next 20 years, a total of tens of billions of dollars (1 984) in tax revenues would have been generated.

This is such an important observation and prospect that it bears further elaboration. For the prospect that such extraordinary private-sector space-related sales and tax revenue projections might well be attained suggests that the Government could commit itself to promoting, vigorously and innovatively, the growth

---

[9]This figure was provided to OTA by Janet Martinusen ot the Aerospace Industries Association of America, Inc.)

[10]In what follows, note that no attention is given either to the influence of inflation or to any decrease in nonspace-related sales as a consequence of the growth of space-related sales; i.e., this discussion must be considered—particularly by economists–as illustrative and qualitative, not methodologically exhaustive and quantitative.

[11]*Economic* RepOr-f *of the President,* transmitted to the Congress, February 1984 (Washington, DC: U.S. Government Printing Office, 1984); *Study of 1982 Effective Tax Rates of Selected Large U.S. Corporations,* prepared by the staff of the Joint Committee on Taxation (Washington, DC: U.S. Government Printing Office, November 1983).

[12]"Investing In Space . . . ," *Aerospace America,* April 1984, p. 90.

Table F-3.—Growth in Tax Revenues From Private Sector Space. Related Sales, and Their Influence on the Net Cost of the Federal Civilian Space Program (billions of 1983 dollars per year–assuming a 15°/0 sales growth rate)

Years	Tax revenues growth @ 150A/year	Government space expenditure net cost	
		A constant $7 billion/ year (1983)	$7 billion (1983) increasing at 1'\Olyear
O (1983)	0.5	6.5	6.5
5 (1988)	1,0	6.0	6.4
10 (1993)	2.0	5.0	5.7
15 (1998)	4.1		4.0
20 (2003)	8.2	(1.2)	0.3
25 (2008)	16.0	(9.5)	(7.5)

Table F-4.—Growth in Tax Revenues From Private Sector Space-Related Sales, and Their Influence on the Net Cost of the Government Civilian Space Program (billions of 1983 dollars per year–assuming a 10% sales growth rate)

Years	Tax revenues growth @ 10%/year	Government space expenditure net cost	
		A constant $7 billion/ year (1983)	$7 billion (1983) increasing at 1'/Olyear
O (1983)	0.5	6.5	6.5
5 (1988)	0.8	6.2	6.5
10 (1993)	1.3	5.7	6.4
15(1 998)	2.1	4.9	6.0
20 (2003)	3.4	3.6	5.1
25 (2008)	5.4	1.6	3.6

of commercial and industrial space-related sales. That is, the Federal Government, working in close concert with the private sector, would work to see, over time, a great increase in such high-technology sales, thereby generating proportionally much greater tax revenues which could be looked upon as "offsets" to the public R&D expenditures on space. Also, if successful, such an initiative would result in an effective transfer of much of the responsibility for the health and growth of space-related economic activities from the public to the private sector.

The President has just taken particular note of this possibility: the July 20, 1984, White House "Fact Sheet" entitled "National Policy on the Commercial Use of Space" states that "In partnership with industry and academia, Government will expand basic research and development which may have implications for investors aiming to develop commercial space products and services."

Of course, private-sector gross revenues also can be expected to support space-related commercial-industrial R&D. Again, assuming that sales grow at the average annual rate of 10 to 15 percent, compounded, and assuming as well that about 5 percent of these sales is spent by the private sector on space-related R&D (probably a conservative assumption; C. Paul Christensen recently observed that: " . . . a successful high-technology company normally must spend 5 to 10 percent of its gross sales on R&D"[13]) then, 20 years from now, a private-sector R&D investment rate of some $1 billion to $2 billion (1 984) per year would have been reached.

The total Government investment (again, assuming that NASA appropriations increase at 1 percent "real growth" per year, compounded) plus the commercial-industrial investment in space-related R&D would be expected to increase substantially overtime. (See table F-5, which assumes a 15 percent projected growth rate for the private sector.) By the end of the next quarter of a century, the country's overall space-related R&D activities could reach a level that would be nearly twice the size of today's Government program and that, by then, would be increasing at some 5 percent/year, compounded.

These are extraordinary projections, and they could well turn out to be conservative ones.

To put such numbers into a space R&D and exploration perspective, note that a U.S. public expenditure of an average of some $1 billion/year over, say, 15

[13] *Science,* Apr. 13, 1984, P. 117

Table F-5.—Growth in Yeariy U.S. Space investment, Federal (increasing at 1°/0 annually) Pius Private (increasing at 150/0 annually)

	Investment (billions of 1983 dollars per Year)		
Years	Government	Private	Total
O (1983)	7.0	0.1	7.1
5 (1988)	7.4	0.3	7.7
10 (1993)	7.7	0.5	8.2
15 (1998)	8.1	1.0	9.1
20 (2003)	8.5	2.0	11.0
25 i2008)	9.0	4.1	13.0

to 20 years could allow us, along with other cooperating countries, to place a modest settlement on the Moon. In similar fashion, an additional some $2 billion/year, over 20 to 30 years, could allow a first human landing on the planet Mars. And each of these sums would include paying for that kind and amount of LEO infrastructure specifically required to assure the efficient operational conduct of these ventures,

HISTORICAL BASES FOR A PROJECTION OF SALES GROWTH IN THE PRIVATE SECTOR

While, of course, no brief can be held with complete confidence, either **for the absolute rates** of increase of space-related sales, or for such a long-term continuation thereof as is outlined here—and other countries have also already clearly perceived the great longer-term economic prospects in the space area[14]—it must be remembered that the U.S. investment in the publicly supported civilian space area has provided an enormous base of assets, understanding and experience for so doing; that the active interest of our private commercial-industrial sector in investing in space assets and activities, already non-trivial, is quickening; and that we have other high-technology growth "stories" as useful references: air transportation, computers, radio, television, medical technology, communications, etc.

For instance, President Karl G, Harr of the Aerospace Industries Association observed, in his report of December 1983, that " . . . there has been a considerable acceleration in the building of commercial communications satellites . , . that's just the beginning of an indicated boom; worldwide projections show enormous increases in demand for satellite communications services between now and the end of the century." And Secretary of Transportation Elizabeth Dole is recently quoted as saying, with reference to that Department's new responsibilities for the commercialization of expendable launch vehicles: " . . . this involves 'a whole new industry' with growth prospects estimated at up to $10 billion over the next decade. "[15]

A recently published OTA report, *International Competition in Electronics,* **notes that: "Sales of the more than 6,000 electronics manufacturers in the United States exceeded $125 billion in 1982 and are growing rapidly . . . the growth rate over the past decade reached nearly 15 percent [per year, compounded]."** [16-17]

As one general example: ***Forbes*** magazine has recently[18] surveyed the sales growth of 25 leading companies in the electronics area, comparing the average of such sales for the most recent 5 years with the average of the preceding 5 years. The annual sales growth of the top one-half of the companies averaged 23 percent, compounded.

The early days of commercial radio provide another example of how the growth rate of a newly introduced service supported by new technology can attain phenomenal values. "[In] the spring of 1922 . . . the sale of radio sets, parts, and accessories amounted to more than $60 million annually. By the **end** of 1929, sales had climbed to a remarkable $843 million."[19] This is an annual **growth rate of greater than** 40 percent/year, compounded. More recently, lasers and their applications have become at least as **big a high-technology business as has satellite communications, "In the past 2 decades . . . the market for laser-related systems that solve practical problems has grown to over $3 billion per year , . . "**[20]

As an individual company example, over the past 7 years the International Business Machines Corp. (IBM) has seen its sales grow at an average annual rate of 14 percent, compounded, and its top financial officer was quoted late last year as venturing the prediction that " . . . sales growth in the next several years will surpass the 14 percent rate . . . ";[21] in fact, sales grew 17 percent in 1983.[22] Seven years ago IBM's sales

[14] See *th.* OTA report on *International Cooperation and Competition in Civilian Space Activities, 1984.*

[15] *Aerospace Daily,* Jan. 19, 1984, pp. 97-98.

[16] November 1983, p. 108.

[17] N.B. Neither this figure, nor any that follow which reference sales growth in either absolute numbers or annual rates, have been adjusted to reflect the unusually high inflation rates that held during the late 1970s and early 1980s. Consequently, they are inherently "optimistic" if taken as an augury of future sales growth. But, at the same time, this was an epoch during which business expansion was abnormally repressed by the same inflationary pressures—pressures that, one hopes, will not soon be repeated.

[18] Jan. 2, 1984, p. 176.

[19] Steven L. Del Sesto, "Technology and Social Change, " in *Technological Forecasting and Social Change,* vol. 24, pp. 183-196; see esp. p. 183.

[20] *Science,* Apr. 13, 1984, P. 117.

[21] *Wall Street Journal,* Dec. 9, 1983, p. 5.

[22] *Wall Street Journal,* Dec. 19, 1984, p. 2.

were some $15 billion; today they **are some** $40 billion, and 3 years from now could approximate $55 billion. It is clear that the absolute size of sales is not necessarily **an** impediment to further sales growth when desired new assets and services are being introduced and adopted—not even at the $30 billion to $50 billion/year **level.**

Other, more recent, high-technology commercial-industrial examples abound. Over approximately the past decade (ending in 1982) the average annual compound growth rate in sales (taken from Moody's or individual company reports) for the Communications Satellite Cooperation was 15 percent; for INTELSAT and Texas Instruments: 16 percent; for Hewlett-Packard: 23 percent; and for MCI: 68 percent.

Thus, it does seem reasonable to expect that, with energetic and innovative consideration explicitly given to cooperative Government-private sector promotion of United States commercial-industrial space investments and initiatives—initiatives directed both to opening up new uses related to space and to reducing the unit cost of producing space assets and conducting space operations–the next quarter of a century could see truly important, perhaps outstanding, **growth in** our civilian space-related sales, with all that this should imply for employment, tax revenues, international trade, etc. As the earlier referenced OTA report succinctly states: " . . . the United States needs to search for new engines of growth to drive the economy into the 21st century . . . "[23] and " . . . special stress should be laid on . . . R&D and technology plus measures aimed at stimulating investment in new and innovative firms . . . "[24] And, as a recent ***Washington Post*** **article emphasized: "America's strength** in exporting is not in standardized, commodity products, but in high-technology specialized products that draw on the huge pool of American know-how and expertise;] specialized, higher technology products . . . are America's bread and butter."[25-26]

LEGAL AND EXPERIENTIAL BASES FOR FEDERAL/PRIVATE-SECTOR COOPERATION IN ECONOMICALLY DIRECTED R&D

It is important to note that there is some precedent in Federal law for exploring Government-private sector initiatives in stimulating sales in a high-technology domain such as **space.** The "Stevenson-Wydler Technology Innovation Act of 1980"27 states: "(a) Policy. It is the continuing responsibility of the Federal Government to ensure the full use of the result of the Nation's Federal investment in research and development. To this end, the Federal Government shall strive . . . to transfer federally . . . originated technology . . . to the private sector. " Also, for instance, the Department of Defense (DOD), using the 1982 authority incorporated into formal law **by** inclusion of appropriate language in Title 10 of the United States Code, Section 22394, employs very long-term contracting for utility services in its "Venture Capital Energy Procurement Program by the Military Services. "[28] DOD uses this program to excite the private sector to develop and use new technology to provide DOD with energy services at lower cost than otherwise; this approach is now being replicated by certain States and municipalities.

And the features of the "Small Business Innovation Development Act of 1982,"[29] which was enacted to (among other things) " . . . utilize Federal research and development as a base for technological innovation [so as] to contribute to the growth and strength of the Nation's economy, " also could be utilized by NASA, NOAA, DOT and other space-related executive branch offices. This act requires that as much as 1 1/4 percent of the "annual extramural" R&D appropriations of most major Federal agencies be spent with smaller and, presumably, more aggressive, more entrepreneurial, business organizations.

Perhaps, say, a small fraction of 1 percent of the total annual NASA and Commerce/NOAA/DOT appropriations could be spent directly and specifically to prompt activities that offer reasonable promise of furthering the growth of space-related sales in our private sector. In close concert with our private space-related business sector, the Government, in order to realize a more effective linkage of its R&D to the private marketplace, could use these funds to help "focus" the scientific, exploration, and technological results of the other 99.5 percent on the task of increasing business sales.

Such a requirement would be somewhat analogous to that holding for the nine national laboratories that operate under the aegis of the Department of Energy. Under the terms of the Stevenson-Wydler Act (sec. 11 (b)) these laboratories are obligated to spend not less than 1/2 percent of their funds on activities that

---

[23] *International Competition in Electronics, p. 466.*

[24] Ibid., p. 502.

[25] Jan. 8, 1984, p. G 1/G8.

26 Notably, in the private commercial-industrial **world, the space area is not yet even considered to be important in terms of "high technology"—see** *U.S.* **News** ***and World Report,*** **Jan. 16, 1984, p. 38 where, in de fining "High Technology: What Is** It?," **space assets and activities go unmentioned.**

[27] Public Law 96-480, Sec. 11. Utilization of Federal Technology, Oct. 21, 1980.

[28] See an article by this title in the 10th Energy Technology Conference Report, p. 230 et seq.

[29] Public Law 97-219.

would see the technology that they develop, using Federal funds, "transferred" to our private sector. The potential power of such an approach is a matter of public record. One of these laboratories, Sandia, spends more than 1 percent of its budget in this fashion, and has had a long list of successful transfers. [30] In one area alone, that of clean-room technology used by hospitals and electronics companies, Sandia estimates that sales have now reached $200-million/year by 70 companies. Much as in the case of satellite communications and NASA (but scaled down by just an order of magnitude), the total tax revenues provided by such sales, probably some $50 million, is some 8 percent of Sandia's $7oO million annual budget.

In an article entitled "The Making of a Conservative Science Policy," Wil Lepkowski observes that: . . . from 1982 onward [the present] Administration . . . drew back from its original insistence that the government had no business developing new technologies for the private sector. " He suggests that: **"In fact, there is nothing** wrong with the government's developing ideas, concepts, and hardware for the private sector to exploit for the good of the public." And he concludes: "What the administration will notice in 1984, and try to stimulate, is evidence from research agencies that their programs are contributing to the economy, innovation, and productivity. We can expect to see growing evidence of the major contribution of the conservative revolution: closer and closer integration of economics with science and technology. After many decades, policymakers are doing a better job of bringing the two together. That, by itself, is an achievement."[31] The President's 1984 State of the Union address and his subsequent radio address both bear out Lepkowski's expectation in the civilian space area,

The Congressional Research Service recently observed that: " . . . many analysts believe that Federal policy to harmonize governmental and private sector support of private science and technology probably could be improved significantly without [an excessive] degree of government-private sector collusion . . . "[32] And it prepared a report for the use of the Committee on Commerce, Science, and Transportation of the United States Senate that notes that:[33] "With increasing [prospects] of space commercialization . . . the Government may have to provide funding if the private-sector [at the outset] is unwilling or unable to fund the R&D [and it] may be necessary to increase support for initial R&D funded by the Government if commercial activity is deemed important." The report raises serious questions as to ". . . the effectiveness of [the] mechanisms [now used by NASA] for promoting [space] commercialization," But the heretofore-mentioned example of Sandia and, for instance, the pressure for AT&T's Bell Labs, with its $2 billion/year budget, to become consumer- and market-oriented,[34] suggests that the executive branch, and especially NASA and Commerce/NOAA/DOT, if properly prompted by the President and Congress and led by imaginative, experienced, and tough-minded leaders, could make the required transition. For instance, NASA's recent request for proposals for a Shuttle marketing support contract is an important step in that direction.[35] So is Executive Order #12465 (February 24, 1984), designating the Department of Transportation as the lead agency "for encouraging and facilitating commercial ELV activities by the United States private sector."

THE SPACE-RELATED PRIVATE SECTOR GROWS UP

Slowly, the private sector is learning more about space, more about the prospects of doing business there, and more about how to deal with the Government in so doing.

For instance, NASA and the 3M Co., St. Paul, MN, signed a memorandum of understanding earlier this year that will enable the company to fly aboard the Shuttle several experiments related to the growth of organic crystals and the development of thin films. NASA has signed one major joint endeavor agreement with McDonnell Douglas and Johnson & Johnson for the production of pharmaceuticals in space, and currently is in discussions with approximately 20 companies contemplating future space endeavors.

Other firms have been involved in discussing a wide range of experimental activities such as electroplating enhancement, improvement in catalytic materials, formation of glass alloys, research in long-term blood storage, development of remote-sensing techniques, development of smaller space vehicles and components of a "space station," etc. The firms include: Fairchild, Micro-Gravity Research Associates, John Deere, Space Industries Inc., DuPont, Honeywell, A.D. Little, Orbital Sciences Corp., American Science and Technology Corp., Ball Aerospace, C2Spaceline, Sparx, Spaceco Ltd., and Astrotech.

[30] *Technology Transfer at Sandia National Laboratories: First Annual Report, SAND83-0345,* March 1983.
[31] Technology *Review,* January 1984, p. 39 et seq.
[32] See the *CRS Review,* January 1984, p. 14.
[33] Congressional Research Service, "Policy and Legal Issues Involved in the Commercialization of Space" published as a Committee Print (No. 98-102), Sept. 23, 1983, pp. 17-18.
[34] See */formation Technology Research and Development, OTA,* in Press.
[35] NASA Industry Briefing for STS Marketing, May 1, 1984.

Of greatest importance in considering the matter of the Government's working to promote growing private-sector sales i n the civilian space-related area are, of course, the views and policies of the leaders of both the legislative branch and the executive branch, particularly the President himself. President Reagan has made his views and desires clearly known. In his radio address of January *28,* 1984, he stated: "We expect space-related investments to grow quickly in future years . . . .NASA, along with other departments and agencies, will . . . promote private investment . . . we're going to bring into play . . . the vitality of our free enterprise system. "

So, whatever views the administration has in regard to close cooperation between the Government and the U.S. private sector in general, and however much attention such cooperation receives in other areas, it is now clearly, indeed forcefully, on record as supporting it between civilian space-related offices such as NASA and the commercial-i ndustrial-financial institutions that can be expected to profit from such cooperation. To repeat: " . . . NASA . . . will promote private investment , . . ,"

And, of course, to the extent that the private sector provides space assets and operational services that technology, the marketplace, and its growing free-enterprise capabilities allow, and conducts RDT&E activities at the multibillion-dollar/year level, NASA would be able to concentrate on the more basic research, the more demanding space exploration, and the more exotic "cutting edge" technology required to support both.[36] First hints of the potential of such a private sector move are beginning to appear: Rockwell International is studying the commercial construction, launch, and maintenance of a private-sector in-orbit "electric utility, " costing more than a billion dollars, that would be prepared to offer electrical power as a service to a host of space operations; J' Space Industries is readying itself to develop, produce, and deploy a sophisticated space platform by 1988; the Astrotech Corp. is holding discussions about their purchasing a Shuttle Orbiter at a price of some $2 billion (1984); etc.

Impacts on the Federal (NASA) Space Budget

What can be concluded from simply studying and projecting the Federal civilian space program budget itself?

As an initial reference point, the NASA fiscal year 1984 budget authorized by Congress is adopted. It is usually presented in the general form of table F-6. (The data source is the Congressional Record. In all that follows, rounding can influence the last figure in sums. All other Government ***civilian*** space expenditures are small relative to NASA's, and their inclusion would unnecessarily complicate this discussion.) Inasmuch as only the space R&D elements of this budget are of concern here, this table presents just these.

Table F-6 shows that $2 billion will be spent on Shuttle production (Space Transportation Capabilities Development) in fiscal year 1984. The Shuttle production and development program is nearly complete; when it ends, there will be about $2 billion that is unspoken for in the NASA budget, if current funding levels continue.

Two other financial matters must be taken into consideration: the reimbursement to the Government for Shuttle transportation services when the Shuttle is used by the private sector and other countries; and the 1 percent/year real growth in funds that would be made available to NASA if the present administration's expressed budget views in this regard for future fiscal years are accepted by Congress and continue indefinitely.

That the payments for use of Shuttle launch services are already reimbursing the Government for 4 percent of the publicly funded civilian space program, and that these payments are now expected to grow to truly important dimensions soon (perhaps 14 percent by 1989), should be appreciated by all with a serious interest in the cost of this program. The NASA Ad-

Table F-6.—NASA Overall Authorization for Fiscal Year 1984 (billions of dollars)

A. R&D.	5.88
B. Construction and facilities	0.13
C. Program management	1.24
D. Total	=$7.30
The R&D element (A, above) consists of external contract funds for:	
1. Space transportation capabilities development	2.01
2. Space transportation operations	1.55
3. Physics and astronomy	0.56
4. Planetary exploration	0.22
5. Life sciences.	0.06
6. Space applications	0.31
7. Technology utilization	0.01
8. Aeronautical research and technology . . .	0.32
9. Space research and technology.	0.14
10. Tracking and data acquisition	0.70
	=$5.90

[36] See the article by George Mueller in *Aerospace America,* January 1984, p. 84 et seq.

[37] See the International Section of *Renewable Energy News, December* 1983.

ministrator has reported at a press briefing[36] that the reimbursements—primarily for **Shuttle flight services—approached $300 million in fiscal year 1984, and that he expects that they will approximate some $7oo million in fiscal** year 1985. Further, he stated that: "1 still anticipate reaching the break-even point in 1988 or 1989. "

Thus (even without considering the cost-offsetting importance of tax revenues generated by private-sector space business) the net cost to the public of our publicly funded civilian space program even now is significantly less than the gross cost because of this Shuttle cost reimbursement: it is $6.6 billion net out of $6.9 billion gross. Next year the expected reimbursement income would more than offset a 4 percent inflation rate. (Considering the tax revenues as an additional effective "offset" would reduce the $6.6 billion to $6.1 billion. That is, the net cost could be considered to be some 11 percent less than the gross cost, and falling.)

And, finally, NASA now has some reason to expect that funds for its program would increase by 1 percent/year plus any inflationary increase. If inflation compensation plus 1 percent real growth becomes emplaced in NASA's annual appropriations, it would have important influence on the pace at which space-related objectives, such as those suggested here, could be pursued. A 1 percent "real growth" on a base of $7 billion/year would provide a total addition of some $10 billion by the end of this century, and a total approaching $25 billion in the next 25 years—i.e., an average of some $1 billion per year (1984$) over this latter interval.

Under the assumptions made here, three conclusions may be reached concerning cost and financing considerations:

1. In the absence of any private-sector or other-country financial participation-i .e., under circumstances whereby the full cost of addressing the ten conceptual objectives would be defrayed by U.S. public funds, and assuming that the funds continuing to become available year-to-year would be in the same amount as those now available under NASA's "budget envelope," then, starting 2-3 years hence, the essential completion of Shuttle-related development could provide some ***$2*** billion (1984) /year—i,e., some $50 billion (1984$) over the next quarter of a century,
2. If, to this RDT&E "wedge" is added the anticipated 1 percent/year "real growth" in appropriations, in addition to an indexing of appropriations to neutralize the influence of inflation, the next ***25*** years could see a total of some $25 billion (1984$) added to the $50 billion made available through the Shuttle RDT&E completion—i.e., a total of some $75 billion (1984$). Thus, just these two measures alone would suffice to see (from the financial viewpoint alone) that the ten conceptual objectives could be satisfactorily addressed within the next quarter of a century.
3. If the two preceding assumptions are retained, and if, in addition, the full cost were to be shared by other countries and our private sector, in the fashions and to the degrees outlined earlier, this measure (again, speaking just of financial, not political or technological circumstances) would allow the ten conceptual objectives to be attained in, say, 20 years since this would allow some $15 billion (1984$) of public funds to be used to accelerate the schedule. Alternatively, the 1 percent per year "real growth" and/or the "base" figure of $2 billion could be reduced.
4. Whether or not such public and other funds are indeed made available could be influenced, positively and importantly, by two other circumstances:
   - If the incorne from other countries and the private sector for the use of the Shuttle increases as is now hoped/expected, then, in a half-dozen years or so, this would amount to NASA appropriations being, in effect, "offset" by as much as some $2 billion (1984$) per year;
   - . If our private space-related sector could be stimulated to maintain its present rate of sales growth, it could begin to make significant additional space R&D investments itself—investments that could grow to billions of dollars/year in the next two decades or so; and
   - . If the tax revenues "thrown off" by our private sector's commercial-industrial sales continue to increase in the future as they have in the past, i.e., if a 10 to 15 percent per year, compounded, growth rate were to continue over the next quarter of a century, they could, at least to some extent, be looked upon also as an important "offset" to the gross public cost of our publicly supported space program, inasmuch as they would amount to scores of billions of dollars (1984$).

Clearly, under such general circumstances as these, funding limitations would not prevent the United States from undertaking an ambitious publicly supported civilian space program throughout the next quarter century.

[38] *The Washington Post,* Feb. 6, 1984, page A-9.

Appendix G
GLOSSARY OF ACRONYMS, ABBREVIATIONS AND TERMS

Glossary of Acronyms and Abbreviations

ACC – **Aft Cargo Carrier**
AEM – Applications Explorer Module
ASO – Advanced Solar Observatory
ASTO – Advanced Solar Terrestrial Observatory
ASEB – Aeronautics and Space Engineering Board (of the NRC)
AXAF – Advanced X-Ray Astrophysics Facility
B — Billion
BOB – Bureau of the Budget
CDG – Concept Development Group
CNES – Centre National D'Etudes Spatiales (France)
CNR – **National Research Council (Italy)**
COM – Center of Mass
COMM — Communications
COMSAT – Communications Satellite Corporation
DBS – Direct Broadcast Satellite
DDT&E – Design, Development, Test, and Evaluation
DMS – Data Management Subsystem
DOC – Department of Commerce
DOD – Department of Defense
DOT – Department of Transportation
ECLSS – Environmental Control and Life Support Subsystem
EDO – Extended Duration Orbiter
ELV – Expendable Launch Vehicle
EOL – Earth-Orbiting Laboratory
EOS – Electrophoresis Operations in Space
EPS – Electrical Power Subsystem
ESA – European Space Agency
ET — External Tank
EUMETSAT – European Meteorological Satellite Organization
EURECA – European Retrievable Carrier
EUTELSAT – European Telecommunications Satellite Organization
EVA – Extravehicular Activity ("walking in Space")
FF — Free Flyer
g – **Gravity**
GEO – Geostationary Earth Orbit (sometimes, less precisely, geosynchronous)
GN&C – Guidance, Navigation, and Control
GPS – Global Positioning [Space] System (see NAVSTAR)
HEO – High Earth Orbit
IMS – Information Management Subsystem
INMARSAT – International! Maritime Satellite Corporation
INTELSAT — International Telecommunication Satellite Corporation
IOC — Initial Operational Capability
ISAS — Institute of Space and Astronautical Science (Japan)
ISF — Industrial Space Facility
ISTO — Initial Solar Terrestrial Observatory
IVA — Intravehicular Activity
JEA – Joint Endeavor Agreement
JSC – Johnson Space Center
Kbps — Kilobits per second (of data handling)
KSC — Kennedy Space Center
kg — kilogram (2.2 pounds)
kW – kilowatt
LDEF — Long Duration Exposure Facility
LDR — Large Deployable Reflector
LEO — Low-Earth-Orbit (usually 200-600 km)
LIDAR — Light Detection and Ranging
LSS – Large Space System
M — Million
— meter (3.3 feet)
MAC — Modular Attitude Control
MAS — Mission Analysis Study
MBB — Messerschmitt-Boelkow-BIohm
Mbps — Megabits per second (of data handling)
MDA — Multiple Docking Adaptor
MESA — Modular Experimental Platform for Science and Applications
MMS — Multimission Modular Spacecraft
MMU — Manned Maneuvering Unit
MOL — Manned Orbiting Laboratory
MORL — Manned Orbital Research Laboratory
MOSC — Manned Orbital Systems Concept

MPS — Materials Processing in Space
MSC — Manned Spacecraft Center
MSFC — Marshall Space Flight Center
NAC — NASA Advisory Council
NAE — National Academy of Engineering
NAS — National Academy of Sciences
NASA — National Aeronautics and Space Administration
NASDA — National Space Development Agency (Japan)
NAVSTAR — DOD Satellite Navigation System (see GPS)
NOAA — National Oceanic and Atmospheric Administration (within DOC)
NRC — **National Research Council (of the NAS-NAE)**
O&M — **Operations and Maintenance**
OART — **Office of Advanced Research and Technology (within NASA)**
OAST — **Office of Aeronautics and Space Technology (within NASA)**
OMB — **Office of Management and Budget**
OMS — **Orbital Maneuvering System**
OMSF — **Office of Manned Space Flight (within NASA)**
OMV — **Orbital Maneuvering Vehicle (formerly designated TMS)**
OSM — **Orbital Service Module**
OTA — **Office of Technology Assessment**
OTV — **orbital Transfer Vehicle**
OWS — **Orbital Workshop**
PEP — **Power Extension Package**
P/L — **Payload**
POV — **proximity Operation Vehicle**
R&D — **Research and Development**
RCS — **Reaction Control System**
RD&P — **Research, Development, and Production**
RDT&E — **Research, Development, Test, and Evaluation (or Engineering)**
r.f. — **Radio Frequency**
RMS — **Remote Manipulator System**
ROTV — **Reusable Orbital Transfer** Vehicle
RWG — Requirements Working Group
SAB — Space Applications Board (of the NRC)
SDV — Shuttle Developed Vehicle
SOC – Space Operations Center
SOLARIS – European Space Platform Concept
SPAS – Space Pallet Satellite
SPS – Solar Power Satellite
SPSS – Shuttle Payload Support Structure
SS – Space Station
SSB – Space Science Board (of the NRC)
SSEC — Solar System Exploration Committee
SSSAS — Space Station Systems Analysis Study
SSTF — Space Station Task Force (within NASA)
STG — Space Task Group (of the National Security Council)
STS – Space Transportation System
TDRS – Tracking and Data Relay Satellite
TDRSS – Tracking and Data Relay Satellite System
TMS — Teleoperator Maneuvering System (former designation for OMV)
TMV — Transport Modular Vehicle
TRKNG — Tracking
TRS — Teleoperator Retrieval System
TSV — Teleoperator Service System
TUSK — Tethered Upper Stage Knob
VAFB — Vandenberg Air Force Base
WBS — Work Breakdown Structure

Glossary of Terms

Base–the central or core set of interrelated, and perhaps interconnected, 28.5° LEO infrastructure ("space station") modules including facilities for power, docking, control, and human habitation.

Cargo bay–the Space Shuttle's central fuselage section (openable to space) in which cargo, equipment, and experiment modules are carried.

Core–(see base.)

Cosmos 1443-a Soviet resupply vehicle for Salyut orbiting spacecraft.

Element–any module, platform, free flyer, or vehicle which is an integral part of the in-space infrastructure, and dependent on one or more other element(s) for its long-term operation.

Free **flyer–an unattached or free-flying uninhabitable satellite (usually dedicated to one purpose or activity) which is serviced by or otherwise dependent on other infrastructure elements.**

Geostationary satellite–a geosynchronous satellite whose circular orbit lies in the plane of the Earth's equator and which thus remains fixed relative to the Earth; by extension, a satellite whose position remains approximately fixed relative to the Earth; its altitude is necessarily approximately 35,000 km above the Earth's surface.

Geosynchronous satellite–an Earth satellite whose period of revolution is equal to the period of rotation of the Earth about its axis.

Infrastructure-a generic term referring to all the elements constituting an interdependent space sup-

port system, consisting of surface and in-space elements.

Leasecraft-proposed commercial, long-term, unpressurized platform that could be used for Earth observation, materials processing in space, etc.

Low-Earth-Orbit (LEO)–an orbit around the Earth at altitudes usually ranging from 200 to 600 km and located at any of various inclinations to the Equator.

Megabit-a data communications rate of 1 million bits (or units) per second.

Module—an element of the infrastructure base or core which provides a unique function for infrastructure operations.

Orbiter–the Shuttle vehicle of the NASA Space Transportation System.

Orbit transfer–change of orbit, usually to one of significantly different altititude or inclination.

order of Magnitude–factor of 10.

Pallet–an open structure attached to an element of infrastructure that provides mounting for equipment, vehicles, or experiments.

Platform–an orbiting multi-use structure capable of supplying limited utilities to changeable payloads and dependent on other infrastructure elements; usually uninhabitable except, perhaps for some, for servicing.

Polar orbit–an orbit whose plane intersects the Earth's axis of rotation.

Salyut–a Soviet inhabited "space station" in LEO, the first model of which was launched in 1971.

Satellite–a body that revolves around another body of preponderant mass and that has a motion primarily and permanently determined by the gravitational forces of attraction between them; generally applied here to an object revolving about the Earth.

Shuttle-the reusable passenger- and cargo-carrying surface-LEO vehicle of the NASA Space **Transportation System; sometimes referred to as the Space Shuttle Orbiter.**

Skylab–an independent orbiting laboratory composed principally of hardware remaining from the Apollo program; inhabited by crews of astronauts during 1973-1974.

Spacelab–a laboratory module, designed and produced by ESA, carried into and out of orbit in the Shuttle cargo bay and supported by the Shuttle power and life support systems.

Space probe–a spacecraft designed to travel out of the gravitational field of the Earth to explore other parts of the solar system.

Space station–a totality of habitable and uninhabitable Earth-orbiting interdependent infrastructure elements constituting a long term in-space support system.

Tracking and Data Relay Satellite System (TDRSS)–a communications system used to relay data directly between orbiting vehicles and a single U.S. ground station at White Sands, NM.

Index

broadening the debate, 103-110
  need for goals and objectives, 105
  policy background, 106
  President Reagan's call for a "space station, " 109
  recent proposals, 108
  space infrastructure as methods and means, 103
  steps toward broader participation, 110
buyer's guide to space infrastructure, 85
  alternative funding rates, 94
  catalog of space infrastructure, 87
  cost drivers, 91
  people and automation in space, 92
  procurement options, 85

Congress:
  House:
    Committee on the Budget, 4
    Committee on Science and Technology, 4, 44, 46, 109
  Senate:
    Committee on Appropriations, 4, 60
    Committee on Commerce, Science, and Transportation, 4

European Space Agency (ESA), 39, 56, 66, 155, 189
evolution of civilian in-space infrastructure, 159-176
  Apollo anomaly, 161
  beginnings of post-Apollo planning, 164
  earliest space infrastructure, 159
  NASA's post-Apollo ambitions dashed, 170
  post-Apollo planning under Thomas Paine, 166
  recent in-space infrastructure, 172
  response to Sputnik, 1957-61
  Skylab: an interim "Space Station, " 171
  "Space Station" plans: during the 1960s, 162

financing considerations and Federal budget impacts, 217-226

infrastructure options, 7
  funding rate options, 12
  procurement options, 10
  technology options, 7
    comparison of options, 8
    space infrastructure platforms, 9
infrastructure required, 17
  cost, 18
  financing, 19
  technology, 17
INTELSAT, 39, 40
international involvement i n a civilian ''space station' program, 177-205
  assessment: pros and cons, 203-205
  factors influencing assessment of international involvement, 198-203
  possible modes of international involvement, 185-189
  potential international partners, 189
  Why international involvement?, 177-185
issues and findings, 25-46

civilian "space station s," 31-35
  alternatives, 33
  concerns about LEO infrastructure, 32
  cost of LEO infrastructure, 33
  infrastructure in LEO, 31
general, 25-31
  NASA's circumstances, 25-28
  transitions, 28
possible legislative initiatives, 43-46
  civilian space policies, goals, objectives, and strategies, 45
  creation of space policy study centers, 46
  strategies for acquiring any new in-space civilian infrastructure, 43
U.S. future in space, 35-43
  arena of peaceful cooperation, 40
  cost reduction, 37
  international space cooperation, 39
  long-term space goals and objectives, 35
  long-term space strategies, 37
  NASA's changing role, 41
  non-Government policy studies
  private sector, 38

legislation:
  Comsat Act of 1962, 103
  National Aeronautics and Space Act of 1958, 25, 35, 103, 106, 110
  National Aeronautics and Space Act of 1985, 30, 45

National Academy of Sciences, 61
National Aeronautics and Space Administration (NASA), 4, 6, 7, 10, 11, 12, 21, 25, 27, 28, 31, 32, 38, 39, 42, 43, 49, 58-60, 103-104
  Solar System Exploration Committee, 61
National Commission on Space, 16, 30, 31, 214
National Oceanic and Atmospheric Administration (NOAA), 29, 30, 38, 39, 40
National Research Council, 49, 61
NATO, 29, 39
National Weather Service, 29
need for goals and objectives, 13
Nixon administration, 106

OTA workshop on cost containment of civilian space infrastructure, synopsis of, 206-213

People's Republic of China, 56, 85
possible goals and objectives, 15
Presidential Space Task Group, 106

Ramo, Simon, 108
rational for space infrastructure, 4-7
Reagan, President Ronald, 107, 109
relation of a "space station" to the U.S. future in space, 3
Report of the Second Advisory Panel Meeting, held at Aspen-Wye Plantation, November 1983, 133-139
  analysis capability, 134

current space station proposal, 133
effect of military programs and interests, 137
geopolitical competition, 138
immediate alternatives to a space station, 135
international cooperation, 136
international economic competition, 138
long-term mission possibilities, 135
NASA operations and organization, 138
private-sector involvement, 136
R&D, 134
results of principal NASA studies on space station uses and functional requirements, 141-158
major findings of the U.S. aerospace industry "Mission Analysis Studies, " 141
AEG, British Aerospace, Fokker, CIR, 156
Aerospatiale, 156
Canada, 156
costs and benefits, 147
Dornier, 156
European Space Agency, 155
evolution of the initial capability, 146
functional capabilities, 143
individual foreign company interests, 156
infrastructure elements, 145
Japan, 156
phased activities (mission sets), 143
role of a human crew, 146
users and uses, 141
NASA synthesis of the "Mission Analysis Studies, " 157
nonaerospace industry interest in Space use, 158

shape of the space future, 19
international, 20
new role for NASA, 21
private sector, 20
space infrastructure, 49-82
alternative infrastructure, 62-82
habitable infrastructure, 70
Columbus, 75
Extended Duration Orbiter (EDO), 70
Spacelab, 72-75
uninhabitable platforms, 62
Boeing MESA, 64
EURECA, 66
Fairchild LEASECRAFT, 62
Long Duration Exposure Facility (LDEF), 66
MBB SPAS, 66
Pleiades Concept, 66
Shuttle Payload Support Structure (SPSS), 66
SOLARIS, 69
Space Industries Platform, 66
shuttle as permanent infrastructure, 77
considerations for any space infrastructure, 50-58
LEO environment, 51
orbits, 50
space transportation, 54
expendable launch vehicle (ELV), 56
manned maneuvering unit (MMU), 56
orbital maneuvering vehicle (OMV), 56
reusable orbital transfer vehicle (ROTV), 56
shuttle, 55
technical considerations, 52
attitude control and stabilization, 52
data management, 52
electromagnetic interference (EM I), 52
life support systems, 54
power, 53
propulsion, 54
thermal energy management, 53
NASA's approach to space infrastructure, 58-60
infrastructure functions, 60
mission analysis studies, 58
National Research Council, 61

Title n-National Commission on Space (P. L. 98-361), 214-216
toward a goal-oriented civilian space program, 113
cost and schedule, 124
indicated infrastructure, 122
possible goals, 113
possible objectives, 113
global disaster avoidance, 115
human presence and activities on the Moon, 117
increasing commercial-industrial space sales, 120
medical research of direct interest to the general public, 117
modernizing and expanding international short-wave broadcasting, 118
obtaining information required for eventual human exploration of Mars and some asteroids, 117
people drawn from the general public, in space, 118
providing space data directly to the general public, 118
reducing the cost of space transportation, 120
using space and space technology for the transmission of electrical energy, 119

U.S. Department of Defense, 4, 29, 30, 39
U.S. Department of Transportation, 38
U. S. S. R., 5, 45

U.S. GOVERNMENT PRINTING OFFICE : 1984 0 - 38-798 : QL 3