Industrial and Commercial Cogeneration

February 1983

NTIS order #PB83-180547

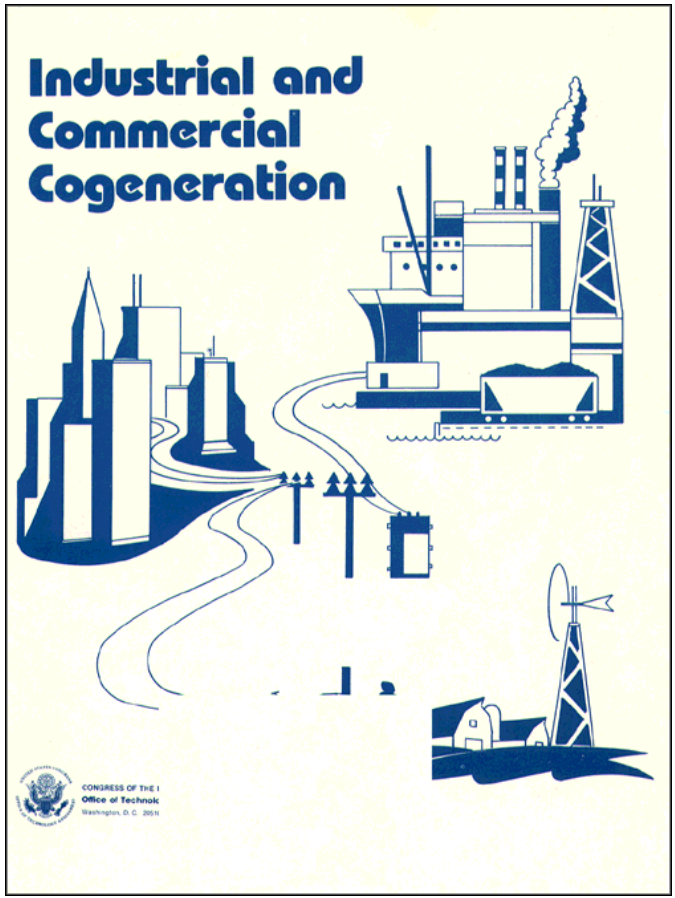

Library of Congress Catalog Card Number 83-600702

For sale by the Superintendent of Documents,
U.S. Government Printing Office, Washington, D.C. 20402

Foreword

This assessment responds to requests by the House Committees on Banking, Finance, and Urban Affairs; Energy and Commerce; and Science and Technology for an evaluation of the economic, regulatory, and institutional barriers to the development of cogeneration systems by utilities, industries, and businesses. This report complements a forthcoming OTA analysis of Industrial Energy Use in evaluating the potential for onsite energy production in industry. The findings also will serve as part of the material to be used in future OTA assessments of other electricity-generating technologies.

The report describes the available and promising future cogeneration technologies, including their likely costs and operating characteristics, and reviews the potential applications for these technologies in industry, commercial buildings, and rural/agricultural areas. It also describes the technical requirements for interconnecting cogeneration systems with the utility grid, and discusses advanced combustion and conversion technologies (fluidized bed and gasification systems) that will enable cogenerators to use fuels other than oil and natural gas. The analysis of cogeneration's market potential focuses on the competitiveness of cogeneration when compared to investments in conservation or in conventional separate thermal and electric energy systems (e.g., an industrial boiler and a central station utility powerplant). In addition, the report examines the possible effects of the widespread use of cogeneration systems on utilities and their ratepayers, and on air quality. Several options for changes in Federal policy in order to enhance cogeneration's market potential, to optimize its ability to displace oil and natural gas, and to mitigate its possible adverse economic and environmental impacts are discussed.

We are grateful for the assistance of the project advisory panel and the advice of numerous individuals in utilities, industry, State governments, trade associations, and universities. Also the contributions of several contractors, who performed background analyses, are gratefully acknowledged.



JOHN H. GIBBONS
Director

Industrial and Commercial Cogeneration Advisory Panel

James J. Stukel, Chairman
University of Illinois

Roger Blobaum
Roger Blobaum & Associates

William H. Corkran
American Public Power Association

Claire T. Dedrick*
California Land Commission

Steven Ferrey
National Consumer Law Center

Todd La Porte
University of California at Berkeley

Evelyn Murphy
The Evelyn Murphy Committee

Theodore J. Nagel
American Electric Power Service Corp.

Thomas W. Reddoch
University of Tennessee

Bertram Schwartz
Consolidated Edison Co. of New York

Harry M. Trebing
Michigan State University

Thomas F. Widmer
Thermo Electron Corp.

Robert H. Williams
Princeton University

* Ex officio. Dr. Dedrick is a member of the OTA Technology Assessment Advisory Council.

OTA Industrial and Commercial Cogeneration Project Staff

Lionel S. Johns, ***Assistant Director, OTA***
Energy, Materials, and International Security Division

Richard E. Rowberg, ***Energy Program Manager***

Jenifer Robison, ***Project Director***

Eric Bazques **Steven Plotkin** **David Strom**

Clark Bullard **Charles Holland** **J. Bradford Hollomon***

Research Assistants

Lois Gottlieb **George Hoberg** **Martin Hsia**

Administrative Staff

Virginia Chick **Marian Grochowski** **Lillian Quigg** **Edna Saunders**

Contractors and Consultants

Thomas Casten
Decision Focus, Inc.
Energy and Resource Consultants, Inc.
ICF, inc.
Edward Kahn
L. W. Bergman & Co.
William Snyder

OTA Publishing Staff

John C. Holmes, ***Publishing Officer***

John Bergling **Kathie S. Boss** **Debra M. Datcher** **Joe Henson**

Doreen Cullen **Donna Young**

● **Project Director through July 1980.**

Acknowledgments

OTA thanks the following people who took time to provide information or to review part or all of the study:

Dwight Abbott
Aerospace Corp.

Weible Alley
Arkansas Power & Light Co.

Douglas Bell
U.S. Environmental Protection Agency

Ben Blaney
U.S. Environmental Protection Agency

Merrilee Bonney
U.S. Environmental Protection Agency

Josh Bowen
U.S. Environmental Protection Agency

Joel P. Brainerd
New York Public Service Commission

John Dadiani
TRW Corp.

Douglas C. Dawson
Southern California Edison Co.

Fred 1. Denny
Edison Electric Institute

Richard Donovan
National Aeronautics and Space Administration

Fred Dryer
Princeton University

Lowell J. Endahl
National Rural Electric Cooperative Association

Peter Freudenthal
Consolidated Edison Co. of New York

Howard Geller
American Council for an Energy Efficient Economy

Marty Gordon
Edison Electric Institute

Tom Grahame
U.S. Department of Energy

J. Steven Herod
U.S. Department of Energy

Ronald Johnson
Aerospace Corp.

R. Eric Leber
American Public Power Association

Tom Lepley
Arizona Public Service Co.

Elliot Levine
Argonne National Laboratory

Glenn Lovin
International Cogeneration Society

Frederic March
Consultant

Tom Marciniak
Argonne National Laboratory

Alan S. Miller
Natural Resources Defense Council

Ralph C. Mitchell, Ill
Arkansas Power & Light Co.

David Morris
Institute for Local Self-Reliance

Dale Pahl
U.S. Environmental Protection Agency

Robert Podlasek
Illinois Commerce Commission

Wilson Pritchett
National Rural Electric Cooperative Association

Arnold Rosenthal
Consolidated Edison Co. of New York

Blair A. Ross
American Electric Power Service Corp.

Barry Saitman
California Energy Commission

Fred Sissine
Congressional Research Service

Elinor Schwartz
State of California, Washington Office

Walt Stephenson
U.S. Environmental Protection Agency

John Williams
U.S. Department of Energy

L. J. Williams
Electric Power Research Institute

R. L. Williams
EBASCO Services Inc.

Mike Zimmer
Cogeneration Coalition, Inc.

Contents

Chapter *Page*

I. Overview . . . . $ 3

2. issues and Findings. 25

3. Context for Cogeneration 49

4. Characteristics of the Technologies for Cogeneration 117

5. Industrial, Commercial, and Rural Cogeneration Opportunities 171

6. impacts of Cogeneration 221

7. Policy Analysis 267

Appendixes

A. Dispersed Electricity Technology Assessment Model 283

B. Emissions Balances for Cogeneration Systems 286

C. Acronyms, Abbreviations, and Glossary 288

index 295

Chapter 1
Overview

Contents

Page

Introduction 3

Cogeneration Technologies 6

The Potential for Cogeneration 10

Cogeneration Opportunities 11
- industrial Cogeneration 11
- Commercial Building Cogeneration 12
- Rural Cogeneration Opportunities 13

Interconnection Requirements 13

impacts of Cogeneration 15
- Effects on Fuel Use..... 15
- impacts on Utility Planning and Operations 15
- Environmental Impacts 16
- Socioeconomic Impacts. 17

Policy Considerations 18
- Oil Savings 18
- Economic incentives for Cogeneration 19
- Utility Ownership 20
- Interconnection Requirements 20
- Air Quality Considerations. 21
- Research and Development. 21

Chapter 1 References 21

Tables

Table No. — Page

I. Summary of Cogeneration Technologies 8

2. Installed Industrial Cogeneration Capacity 11

Figures

Figure No. — Page

I. Historical Overview of Electricity-Generating Capacity, Consumption, and Price, 1902-80 4

2. Conventional Electrica! and Process Steam Systems Compared With a Cogeneration System 7

Chapter 1
Overview

INTRODUCTION

A major focus of the current energy debate is how to meet the future demand for electricity while reducing the Nation's dependence on imported oil. Conservation in buildings and industry, and conversion of utility central station capacity to alternate fuels will play a major role in reducing oil use in these sectors. But cost-effective conservation measures can only go so far, and the industrial and commercial sectors ultimately will have to seek alternative sources of energy. Moreover, electric utilities may face financial, environmental, or other constraints on the conversion of their existing capacity to fuels other than oil, or on the construction of new alternate-fueled capacity.

A wide range of alternate fuels and conversion technologies have been proposed for the industrial, commercial, and electric utility sectors. One of the most promising commercially available technologies is cogeneration. Cogeneration systems produce both electrical (or mechanical) energy and thermal energy from the same primary energy source. Cogeneration systems recapture otherwise wasted thermal energy, usually from a heat engine producing electric power (i.e., a steam or combustion turbine or diesel engine), and use it for applications such as space conditioning, industrial process needs, or water heating, or use it as an energy source for another system component. This "cascading" of energy use is what distinguishes cogeneration systems from conventional separate electric and thermal energy systems (e.g., a powerplant and a low-pressure boiler), and from simple heat recovery strategies. Thus, conventional energy systems supply either electricity or thermal energy while a cogeneration system produces both. The automobile engine is a familiar cogeneration system as it provides mechanical shaft power to move the car, produces electric power with the alternator to run the electrical system, and uses the engine's otherwise wasted heat to provide comfort conditioning in the winter.

Cogeneration is an old and proven practice. Between the late 1880's and early 1900's, oil- and gas-fired cogeneration technologies were increasingly used throughout Europe and the United States. In 1900, over 59 percent of total U.S. electric generating capacity was located at industrial sites (not necessarily cogenerators) (see fig. 1). Because electric utility service during this period was limited in availability, unreliable, unregulated, and usually expensive, this onsite generation provided a cheaper and more reliable source of power. However, as the demand for electricity increased rapidly and reliable electric service was extended to more and more areas in the early 1900's, as the price of utility-generated electricity declined, and as electric generation became a regulated activity, industry gradually began to shift away from generating electric energy onsite. By 1950, onsite industrial generating capacity accounted for only about 17 percent of total U.S. capacity, and by 1980 this figure had declined to about 3 percent. At the same time, cogeneration's technical potential (the number of sites with a thermal load suitable for cogeneration) has been increasing steadily.

There has been a resurgence of interest in recent years in cogeneration for industrial sites, commercial buildings, and rural applications. A cogenerator could provide enough thermal energy to meet many types of industrial process needs, or to supply space heating and cooling and water heating for a variety of different commercial applications, while supplying significant amounts of electricity to the utility grid. Because cogenerators produce two forms of energy in one process, they will provide substantial energy savings relative to conventional separate electric and thermal energy technologies. Because cogenerators can be built in small unit size (less than 1 megawatt (MW)) and at relatively low capital cost, they could alleviate many of the current problems faced by electric utilities, including the difficulty of siting new generating capacity and the

Figure I.— Historical Overview of Electricity.Generating Capacity, Consumption, and Price, 190240

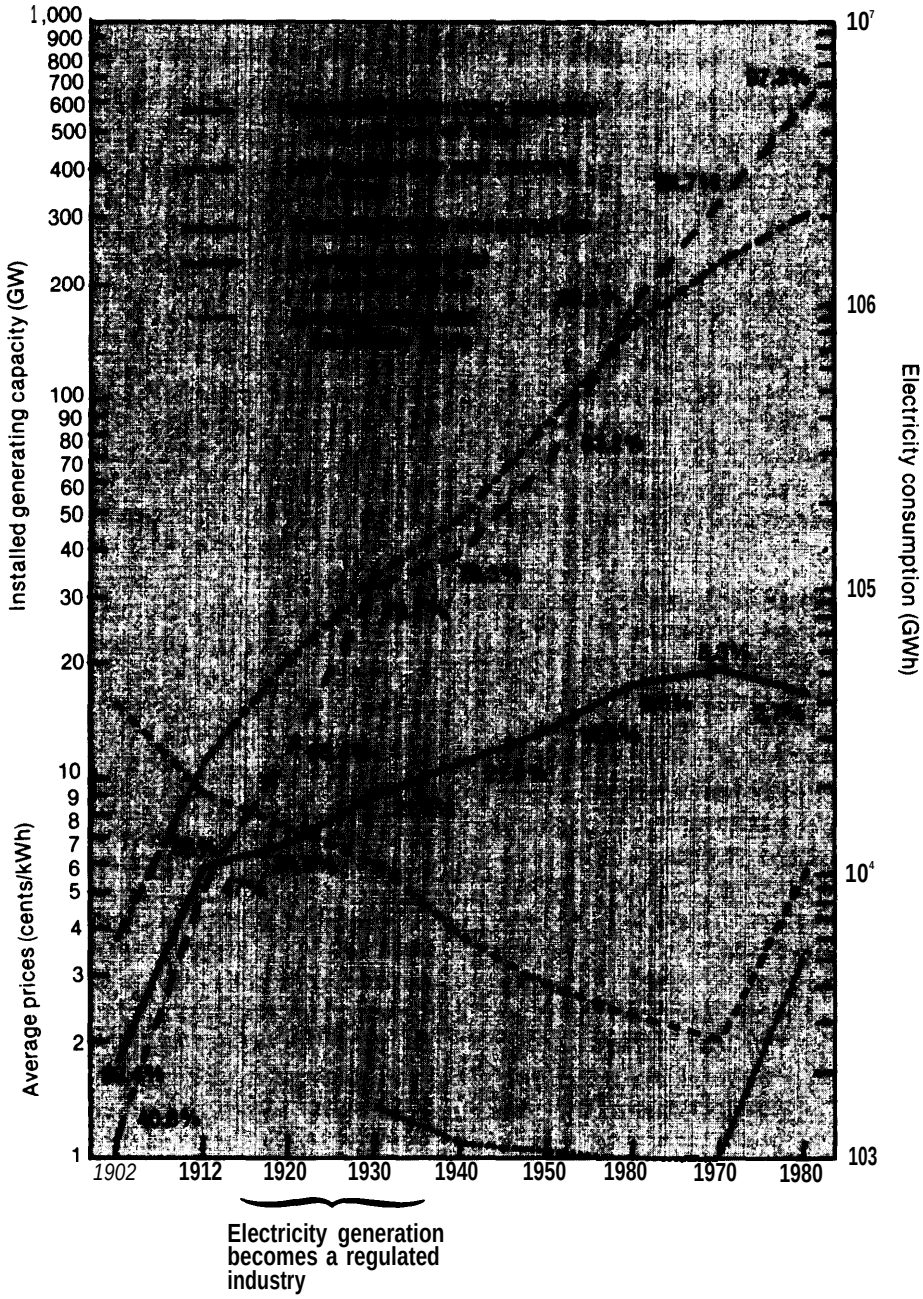

SOURCE: Office of Technology Assessment from Edison Electric Institute, **Statistical** *Yearbook of the Electric* **Utility Industry: 1980(Washington, D.C.: Edison Electric Institute, 1961); Historical** *Statistics of the United States, Co.-Ionial Times to* **1970:** *Part* **2 (Washington, D.C.: U.S. Government Printing Off Ice, 1976).**

high interest costs currently associated with financing large powerplants. The small size of cogeneration systems also may be attractive as a form of insurance against short-term fluctuations in electricity demand growth (in lieu of the costly overbuilding of central station powerplants). However, if cogenerators are not designed and sited carefully, and if their operation is not coordinated with that of the electric utilities, they also have the potential to increase oil consumption, contribute to air quality problems in urban areas, and increase the cost of electric power.

Congress has expressed considerable interest in decentralized energy systems and in cogeneration. Cogeneration is a major issue in the National Energy Act of 1978, parts of which were designed to remove existing regulatory and institutional ob stacles to cogeneration and to provide economic incentives for its implementation. In addition, the House Energy and Commerce Committee, the House Science and Technology Committee, and the Senate Energy and Natural Resources Committee have held hearings on cogeneration, and several committees in both Houses of Congress have held hearings on the general concept of decentralized energy systems.

The House Committee on Banking, Finance, and Urban Affairs requested that OTA undertake a study of small electricity-generating equipment. The request expressed concern that "considerations of energy policy have not taken adequately into account the possibilities for decentralizing part of America's electrical generating capabilities by distributing them within urban and other communities." Citing the financial problems currently faced by electric utilities and the availability of a wide range of new generating technologies, the committee requested "a careful examination of the role that small generating equipment could play and the economic, environmental, social, political, and institutional prerequisites and implications of greater utilization of such equipmerit." In 1981, the House Energy and Commerce, and Science and Technology Committees wrote letters to OTA reaffirming congressional interest in a study that would provide a better understanding of the economic, regulatory, and institutional barriers to the development of cogeneration and small power production by utilities, industries, and businesses.

In response to these requests, OTA undertook this assessment of cogeneration technologies. The assessment was designed to answer four general questions:

1. Under what circumstances are cogeneration technologies likely to be economically attractive and on what scale, and what is the potential for new technologies in the future?
2. How much electric power is economically or technically feasible for cogeneration to contribute to the Nation's energy supply?
3. What are the economic, environmental, social, and institutional impacts of cogeneration?
4. What policy measures would accelerate or retard the use of cogeneration systems?

In order to answer these questions, this report reviews the features of the Nation's energy picture (e.g., supply of and demand for fuels and electricity) and of the electric power industry that may affect decisions to invest in cogeneration systems; describes the major technologies suitable for cogeneration applications; analyzes the impacts of industrial and commercial cogeneration on utility planning and operations, on fuel use, and on environmental quality; and discusses the policy issues arising from existing legislation or regulations related to cogeneration. Because electric utilities are most likely to be affected strongly by onsite generation, the technical, institutional, and policy analyses focus on the role of utilities in such generation, and its effects on their future planning and operations.

The main focus of the report is the use of cogeneration equipment in the industrial and commercial sectors; promising rural applications are discussed briefly. The cogeneration technologies addressed in detail include steam and combustion turbine topping cycle equipment as well as combined-cycle systems, diesel topping cycles, Rankine bottoming cycles, Stirling engines, and fuel cells. Other small power production technologies (wind, solar electric, small-scale hydro) originally were included in the scope of this study. However, OTA found that reliable data on

these technologies' potential to produce electricity are not yet available. Moreover, the inclusion of four separate types of technologies made the scope of the study too broad. Therefore, analysis of these small power production systems has been reserved for a subsequent OTA assessment of electricity supply and demand in general.

Volume I of this report is organized as follows:

- chapter 2 highlights the central issues surrounding cogeneration and summarizes OTA'S findings on those issues;
- chapter 3 reviews the context in which cogenerators will operate, including the national energy situation, current electric utility operations, and the regulation and financing of cogeneration systems;
- chapter 4 presents an overview of the cogeneration technologies, including their operating and fuel use characteristics, projected costs, and requirements for interconnection with the utility grid;
- chapters analyzes the opportunities for cogeneration in industry, commercial buildings, and rural areas;
- chapter 6 assesses the impacts of cogeneration on electric utilities' planning and operations and on the environment, as well as on general economic and institutional factors such as capital requirements, employment, and the decentralization of energy supply; and
- chapter 7 discusses policy considerations for the use of cogeneration technologies.

The appendices to volume I include a description of the model used to analyze commercial cogeneration (ch. 5) and of the methods used to calculate emissions balances for the air quality analysis in chapter *6,* as well as a glossary of terms and a list of abbreviations used in the report. Selected reports by contractors in support of OTA'S assessment are presented in volume II.

COGENERATION TECHNOLOGIES

The principal technical advantage of cogeneration systems is their ability to improve the efficiency of fuel use. A cogeneration facility, in producing both electric and thermal energy, usually consumes more fuel than is required to produce either form of energy alone. However, the total fuel required to produce both electric and thermal energy in a cogeneration system is less than the total fuel required to produce the same amount of power and heat in separate systems. Relative efficiencies are portrayed graphically in figure 2 for an oil-fired steam electric plant, an oil burning process steam system, and an oil-fired steam turbine cogenerator with a high-pressure boiler. It should be noted, that despite its relative efficiency in fuel use, the fuel saved in cogeneration will not always be oil. Only if a cogenerator replaces separate technologies that burn oil and would continue to do so for most of the useful life of the cogenerator, will the fuel saved with cogeneration be oil.

A wide range of technologies can be used to cogenerate electric and thermal energy. Commercially available technologies are steam turbines, open-cycle combustion turbines, combined-cycle systems, diesels, and steam Rankine bottoming cycles. Advanced technologies that may become commercially available within the nexts to 1s years include closed-cycle combustion turbines, organic Rankine bottoming cycles, fuel cells, and Stirling engines. Solar cogenerators (e.g., the therm ionic topping system) also are under development, but are not discussed in this report.

Cogeneration technologies are classified either as "topping" or "bottoming" systems, depending on whether electric or thermal energy is produced first. in a topping system–the most common cogeneration mode—electricity is produced first, and then the remaining thermal energy is used for such purposes as industrial processes, space heating and cooling, water heating, or even the production of more electricity. Topping systems would form the basis for residential/commercial, rural/agricultural, and most industrial cogeneration applications. In a bottoming system,

Figure 2.—Conventionai Eiectricai and Process Steam System Compared With a Cogeneratlon System

(A) Conventional electrical generating system requires the equivalent of 1 barrel of oil to Produce 800 kWh electricity

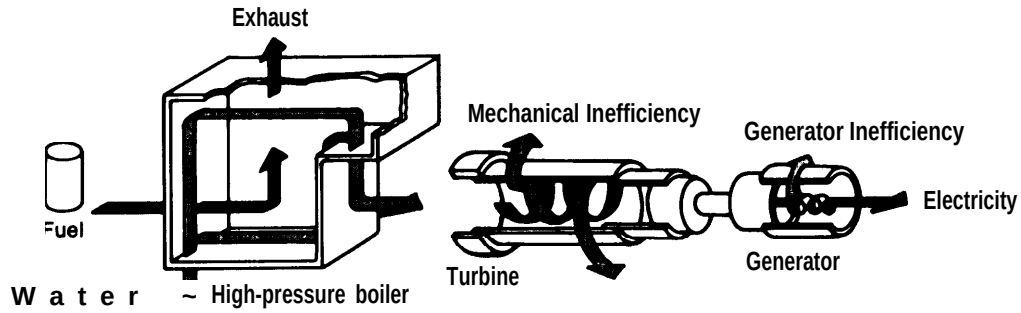

(B) Conventional process-steam system requires the equivalent of 2 $^{1}/_{4}$% barrels of oil to produce 8,500 lb of prooess steam

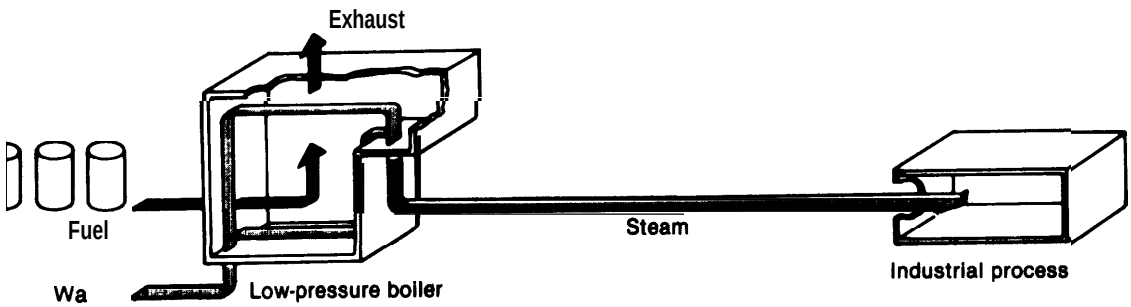

(C) Cogeneration system requires the equivalent of 2 3/4% barrels of oil to generate the same amount of energy as systems A and B

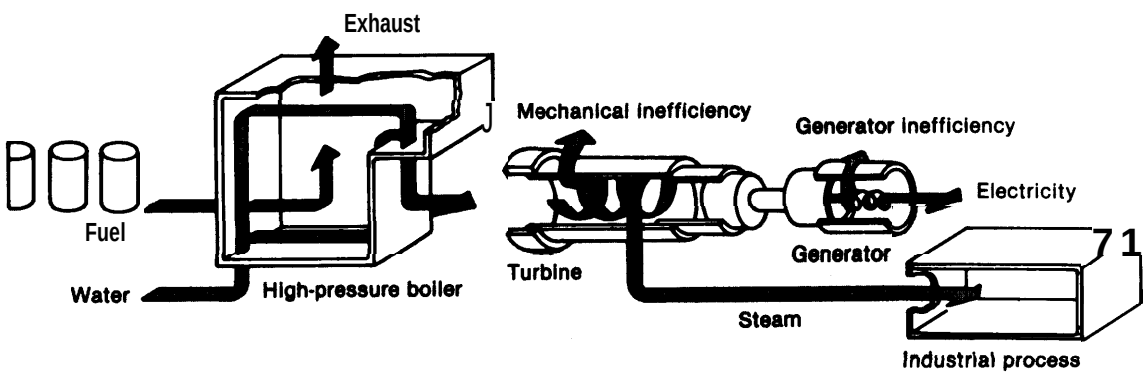

SOURCE: Resource Planning Associates, *Cogerreration.' Techn/ca/ Concepts, Trends, Prospects* (Washington, D. C.: U.S. Department of Energy, DOE-FFU-1703, 1978).

high-temperature thermal energy is produced first for applications such as steel reheat furnaces, glass kilns, or aluminum remelt furnaces. Heat is extracted from the hot exhaust waste stream and transferred to a fluid (generally through a waste heat recovery boiler), which is then vaporized by the waste heat to drive a turbine that produces electricity. The primary advantage of bottoming cycles is that they produce electricity with waste heat (i.e., no fuel is consumed beyond that needed in the industrial process), but their use is limited to industries that need high-temperature heat.

Cogeneration technologies vary widely in their cost, energy output, efficiency, and other characteristics (see table 1). The choice of cogeneration equipment for a particular application will depend on a number of considerations, including:

- *Thermal* energy needs: How much heat/ steam is needed onsite and at what temperature and pressure?
- Electric energy needs: How much electricity is needed onsite and how much is to be distributed to the grid?
- *Operating characteristics:* Will the cogenerator be operating all the time or only at certain times of the day or year?
- *Physical site /imitations:* How much space is available for the cogenerator and its auxiliary equipment (e.g., fuel handling and storage)?
- *Air quality considerations:* What are the emission limitations onsite and can they be accommodated through pollution controls and stack height?
- *Fuel availabillty:* Which fuels are readily available, and will the cogenerator displace oil or some other fuel?
- *Energy costs:* What are the relative prices of fuels for cogeneration (primarily natural gas in the near term, but also coal, biomass, and synthetic fuels) and of retail electricity?
- *Capital availability and costs:* Will the cogenerator be able to find attractive financ-

Table I.—Summary of Cogeneration Technologies

Technology	Unit size	Fuels used (present/possibie in future)	Average annual availability (percent)	Full-load electric efficiency (percent)	Part-load (at 50% load) electric efficiency (percent)	Total heat rate (Btu/kWh)	Net heat rate (Btu/kWh)	Electricity-to-steam ratio (kWh/MMBtu)
A. Steam turbine topping	500 kW-100 MW	Natural gas, distillate, residual, coal, wood, solid waste/coal- or biomass-derived gases and liquids.	90-95	14-28	12-25	12,200-24,000	4,5006,000	30-75
B. Open-cycle gas turbine topping	100 kW-100 MW	Naturai gas, distillate, treatad residual/coal- or biomass-derived gases and liquids.	90-95	24-35	19-29	9,750-14,200	5,500-6,500	140-225
C. Ciosed-cycle gas turbine topping	500 kW-100 MW	Externally fired—can use most fuels.	90-95	30-35	30-35	9,750-11,400	5,400-6,500	150-230
D. Combined gas turbine/steem turbine topping	4 MW-1OO MW	Naturai gas, distillate, residual/coal- or biomass-derived gases and liquids,	77-65	34-40	25-30	8,000-10,000	5,000-6,000	175-320
E. Diesel topping	75 kW-30 MW	Natural gas, distillate, treated residual/coal- or biomass-derived gases and liquids, slurry or powdered coals.	60-90	33-40	32-39	8,300-10,300	6,000-7,500	350-700
F. Rankine cycle bottoming:								
Steam	500 kW-10 MW	Waste heat.	90	10-20	Comparable to full load	17,000-34,100	NA	NA
Organic	2 kW-2 MW	Waste heat.	60-90	10-20	Comparable to full load	17,000-34,100	NA	NA
G. Fuel cell topping	40 kW-25 MW	Hydrogen, distillate/coal.	90-92	37-45	37-45	7,500-9,300	4,300-5,500	240-300
H, Stirling engine topping	3-100 kW (expect 1.5 MW by 1990)	Externally fired—can use most fuels.	Not known—expected to be similar to gas turbines and diesels.	35-41	34-40	8,300-9,750	5,500-6,5C4J	340-500

Table 1 .—Summary of Cogeneration Technologies-continued

Technology	Total installed cost ($/kW)[a]	Operation and maintenance cost: Annual fixed cost ($/kW)	Operation and maintenance cost: Variable cost (millions/kWh)	Construction leadtime (Years)[b]	Expected lifetime (years)	Commercial status	Cogeneration applicabiiity
A. Steam turbine topping	550-1,600	1,6-11.5	3.0-8.8	1-3	25-35	Mature technology —commercially available in large quantities.	This is the most commonly used cogeneratlon technology. Generally used in industry and utility applications. Best suited for where electric/thermal ratio is low.
B. Open-cycle gas turbine topping	320-700	0.29-0.34	2.5-3.0	0.75-2	20 natural gas 15 distillate	Mature technology —commercially available in large quantities.	Potential for use in residential, commercial, and industrial sectors if fuel is available and cost effective.
C. Closed-cycle gas turbine topping	450-900	5 percent of acquisition cost per year	Included in fixed cost	2-5	20	Not commercial In the United States; is well developed in several European countries.	Best suited to larger scale utility and Industrial applications. Potential for coal use is excellent.
D. Combined gas turbine/steam turbine topping	430-800	5.0-5.5	3.0-5.1	2-3	15-25	Commercially available; advanced systems by 1985.	Most attractive where power requirements are high and process heat requirements are lower, Used in large industrial applications such as steel, chemical, and petroleum refining industries.
E. Diesel topping	350-800	6.0-8.0	5.0-10.0	0.75-2.5	15-25	Mature technology —commercially available in large quantities.	Reliable and available, can be used in hospitals, apartment complexes, shopping centers, hotels, industrial centers if fuel is available and cost effective, and if can meet environmental requirements,
F. Rankine cycle bottoming: Steam	550-1,100	1,6	3.7-6.9	1-3	20	Commercially available.	Industrial and utility use almost exclusively. Although efficiency is low, since it runs on waste heat no additional fuel is consumed. Can reduce overall fuel use.
Organic	800-1,500	2.8	4,9-7.5	1-2	20	Some units are commercially available but technology is still in its infancy.	Same benefits/limitations as steam Rankine bottoming except that it can use lower-grade waste heat. Organic Rankine bottoming is one of the few engines that can use waste heat in the 200° 600°F range,
G. Fuel cell topping	520-840C	0.26-3,3	1.0-3.0	1-2	10-15	Still in development and experimental stage. phosphoric acid expected by 1985, moiten carbonate by 1990.	Modular nature, low emissions, excellent part-load characteristics allow for utility load foliowing as well as applications in commercial and industrial sectors.
H. Stirling engine topping	420-960[c]	5.0	8.0	2-5	20	Reasonably mature technology up to 100-kW capacity but not readily available. Larger sizes being developed.	High efficiency and fuel flexibility contribute to a large range of applications. Couid be used in residential, commercial, and industrial applications. Industrial use depends on development of large Stirling engines,

"NA" means not applicable.
[a]1980 dollars,
[b]Depends on system size and heat source.
[c]Cost estimates assume successful development and Commercial scaie production, and are not guaranteed,

SOURCE: Office of Technology Assessment from material in ch. 4,

ing, or will investments in process improvements have priority for available capital?

At present, significant uncertainties about the types of cogeneration technologies that will be installed and their location, costs, and operating characteristics, and about general financial and economic conditions make it difficult to analyze the market potential for cogeneration or its impacts on electric utilities, fuel use, and the environment. However, general trends in the national energy, electric utility, and policy context in which cogenerators would be deployed can be discerned, and analyses of these trends can be used to evaluate existing policy incentives.

THE POTENTIAL FOR COGENERATION

Cogeneration could have a very large technical potential in the United States–perhaps as much as 200 gigawatts (GW) of electrical capacity by 2000 in the industrial sector alone, with a much lower potential (3 to 5 GW) in the commercial, residential, and agricultural sectors. (Total U.S. installed generating capacity in 1980 was approximately 619 GW.) However, cogeneration's market potential (the amount of cogeneration capacity that might be considered sufficiently economic for an investment to be made) will be much smaller than this for several reasons.

First, cogeneration investments will have to compete with conservation in industries and buildings. Conservation investments usually are less costly than cogeneration and have a shorter payback period, and thus are likely to receive priority over cogeneration in most cases. As a result of conservation measures, thermal energy demand is likely to grow much more slowly than it has in the past (some sources project a zero or negative rate of growth in industrial thermal demand through 2000), and could present a declining opportunity for cogeneration.

In addition, cogeneration will compete in the long term (beyond 1990) with electricity supplied by coal, nuclear, hydroelectric, and other types of alternate-fueled electric utility generating capacity. Some cogeneration applications may not be economically competitive where utilities have relatively low retail electricity rates or are planning to replace existing powerplants with ones that will generate electricity more economically (e.g., replacing intermediate-load oil-fired generators with baseload coal plants).

Cogeneration's market potential also will be limited by the inability of most technologies—especially smaller scale systems—to use fuels other than oil or natural gas. At present, only steam turbine cogenerators can accommodate solid fuels. Advanced technologies now under development will have greater fuel flexibility, as well as better fuel efficiency and lower emissions. In addition, advanced fuel combustion or conversion systems such as fluidized beds and gasifiers can be used to improve the fuel flexibility of existing cogeneration technologies. More development is needed, however, to make these technologies commercially attractive, and they are not likely to contribute significantly for 5 to 10 years.

Cogeneration's ability to supply electricity to the utility grid also will affect its market potential. Under the Public Utility Regulatory Policies Act of 1978 (PURPA), economic and regulatory incentives are offered to cogenerated power that reduces utility costs for capacity, energy, or transmission and distribution, or that contributes to power supply or load reduction during daily or seasonal peak demands. These incentives are reflected in the price that utilities must pay for power purchased from a cogenerator, which is determined by a utility's incremental costs, or the costs avoided in not generating and distributing the power itself or purchasing bulk power from the grid. In many parts of the country, shortrun avoided energy costs will be based on the price the utility pays for oil or natural gas, and capacity costs on the operating cost of a peakload powerplant (e.g., a combustion turbine). In these cases, the greater efficiency of cogeneration systems—even those burning distillate oil or natural gas–often can make cogeneration the economically preferable means of generating electricity. However, if the utility relies primarily on coal or nuclear fuel and has excess capacity, then the

shortrun avoided energy cost (determined by offsetting coal or nuclear fuel) would be much lower and there may be no shortrun avoided capacity cost. In these cases, shortrun avoided cost payments may not be sufficient to make cogeneration an attractive investment. Longrun avoided costs would be based on a utility's resource plan, and would raise the issue noted above of competition with coal and other non premium fuels.

Furthermore, the choice of technology will affect a cogenerator's ability to supply power to the grid. In general, technologies with a high ratio of electricity-to-steam production (E/S ratio) will be favored when onsite electric power needs are large or when power is to be exported offsite; these include diesels, combustion turbines, and combined-cycle systems. At present, however, the high E/S ratio systems can only burn oil or natural gas. Steam turbines, the only commercially available technology that can burn solid fuels directly, have a relatively low E/S ratio. For example, a large industrial installation that uses 500,000 lb/hr of steam would cogenerate 30 to 40 MW of electricity with steam turbines, and 120 to 150 MW with combustion turbines. Therefore, where onsite electricity needs are high, or the project's economic feasibility depends on supplying electricity to the grid, a technology with a higher E/S ratio (e.g combustion turbines, diesels, combined cycles) would be favored, but could not use fuels other than oil/gas in the short term.

COGENERATION OPPORTUNITIES

Although the factors discussed above make cogeneration's overall market potential highly uncertain, it is possible to identify promising cogeneration opportunities in the industrial and commercial sectors and in rural areas.

Industrial Cogeneration

Today, industrial cogeneration has an estimated installed capacity of 14,858 MW (see table 2). * An additional 3,300 MW is reported to be in the planning stages or under construction. The largest number of industrial cogenerators are in the pulp and paper industry, which has large amounts of burnable wastes (process wastes, bark, scraps, and forestry residues unsuitable for pulp) that can be used to fuel cogenerators. For at least two decades this industry has considered electricity generation to be an integral part of its production process and new pulp and paper plants are likely candidates for cogeneration.

The chemical industry uses about as much steam annually as the pulp and paper industry and historically has ranked third in industrial cogeneration capacity. Chemical plants also will represent a promising source of new cogenerators. Conservation opportunities, however, will strongly dampen growth in steam demand if not cause it to decline.

Another major cogenerator is the steel industry, because the off-gases from the open-hearth steelmaking process provide a ready source of fuel to produce steam for driving blast furnace air compressors and other uses. But new cogener-

*A more recent estimate arrives at a total of about 9,100 MW (5). No breakdown by SIC code is given, however, but we assume the distribution would be similar to that given in table 2.

Table 2.–installed Industrial Cogeneration Capacity

Sector (SIC code)	Capacity (MW)	Capacity (percent)	Number of plants	Plants (percent)
Food (20)	398	3	42	11
Pulp and paper (26)	4,246	29	136	37
Chemicals (28)	3,438	23	62	17
Petroleum refining (29)	1,244	8	24	6
Primary metals (33)	3,589	24	39	11
Other	1,943	13	68	18
Total	14,858		371	

SOURCE: General Energy Associates, *Industrial Cogeneration Potential: Targeting of Opportunities at the Plant Site* (Waahington, D. C.: U.S. Department of Energy, 1982).

ation capacity is not likely to be installed in this industry because new steel mills probably will be minimills that use electric arcs and have little or no thermal demand. However, if a market for the thermal output could be found, an electric arc minim ill could use the cogenerated electricity and sell the heat/steam.

petroleum refining also is well suited to cogeneration, but significant new refinery capacity is not expected to be built in the near future, except in connection with heavy oil recovery in California. However, some cogeneration capacity could be installed when existing refineries are upgraded.

Finally, the food processing industry currently has a small amount of cogeneration capacity which could more than double by 1990. Here the primary limit on the cogeneration potential is the low thermal load factor that results from the seasonal nature of the steam demand.

Commercial Building Cogeneration

Cogeneration in commercial buildings has a much smaller potential for growth than industrial cogeneration, primarily due to the low thermal load factors in those buildings. Additional constraints on commercial building cogeneration opportunities include the difficulty of handling and storing solid fuels (coal, biomass) in and around buildings; competition with conservation for energy investment funds, and with coal or other baseload capacity additions for economic electricity generation; and the special air quality considerations in urban areas.

The disadvantages presented by the low thermal load factors in commercial buildings can be overcome to some extent by undersizing the cogenerator and operating it at a high capacity factor to meet the baseload thermal needs, and using conventional thermal conversion systems to supplement the cogenerator's output. Alternatively, several buildings could share a cogenerator and use the diversity in their energy demand to improve the thermal load factor.

Moreover, commercial building cogeneration fueled with natural gas may have a promising market in the near term (up to 1990), especially where rates for utility purchases of cogenerated power are based on the price of oil-fired electricity generation and utilities have substantial amounts of oil burning capacity. In these cases, cogeneration can allow rapid development of capacity to meet new electricity demand and/or reduce utility oil use. However, as noted previously, in the long term, cogeneration will have to compete economically with coal and other alternate-fueled utility capacity.

The probable low market penetration of commercial sector cogeneration means that it usually will have a low potential for displacing the fuel used by utility generating capacity. However, where electricity prices are high or utility capacity additions are limited, cogeneration may have a greater market potential and could displace utility intermediate oil or gas capacity. If both the cogenerator and the capacity it displaces use oil, the result usually would be a decrease in utility use of residual fuel oil and a corresponding increase in distillate use by commercial cogenerators, but an overall reduction in total oil use. Relatively small systems with good part-load characteristics (e.g., diesels and spark-ignition engines) are likely to be favored in urban residential/commercial applications where there are physical site limitations and low capacity factors, and these systems are limited to the use of oil or natural gas in the near term.

In summary, OTA found that commercial building cogeneration would be economically attractive where there is a moderate rate of growth in electricity demand (2 percent or more annually), where electric utilities are caught in a capacity shortfall, or where the utility has a high percentage of oil-fired capacity; where there is a high heating demand (about 6,000 heating degree days per year); and where cogenerators can use a fuel that is significantly less costly than oil. However, even if these advantages are available, cogeneration's competitiveness in the commercial sector will be subject to the same limiting factors as in the industrial sector—competition with conservation measures that have a lower capital cost and shorter payback period, the ability to supply significant amounts of power to the grid, and economic and regulatory uncertainties.

Rural Cogeneration Opportunities

Rural cogeneration opportunities arise where there are existing small community powerplants that could recover and market their waste heat, and/or where alternate fuels (such as biomass) are readily available. Promising rural cogeneration applications include producing ethanol, drying crops or wood, and heating greenhouses, animal shelters, or homes.

A large number of small rural powerplants are standing idle due to the high cost of premium fuels. Generally these are dual-fuel engines burning natural gas plus small amounts of fuel oil to facilitate combustion; diesel engines and natural-gas-fueled spark-ignition engines are also common. The waste heat from these engines could be recovered and use directly (in the case of natural-gas-fired systems) or used in heat exchangers to provide hot water or steam. If only half of the waste heat were used, a powerplant's energy output would double, providing a new revenue stream for the community and enabling the engines to be operated economically. These potential benefits would be weighed against the cost of installing and operating the heat recovery system.

However, cogeneration at an existing rural powerplant could increase oil use if it is substituted for grid-supplied electricity generated with alternate fuels. Therefore, rural communities should focus on technologies that can use locally available biomass fuels such as crop residues, wood, and animal wastes. Gasifiers that convert crop residues or wood to low- or medium-Btu gas can be connected with internal combustion engines, although the engines will need some modification for trouble-free operation over long periods of time. Such gasifiers are commercially available in Europe and are being demonstrated in the United States. Anaerobic digestion of animal wastes from confined livestock operations also could be used to produce biogas (a mixture of 40 percent carbon dioxide and 60 percent methane) to fuel an internal combustion engine. Anaerobic digestion has the advantages of solving a waste disposal problem, while producing not only biogas but also an effluent that can be used directly as a soil conditioner, dried and used as animal bedding, or possibly treated and used as livestock feed. Digesters for use in cattle, hog, dairy, and poultry operations are commercially available in the United States and are being demonstrated at several rural sites. Wastes from rural-based industries, such as whey from cheese plants, also are being used as a feedstock for farm-based digesters.

Cogeneration can have significant economic and fuel savings advantages in rural communities and on farms. The rural cogeneration potential is not so large as that in industrial and urban applications, but the advantages can be very important in allowing significant local economic expansion—from new jobs and from increased revenues due to steam/heat sales—by using local resources without increasing the base demand for energy.

INTERCONNECTION REQUIREMENTS

The economic and other incentives offered to cogeneration under PURPA assume that cogenerators will be interconnected with the electric utility grid. Such interconnections may require special measures to maintain power quality, to control utility system operations, to protect the safety of lineworkers, and to meter cogenerators' power production and consumption properly. OTA found that most of the technical aspects of interconnection are well understood, and the primary issues related to interconnection are the lack of uniform guidelines and the cost of the equipment.

The characteristics of cogenerated electricity that is distributed to the grid must be within certain tolerances so that utilities' and customers' equipment will function properly and not be damaged. Thus, grid-connected cogenerators may need capacitors to keep voltage and current in phase; over/under relays to disconnect the generator automatically if its voltage goes outside a

certain range; and a dedicated distribution transformer to isolate voltage flicker problems. Because the power quality impacts of cogenerators are technology- and/or site-specific, not all systems will need all of this equipment. In particular, very small cogenerators (under 20 kW) may have few or no adverse effects on grid power quality and may not require any extra interconnection equipment. Moreover, larger systems probably will already have dedicated transformers, and may only need power factor correcting capacitors if they use induction (as opposed to synchronous) generators.

Proper interconnection is necessary to ensure the safety of utility workers during repairs to transmission and distribution lines. First, cogenerators should locate their disconnect switches in specified areas in order to simplify lineworkers' disconnect procedures. In addition, induction generators (and, very occasionally, synchronous generators) must use voltage and frequency relays and automatic disconnect circuit breakers to protect against self-excitation of the generator. Alternatively, the power factor correcting capacitors can be located where they will be disconnected along with the cogenerator (and thus prevent self-excitation) or where they can be isolated easily by lineworkers.

Large numbers of grid-connected cogenerators that are dispatched by the electric utility may require expensive telemetry equipment and could overload utility system dispatch capabilities. However, these problems can be avoided if utilities treat cogenerators as "negative loads" by subtracting the power produced by the generators from total system demand and then dispatching the central generating capacity to meet the reduced load. Most utilities currently use negative load scheduling with cogenerators (and small power producers), and some studies indicate that it may work well even with large numbers of cogenerators. However, some utilities question whether the system would continue to function properly if a significant percentage of total system capacity were undispatched cogenerators being treated as negative loads. Additional research is needed to determine whether undispatched cogenerators will cause problems for a utility system and, if so, at what degree of system penetration such problems would arise.

Finally, cogenerators' power production and consumption must be metered accurately in order to provide better data on their output characteristics (and thus facilitate utility system planning), and to ensure proper pricing for buyback and backup power. Cogenerators can be metered inexpensively with two standard watt-hour meters—one operating normally to measure consumption and the other running backwards to indicate production. Alternatively, advanced meters can be installed that indicate not only kilowatthours used/produced but also power factor correction and time-of-use. These advanced meters provide better data about cogeneration's contribution to utility system loads, and they facilitate accurate accounting (and thus pricing) of power purchased and sold. However, advanced meters also cost about five times more than two standard watt-hour meters.

Estimates of the cost for interconnection vary widely—from $12/kW for a large cogenerator to $1 ,300/kw for a small system—depending on the generator type, the system size, the amount of equipment already in place, and a particular utility's or State public service commission's requirements for equipment type and quality. In general, interconnection costs will be higher if a dedicated transformer is needed. Economies of scale also are apparent for circuit breakers, transformers, and installation costs. Moreover, some utilities or commissions may require more equipment than described above in order to provide extra protection for their system and the other customers. The quality of the interconnection equipment required also may affect costs substantially. Some utilities allow smaller cogenerators to use lower quality and less expensive industrial-grade equipment, but the size cutoff varies widely among utilities—from 200 to 1,000 kW. In other areas, all cogenerators are required to use the higher quality utility-grade equipment, but with such equipment the cost of interconnection may be prohibitive for small cogenerators. Few guidelines exist for the type and quality of interconnection equipment necessary for cogenerators, but several are under preparation. Once standard guidelines are available, interconnection costs should become more certain.

IMPACTS OF COGENERATION

Cogeneration has the potential for both beneficial and adverse effects on fuel use, utility planning and operations, and the environment. In each case, OTA found that the potential negative impacts could be mitigated substantially if the cogeneration technology is carefully selected and sited, if the cogenerator works closely with the utility throughout the project's planning and implementation, and if the cogeneration system is carefully integrated with existing and planned future energy supplies.

Effects on Fuel Use

All cogenerators will save fuel because they produce electric and thermal energy more efficiently than the separate conversion technologies they will displace (e.g., an electric utility powerplant and an industrial boiler). Whether cogeneration will save oil depends on the fuel used by a cogenerator and the fuels used in the separate systems that are displaced. If both of the separate technologies burn oil and would continue to do so for most of the useful life of the cogenerator that supplants them, then even an oil burning cogenerator will reduce total oil consumption. However, if either or both of the separate conventional technologies use an alternate fuel (e.g., coal, nuclear, hydroelectric, biomass, solar), or would be converted to an alternate fuel during the useful life of a cogenerator, then oil-fired cogeneration would increase total system oil use.

Where oil savings are available through cogeneration, their magnitude will depend on the type of cogenerator and the types of separate conversion technologies that are displaced, as well as on the rates for purchases of cogenerated power under PURPA. For example, an oil-fired steam turbine cogenerator could reduce oil use by 15 percent if it is substituted for an oil-fueled steam electric powerplant and separate low-pressure steam boiler, while a diesel cogenerator that recovers three-quarters of the potentially usable heat could represent a 25 percent savings if it replaces a diesel electric generator and separate oil burning furnace. (Much greater savings are available if an alternate-fueled cogenerator replaces separate oil-fired systems.)

Higher rates for utility purchases of cogenerated power will favor technologies with high E/S ratios, thus increasing the potential to displace utility generating capacity, much of which will be intermediate and peakload plants that burn oil. However, because currently available high E/S cogenerators also are limited to the use of oil (or natural gas), care must be exercised in deploying these technologies if it is important to ensure that oil savings are achieved over the useful life of the cogenerator. In many cases, the market (high prices and uncertain availability), regulatory provisions, tax measures, and the utility's avoided costs will provide such insurance.

Impacts on Utility Planning and Operations

Cogeneration can offer significant economic savings for utilities that need to add new capacity. Where utilities need to displace oil-fired capacity or accommodate demand growth, cogeneration can bean attractive alternative to conventional powerplants. Cogenerators' relatively small unit size and short construction leadtime can provide more flexibility than large baseload plants for utilities in adjusting to unexpected changes in demand, and cogeneration is a more cost-effective form of insurance against such changes than the overbuilding of central station capacity. Cogeneration also has the potential to significantly reduce interest costs during construction (and thus the overall cost of providing electricity).

Relying on cogeneration capacity instead of conventional powerplants should not pose significant operating problems for utilities if the cogenerators are properly connected to the grid. As discussed previously, large numbers of small grid-connected cogenerators should not overburden utility system dispatch capabilities if they are treated as negative loads, but the effects of a substantial penetration of a system are uncertain.

However, expansion of cogeneration could have a substantial adverse economic impact on utilities that have excess capacity and/or a low rate of growth in demand. If large industrial and commercial sites drop out of a utility's load, then the utility's fixed costs must be shared among fewer customers, who would then have higher electric rates. This competition has been observed in other regulated industries (e.g., telecommunications, railroads). The effects of such competition are essentially the same as those of the competition from conservation measures or of the excess capacity that can result from oil displacement.

Where utilities already have excess capacity or are committed to major construction programs that cannot be deferred, the risk of reduced fixed cost coverage can be acute. In the long run, such competition could represent a benefit for most utilities by reducing the need for new capacity and thus relieving financial pressures on utilities and lowering rate levels. But until the construction budget is adjusted, the short-term effects of revenue losses could be severe for some utilities and their remaining customers.

Furthermore, if utilities purchase power from cogenerators based on the utility's full avoided cost, the utility's non-cogenerating customers may not receive any economic benefit from cogeneration. Cogenerators usually will be installed only where their operating costs would be less than the avoided cost rate paid by the utility for their power. If the cogenerator receives the full difference, the ratepayer will receive no direct benefit. This situation is exacerbated if the avoided cost payments are higher than the utility's actual short-run marginal cost (e.g., if the State regulatory commission bases avoided costs on the price of oil and the utility operates with a mix of fuels, or if the commission establishes a high avoided cost as an explicit subsidy to encourage cogeneration). A payment to cogenerators of less than the utility's full avoided cost, with the difference going toward rate reduction, would share any cost benefits of cogeneration with the utility's other ratepayers.

One solution to both the competition posed by cogeneration and the rate reduction issue is for utilities to own cogenerators. ownership could be advantageous to a utility because the cogenerator would be included in the utility's rate base and thus the utility would earn a percentage return on the equipment. Where cogeneration is economically competitive with other types of capacity additions, utilities should be investing in it. However, cogeneration systems that are more than 50 percent utility-owned are not eligible for the economic and regulatory incentives established under PURPA, which often determine economic competitiveness. If full utility ownership were allowed incentives under PURPA, cogeneration's market potential probably would increase, as would the amount of electricity it would supply to the grid (because utilities would be more likely to install high E/S ratio technologies). In addition, utility investment in cogeneration would have the economic advantages related to the small unit size and shorter construction leadtimes discussed previously, and could result in lower electricity rates compared to conventional capacity additions. However, full utility ownership under PURPA raises a number of concerns about possible anti-competitive effects and about the resulting profits to utilities; these are discussed in more detail under "Policy Considerations," below.

Environmental Impacts

The primary environmental concern about cogeneration is the public health effects of changes in air quality. Cogeneration will not automatically offer air quality improvement or degradation compared to the separate conversion technologies it will replace. Cogeneration's greater fuel efficiency may lead to either a decrease or an increase in the total emissions associated with electric and thermal energy production, depending on the types of combustion equipment, their scale, and fuel used. Similarly, cogeneration may improve or degrade air quality by shifting emissions away from a few central powerplants with tall stacks to many dispersed facilities with shorter stacks, depending on the variables listed above as well as on the location of the cogenerators and the separate systems they replace.

Of the available cogeneration technologies, diesel and gas-fired spark-ignition engines have

the greatest potential for adverse air quality impacts due to their high–but usually controllable–nitrogen oxide emissions. Diesels also emit potentially toxic particulate, but clear medical evidence of a human health hazard is lacking at this time. Steam and gas turbines should not result in an increase in total emissions unless they use a "dirtier" fuel than the separate conversion technologies they replace (e.g., a shift from distillate oil to high sulfur coal), or where a new turbine cogenerator that primarily produces electricity is installed instead of a new boiler or furnace.

Adverse local air quality impacts are most likely to occur with cogeneration in urban areas, because urban cogenerators usually will be diesels or spark-ignition engines, because urban areas would have a higher total population exposure, and because tall buildings can interfere with pollutant dispersion. Moreover, the small systems that would be used in these applications tend to have high nitrogen oxide and particulate emissions. As a result of these considerations, urban cogenerators must be designed and sited carefully, including choosing an engine model with low emissions, applying technological emission controls, and ensuring that the exhaust stacks are taller than surrounding buildings.

Cogenerators' greater fuel efficiency also can lead to an important environmental benefit in other aspects of a fuel cycle (e.g., exploration, extraction, refining/processing) if a cogenerator uses the same fuel as the conventional energy systems it displaces. However, if a fuel that is difficult to extract, process, and transport (e.g., coal) is substituted for a "cleaner" fuel (such as natural gas), the overall impact may be adverse rather than beneficial.

Finally, cogeneration might affect water quality (from blowdown from boilers and wet cooling systems, and from runoff from coal piles and scrubber sludge and ash disposal), waste disposal (sludge and ash), noise, and materials (from cooling tower drift). All of these will be more likely to pose a problem in urban areas, and all are either controllable and/or are more likely to be a nuisance than a health hazard.

Socioeconomic Impacts

General trends for impacts on economic and social parameters such as capital investment, operating and maintenance (O&M) costs (excluding fuel costs), and labor requirements cannot be identified at this time due to the large uncertainties in future deployment patterns. These impacts will depend heavily on the size and type of cogenerators used, the size and type of separate conversion technologies that would be displaced, the regions in which cogeneration would be installed (construction costs and labor requirements generally are lower in the South), and cogenerators' operating characteristics. For example, in comparing cogeneration capital costs with those for conventional baseload and peakload capacity, OTA found that the cost of installing 100,000 MW of electric generating capacity under cogeneration scenarios varied from about 25 percent more to approximately 95 percent less than the cost of installing an equivalent amount of capacity under conventional central station scenarios, depending on the capacity mix and location for each scenario.

For purposes of comparison, OTA analyzed the mean values for capital and O&M costs, and for construction and O&M labor requirements, for 50,000, 100,000, and 150,000 MW of electricity-generating capacity with and without cogeneration. In this comparison, OTA found that mean capital costs for cogeneration tended to be around 20 to 40 percent lower than the mean costs for an equivalent amount of conventional utility capacity. Because cogenerators have a shorter construction leadtime than conventional powerplants, savings on interest charges during construction would increase this capital cost difference. The O&M cost differences were calculated for two different cogeneration capacity factors–45 and 90 percent. With a capacity factor of 90 percent, mean cogeneration O&M costs were higher (25 to 70 percent) than mean utility O&M costs, while cogenerators operating at a 45 percent capacity factor had mean O&M costs ranging from approximately 20 percent higher to roughly 35 percent lower than mean utility costs.

Construction and O&M labor requirements both tended to be higher for the cogeneration scenarios than for the central station capacity scenarios. Up to 50 percent more construction labor might be required for cogeneration than for utility capacity. The O&M labor requirements varied much more widely due to the lack of data and the pronounced economies of scale for cogeneration O&M labor.

In general, these results confirm reports in the literature that cogeneration could save investment capital while increasing direct employment in electricity supply. However, the actual economic and employment effects might be much different if the mix of technologies installed were different from those examined by OTA.

POLICY CONSIDERATIONS

The primary Federal policy initiatives that affect the deployment of cogeneration capacity include provisions of title II of PURPA, the Powerplant and Industrial Fuel Use Act of 1978 (FUA), the Clean Air Act, and the tax laws, as well as Government support for research and development. In general, the combined focus of these initiatives is to encourage grid-connected cogeneration that will use energy economically and utility resources efficiently. Although the long-term effects of these policies on cogeneration implementation are still uncertain (due to delays in State implementation and to ongoing changes in Federal priorities), a number of unresolved issues have been identified for possible further congressional action. These include the use of oil in cogeneration, the economic incentives for cogeneration, utility ownership of cogeneration capacity, requirements for interconnection with the grid, and the effects of cogenerators on local air quality.

Oil Savings

Despite their inherent energy efficiency, not all cogenerators will save oil. The purchase power rate provisions of PURPA, FUA prohibitions on oil use in powerplants and industrial boilers, and the energy tax credits discourage cogeneration applications that would increase oil use, but they may not be effective in all cases. For example, cogenerators with less than about 10-MW generating capacity or that sell less than half their annual electric output, are automatically exempt from FUA prohibitions. Similarly, an oil-fired cogenerator may not be entitled to rates for utility purchases of cogenerated power under PURPA that are as high as those paid to systems burning alternate fuels, but the installation could be economic without those payments (e.g., if retail electricity rates are very high). Moreover, an existing industrial or commercial oil burning energy system could be retrofitted for cogeneration and still qualify for the energy tax credit as long as onsite energy use is reduced.

In many cases, the uncertain price and long-term availability of oil, coupled with regulatory and economic disincentives to its use, will be sufficient to discourage oil-fired cogeneration. However, where oil-fired cogenerators still would be economic but would not provide lifetime oil savings, additional policy initiatives might be considered if net oil savings is the primary goal. These include amending FUA to prohibit the use of oil in all cogenerators regardless of size or electricity sales unless a net lifetime oil savings can be demonstrated; amending PURPA to deny qualifying facility status (and thus economic and regulatory incentives) to oil burning cogenerators unless net oil savings are shown; and amending the investment and energy tax credits and other tax code provisions to deny tax deductions, credits, or other measures for cogeneration projects unless net oil savings are demonstrated. However, these measures may only provide oil savings of less than 100,000 barrels per day in 1990. Moreover, net oil savings are difficult to prove, and these regulations could be expensive and time-consuming for both potential cogenerators and implementing agencies, and could discourage even those cogeneration systems that would save oil.

If net oil savings is the primary goal, there are several policy alternatives to additional layers of fuel use regulations. First, oil consumption could be taxed (e.g., with an oil import fee). Such a tax would encourage conservation in all oil markets and provide additional Federal revenues. Alternatively, restrictions in FUA and the tax laws on the use of natural gas in cogenerators might be eliminated. Natural gas for cogeneration is likely to be competitive with oil, and gas-fired cogenerators usually will be technically and economically attractive in the same situations as oil burning systems. Moreover, gas-fired cogeneration could provide a bridge to the development of gasification systems using alternative fuels. Thus, removing regulatory and tax restrictions on the use of natural gas in cogenerators would complement market disincentives to oil use, by presenting an economically attractive alternative in those situations where oil might otherwise be favored.

On the other hand, if gasification systems do not become commercial as soon as their developers project, or if the cost of producing low- or medium-Btu gas remains significantly higher than the cost of natural gas, then this strategy could lock cogenerators into natural gas use for 10 to 20 years. Moreover, if natural gas-fired cogeneration were given incorrect incentives, and made more attractive than market conditions would justify, this could discourage the use of non-premium fuels (e.g., coal, biomass, wastes) and add to the demand for natural gas. If supplies are limited, the cogenerators' demand could increase supply pressures for established gas users.

Economic Incentives for Cogeneration

Cogeneration's market potential (the amount of cogeneration capacity that may be installed and the amount of electricity that it will produce) is extremely sensitive to economic considerations. These include the rates for utility purchases of cogenerated power, tax credits and leasing provisions, and other policy measures that either reduce the capital cost or offset the operating cost of cogeneration systems. At present, however, the continued availability of existing policy initiatives is in doubt.

A recent court decision vacated the Federal Energy Regulatory Commission (FERC) regulations implementing PURPA that called for utility purchases of cogenerated power at rates equal to 100 percent of the incremental cost saved by the utility by not generating the power itself or purchasing it from the grid (termed the utility's "avoided cost"). The court held that FERC had not adequately justified rates based on the full avoided cost when a lower rate would still compensate most cogenerators adequately while sharing the economic benefits of cogeneration with the utility's ratepayers. In order for the ratepayers to share in any cost benefits of cogeneration, less than full avoided costs would have to be paid to the cogenerator, with the difference going to rate reductions, or the utility would have to own the cogenerator. The full avoided cost rates remain in effect pending final resolution in the case (including appeals and revision of the regulations, if necessary), but uncertainty about the long-term purchase rates is substantially discouraging cogeneration except in those cases where State legislatures or regulatory commissions have instituted full avoided cost rates on their own initiative.

A second source of uncertainty is the 1982 expiration date for the special energy tax credit. The availability of this credit often can make or break the economic feasibility of cogeneration projects (and other alternate energy systems). Due to the currently high interest rates and the promise of improved technologies now under development or demonstration, many potential cogenerators would prefer to wait several years before making their investment. The continued availability of the energy tax credit (perhaps through 1990) could help to ensure that those investments would be made, while an earlier expiration date might encourage the installation of less efficient existing technologies.

Finally, if the Government wanted to maximize cogeneration's market potential, then policies that substantially reduce capital costs might be implemented. With the current high interest rates, debt financing—the primary mode of financing for potential cogenerators—is unattractive or unavailable. Therefore, subsidies that lower interest rates and extend loan terms may be more attractive than tax credits.

Utility Ownership

Electric utility ownership could substantially increase cogeneration's market potential. Power production is electric utilities' primary business and they would thus not be subject to many of the qualms of industrial or commercial concerns that are unaccustomed to producing electric power or that place higher priorities on investments in process equipment. Some utilities may require a lower return on their investment than other types of investors, and a cogeneration project that may only be marginally economic for an industrial or commercial firm could be attractive to a utility. Moreover, utility ownership could allay concerns about competition from cogenerators.

Although there are no legal restrictions on utility ownership of cogenerating capacity, such ownership is at a competitive disadvantage because cogenerators in which electric utilities or utility holding companies own more than a 50-percent equity interest do not qualify for the economic and regulatory incentives under PURPA, and because public utility property is not eligible for the energy tax credit. Removing these disincentives would place utilities in an equal (at least) position with other investors with regard to cogeneration, and could substantially increase the production of cogenerated electricity.

However, full utility ownership under PURPA raises concerns about the possible effects of such ownership on competition and on utility obligations to minimize electricity generation costs. Utilities could favor their own (or their subsidiaries') projects in contracting for cogeneration capacity. They also might favor a few major established suppliers of cogeneration equipment, leading to the possibility of adverse effects on small business and the development of innovative technologies. Moreover, if a utility is paying its subsidiary for cogenerated electricity based on the utility's avoided cost of generation or purchases from the grid, then the utility has few incentives to reduce its marginal costs, because to do so would be to reduce the subsidiaries' rate of return and profitability. while these concerns about utility ownership under PURPA are real, they can be allayed through carefully drafted legislation or regulations, or through careful State review of utility ownership schemes. If these cautionary measures are taken, the benefits of utility ownership probably would outweigh the potential for anti-competitive and economic costs.

interconnection Requirements

The requirements for interconnecting and integrating cogenerators with utility transmission and distribution systems have become both technical and institutional issues. There are technical issues because of the wide variability among States and utilities on the type and quality of equipment that is necessary to regulate system power quality, protect the safety of utility employees, maintain control over system operations, meter cogenerators' electricity production and consumption properly, and prevent damage to utilities' and other customers' equipment. Few guidelines exist for interconnection needs, but the equipment required can add enough to a project's costs to make cogeneration economically infeasible. As a result, a high priority should be placed on the preparation of guidelines for utilities and State commissions to follow in setting interconnection requirements.

Second, utilities' legal obligation to interconnect is unclear. FERC regulations implementing PURPA established a general obligation to interconnect in order to carry out the statutory mandate that utilities must purchase power from and sell it to cogenerators. However, PURPA also amended the Federal Power Act to provide for full evidentiary hearings on interconnections upon the request of a utility or a qualifying cogenerator. The U.S. Court of Appeals recently ruled that the Federal Power Act procedure was the valid one. Therefore, if a utility is not willing to interconnect, the cogenerator must go through the costly and time-consuming process of such a hearing. Furthermore, most of the showings required of the petitioner in such a hearing would be extremely difficult and expensive for a poten-

tial cogenerator to make. This issue probably can only be resolved through a congressional amendment to PURPA that specifies utilities' obligation to interconnect with cogenerators (and small power producers) and leaves resolution of technical and cost issues to State utility commissions.

Air Quality Considerations

Proponents of cogeneration have argued that air pollution control regulations unnecessarily restrict the deployment of cogenerators. They suggest that cogenerators be given special treatment that accounts for their increased fuel efficiency and their displacement of emissions from centrally generated electricity. Proposed changes include emission standards that are tied to the amount of energy output rather than the fuel input, or separate and more lenient emissions limitations for cogenerators; and less strict new source review procedures for cogenerators under prevention of significant deterioration and nonattainment area provisions of the Clean Air Act (e.g., by allowing an automatic offset for reductions in powerplant and boiler emissions).

Although these changes would remove some disincentives to cogeneration, OTA found that in many situations there is no public health or environmental justification for automatically granting cogenerators relief from air quality requirements. A potentially more productive alternative would be to favor situations where cogenerators can demonstrate that they will have a positive net impact on air quality. In those cases, relief from regulatory requirements could be granted on a case-by-case basis. Review of individual cases will be especially important in urban areas where small internal combustion engine cogenerators that are not regulated under the Clean Air Act could have significant adverse impacts on air quality.

Research and Development

The most promising cogeneration applications are those that can use fuels other than oil and that can produce significant amounts of electricity. Of the currently available technologies (that are widely applicable), only steam turbines can accommodate solid fuels. But steam turbines have a low E/S ratio. Higher E/S ratio technologies are available, but can only use oil or gas. Therefore, research and development efforts should concentrate on demonstrating high E/S cogenerators that can burn solid fuels cleanly, and on advanced combustion systems such as fluidized beds that can be used in conjunction with a cogenerator. Because many potential cogenerators will not be able to burn solid fuels directly (due to site, environmental, or resource availability limitations), special attention also should be paid to the development and demonstration of gasifiers that would convert solid fuels to synthetic gas onsite, or for transport to the cogeneration site. Gasifiers would allow available cogeneration technologies to be installed now and use natural gas (currently relatively abundant) until synthetic gas becomes available.

Research also should be directed at removing the remaining technical uncertainties in interconnection, developing lower cost pollution control technologies for small generators, and improving coal transportation and handling in urban areas.

CHAPTER 1 REFERENCES

1. **Edison Electric Institute,** *Statistic/ Yearbook of the Electric Utility Industry: 1980* **(Washington, D. C.: Edison Electric Institute, 1981).**
2. **General Energy Associates,** *Industrial Cogeneration Potential: Targeting of Opportunities at the Plant Site* **(Washington, D. C.: U.S. Department of Energy, 1982).**
3. *Historical Statistics of the United States, Colonial Times to 1970: Part 2* **(Washington, D. C.: U.S. Government Printing Office, 1976).**
4. **Resource Planning Associates,** *Cogeneration: Technical Concepts,* ***Trends, Prospects*** **(Washington, D. C.: U.S. Department of Energy, DOE-FFU-1 703, 1978).**
5. **TRW Energy and Environmental Division,** *Analysis of Existing Industrial Cogeneration Capacity* (Washington, **D. C.: U.S. Department of Energy,** 1982).

Chapter 2

Issues and Findings

Contents

Page

What Is Cogeneration? 25
Will Cogeneration Save Oil? 25
Under What Circumstances Are Available Cogeneration Technologies Attractive?.. . . . 28
What Are Some Promising Future Cogeneration Technologies? 29
Will Cogeneration Be Competitive With Conventional Thermal and Electric Energy Systems?. 31
What Are the Industrial Cogeneration Opportunities?. 32
What Are the Opportunities for Cogeneration uncommercial Buildings? 34
What Are the interconnection Requirements for Cogeneration? 35
Who Will Own Cogenerators? 38
What Are the Potential Effects of the PURPA Incentives?. 39
What Are the Potential Economic impacts of Cogeneration on Electric Utilities?. 40
What Are the Environmental impacts of Cogeneration? 43
Chapter p references. 45

Tables

Table No. *Page*

3. interconnection Costs for Three Typical Systems 37
4. Considerations in Determining Avoided Costs Under PURPA 41
5. Effect of Cogeneration Characteristics on Air Quality 43

Figures

Figure No. *Page*

3. illustrations of Topping Cycle Cogeneration Systems 26
4. Schematic of a Bottoming Cycle Cogenerator 27
5. Schematic of a Combined-Cycle Cogenerator 29
6. Fuel Cell Operation. 30
7. Schematic of a Stirling Engine 31

Chapter 2
Issues and Findings

WHAT IS COGENERATION?

Cogeneration is the combined production of two forms of energy—electric or mechanical power plus useful thermal energy–in one technological process. The electric power produced by a cogenerator can be used onsite or distributed through the utility grid, or both. The thermal energy usually is used onsite for industrial process heat or steam, space conditioning, and/or hot water. But, if the cogeneration system produces more useful thermal energy than is needed onsite, distribution of the excess to nearby facilities can substantially improve the cogenerator's economics and energy efficiency.

The total amount of fuel needed to produce both electricity and thermal energy in a cogenerator is less than the total fuel needed to produce the same amount of electric and thermal energy in separate technologies (e.g., an electric utility generating plant and an industrial boiler). It is primarily this greater fuel use efficiency that has created a resurgence of interest in cogeneration systems. However, cogeneration also can be attractive as a means of adding electric generating capacity rapidly at sites where thermal energy already is produced.

Cogeneration technologies are termed "topping cycles" if the electric or mechanical power is produced first, and the thermal energy exhausted from power production is then captured and used (see fig. 3). "Bottoming cycle" cogeneration systems produce high-temperature thermal energy first (e.g., for steel reheating or aluminum remelting), and then recover the waste heat for use in generating electric or mechanical power plus additional, lower temperature thermal energy (see fig. 4). Topping cycle cogenerators would be used in residential, commercial, and most industrial applications, while bottoming cycle applications would most likely arise from high-temperature industrial processes.

WILL COGENERATION SAVE OIL?

Cogeneration is widely acclaimed as a conservation technology because it uses less fuel (measured in Btu equivalents) to generate a given amount of electricity and useful thermal energy than separate conventional energy systems (e.g., a powerplant and an industrial boiler; see fig. 2). However, just because cogeneration is more fuel efficient does not mean that it will automatically reduce oil consumption.

Whether cogeneration will save oil (or natural gas, or any other particular fuel) depends on the fuel burned by a cogenerator and the fuel used in the separate electric and thermal energy producing systems the cogenerator displaces. if both of these separate systems would burn oil, and continue to burn oil for most of the operating life of an oil-fired cogenerator that replaced them, then an oil burning cogenerator would reduce total oil consumption. This savings can range from a 15-percent reduction in oil use when a steam turbine cogenerator is substituted for a steam electric powerplant and a separate low-pressure steam boiler, to a 34 percent savings if a diesel cogenerator that converts 38 percent of the fuel energy to electricity (30 percent to useful thermal energy) replaces separate oil-fired powerplants and furnaces.

However, if a cogenerator that will burn oil during most of its useful life replaces either a powerplant or a conventional furnace or boiler that uses a different fuel (e.g., coal, wood), or that plans to convert to a different fuel during the useful life of the cogenerator, then oil burning cogeneration will actually increase total system oil use. Therefore, cogeneration will only save oil if it uses an alternate fuel itself (e.g., coal), or if it replaces separate electric and thermal energy systems that use (and will continue to use) oil.

48-308 O - 83 - 3 : QL 3

Figure 3.—illustrations of Topping Cycle Cogeneration Systems

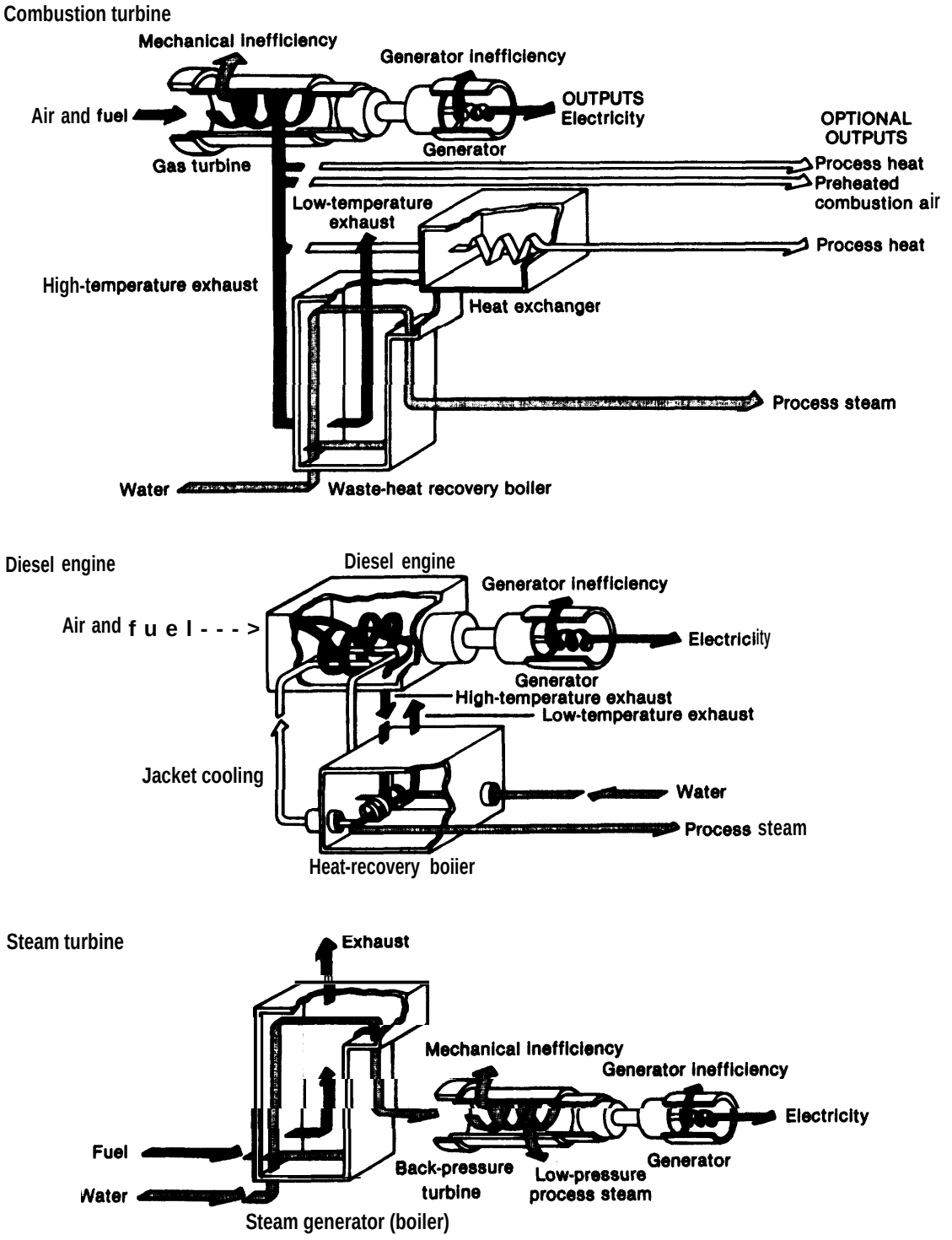

SOURCE: Resource Planning Associates, *Cogeneration: Technical Concepts, Trends, Prospects* (Washington, D. C.: U.S. Department of Energy, DOE-FFU-1703, 1978).

Figure 4.—Schematic of a Bottoming Cycle Cogenerator

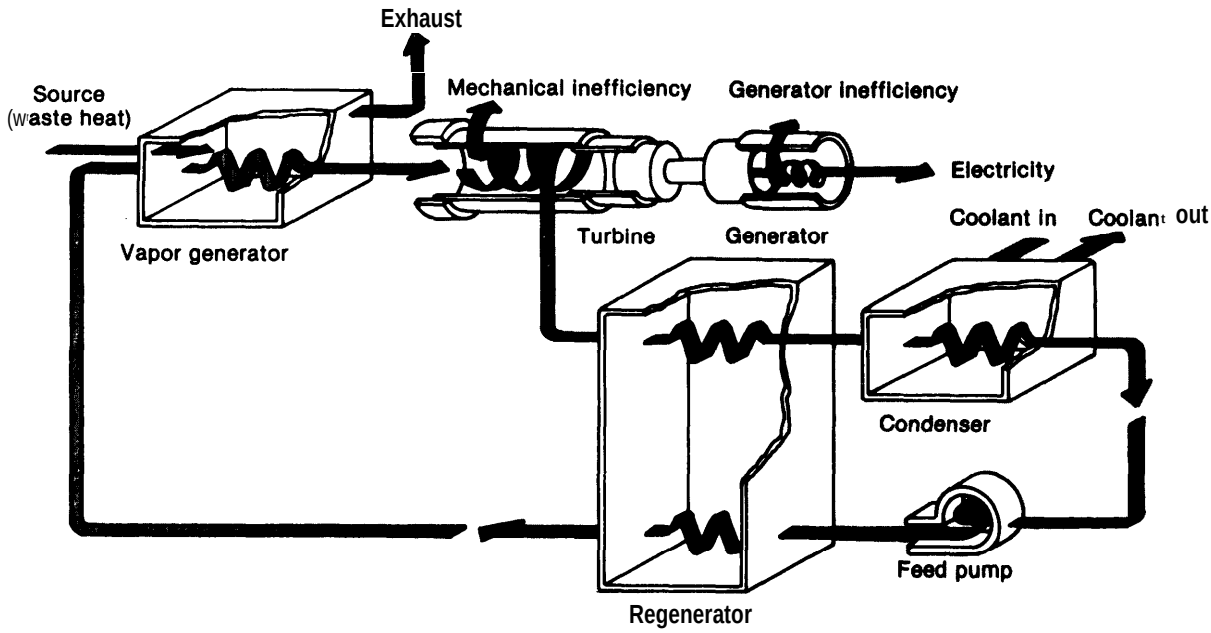

SOURCE: Resource Planning Associates, *Cogeneration: Technical Concepts, Trends, Prospects* (Washington, D. C.: U.S. Department of Energy, DOE-FFU-1703, 1978).

This finding is especially important for three reasons. First, most commercially available cogeneration technologies require clean premium fuels such as oil or natural gas (see ch. 4). Steam turbine cogenerators can burn coal or other alternate fuels such as biomass or solid waste, but may be prevented from doing so due to site or environmental considerations. Advanced cogenerators that can use alternate fuels may not be available for several years. Second, although industrial processes and, to a lesser extent, electric utilities, are heavily dependent on oil and natural gas, both groups already plan to reduce their use of these fuels either through conservation or conversion to alternate fuels or both. Third, although the Powerplant and Industrial Fuel Use Act of 1978 (FUA) prohibits the use of oil and natural gas in new powerplants and boilers, cogenerators are exempt from these prohibitions if less than half of their annual electric output is sold or exchanged for resale, *or* if they are relatively small (less than about 10 megawatts per unit (MW/unit) or 25 MW/site, assuming a 10,000 Btu per kilowatthour (Btu/kWh) heat rate), or if they can demonstrate a net savings of oil or gas.

When these three considerations are combined with economic conditions that favor cogeneration (e.g., high retail electricity rates), the combination could outweigh market considerations and result in oil-fired cogeneration that would lock industrial or commercial cogenerators into premium fuel use for 10 to 20 years or more. On the other hand, if oil cogeneration is used only where premium fuel savings are sure to result (i.e., where both the electric and thermal systems the cogenerator replaces would continue to burn oil for most of the operating life of the cogenerator), or where conversion to alternate fuels will be possible in the near term (e.g., a dual-fuel system that can convert from oil to synthetic gas when gasification technology is improved), then even oil-fired cogeneration can pose significant oil savings.

UNDER WHAT CIRCUMSTANCES ARE AVAILABLE COGENERATION TECHNOLOGIES ATTRACTIVE?

The commercially available cogeneration technologies described in this report include steam turbines, open-cycle combustion turbines, combined-cycle systems, diesels, and steam Rankine bottoming cycles. All of these technologies will provide energy savings because their fuel efficiency is greater than that of the separate electric and thermal energy systems they will replace, but their comparative technical, economic, and fuel use advantages vary (see table 1 and ch. 4; for a review of their relative environmental advantages, see, "What Are the Environmental Impacts of Cogeneration?").

A steam turbine topping cycle cogenerator (see fig. 3) produces thermal energy at moderate temperatures and pressures that are suitable for many industrial applications that do not need high-temperature heat. Available steam turbines have a relatively high overall efficiency, but their ratio of electricity generated to thermal energy produced (electricity-to-steam (E/S) ratio) is relatively low. Therefore, steam turbine cogenerators are usually not appropriate where large electricity requirements are paramount, such as the need to provide power to the grid to improve economic feasibility. In addition, steam turbines can have relatively high unit costs, longer startup times and installation leadtimes than other available cogenerators, and more stringent personnel requirements specified by boiler codes. On the other hand, steam turbines are extremely reliable, and can use a wider range of fuels more easily than other cogeneration technologies, including coal, biomass, and solid wastes, as well as coal-derived liquids and gases when they become available.

Open-cycle combustion turbine topping cycles (see fig. 3) have a higher E/S ratio and produce higher temperature steam than steam turbines. Therefore, combustion turbines can meet the electric and thermal needs of more types of industries and are more likely to produce excess electricity that may be exported to the grid. Combustion turbines' unit cost and construction time are relatively low while their reliability is comparable to that of steam turbines. Combustion turbines are available in a wider range of unit sizes than steam turbines, and the lower capacity units (i.e., below 7 MW) may be attractive for commercial facilities (such as shopping centers, apartments, hotels) because they are small in size and can be operated remotely. Combustion turbines also are well suited to arid climates because they require no cooling water. Finally, although open-cycle combustion turbines cannot now use solid fuels such as coal or wood directly, they will be able to use synthetic gas or liquid fuels derived from coal or biomass, and units using pulverized wood directly are under development.

Combined-cycle cogenerators (combined steam turbine and combustion turbine systems; see fig. 5) increase electric power output at the expense of recoverable heat. They have a higher E/S ratio than either a steam or combustion turbine alone, and thus will be most attractive in situations where electricity requirements are relatively high, or where electric power can be distributed to the grid economically. Their unit capacity also tends to be greater than either of the separate turbine systems. Currently available combined-cycle systems require too much space for most commercial applications, but they should be well suited to larger industrial facilities. Their unit cost and installation leadtime are higher than combustion turbines', but comparable to medium- or large-size steam turbines. Furthermore, while combined cycles' availability is lower than either system alone, their overall fuel efficiency is higher. Finally, combined cycles can use the full range of fuels and will be readily adaptable to fluidized bed combustion systems.

Diesel cogenerators (see fig. 3) have a higher E/S ratio than the technologies described above, and thus will be very attractive for facilities with high electricity demand but low thermal energy needs (i.e., most commercial building applications and many smaller industries), or where electricity can be distributed to the grid economically. Diesels' relatively high efficiency, low cost, short installation leadtime, long service lifetime, and established service infrastructure all contribute to their attractiveness. However, diesels also can

Figure 5.—Schematic of a Combined-Cycle Cogenerator

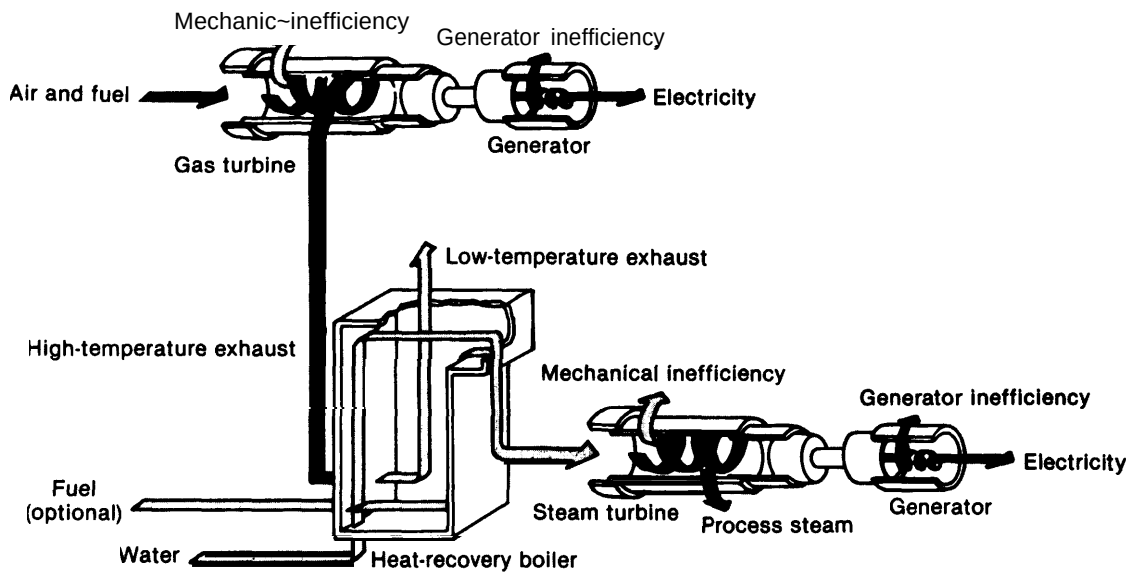

SOURCE: Resource Planning Associates, Cogeneration: Technical Concepts, Trends, prospects (Washington, D. C.: U.S. Department of Energy, DOE-FFU-1703, 1978).

have high maintenance costs and may be less acceptable environmentally due to their potentially high nitrogen oxide and particulate emissions. In addition, currently available diesel technologies must burn oil or gas (some are dual-fueled), although they will be able to use synthetic fuels. Diesels capable of burning powdered coal or coal slurries are under development, but it is unclear whether they will be economically competitive with other types of cogenerators.

Rankine steam bottoming cycles (see fig. 4) are conceptually different from the technologies summarized above in that high-temperature process heat is produced first, then waste heat from the thermal process is used to produce electric or mechanical power plus additional lower temperature thermal energy. Because waste heat is used to generate electricity, Rankine bottoming cycles can present even greater fuel savings than topping cycle cogenerators. The cost, average annual availability, and construction leadtime of Rankine steam bottoming cycles are comparable to steam turbines, while their expected service life is approximately equal to combustion turbines, combined cycles, and diesels. Unit capacity, however, often is smaller than other cogeneration systems. Rankine steam bottoming cycles typically are considered for industrial applications with very high-temperature heat needs.

WHAT ARE SOME PROMISING FUTURE COGENERATION TECHNOLOGIES?

Current research and development efforts on cogeneration are directed toward both improvements in existing systems (see, "Under W/hat Circumstances Are Available Cogeneration Technologies Attractive?") and the development of new technologies. The primary concerns in these ef-

forts include the ability to burn fuels other than oil and gas (e.g., coal, biomass, solid waste), improved fuel efficiency, increased electrical output, and lower capital and operating costs (see ch. 4).

Advanced steam turbine cogenerators with higher steam pressures and temperatures, and thus greater electric generating efficiency, should be available between 1985 and 1990. Much of the research on steam turbines is aimed at improving the efficiency of smaller systems (less than 7 MW), while reducing their cost. Similarly, research on open-cycle combustion turbines is directed toward increasing efficiency through higher inlet temperatures by improving turbine blade cooling or making materials changes in blade composition. Materials changes also would improve the anticorrosive properties of turbine blades and thus would allow combustion turbines to use solid fuels (municipal solid waste, pulverized coal, etc.). However, as with steam turbines, capital and operating costs for advanced combustion turbines are likely to be slightly higher than present costs. Improvements in combined-cycle systems include the advances in combustion turbines, as well as the development of smaller combined cycles with a wider range of potential applications. Finally, advanced diesel cogenerators are being developed that use coal-derived fuels, and have a much greater power output, as well as those for which all the recovered thermal energy could be high-quality steam. Each of these improvements in the diesel cogenerator should be commercially available by 1990, but not all in the same system.

Advanced cogeneration technologies that are not now available commercially include closed-cycle combustion turbines, organic Rankine bottoming cycles, fuel cells, and Stirling engines (see table 1 and ch. 4). (Solar cogenerators, such as the therm ionic topping system, are not discussed in this report.)

Closed-cycle, externally fired combustion turbines are not available commercially in the United States but are well developed in Europe and Japan. These systems are potentially very attractive because they can use a wide variety of fuels (including coal), have a relatively high efficiency and E/S ratio, and should be priced competitively with other topping cycle cogenerators. They will be attractive primarily in larger industrial and utility applications.

Organic Rankine bottoming cycles evaporate organic working fluids (e.g., toluene) to produce shaft power, and can operate efficiently at lower temperatures and in smaller sizes (i.e., 2 kW to 2 MW) than steam bottoming cycles. Because they use lower temperature heat, they can be adapted to a wide variety of heat sources, including solar, geothermal, and industrial waste heat, or engine exhausts. However, they currently require more maintenance than most topping cycles, and further development and demonstration are necessary before the organic Rankine bottoming cycle can be considered a "mature" technology.

Fuel cells (electrochemical devices that convert the chemical energy of a fuel directly into electricity with no intermediate combustion cycle —see fig. 6) are potentially attractive cogenerators due to their modular construction, good electrical-load-following capabilities, automatic operation, ability to use coal-derived fuels, and low pollutant emissions. In addition, fuel cells could be adapted to a wide range of sizes and applications, from small (40 to 500 kW) residential and commercial systems to larger industrial and utility plants (5 to 25 MW). Although fuel cell demon-

Figure 6.—Fuei Cell Operation

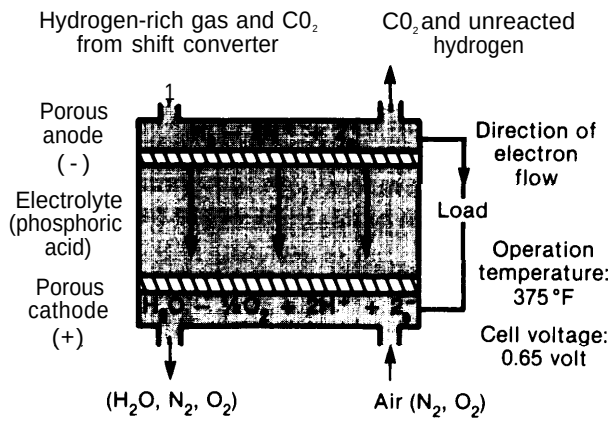

SOURCE: P. S. Khalsa and L. Stamets, *Commercial Status: Electrical Generation and Nongeneration Technologies* (Sacramento, Calif.: California Energy Commission, April 1980).

stration plants are under construction, commercial readiness is still at least 5 years away. The primary development concerns include somewhat high capital costs and short service life.

Finally, Stirling engines (see fig. 7) could offer an attractive alternative to available topping cycles because of their ability to use coal and other solid fuels, their high thermal and part-load efficiency, and their low emissions, noise, and vibrations. Stirling engines also could be used as components of solar energy systems or as adjuncts to fluidized bed combustors, nuclear reactors, or other conversion technologies. Current research efforts are directed toward improved efficiency and solid fuel combustion characteristics, as well as lower capital costs, before Stirling engines can be considered commercial. Because they produce relatively low-temperature recoverable heat, Stirling engines will be most attractive for water heating or in facilities with relatively small process heat requirements.

In addition to the cogeneration technologies reviewed above, two types of advanced combustion systems may be attractive for increasing cogenerators' fuel flexibility: gasifiers and fluidized bed combustors. Gasifiers would convert coal, pet coke, or other solid fuels to medium-Btu gas (about 300 Btu/standard cubic foot) for distribution to cogenerators (or other facilities) within about a 100-mile radius. Gasification could centralize the use of solid fuels, and thus eliminate cogenerators' need for coal storage and handling facilities. However, gasification is not yet a proven technology, although both small- and large-scale systems are being demonstrated. Whether such a scheme will be successful is heavily dependent on the capital costs, which are still highly uncertain. Fluidized bed combustors can accommodate a wide range of solid fuels, and operate at a lower temperature and pose fewer environmental and operating problems than conventional boilers. Fluidized beds can be adapted to fire several different types of cogeneration technologies. Atmospheric fluidized bed systems could be used with steam or combustion turbines or combined cycles, while pressurized systems could drive combustion turbines or combined cycles. Fluidized bed combustors are now being demonstrated and could become commercial within a few years.

Figure 7.—Schematic of a Stirling Engine

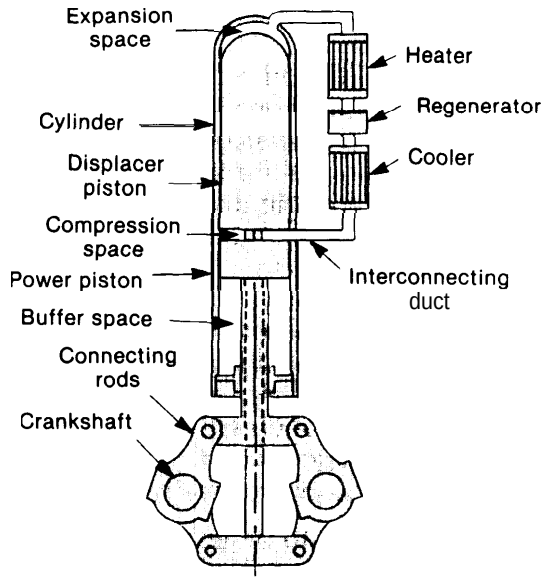

SOURCE: *Application of Solar Technology to Today's Energy Needs* (Washington, D. C.: U.S. Congress, Office of Technology Assessment, OTA-E-86, June 1978).

WILL COGENERATION BE COMPETITIVE WITH CONVENTIONAL THERMAL AND ELECTRIC ENERGY SYSTEMS?

Cogeneration is most likely to be competitive with conventional separate electric and thermal energy technologies when it can use relatively inexpensive, plentiful fuels, and where there are large thermal energy needs or it can meet on-site energy needs while supplying significant amounts of electricity to the utility grid.

oil-fired cogeneration will only save oil in a few circumstances (see, "Will Cogeneration Save oil?"). Moreover, the price gap between oil/gas and other fuels is likely to become wider over time. Therefore, cogenerators will have to use relatively inexpensive and plentiful fuels (such as coal, biomass, or solid wastes) in order to be

economically competitive with utility generating capacity over the long run (10 to 20 years and beyond). Alternatively, if the utility's avoided cost is determined by the price of oil, or if the utility is primarily dependent on oil-fired capacity, then natural gas may remain economically attractive as a cogeneration fuel for several years. In the short term, it is possible that cogenerators may be able to rely on natural gas as a transition measure until synthetic gas from coal or biomass becomes widely available at a competitive price. However, if gasifier technology or planned advances in the fuel flexibility of cogeneration technologies are not available as soon as expected, or synthetic gas is not competitive in price with natural gas, this strategy could lock cogenerators into premium fuel use for many years.

For cogeneration to be economically attractive, there usually must also be substantial thermal loads. Sites with low loads (e.g., less than 50,000 lb/hr of steam) due to conservation measures or limited process needs, or with fluctuating loads, generally would not be economically competitive with conventional steam boilers and utility-supplied electricity. Thus, commercial buildings are likely to have a low potential for cogeneration because of their very low thermal load factors. In some cases, however, cogenerators can be "undersized" and operated at a high capacity factor to meet the base thermal load, with conventional boilers or furnaces used when necessary to meet the remaining thermal demand (see, "What Are the Opportunities for Cogeneration in Commercial Buildings?").

Finally, cogeneration's ability to meet onsite thermal and electrical needs, or to meet the thermal needs and supply significant amounts of power to the utility grid, will be a major determinant of its economic competitiveness. In the regions where electric utilities have substantial amounts of generating capacity fueled by oil or natural gas, or where demand growth is significant (primarily the Northeastern States and California, and to a lesser extent the South Atlantic and West South-Central States), cogeneration will be more attractive when it can supply significant amounts of electricity to the grid (see, "What Are the Potential Effects of the PURPA Incentives?"). Alternatively, if the utility has substantial excess capacity or primarily uses coal or other nonpremium fuels, and avoided costs are low or retail electricity rates are high, a cogenerator's economic competitiveness will depend primarily on its ability to reduce onsite energy costs.

These determinants of cogeneration's economic competitiveness will affect the choice of cogeneration technologies. Of the technologies that are commercially available, only the steam turbine topping and Rankine cycle bottoming systems can use fuels other than oil/gas. However, bottoming cycles usually are limited to specialized applications that require high-temperature heat, while steam turbines have low E/S ratios (see, "Under What Circumstances Are Available Cogeneration Technologies Attractive?"). Systems with higher E/S ratios that will be able to use alternate fuels are under development or demonstration, as are advanced combustion technologies such as fluidized beds and gasifiers, and should be available commercially by the mid to late 1980's (see, "What Are Some Promising Future Cogeneration Technologies?").

WHAT ARE THE INDUSTRIAL COGENERATION OPPORTUNITIES?

Cogeneration of electricity and thermal energy for industrial processes is a proven concept, with approximately 9,000 to 15,000 MW of cogeneration capacity in operation at industrial sites throughout the United States (see table 2), and at least 3,300 MW in the planning stage or under construction. The technical potential for industrial cogeneration (the number of sites at which the thermal load is sufficient to justify an investment in a cogeneration system) is high—perhaps as much as 200 gigawatts (GW), or about 32 percent of current U.S. generating capacity. However, the market potential (the amount for which an investment is likely to be made) is much lower due to economic and institutional considerations.

The industries in which cogeneration has a significant market potential are those that use large amounts of thermal energy, especially the pulp and paper, chemical, steel and other metals, petroleum extraction and refining, cement, food processing, and textiles industries. In these and other industrial sectors, cogeneration's market potential will be determined by:

- **The availability of, and economics of using, alternate fuels:** The pulp and paper industry, for example, produces large amounts of burnable wastes and has long considered cogeneration to be an integral part of its industrial process. Where wastes (including waste heat) or other solid fuels are unavailable or infeasible (due to economic, site, or other limitations), cogeneration may not be able to compete economically with conventional thermal energy production plus utility-supplied electricity.
- **Whether conservation measures will reduce the economics of cogeneration:** Industry has reduced its thermal energy use substantially through conservation in the last few years, and conservation may be cogeneration's primary "competitor." For instance, the cement industry once was considered a prime candidate for bottoming cycle cogeneration due to the high temperature (900° to 1,000°F) of the kiln exhaust gases. But conservation measures have reduced that temperature so much (now 300° to 400° F, and still declining) that it is no longer feasible to use in bottoming cycle systems.
- **The availability of new process technology that uses less (or no) thermal energy:** For example, the thermal energy requirements of the open-hearth steelmaking process made the steel industry a major cogenerator. But large open-hearth mills are expected to be replaced gradually by small mills run with electric arcs that have little or no thermal demand and thus a low potential for cogeneration. However, if new electric arc mills were sited close to another thermal energy user, the output from a cogenerator could be shared between the two facilities.
- **The availability of advanced process technologies:** New technologies and improved versions of existing process technologies now under development will have greater fuel flexibility, higher fuel efficiency, and higher electricity output.
- **Whether cogeneration retrofits are feasible or new plants will be built: For instance, petroleum refineries are well suited to cogeneration, and some existing refineries could be upgraded, resulting in the production of low-Btu gas suitable for onsite cogeneration. But, few new refineries are likely to be built except in areas such as California, which has special requirements related to enhanced oil recovery.**
- **Whether a plant's operating pattern makes cogeneration economic: Many food processing plants operate only during harvest season, and the resulting low capacity factor may make cogeneration economically infeasible. However, the food processing season often overlaps the hottest months when irrigation and air-conditioning loads contribute to peak demands on electric systems in rural areas, the seasonal price for utility generated power is often very high and/or its reliability is low. As a result, this industry's seasonal operating pattern can be outweighed by its potential for lower energy costs.**
- **The availability of capital for investments in cogeneration: Industrial firms typically require shorter payback periods for their investments than cogeneration may be able to provide, although current accelerated depreciation measures and investment and energy tax credits can improve the payback significantly. Cogeneration also must compete for available capital with process equipment or other investments that improve an industry's competitive position (as well as with conservation measures, as mentioned above). Third-party or utility ownership can improve capital availability (see, "Who Will Own Cogenerators?"), as can low interest loans and other financing measures that alleviate the effects of high interest rates and capital shortages.**
- **Whether there is a match between a plant's needs and the cogenerator's output: An industry may need more or less thermal or**

electric energy than a cogenerator provides. usually the technology will be chosen to optimize the match between load and output, but this will not always be possible. The Pub lic Utility Regulatory Policies Act (PURPA) requirements that electric utilities offer to buy power from and sell power to cogenerators can mitigate an electricity supply and demand mismatch, but the economics may not always be favorable to the cogenerator (see, "What Are the Potential Effects of the PURPA Incentives?"). In some cases, industrial parks with central cogenerators and shared energy products through dedicated distribution systems may be an attractive solution to thermal and electric supply/demand mismatches.

- Regulatory uncertainty and perceived risks: Doubt about the continued availability of the economic and regulatory incentives offered by PURPA, the fuel use and pricing provisions of FUA and the Natural Gas Policy Act, and the various tax incentives for investment in cogeneration (e.g., investment and energy tax credits, accelerated cost recovery, safe harbor leasing) can be a significant deterrent to investment in cogenerators. Similarly, uncertainty about interest costs and capital availability, fuel costs, investment payback periods, the use of solid fuels, and environmental regulation can be disincentives to the implementation of cogeneration projects.

All of the above factors could lead industrial managers to adopt a "wait-and-see" attitude toward cogeneration. As a result, widespread deployment of industrial cogeneration capacity could be delayed a decade or more. But the resolution of legal and regulatory uncertainties, the rapid development and demonstration of advanced technologies that can burn solid fuels cleanly, and lower interest rates or innovative financing and ownership arrangements could substantially improve industrial cogeneration's market potential. In addition, if natural gas prices are seen to be lower than distillate for an extended period—lo to 20 years—an industry might decide it is worth the investment risk if their purchase power rates are based on oil.

WHAT ARE THE OPPORTUNITIES FOR COGENERATION IN COMMERCIAL BUILDINGS?

Although the opportunities for cogeneration in commercial buildings depend on the same general factors as industrial cogeneration—thermal energy demand, availability of capital, competition with conservation, capability of using nonpremium fuels, etc.—there are characteristics about buildings that constrain cogeneration more than in industry.

In the near term–the next 10 to 15 years–commercial cogeneration will be fueled predominantly by natural gas. Coal-fired units can be used but these will be limited because of the difficulties of handling and storing coal in and around commercial buildings. Therefore, the principal determinants for commercial cogeneration for the near term will be the price and availability of natural gas, and either the price of electricity from central station units or the price that utilities will pay for electricity from cogenerators as set by their public utility commissions. For those regions where the latter is set at or near the price of oil-fired electricity and the utilities have oil or natural gas fueled capacity, commercial cogeneration fueled by natural gas has a promising market even if natural gas prices should approach those of distillate fuel oil. The primary advantage of commercial cogeneration in these cases is that it allows rapid development of new capacity to meet new demand and/or to replace the utility's oil-fired capacity.

Under least cost conditions, cogenerated electricity will be produced and sold when it is less expensive than central station electricity (see, "Will Cogeneration Be Competitive With Conventional Thermal and Electric Energy Systems?"). Net fuel savings by cogeneration compared to separate production of electricity and heat, however, may be less than that indicated by the

amount of electricity sold because of the very low thermal load factors of commercial buildings. The most promising arrangement for commercial buildings probably would be to undersize the cogenerator and operate it at a high capacity factor to meet the base thermal load, and use conventional thermal energy systems when necessary to meet the remaining load. This allows a high degree of heat recovery and efficient capital utilization. Alternatively, the diversity added by using several buildings for heating loads could greatly increase net fuel savings. This also means that buildings located in regions with high thermal loads (about 6,000 degree days or higher per year) will be the most attractive candidates for cogeneration.

However, in both the near and long term, commercial cogeneration will compete with conservation-especially in new buildings. Conservation will very likely be more economic than cogeneration for most of the Nation's buildings. Further, the more efficient a building is, the lower its thermal demands and the less attractive cogeneration becomes. This is particularly significant when capital is scarce. Utility ownership may be one way of reducing the severity of the latter concern (see, "Who Will Own Cogenerators?").

For the longer term, beyond 10 years, commercial cogeneration ultimately must compete with new coal-fired or, possibly, nuclear capacity. It is unlikely that natural gas-fired cogeneration will be able to compete economically with new coal-fired central station capacity—even with byproduct credit for displacing natural gas for space heating—unless natural gas prices stay well below distillate oil. This is not likely to be the case toward the end of the century as supplies of conventional natural gas diminish. Where electricity growth rates are high (greater than 2 percent per year) and thermal demands are high (6,000 degree days or higher per year), however, natural gas-fired commercial cogeneration, even at high gas prices, could be competitive for new intermediate and peaking electric loads or for cases in which coal use is limited.

Cogeneration directly fired by coal with new technologies, such as fluidized bed combustion, or indirectly through low-Btu gasification and combined-cycle systems, could compete with new central station coal capacity (see, "What Are Some Promising Future Cogeneration Technologies?"). Some current analyses indicate that this will be so, but the OTA analysis of synthetic fuels for transportation shows that there is considerable uncertainty with respect to cost of synfuels production (6). Other promising possibilities are combined-cycle systems fired by biomass or solid waste gasifiers. These new technologies do not eliminate the coal or biomass handling problem, however, which will still act to inhibit cogeneration.

Finally, environmental considerations are likely to be more important for commercial buildings than for other cogeneration applications. This is due in part to the potential for increased emissions with the technologies that are most suited to commercial building applications, and in part to the inherent characteristics of the urban environment (e.g., proximity of buildings to each other, urban meteorology; see, "What Are the Environmental Impacts of Cogeneration?").

WHAT ARE THE INTERCONNECTION REQUIREMENTS FOR COGENERATION?

In the past, electric utilities and the agencies that regulate them have only been concerned with power flows from the central grid to customers, or from one utility to another. However, the economic and other incentives offered to cogeneration under Federal (and some States') law assume that cogenerators may feed power back into the grid. These "two-way" power flows have raised concerns about the technical and safety aspects of interconnection and integration with the grid, about liability for any damage that may result from improper interconnection, and about the costs of the equipment needed for proper interconnection and integration. OTA found that

most of the technical aspects of interconnection and integration with the grid are relatively well understood, although some electric utilities still have reservations. Rather, the primary issues re lated to interconnection are the costs of the equipment and the utilities' legal obligation to interconnect.

The technical aspects of interconnection about which utilities are concerned include maintaining power quality, metering cogenerators' power production and consumption, and controlling utility system operations. Power supplied by cogenerators to the grid must be within certain tolerances so that the overall utility system power quality remains satisfactory and utilities' and customers' equipment will function properly and not be damaged. In order to maintain power quality, grid-connected cogenerators may need capacitors to keep voltage and current in phase, over/under relays to disconnect the generator if its voltage goes outside a certain range, and a dedicated distribution transformer to isolate voltage flicker problems. However, the power quality effects of interconnected cogenerators often are technology- and site-specific, and not all systems will need all of this equipment. in particular, smaller systems (under 20 kW) may have few or no adverse effects on power quality and may require only limited interconnection equipment. Larger systems probably will already have dedicated transformers, and would only need capacitors to correct power factor if they use induction (as opposed to synchronous) generators.

Cogenerators' power production and consumption must be metered accurately in order to collect data for better understanding their contribution to electric system loads, and thus for determining how to price buyback and backup power. Two standard watthour meters can be used, with one operating normally to measure electricity consumption and the other running backwards to indicate production. Alternatively, more advanced meters are available that indicate not only kilowatthours used/produced, but also power factor correction and time-of-use. Although an advanced meter provides more useful data, it also costs about five times more than two standard watthour meters. Whether cogenerators are given a choice between standard and advanced meters and, if not, whether the utility or the cogenerator pays for the advanced meter, varies among utilities.

Utilities also are concerned about cogenerators' effects on their ability to control utility systems operations, including the possibility that large numbers of cogenerators (or small power producers) would overload system dispatch capabilities, and would contribute to unstable power systems. Although very large cogenerators might be dispatched by a central utility control center (and thus require connection via expensive telemetry equipment), most utilities will treat cogenerators as "negative loads" by subtracting the power produced by the dispersed generators from total system demand, and then dispatching the utility's capacity to meet the reduced demand. Studies of such negative load treatment indicate that it should work well where the total capacity of the cogenerators is limited compared to the overall system capacity. However, additional research is needed on the effects of large numbers of cogenerators on system stability. The primary concern with a significant system penetration of cogenerators is their ability to remain synchronized with the system following a disturbance.

Without proper interconnection measures, large numbers of cogenerators also might pose hazards to worker safety during repairs to transmission and distribution lines. First, dispersed generators will need to locate their disconnect switches in specified areas in order to simplify line workers' disconnect procedures. Second, induction (and, very occasionally, synchronous) generators must guard against self-excitation either by using voltage and frequency relays and automatic disconnect circuit breakers, or by locating their power-factor correcting capacitors where they will be disconnected with the cogenerator or where they can be isolated easily by line workers. Therefore, while proper interconnection must be ensured in order to protect utility workers' safety, none of the necessary precautions is difficult to implement.

The cogenerator usually is liable for accidents or damage to equipment resulting from improper interconnection or operation. The utility may include the cost of insurance against such mishaps

in the cogenerator's regular billing, or liability (and adequate insurance to cover it) may be a condition of the contract between the utility and cogenerator. However, in some cases, requirements for both insurance and protective equipment may be redundant and place an excessive cost burden on the cogenerator.

The cost of interconnection varies widely depending on the size and type of cogenerator, the equipment already in place, and the utility's or State regulatory commission's requirements. Few guidelines have been published (although several are being prepared) and some utilities or commissions may require more equipment than described above in order to provide extra protection for their system and their other customers. In addition, the quality of equipment required (industrial or utility grade) can affect the cost substantially. Most utility engineers agree that the less expensive industrial grade should be adequate for smaller cogenerators, but specifications of the cutoff range from 200 to 1,000 kW. Finally, costs will depend on the amount of equipment that is already in place (e.g., dedicated transformers) and on the adequacy of existing distribution lines.

Based on published studies, OTA estimated two sets of interconnection costs for three sizes of cogeneration systems: a "base case" that assumes that much of the equipment is already in place or not required (e.g., capacitors, dedicated transformers, protective relays), and a "worst case" that assumes this equipment must be purchased (see table 3). Most of the cost difference between the two cases results from the addition of a dedicated transformer, and from the use of more expensive relays and other protective devices. Moreover, these estimates indicate that there are significant economies of scale in interconnection costs.

The Federal Energy Regulatory Commission's (FERC) rules implementing section 210 of PURPA originally specified that "any electric utility shall make such interconnections as may be necessary to accomplish purchases or sales" of cogenerated power. However, this rule recently was overturned by the U.S. Court of Appeals on the grounds that it is inconsistent with other parts of PURPA that provide for individual FERC orders requiring interconnection after the opportunity for a full evidentiary hearing in accordance with the Federal Power Act. Thus, if cogenerators cannot get a utility to agree to interconnect with them, they will have to meet the multiple stringent legislative tests of the Federal Power Act, which will be very difficult, expensive, and time-consuming for the cogenerator.

Table 3.—interconnection Costs for Three Typical Systems

Equipment	50 kW Best	50 kW Worst	500 kW Best	500 kW Worst	5MW Averaae
Capacitors for power factor		$1,000	-------	$5,000	
Voltage/frequency relays	$1,000	1,000	,	1,000	$1,:00
Dedicated transformer	—	3,900		12,500	40,000
Meter	80	1,000	80	1,000	1,000
Ground fault overvoltage relay	600	600	600	600	600
Manual disconnect switch	300	300	1,400	1,400	3,000
Circuit breakers	620	620	4,200	4,200	5,000
Automatic synchronizers	—	—	2,600	2,600	2,600
Equipment transformers	600	1,100	600	1,100	1,100
Other protective relays	—	3,500	–	3,500	3,500
Total costs ($)	$2,600	$13,020	$11,080	$32,900	$57,800
Total costs ($/kW)	52	260	22	66	12

NOTE: "-" means an optional piece of interconnection equipment that was not included in the requirements and cost calculations.

SOURCE: Office of Technology Assessment calculations based on data derived from Howard S. Geller, *The /interconnection of Cogenerators and Small Power Producers to a Utility System* (Washington, D. C.: Office of the People's Counsel, February 1982).

WHO WILL OWN COGENERATORS?

Cogenerators might be owned by industrial, commercial, or other users, by utilities, by third parties, or by some combination of these (joint ventures). Each of these forms of ownership has relative advantages and disadvantages for financing, taxation, operating characteristics, and regulatory considerations.

The energy and investment tax credits, coupled with the economic and regulatory incentives instituted by PURPA, encourage private firms (e.g., industrial facility and commercial building owners) to cogenerate. The PURPA requirement that utilities purchase electricity from, and sell it to, cogenerators, and the provision that exempts cogenerators from regulation as electric utilities, removed the primary institutional and economic obstacles to private ownership of cogeneration capacity. PURPA also encourages the development of contractual relationships between private owners and electric utilities—often a prerequisite for obtaining attractive financing. Long-term contracts can establish a purchase rate based on the utility's avoided costs either at the time of the contract or at the time power is delivered to the utility, or the cogenerator and utility can negotiate a price independent of avoided cost considerations. PURPA incentives are augmented by private owners' ability to earn up to 20 percent tax credits for investment in cogenerators through the end of 1982, and 10 percent thereafter, which offers a boost to cash flow early in a project's life. Finally, user ownership generally would provide the greatest control over the cogenerator's energy output. However, industrial and commercial firms' willingness to invest in cogeneration will be influenced heavily by the cost of capital (often higher than the cost to utilities or many third-party investors), the need to invest in process equipment or other items that will contribute to a firm's competitive position, and the availability of less costly conservation measures.

Investor-owned electric utilities and their subsidiaries are logical potential owners of cogeneration capacity because electricity generation is their primary business. Ownership of cogenerators would enable the electric utility industry to provide a wide range of energy supply options and not just to facilitate their development by other parties. Moreover, utility ownership would reduce the potential for revenue losses from the development of generating capacity by nonutilities, while providing an additional revenue stream from thermal energy sales. Direct utility ownership (i.e., not utility subsidiaries) also could result in lower generation costs to be passed on to consumers because the avoided cost would become the lower of the cost of cogenerating or of providing electricity from alternate sources (see, "What Are the Potential Effects of the PURPA Incentives?"). In addition, utilities are more likely to choose technologies that have high E/S ratios and that can accommodate coal or other alternate fuels (e.g., with gasifies). As a result of all these considerations, cogeneration's market potential in general, and its ability to supply large amounts of electricity to the grid in particular, are likely to be enhanced substantially under utility ownership.

However, current Federal policy toward cogeneration discourages full utility ownership. First, PURPA incentives are not available to cogenerators in which utilities own more than a 50-percent interest. Allowing 100-percent ownership would mean that utilities could earn a higher rate of return on unregulated cogeneration capacity than on their regulated central station capacity, and would compensate utilities more fully for accepting the business risks of investment in generating equipment over which they have little control (e.g., strikes, plant closings, or fuel interruptions at the cogeneration facility). Second, utility property is not eligible for the energy tax credit, and thus utilities would not gain the same cash flow advantages as private investors. Removing these disincentives would allow electric utilities to compete on at least an equal basis with other potential owners, and may give utilities a competitive advantage, and thus could substantially increase cogeneration's market potential.

However, full utility ownership raises concerns about competition and potential economic distortions. Utilities could favor their own (or their subsidiaries') projects through the duration or other terms of the purchase power contract, the inter-

connection requirements, or the priority for contracting. There is also a potential for utilities to cross-subsidize cogenerators through their other operations, making it difficult for private owners to compete, or for utilities to favor particular models and thus stifle competition among vendors. Each of these concerns can be dealt with either through carefully drafted legislation and regulations, or through careful review of utility ownership schemes by State regulatory commissions.

Publicly owned utilities also are logical candidates for investment in cogeneration capacity. Most publicly owned electric utilities purchase all or some of their power from the grid. investment in cogeneration capacity would enable them to add a new source of municipal revenue while increasing the reliability of their power supply. Moreover, many existing small municipal powerplants are sitting idle due to their high operating costs relative to the cost of grid-supplied power. These small plants could be retrofitted for cogeneration and the thermal energy used to meet local needs for such processes as grain drying or ethanol production. Municipal utilities also have advantages in financing because they are tax-exempt and so is the interest paid on their obligations.

Finally, joint ventures among any of the types of owners listed above or with third-party investors will be attractive, primarily due to the tax advantages. If the primary investor cannot take advantage of tax benefits such as credits or accelerated depreciation (e.g., because the investor is tax-exempt or has a low tax liability), the *cogen*eration equipment can be sold to another party for tax purposes only and leased back to the cogenerator or other owner.

WHAT ARE THE POTENTIAL EFFECTS OF THE PURPA INCENTIVES?

PURPA extends several important incentives to qualifying cogenerators (and small power producers). These include exemptions from electric utility or utility holding company regulation under Federal and State law and from some Federal fuel use and pricing regulations; incentive rates for sales of cogenerated electricity to the grid, and nondiscriminatory rates for purchases of backup or supplementary power from the grid; and special provisions on interconnection, and on wheeling of cogenerated power. All of these incentives are important because they could remove longstanding regulatory and economic barriers to onsite electricity generation. However, the rate provisions of PURPA are likely to have the most important impacts.

PURPA requires electric utilities to purchase power from cogenerators at a rate that does not exceed "the incremental cost to the electric utility of alternative electric energy." This is termed the utility's avoided cost, and is measured by the savings to the utility in not generating the power itself or purchasing it from the grid. Avoided cost rates are based on a cogenerators' contribution to power supply or peak load during daily or seasonal peak demands (including the reliability of that contribution from the utility's perspective); a credit for capacity and/or energy if the cogenerator enables the utility to defer new construction and decrease oil/gas use; and any costs or savings to the utility in transmission and distribution.

The level at which avoided cost rates will be set is uncertain at this time. The original FERC rules implementing PURPA provided for purchases of cogenerated power at 100 percent of the utility's avoided cost. This provision was challenged successfully on the grounds that PURPA established the full incremental cost as a rate ceiling, and that FERC had not adequately justified their choice of the highest permissible rate when a lower rate would share the economic benefits of cogeneration with the utility's ratepayers. FERC is appealing this ruling, but it may be months before a final decision is available and the regulations are rewritten, if necessary.

Regardless of whether the rates for purchases of cogenerated power are set at 100 percent of

avoided costs or less than 100 percent, these rates will vary widely regionally. In most cases, only those utilities that are heavily dependent on oil or gas, have a declining reserve margin, or are anticipating relatively high peak demand growth (e.g., 3 percent per year or greater) will have sufficiently high avoided costs to make grid-connected cogeneration an attractive investment (see table 4). Therefore, PURPA rate provisions are most likely to be an incentive to cogeneration in the New England States (especially Massachusetts, Rhode Island, New Hampshire, and Connecticut); the Mid-Atlantic States (particularly New York, New Jersey, and Delaware); the Southern and South-Central States of Florida, Mississippi, Arkansas, Louisiana, and Texas; and the State of California and the Pacific Northwest.

However, in each area, PURPA avoided cost incentives may be reduced by such factors as utility plans to convert to less costly generating capacity, or by conservation measures that reduce the rate of peak demand growth. Thus, if peak demand growth rates are not so high as those presented in table 4, then reserve margins would be higher than shown and avoided costs would be lower. Where avoided costs are low, a cogenerator may deliver its electricity to a more distant utility that would have higher avoided costs, if the local utility agrees to transmit the power.

PURPA economic incentives also can have important impacts on electric utilities and their customers—especially if cogenerated power is priced at 100 percent of the utility's avoided cost. Because the avoided cost rate is based on the cost to the utility of alternative electric power, the price of electricity for non-cogenerating customers should not be any higher than it would be if the utility did not make avoided cost payments to cogenerators (unless the State has established rates higher than the full avoided cost). However, neither will the price to those customers be any lower under 100-percent" avoided cost rates (except in those cases where utilities negotiate a contract price for cogenerated power that is less than the full avoided cost).

Moreover, even though utilities should treat cogenerated power as part of their overall capacity, they will not earn a rate of return on cogeneration equipment unless they own it. Under PURPA, cogenerators that are more than 50 percent utility-owned are not eligible for PURPA economic and regulatory incentives. If utilities could own cogeneration capacity outright and still benefit from those incentives, the avoided cost could become equivalent to the cost of cogenerated electricity or the cost of alternative power—whichever is lower. If the cost of cogenerated power were lower, utilities could pass this savings on to their non-cogenerating customers, while still earning a higher rate of return on unregulated cogenerators than the regulated return on their conventional capacity. Therefore, removing the ownership limits in PURPA could act as an incentive to utility investment in cogeneration, and thus increase the technology's market potential. However, utility ownership also raises concerns about possible anti-competitive effects (see, "Who Will Own Cogenerators?").

WHAT ARE THE POTENTIAL ECONOMIC IMPACTS OF COGENERATION ON ELECTRIC UTILITIES?

Cogeneration could have either beneficial or adverse economic impacts on electric utilities and their customers, depending on the choice of cogeneration technologies, their fuel use, and the type of utility capacity they might displace; on who owns the cogenerators; on the systems' operating characteristics; and on the price paid by utilities for cogenerated power. These potential impacts include decreased (or increased) costs of constructing and operating electric generating capacity, increased (or decreased) employment associated with electricity supply, and a decreased (or unchanged) rate of growth in electricity rates.

In order to gauge the potential magnitude of these economic impacts if cogeneration achieved a very large market penetration, OTA developed

Table 4.–Considerations in Determining Avoided Costs Under PURPA

Region[a]	Fuel used (percent)[b]		Reserve margin (percent)			Peak demand growth (percent)	
	Oil	Gas	1981	1990	2000	1981-1990	1991-2000
Northeast	45.4	52.9	43.8	43.7	24.2	1.9	2.1
Maine	16.0	—					
New Hampshire	38,3	—					
Vermont	—	—					
Massachusetts	80.0	—					
Rhode Island	75.4	24.1					
Connecticut	44.8	—					
New York	38.0	—					
Mid-Atlantic	17.4	2.1	31.6	29.1	25.6	2,4	1.9
Pennsylvania	—	—					
New Jersey	44.5	10.5					
Delaware	59.4	—					
Southeast	15.5	4.9	33.5	28.5	18.6	3.7	3.0
Virginia	39.5	—					
North Carolina	—	—					
South Carolina	—	—					
Georgia	—	—					
Florida	47.9	16.0					
Tennessee		—					
Alabama	—	—					
Mississippi	37.7	30.6					
East-Central	4.9	—	38.8	33.5	29.0	3.5	2.9
Maryland	23.8	—					
District of Columbia	100.0	—					
West Virginia	—	—					
Ohio	—	—					
Kentucky	—	—					
Indiana		—					
Michigan	10.7	—					
Midwest	4.8	2.9	19.4	18.4	14.7	2.9	3.2
Wisconsin	—	—					
Illinois	—	—					
Missouri	—	—					
North-Central	1.6	2.4	41.4	20.4	14.8	3.8	3.3
Minnesota	—	—					
North Dakota	—	—					
South Dakota	—	—					
Nebraska	—	—					
Iowa	—	—					
South-Central	5.3	70.4	25.4	19.7	17.6	4.0	**3.6**
Kansas	—	41.1					
Oklahoma		82.9					
Arkansas	27.0	15.5					
Louisiana	17.7	82.3					
Texas		73.2					
Western	15.7	14.4	30.1	34.3	25.6	3.5	2.8
Montana	—	—					
Colorado	—	12.5					
Wyoming		—					
New Mexico	—	26.3}	32.8	40.2	16.5	4.7	3.6
Arizona	—	13.5}					
Utah	—	—					
Idaho	—	—					
Oregon		—					
Washington	—	—					
California	40.6	28.8}	21.2	18.0	11.4	2.6	2.2
Nevada	—	26.0}					

aRegions correspond roughly to North American Electric Reliability Council regions.

bElectric utility fuel use of less than about IO percent is not included for individual States.

SOURCE: Office of Technology Assessment, from Edison Electric institute, Statlsflcal Yearbook *off the Electric Utility Industry:* 1980(Washington, D.C; Edison Electric Instltute,1981~ and North Amerlcan Electrlc Rellabillty council, *Electrlc Power Supply and Demand,* 1981-1990 (Princeton, N.J; North American Electric Reliabllity Council, July 198l)

48-946 0 - 84 - 4 : QL 3

six scenarios of cogeneration use that postulate penetrations of 50,000, 100,000, and 150,000 MW of cogeneration capacity by 2000 with two different technology mixes. We then compared the capital requirements, operation and maintenance (O&M) costs, and construction and O&M labor needs for these scenarios to those for installing an equivalent amount of central station baseload and peaking capacity (using two mixes for baseload capacity–loo percent coal and so/so coal and nuclear). In this comparison, OTA found that:

- capital requirements for cogeneration varied from around 95 percent less to about 25 percent more than the capital requirements for an equivalent amount of central station capacity;
- O&M costs for cogeneration ranged from approximately 75 percent less to about 95 percent more than the O&M costs for central station generation;
- construction labor requirements for cogeneration varied from around 45 percent less to approximately 70 percent more than those for constructing an equivalent amount of utility capacity; and
- O&M labor requirements, measured in work-hours per megawatthour, varied much more widely (e.g., 10 to several hundred times greater labor needs for cogeneration than for central station capacity).

In general, the wide variations in these results can be attributed to the economies of scale in the costs and labor needs for constructing and operating cogeneration capacity. Thus, total estimated cogeneration capital requirements are, on the average, lower than those for central station capacity, but may be slightly higher if all the cogenerators were very small systems with a high initial cost per kilowatt (e.g., 500-kW steam turbines, 75-kW diesels, 100-kW combustion turbines). Similarly, average estimated construction labor requirements for cogeneration range from about the same as those for installing conventional utility capacity to around so percent higher, and could be even greater when the smallest cogenerators (that require more work-hours per kilowatt of capacity) are installed. On the other hand, construction labor requirements for cogeneration may be lower than those for central station utility capacity if the largest cogenerators are used (e.g., 100-MW steam or combustion turbines, 30-MW diesels). For O&M costs, cogeneration tends to be more expensive for small systems and those with a higher capacity factor, and less expensive for large systems or those with a lower capacity factor. Finally, the O&M labor requirements for cogeneration are the most uncertain, primarily due to the lack of data in this area and because the economies of scale are even more pronounced.

Because the mean cost of cogenerated electricity tends to be lower than the marginal cost of electricity from new central station capacity, cogeneration may have the potential to reduce the rate of growth in retail electricity rates. That is, if utilities installed cogeneration capacity, lower costs would be passed on to their customers than if they installed conventional capacity. However, if utilities purchase cogenerated power at a rate based on their marginal, or full avoided costs, then the cost passed onto other customers would be equivalent to the cost of alternative electricity (i.e., either central station capacity or power supplied by the grid), and cogeneration would not reduce retail electricity rates, (see, “What Are the Potential Effects of the PURPA Incentives?”). Furthermore, where State regulatory actions provide for purchases of cogenerated power at rates that are even higher than full avoided costs (e.g., either because the State commission sets purchase power rates equivalent to the cost of oil and the utility uses a mix of fuels, or when the commission establishes an explicit subsidy rate), non-cogenerating ratepayers will be subsidizing cogeneration.

WHAT ARE THE ENVIRONMENTAL IMPACTS OF COGENERATION?

The primary environmental concern about cogeneration is the air quality impacts. In general, cogeneration does not appear to offer automatic air quality improvement or degradation compared to the separate production of electricity and thermal energy (see table s). Rather, each cogeneration application must be evaluated separately. Thus, cogeneration's greater fuel efficiency—when considered by itself—appears to offer a decrease in the total emissions associated with electric and thermal energy production, but, when evaluated in combination with the other changes associated with substituting cogeneration for conventional energy systems (including changes in the type of combustion equipment, its scale, and the type of fuel), may actually lead to an increase in total emissions.

Similarly, the location and technological characteristics of a cogenerator will affect ambient pollution concentrations and pollution dispersion. Cogeneration usually involves shifting emissions away from a few central powerplants with tall stacks to many dispersed facilities with lower stacks. In many situations, this shift will lead to local increases in annual average pollutant concentrations near the cogenerators. For urban cogenerators, total population exposure may increase because the emissions sources have been moved closer to densely populated areas. Also, air quality under certain meteorological conditions (such as low-level inversions) may be worse with cogeneration than with conventional separate electricity and thermal energy production. On the other hand, in some situations the "worst case" short-term pollutant concentrations caused by cogenerators will not be so high as the worst case concentrations associated with the facilities they displace. Moreover, if a cogenerator replaces several small furnaces or boilers then its air quality impacts can be positive.

Industrial and large-scale commercial cogeneration systems using steam or combustion turbines do not appear to present significant air quality problems in most situations. However, if the substitution of these cogeneration technologies for separate electric and thermal energy production also involves a switch from "clean" to "dirty" fuels (e.g., from distillate oil to high sulfur coal) then emissions could increase. Similarly, where a new steam or gas turbine cogenerator that primarily produces electricity is substituted for a new boiler or furnace, then the cogenerator could add significantly to local emissions.

Table 5.—Effect of Cogeneration Characteristics on Air Quaiity

Technological characteristic	Direct physical effect	Effect on air quality (positive or negative)
Increased efficiency	Reduction in fuel burned	Positive
Change in scale (usually smaller for electric generation, at times larger for heat/steam production)	Change in pollution control requirements (stringency increases with scale)	Negative for electric[a] Positive for heat
	Change in stack height and plume rise (increases with scale)	Negative for electric Positive for heat
	Changes in design, combustion control	Mixed
Changes in fuel combustion technology	Changes in emissions production, required controls, types of pollutants, physical exhaust parameters	Mixed
Change of fuels	Change in emissions production, type of pollutants	Mixed
Change of location (most often for electric generation)	Change in emissions density and distribution—electric power more distributed, heat/steam may become more centralized	Mixed

[a]The air quality effect of replacing the electric power component of the conventional system with the electric component of the cogeneration system is negative.

SOURCE: Office of Technology Assessment from material in ch. 6.

The use of diesel cogenerators (and gas-fired spark-ignition engines), however, generally will lead to increased levels of nitrogen oxide (NO_x) emissions at the cogenerator site, even after accounting for the displaced emissions from the separate electric and thermal energy sources. Available controls can reduce diesel NO_x emissions by nearly one-half, which mitigates but does not eliminate this problem. Diesels also emit potentially toxic particulate, but conclusive medical evidence of harm is lacking at this time, and the evidence that is available suggests that this hazard may not be critical.

Cogenerators' greater fuel efficiency can lead to an important environmental benefit through reduced exploration, extraction, refining/processing, and transportation of the fuel saved. However, this benefit is difficult to quantify and compare to the various air quality effects noted above. Furthermore, this benefit usually will occur only when the cogenerator uses the same fuel as the conventional energy systems it displaces. That is, if a fuel that is difficult to extract, process, and transport (e.g., coal) is substituted for a "cleaner" fuel (such as natural gas) the overall impacts may be adverse rather than beneficial.

The air quality concerns reviewed above mean that cogenerators—especially those in urban areas—must be designed and sited carefully. Most urban cogenerators are likely to be diesels or gas-fired spark-ignition engines, both of which have higher NO_x emissions than the systems they would replace. In urban areas with high NO_x concentrations, deployment of large numbers of cogenerators without pollution controls and careful siting could lead to violations of ambient air quality standards and increased risks of adverse health effects. There is considerable potential to mitigate these problems through proper site selection and engine design, and the use of available NO_x controls. For example, uncontrolled diesel NO_x emissions may vary by as much as a factor of 8 depending on the engine model and manufacturer, so appropriate engine choice alone might improve environmental acceptability significantly. However, there are no Federal emission standards for stationary diesel engines and the degree of risk from their deployment will depend on the effectiveness of State and local air quality permitting and management.

Proper siting and design also are important in avoiding the problems of "urban meteorology, " or the effect of tall buildings on air currents and, thus, on pollutant dispersion. Urban meteorology can cause plumes to downwash or to be trapped and recirculated in the artificial canyons created by urban buildings, and can therefore result in very high local pollution levels during certain wind conditions. Proper design and siting—especially ensuring that exhaust stacks are taller than surrounding buildings—can avoid air quality problems caused by urban meteorology. But the solutions may be costly in certain circumstances (e.g., when adjacent structures are much taller than the cogenerator's building), and may be ignored by developers unless there is a strong State or local permit review process.

Although potential air quality impacts are the primary environmental concern for cogeneration, water quality, solid waste, noise, and cooling tower drift also may be important. Water pollution can result from blowdown from boilers and wet cooling systems, and runoff from coal piles and from scrubber sludge and ash disposal. In urban areas, these effluents may have to be pretreated before discharge into the municipal treatment system. in addition, sludge and ash disposal may be a problem in urban areas due to the lack of secure disposal sites. Noise is also primarily an urban problem, but control measures are readily available. Finally, cooling tower drift can be a nuisance for those in the immediate area.

CHAPTER 2 REFERENCES

1. **Khalsa, P. S., and Stamets, L.,** ***Cornrnercial Status:*** *Electrical Generation and Non-generation Technologies* **(Sacramento, Calif.: California Energy Commission, April 1980).**
2. **Edison Electric Institute,** ***Statistical Y'earbook of the*** *Electric Utility Industry: 1980* **(Washington, D. C.: Edison Electric Institute, 1981).**
3. **Geller, Howard S.,** ***The Interconnection of Cogenerators and Small Power Producers to a Utility System*** **(Washington, D. C.: Office of the People's Counsel, February 1982).**
4. **North American Electric Reliability Council,** ***Electric Power Supply and Demand, 1981-1990*** **(Princeton, N.J.: North American Electric Reliability Council, July 1981).**
5. **Office of Technology Assessment, U.S. Congress,** *Application of Solar Technology to Today's Energy* ***Needs*** **(Washington D. C.: U.S. Government Printing Office, OTA-E-66, June 1978).**
6. **Office of Technology Assessment, U.S. Congress,** ***Synthetic Fuels for Transportation*** **(Washington, D. C.: U.S. Government Printing Ofllce, OTA-E-185, September 1982).**
7. **Resource Planning Associates,** ***Cogeneration: Technical Concepts, Trends, Prospects*** **(Washington, D. C.: U.S. Department of Energy, DOE-FFU-1 703, 1978).**

Chapter 3
Context for Cogeneration

Contents

Page

National Energy Context 49
Current Picture and Trends 49
Future Prospects 50
implications for Cogeneration 51
Conclusion 54

Electric Utilities Context 54
The Electric Power Industry 55
Current Status of Electric Utilities 72

Regulation and Financing of Cogeneration 76
Federal and State Regulation 76
Financing and Ownership 104

Chapter 3 References 112

Tables

Table No. Page

6. 1980 U.S. Energy Demand 50
7. Ratio of Annual Energy Demand to GNP Growth Rates. 50
8. Comparison of Energy Demand Projections 50
9. Thermal Energy Demand. 53
10. U.S. Electric Power System Statistics, 1980 55
11. installed Generating Capacity, by Type of Prime Mover 1978 61
12. Differences in Financing by Form of Ownership. 64
13. New Capacity Additions 65
14. Capital Structure for Private Utilities 65
15. Sources of Long-Term Financing to REA Electric Borrowers 66
16. Taxes Paid by investor-Owned Electric Utilities-Electric Department Only, 1980.. 67
17. Energy Property Eligible for ITC Under the Energy Tax Act of 1978.... 68
18. State Regulation of Utiiity Service and Operations.. 69
19. Rates for Power Purchased From Quality Facilities by State-Regulated Utilities 86
20. Capital Recovery Factors for Cogeneration 106

Figures

Figure No. Page

8. North American Electric Reliability Council Regions.. 58
9. The General Patterns of an Electric Power System 59
IO. Daily Load Shapes for Five Representative Weekdays 60
11. Typical Electric Distribution System 62
12. Allocation of Electricity Costs 63
13. Statewide Utility Resource Plan Additions 1981-82: Renewable/Innovative Technologies 91
14. CWE Average Avoided Cost Paths: Baseline Construction 95
15. Generic Paths for Average Avoided Costs 98

Chapter 3
Context for Cogeneration

Cogeneration has attracted widespread attention in recent years because of its potential for increased energy efficiency, and therefore, lower energy costs. A decision by an industrial concern, a commercial building owner, or a utility to invest in a cogeneration system will be based on an evaluation of the supply and price of fuel, regulatory considerations, the cost and availability of capital, tax incentives, and the technical, cost, and output characteristics of cogeneration relative to conventional separate electric and thermal energy systems. This chapter will review the institutional, regulatory, and financial context within which cogeneration must compete against conventional energy supplies, including the national energy context (supply of and demand for electricity and fuels), the structure and operations of the electric power industry (as they may affect a utility's choice of investing in a conventional baseload or peakload powerplant or in cogeneration), and the regulation and financing of cogeneration technologies. Subsequent chapters will describe cogeneration technologies and their cost and output characteristics, promising cogeneration applications in the industrial and commercial sectors and in rural areas, and the potential environmental and economic impacts of cogeneration.

NATIONAL ENERGY CONTEXT

Cogeneration systems could affect both the supply of and demand for fuels and electricity. The greater operating efficiency that can result from cogeneration's dual energy output could reduce the amount of fuel needed to supply electric and thermal energy for the industrial and commercial sectors. In many cases, depending on the fuel used by the cogenerator and by the utility capacity it would displace, the fuel saved with cogeneration could be oil or natural gas. Moreover, the widespread use of cogeneration could reduce the demand for electricity from central generating plants. In order to analyze these potential effects, it is first necessary to understand the current supply and demand picture for fuels and electric power—the national energy context in which cogenerators would operate.

This section discusses cogeneration with reference to the current and projected energy picture in the United States. First, the present energy situation and recent trends are reviewed briefly. Then, some projections of energy demand–particularly of electric and thermal demand in the industrial and commercial sectors—are discussed. In doing so, this section also briefly outlines some of the factors that could alter the energy picture in these sectors which, in turn, would affect the market penetration of cogeneration.

Current Picture and Trends

Table 6 presents 1980 U.S. energy demand by fuel and sector. Electricity is shown both as a demand and as a "fuel, " with losses distributed to each final demand sector.

Total energy demand in 1980 was 76.3 quadrillion Btu (Quads), a decline of 3.4 percent from the 1979 total of 79.0 Quads. The size of this decline—the largest annual drop in energy demand ever experienced by this country—was due in part to the very large increase in oil prices in 1979 and in part to investments in energy efficiency made as a result of the 1973-74 price rise. This can readily be seen by the 7.8-percent (2.9 Quads) decline in petroleum consumption from 1979 to 1980, and by the substantial decrease in the rate of growth in energy demand since the 1973 Arab oil embargo. Since 1973, overall U.S. energy demand has grown by approximately 0.8 percent annually, as compared with an average yearly growth of about 3.5 percent between 1950 and 1972. The most telling change in the overall U.S. energy growth picture, however, is that while energy growth has slowed dramatically, gross national product (GNP) has continued to grow at near historical rates. Table 7 shows the growth rates for both energy demand and GNP

Table 6.—1980 U.S. Energy Demand(Quads)

Fuel	Sector				
	Residential	Commercial	Industrial	Transportation	Electric utilities
Petroleum	2.05	2,34	8.88	17.99	3.00
Natural gas	5.91	1.92	8.41	0.60	3.79
Coal	0.10	0.10	3.35	—	12.12
Nuclear		—	—	—	2.70
Electricity	9.00	6,03	9.67	0.04	—
Hydro	—	—	—	—	3.09
Total	17.06	10.39	30.31	18.63	24.70

SOURCE: U.S. Department of Energy.

Table 7.—Ratio of Annual Energy Demand to GNP Growth Rates

Period	GNP rate (percent)	Energy demand rate (percent)	Ratio
1950-60	3.29	2.76	0.84
1960-70	3.85	4.24	1.10
1970-80	3.26	1.31	0.40

SOURCE: Office of Technology Assessment.

over the last three decades, as well as the ratio of energy demand to GNP growth rates for each of those decades. This latter measure indicates that a healthy economic growth rate can be sustained with a wide variety of energy growth rates, and demonstrates the conservation potential of the U.S. energy economy.

In addition to the cost effectiveness of conservation, other important national energy trends that have emerged during the past 8 years include the steady decline of domestic oil and natural gas production, and the increasing financial problems of electric utilities. The latter are, in large part, due to the large drop in electricity demand growth and the rapidly escalating costs of central station electricity generation. The unexpected rapid decline in the growth of electric energy demand (from 7.9 percent per year for 1950-72 to 3.5 percent annually for 1972-80) found most utilities with far greater capacity under construction than needed to meet the new growth. When it became evident that the lower growth rates were here to stay—in fact they might even get smaller—electric utilities deferred or canceled as much of their construction budget as they could. Many utilities were still left, however, with substantial excess capacity.

In addition, several factors combined to make new capacity much more expensive. These included longer construction times, increased environmental and regulatory review, higher interest rates, and high inflation. One major consequence of these considerations is that, in most cases, the marginal cost of new central station electricity now exceeds the average cost. As a result, electric utilities face severe financial problems, and those utilities that are experiencing demand growth or that need to displace oil-fired capacity may be unable to raise capital for any new plant construction (see "Electric Utilities Context," below).

Future Prospects

All energy demand projections show a continuation of the trend toward increased energy efficiency, although there is still considerable variation as to how much (see table 8). The range of the projections shown in table 8 is due principally to different assumptions about consumer responses to changes in energy prices. In all cases, however, these projections recognize that changes in demand will be the dominant factor in the energy future of the United States for the next few decades.

Table 8.—Comparison of Energy Demand projections (Quads)

Forecaster	1980	1990	2000
Energy Information Administration	76.3	87.0	102.5
Exxon	76.3	81.0	91.0
Edison Electric Institute	76.3	—	117.2
National Energy Policy Plan.	76.3	80-90	**90-110**

SOURCE: Office of Technology Assessment

Another trend mentioned above–the decline in domestic petroleum and natural gas production—also is very likely to continue. In a technical memorandum, World *Petroleum Availability: 79802000,* OTA estimated U.S. oil production at 4 million to 7 million barrels per day (MMB/D) by 2000 compared to today's 10.2 MMB/D (52). Exxon also has projected a drop to about 7.5 MMB/D in 2000 (26). The Energy Information Administration (EIA), on the other hand, projects a slight increase above today's level to about 10.9 MMB/D (23). Despite the rapid increase in drilling activity since 1979, OTA has not yet *seen* any evidence to contradict findings of a net decline of between 3 to 6 MMB/D by the end of the century.

Natural gas production is even more uncertain due to the existence of large quantities of unconventional gas (Devonian shale, tight sands, coal seam methane, and geopressurized brine). For most types of unconventional gas, the uncertainty is not so much the size of the resource base, but the production rates that can be obtained and the production cost. The available estimates currently center on total natural gas production of 15 trillion to 17 trillion cubic feet (TCF) per year in 2000 compared to 19.5 TCF for 1980. If the price of natural gas rises to that of world oil, however, these same estimates show production in 2000 to be approximately the same as it is today. In any case, there is little probability that the Nation will see a significant increase in domestic gas production, and such an increase is even less likely for oil.

Implications for Cogeneration

The Nation is confronted with a combination of circumstances that favor continued emphasis on different, less costly ways to generate electricity, and on increased efficiency in electricity use. These circumstances have led to a resurgence in interest in the cogeneration of electricity and thermal energy. The relatively small size of cogeneration units compared to central power stations may offer significant short-term advantages for financing new capacity. Cogenerators will take much less time to build than central station plants and they represent smaller capacity increments that would allow rapid adjustment to changes in demand. Moreover, because cogeneration units are installed at or close to the point of demand, most or all of the energy requirements of many industrial plants and commercial buildings could be provided onsite with the added possibility of generating electricity for distribution through the utility grid. Finally, cogenerators' ability to use fuel for two purposes (electricity and thermal energy) greatly increases the overall utilization efficiency of that fuel. Thus, where electric utilities project continued reliance on oil and gas due to the unavailability or infeasibility of other fuels, or where cogeneration systems can use alternate fuels, substantial oil or gas savings may result.

The technical advantages of cogeneration have always been available. It is the advent of the economic and energy supply and demand conditions described above that adds potential fuel economy, financial, and planning advantages for cogeneration compared to central station electricity generation and conventional thermal energy combustion systems. Whether these advantages will prove sufficient to accelerate the growth of cogeneration will be determined largely by the amount and character of demand for electricity and thermal energy in the commercial and industrial sector, and by the future financial health of the electric utility sector.

Electricity Supply and Demand

Perhaps the most critical factor in cogeneration economics is the demand for electric power. The Public Utility Regulatory Policies Act of 1978 offers economic and regulatory incentives to cogenerators that enable utilities to defer or cancel new powerplants and decrease oil and gas use. A zero or low growth in electricity demand, however, could undermine these incentives by reducing the need for cogenerated electricity and, therefore, reducing the economic attractiveness of cogeneration. Moreover, where the utility is primarily dependent on coal, nuclear, or hydroelectric plants, or where it plans to convert existing oil-fired capacity to alternate fuels, cogeneration will only be attractive if it also can use alternate fuels and can offer substantial financial advantages.

Currently there is considerable uncertainty about future electric power demand growth; the Solar Energy Research Institute (SERI) projected a 0.4 percent per year increase under their least cost approach (61), while the North American Electric Reliability Council (NERC) estimates a 2.9 percent annual growth rate (48). In terms of capacity requirements, the SERI projection could be met by 620 gigawatts (GW) of capacity operating at the current capacity factor of 45 percent. Further, SERI shows that 577 GW could be available in 1985 assuming completion of all plants scheduled to be on-line in 1985, and the retirement of all plants built before 1961 and of all oil and natural gas plants built between 1961-70 (61). Therefore, under the SERI least cost approach, very little new capacity would be needed past 1985, and any cogeneration added after that would be likely to substitute for electricity from existing coal, nuclear, or hydroelectric plants. Under the NERC case, however, capacity is projected to reach about 900 GW by 2000, an increase of 300 GW over present capacity. Even then, NERC estimates that the capacity factor would have to increase to 50 percent to meet their projected energy demand. Accounting for retirements and conversion of oil and natural gas, about 50 percent more new capacity would have to be added under NERC projections than now exists (49). In this case, cogeneration could have a very large market potential.

The future demand for electricity will be determined by the relative prices of electricity and competing fuels (including conservation measures), by the development of technologies that use electricity more efficiently (e.g., process equipment, appliances), and by consumers' perceptions about the stability of oil and natural gas resources. Currently, average electricity prices in the commercial sector are about 2.5 times distillate fuel oil prices and five times natural gas prices on a delivered Btu basis. * For industry, both of these price ratios are about 2 to 1. The ratios have decreased by 20 to 60 percent from those in 1970, however.

*As will be discussed below, differences in end use efficiency between equipment using electricity and that using natural gas or fuel oil make price comparison on a delivered Btu basis alone, incomplete.

Continuation of the low rate of growth in electricity demand, coupled with the current excess of generating capacity, may keep the rate of growth in electricity prices rather low over the next several years. If prices do remain somewhat stable, then the difference between electricity prices and oil and gas prices would be likely to become even smaller. However, the current decline in the real price of oil could alter this trend. Furthermore, if the oil price decline continues for the next few years, natural gas price increases following decontrol also are not likely to be so dramatic as originally thought. Therefore, the ratio of electricity prices to oil and natural gas prices would not decline for some time. At this point, it is most likely that the ratio will decline, although more slowly that previously anticipated. The price trajectories used in the analysis of commercial cogeneration in chapter 5 also project that the ratio will become smaller.

Such growth rates would continue the trend toward price closure between electricity and natural gas or distillate fuel oil. If these trends are combined with the development of technologies for buildings and industry that use electricity more efficiently than equivalent oil or natural gas burning technologies that provide the same services (e.g., space heating, reheating of finished metals), the costs of providing these services with electricity could become lower than with oil or natural gas. For example, in many areas, efficient electric heat pumps can provide space heating more economically than oil furnaces. There are even a few regions where space heating with electric heat pumps is cheaper than with natural gas furnaces.

Natural gas and oil are the primary energy sources for industrial processes, supplying both direct heat (such as catalyzing chemical reactions and heat treating) and process steam. The major use of electricity in industry is to run motors. Whether technologies that use electricity could economically replace direct heat or process steam in industry is much less certain than in the commercial sector. Some possibilities include microwave, infrared, or dielectric heating, very efficient electric motors for replacing steam mechanical drives, and pulsed current devices for surface reheating of metals.

It is possible, then, that the growth of electricity demand could increase sharply toward the end of the decade. * However, the extent of any increase in industrial or commercial demand will depend on the size of the dollar savings achieved by switching to electricity relative to the required capital investment. Conversion is much more likely for new buildings and plants than for existing facilities. Therefore, unless there is significant new development in energy intensive industries for which more economical electric technologies are available and accepted, the growth rate of industrial use of electricity is not likely to change substantially for the remainder of the century.

It is this uncertainty of future demand that provides a potentially important role for cogeneration. If electricity use in buildings and industry did increase substantially, electric utilities could be strained financially if they tried to meet the increased demand with new central station capacity. Further, attempts to accommodate demand growth with central station capacity could lead to a rapid increase in electricity prices. This is because the marginal cost of electricity—the cost of a new plant—is often considerably higher than the average cost. Therefore, as new capacity becomes a larger fraction of the total electric utility plant, the average cost will grow closer to the marginal cost. Cogeneration could help alleviate these pressures, particularly in the first years of an increase in demand. The small size of cogeneration systems would allow rapid and fairly precise matching of supply and demand, and with much smaller increments of capital. This would greatly reduce the risk of building excess capacity or having to defer or cancel capacity under construction should demand growth suddenly slow or stop. Moreover, because cogeneration supplies thermal energy, it could at least partially offset increases in electricity demand due to a rapid rise in the use of electric heating. Cogeneration's competitiveness would then turn on the difference between the cost of purchasing electricity plus supplying heat, and the fuel and operating and maintenance costs of a cogeneration system. Finally, the avoidance of extensive new additions to transmission and distribution systems also might alleviate some of the electric utilities' capital problems.

However, if utilities are able to raise capital easily, or if demand does not increase in the face of stable prices, central station powerplants fueled with coal, uranium, or hydropower may be preferred to oil- or gas-fired cogeneration systems. These alternate energy sources probably would be cheaper than the oil or natural gas likely to be used in most cogeneration systems in the near term. Therefore central station electricity—even with a substantially larger capital cost per kilowatt than cogeneration capacity—is likely to be cheaper than cogenerated electricity despite cogeneration's higher overall fuel efficiency.

Thermal Energy Demand

The second major influence on the growth of cogeneration is future thermal energy demand in buildings (space and water heat) and industry (direct heat and process steam). We have already discussed how some of this future load may be met by electricity rather than by direct combustion of fossil fuels. In addition, available conservation opportunities will slow thermal demand growth and could even reduce thermal energy use (by 2000) from the 1980 levels. Conservation will affect electricity use as well, and even if significant conversion from other fuels to electricity (as discussed above) does occur, electricity demand growth in these sectors still could be kept low. Table 9 shows two estimates of direct combustion heat requirements for commercial buildings and industry for 2000 compared to 1978. As can be seen, current thermal demand in industry is more than twice that of commercial buildings. Moreover, under either the EIA or the SERI projection, the difference would become even more pronounced.

Table 9.—Thermal Energy Demand (Quads)

	Buildings	Industry	
Year	Space/water heat	Direct *heat*	*Steam*
1978 ....., ...	4.5	3.8	6.8
2000 (EIA)	3.8	5.0	9.3
2000 (SERII	1.6	3.7	6.6

SOURCE: Office of Technology Assessment

*The extent to which electricity can be substituted economically for other energy sources in buildings and industry will be examined in detail in forthcoming OTA studies on oil disruption and on electric utilities.

The SERI estimates in table 9 are based on a least cost approach using conservation technologies that cost the equivalent of up to the 1980 average cost of oil and electricity ($7.50/MMBtu and $.057/kWh respectively) (60). The EIA projections are derived from economic and engineering models and reflect judgments about actual consumer response to changing energy prices (22). In either case, cost-effective conservation opportunities for commercial buildings could reduce fuel requirements for space and water heating from 15 to 65 percent. For industry, EIA estimates a 37-percent increase in steam growth while SERI projects a 3-percent decrease (see the section on "Industrial Cogeneration Opportunities" in chapter 5 for an analysis of steam growth projections).

These analyses indicate that cogeneration will have greater potential in the industrial sector than in commercial buildings as far as supplying thermal energy is concerned. Both EIA and SERI analyses imply that in the commercial buildings sector, cogeneration will have to compete with central station electricity and with fuel freed by conservation in meeting future space and water heating demand. When the low load factor inherent in buildings' heat load is added, the economic potential of cogeneration is decreased further (see ch. 5). In essence, conservation can considerably reduce the opportunity to take advantage of cogeneration's high fuel utilization efficiency.

The air-conditioning demand of buildings also offers a potential market for thermal energy from cogeneration. In 1980, over 98 percent of all commercial air-conditioning was electric. For these buildings, the use of cogenerated steam for cooling would require conversion to either absorption units or steam-driven compressors. Where it is economic to do so, such conversion would increase the baseload steam demand and therefore the building's thermal load factor. By 2000, SERI and EIA project cooling demands of 2 and 4 Quads of primary energy, respectively.

Conclusion

The attractiveness of cogeneration will depend, to a large extent, on energy demand in the commercial and industrial sectors, on the balance between thermal and electric loads, and on the overall demand for electricity. These, in turn, depend heavily on the price of energy–particularly the relative prices of electricity, distillate fuel oil, and natural gas. It is fairly certain that energy demand will grow much more slowly than in the past. The range of possible growth rates, however, is large. Lower growth rates, while not necessarily changing the economics of cogeneration, will clearly reduce the potential market as well as the net fuel savings. Further, a very low growth rate for electricity is likely to dampen price increases and reduce the price paid by utilities for cogenerated power, both of which would reduce the economic attractiveness of cogeneration. However, the uncertainty of future electricity demand and the economic problems caused by a severe mismatch between load growth and capacity growth make small capacity additions potentially very desirable in the short term. Therefore, while conservation through increased efficiency is likely to be the most economic route to choose for at least the next several years, there appears to be a potential role for cogeneration, particularly in the industrial sector where thermal and electrical demands are likely to remain large.

ELECTRIC UTILITIES CONTEXT

Future supply of and demand for energy and electricity, as discussed above, will be a major factor in determining the role cogeneration will play in the Nation's energy future. Equally important in defining that role will be the electric power industry. Cogeneration systems may be owned and operated by electric utilities, or they may be installed by former utility customers who now provide some or all of their own electric power needs and who may even supply power to the utility. In this context, cogeneration must compete, both technologically and economically,

with well established electric and thermal energy conversion and distribution systems as well as with alternate energy forms and conservation. The elements of this competition—both on a site-specific and a national energy policy basis—will be wide ranging, encompassing the technological, fuel use, and institutional characteristics of the electric power industry, as well as the financing, regulation, and operations of technologies that supply energy for commercial and industrial applications.

This section will review the general electric utility context within which cogeneration systems will compete. The following section of this chapter will analyze the present institutional and regulatory context specific to cogeneration.

The Electric Power Industry

Current operations of electric utility systems are diverse, encompassing a wide range of technical and institutional configurations. These include the number, size, and type of generating plants; the amount of electricity consumed by customer classes and their regional load profiles; and the different types of institutions that supply power, coordinate specific utility functions, and regulate the power industry. Support activities include the production and acquisition of fuel supply and of the necessary equipment for fuel handling and storage, and for electricity generation, transmission, distribution, and consumption.

A wide array of institutions has evolved to perform the functions listed above. The U.S. electric power supply system is composed of over 3,400 separate entities, including private, public, and cooperative utilities, joint action agencies, Federal power agencies, power pools, and electric reliability councils. In 1980, these systems had 619,050 megawatts (MW) of installed generating capacity to supply close to 93 million customers with about 2.3 trillion kilowatthours (kWh) of electricity (see table 10) (55). The utilities in the electric power system obtain financing from a variety of sources including banks, insurance companies, traditional stock and bond markets, and Federal programs; their financial and technical operations are regulated at the Federal, State, and local level. Finally, both the production and consumption of electricity are supported by innumerable institutions that manufacture, distribute, install, and service equipment, tools, and appliances. All of these factors together make the electric utility industry the largest in the United States in terms of capital assets and issuance of stocks and bonds.

Utility Organizations

The organizations that supply electricity in the United States include private or investor-owned utility companies; publicly owned utilities such as State, county, or municipal systems, and Federal power agencies; rural electric cooperatives; joint ownership organizations; and groups of utilities that coordinate their operations to improve efficiency and reliability.

Private utiiities are owned by their investors and generally are granted territorial franchises by State or local governments. Most investor-owned utilities (IOUS) generate their own electricity, and some are part of vertically integrated corporations that own their fuel supply (e.g., "captive" coal mines) or other support activities.

Table 1O.–U.S. Electric Power System Statistics, 1980

Type of system (and number)	Installed capacity		kWh generation		Customers		Electric operating revenues		Net electric plant investment	
	Megawatts	Percent	Millions of kWh	Percent	Number	Percent	Millions of dollars	Percent	Millions of dollars	Percent
Local public systems (2,248)	67,568	10.9	204,880	9.0	12,467,700	13.5	$12,224	10.8	$34,100	11.9
Privately owned systems (217)	476,979	77.1	1,782,545	78.0	70,620,300	76.2	87,062	76.9	207,555	72.4
Rural electric cooperatives (924)	15,425	2.5	63,557	2.8	9,523,600	10.3	9,707	8.6	23,892	8.3
Federal power agencies (8)	59,078	9.5	235,051	10.3	13,300	0.01	4,238	3.7	21,100	7.3
Total	619,050	100.0	2,266,033	100.0	92,624,900	100.0	$113,231	100.0	$286,647	100.0

aDoes not include nuclear fuel.

SOURCE: Office of Technology Assessment from "Public Power Directory," Publlc Power, January-February 1982.

IOU companies dominate power generation in the United States today. The 217 IOUS represent about 6 percent of the total number of utilities, but those 217 own approximately 77 percent of all installed generating capacity and generate about 78 percent of the electricity produced (see table 10). In 1977, approximately two-thirds of the IOUS had a peak demand in excess of 100 MW, and about 12 percent had a peak demand greater then 3,000 MW (21). Because of the capital intensity of the electric utility industry, with total operating revenues of over $113 billion in 1980 and net electric plant investment of over $286 billion, the domination of the industry by a relatively few IOUS means that they also determine the role of utilities in financial and other markets.

publicly owned utilities include municipal, public utility districts, and State and county systems. The authority to establish a public utility derives from the State government, and a few States (e.g., New York, Nebraska) currently have their own systems. However, most States have delegated this authority to county or municipal governments.

The relatively large number of publicly owned utilities, in contrast to their small share of the electricity market (see table 10), reflects their small size. Most of these systems only purchase wholesale power and distribute it to their customers; those municipal that do generate have very small loads (fewer than 100 publicly owned utilities have peak demands in excess of 100 MW) (21). Roughly 71 percent of the local public power systems purchase all their electricity, while about 6 percent own sufficient generating capacity to supply all their needs. The remaining 23 percent of public utilities generate some portion of their needs and purchase the remainder (55).

Cooperative utilities represent a different type of public ownership. The co-ops are nonprofit economic entities that are owned and managed by their customer members. Members' shares in the co-op may be plowed back into the operation and/or expansion of the business as patronage capital in order to keep the cost of co-op service as low as possible, or the patronage capital may be "rotated"—essentially paid out as dividends–if the co-op's equity ratio is 40 percent or higher.

Rural electric co-ops comprise a vast operating network of over 900 local and regional electric systems in 46 States which own and maintain nearly 44 percent of the Nation's electric distribution lines, and whose service territories encompass 75 percent of the land area of the United States. The rural electric system is a two-tiered operation, including 870 local distribution co-ops and 54 generation and transmission co-ops (G&Ts). The 870 local co-ops purchase electricity and distribute it to their own rural customers, while G&Ts generate and/or transmit electricity primarily for local distribution co-ops. Some G&Ts also sell electricity wholesale to municipal and IOUS, while distribution co-ops may purchase power from a combination of sources, including G&Ts, Federal power agencies, and IOUS (16).

Still another form of public utility ownership is represented by Federal power marketing agencies. The Federal role in electricity generation dates back to the Reclamation Act of 1906, which empowered the Bureau of Reclamation to produce electricity in conjunction with Federal irrigation projects, and to dispose of any surplus power to municipal utilities (39). The second Federal power marketing agency was the Tennessee Valley Authority (TVA), which was established in 1933 as a multipurpose river project with responsibility for flood control, regional development, hydroelectric power generation, and other activities. Today, it is the single largest electric utility in the country, with a total system capacity of over 31,000 MW. Approximately 65 percent of TVA's sales are at wholesale to municipal utilities and rural electric co-ops. The remainder is sold to private industries, other Federal agencies, and private power companies (55).

Other Federal power agencies include the Bonneville Power Administration, which was established in 1937 and which markets power from hydroelectric projects constructed by the Army Corps of Engineers and the Bureau of Reclamation in the Columbia River Basin and operates the Nation's largest network of long-distance high-voltage transmission lines; the Southwestern Power Administration, which was set up in 1944

to market power from Corps of Engineers projects in Arkansas, Missouri, Oklahoma, and Texas; the Southeastern Power Administration, created in 1950 to market power from Corps projects in 10 Southeastern States; the Alaska Power Administration, established in 1967 to operate and market power from Federal hydroelectric projects in Alaska; and the Western Area Power Administration, which was set up in 1977 and incorporates Federal power marketing and transmission functions formerly performed by the Bureau of Reclamation and markets power from a number of Corps hydroelectric projects (55).

A hybrid form of public ownership is the joint action agency, in which two or more public power systems pool their plans to purchase power or to finance total or partial ownership of generation and/or transmission systems. Where the local public utility system is no longer adequate or economical and low-cost Federal power is not available, joint action agencies can place public power systems in a more advantageous cost and supply position, allowing even the smallest electric utilities to realize economies of scale (4). Joint action may also provide publicly owned utilities with more flexibility in choosing fuels and types of generating capacity while avoiding the risks of a single-shot investment in one plant. IOUS may choose to participate in joint action agencies to reduce plant construction costs or to obtain lower cost financing (32).

Joint action agencies are authorized by State legislation and membership arrangements vary. They may include statewide areas (e.g., Municipal Electric Authority of Georgia), correspond to IOU service areas (such as in North Carolina, which has three agencies, one for each of the State's major IOUS), or be determined according to both geography and perceived mutual interests (e.g., the five Minnesota organizations). Some joint action agencies, such as the Missouri Basin Municipal Power Agency, have members from several States. As such, they cannot finance projects themselves but must rely on the members' funding abilities. In 1981, there were 49 publicly owned joint action agencies in 31 States (55).

Since the 1920's, all the types of utility systems described above have been interconnected and their operations coordinated to some degree in order to reduce costs by increasing the productivity of the resources employed in the generation and transmission of electricity, and to improve reliability by applying the combined resources of several systems to a contingency on any one. These intersystem agreements now comprise approximately 20 formal organizations known as power pools. The degree of coordination among utilities in power pools can range from very loose agreements for exchanges of energy; to some coordination of planning, construction, operation, and capacity reserves; to complete integration with joint planning on a single system basis, centralized dispatch of generating facilities, and strict contractual requirements for generating capacity and operating reserves (29).

In general, the potential economic benefits of pooling include reduced investment costs through economies of scale in building larger generating units and through lower reserve margins that result from reducing the ratio of generating unit size to combined system peakload; greater operating economies through increased load diversity, reduced operating costs per unit output for larger plants, and fuller use of the lowest cost capacity available on the system; and increased savings through coordinated construction programs that minimize the costs of temporary excess capacity that may result from the addition of large generating plants. The potential reliability benefits of power pools derive from access to support from other systems, and may be realized either through a reduction in reserves needed to achieve a certain level of reliability or through an increase in the level of reliability of the coordinated systems (29).

Electric reliability councils represent a second form of coordination among utilities. A Federal Power Commission (FPC) investigation of the 1965 blackout in the Northeast stressed the need for greater reliability and coordination among electric utility companies. In response to FPC findings, NERC and nine regional councils *were* formed in the late 1960's (see fig. 8), representing about 95 percent of the Nation's generating capacity. Each regional council consists of a rep-

Figure 8.—North American Electric Reliability Council Regions



ECAR	East Central Area Reliability Coordination Agreement	MAIN	Mid-America Interpool Network	SERC	Southeastern Electric Reliability Council
ERCOT	Electric Reliability Council of Texas	MARCA	Mid-Continent Area Reliability Coordination Agreement	SPP	Southwest Power Pool
MAAC	Mid-Atlantic Area Council	NPCC	Northeast Power Coordinating Council	WSCC	Western Systems Coordinating Council

SOURCE: North American Electric Reliability Council.

resentative from each of the major utilities in the region and from groups of small utilities in some regions.

The regional councils develop voluntary standards for those aspects of bulk power supply that affect the regionwide reliability of service (e.g., design criteria for transmission facilities). NERC aids in the coordination of policy issues among the regional councils, and provides industry information, comment, and recommendations about the reliability and adequacy of bulk power supply at the national level. In addition, NERC is responsible for the development and maintenance of nationwide standards for interconnected operation (18).

Technical Aspects of the Utility industry

A conventional power system can be described as the coordinated operation of generating units, high-voltage transmission lines, and subtransmission and distribution networks. Figure 9 shows a typical power system structure.

The primary consideration in an electric power system is to serve the electric loads, or power requirements, in a given area or region. The power

Figure 9.—The Generai Patterns of an Eiectric Power System

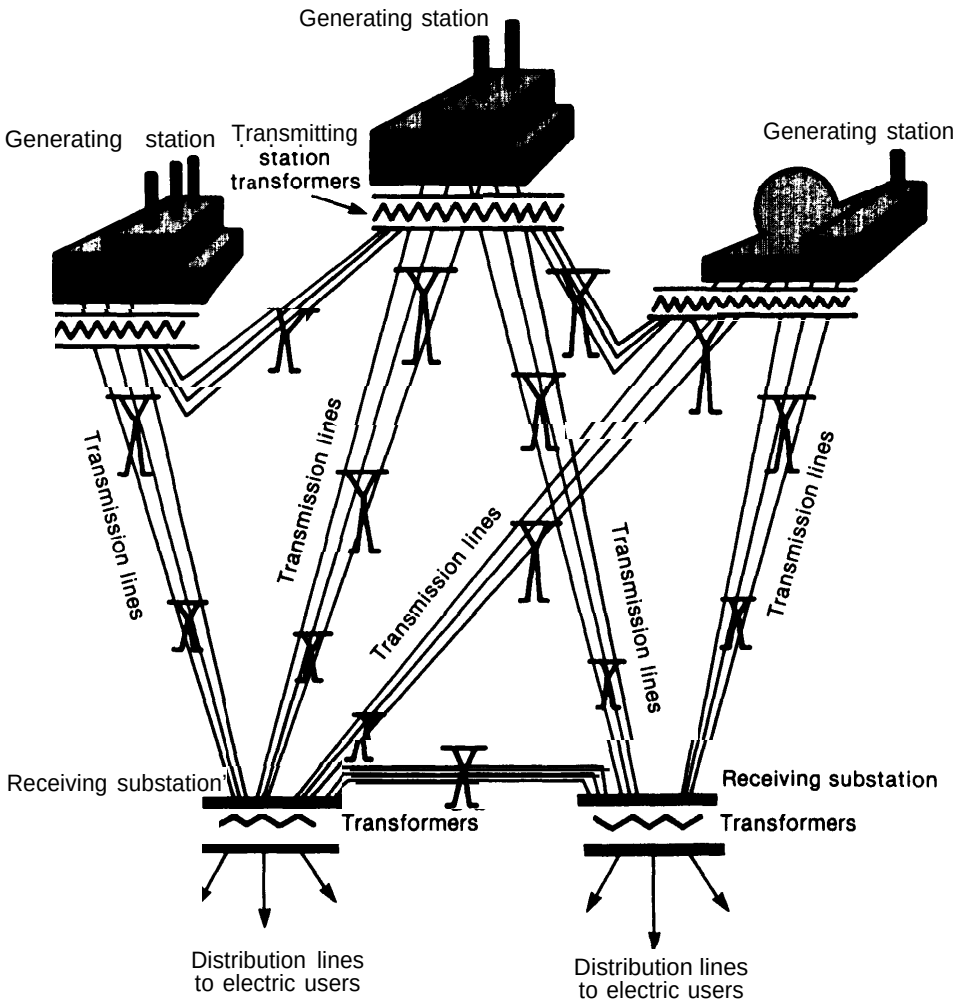

SOURCE: Economic Regulatory Administration, *The National Power Grid Study, Volume //(Washington,* D. C.: U.S. Department of Energy, DOE/ERA-0056-2, September 1979).

requirements include all devices or equipment that convert electricity into light, heat, or mechanical energy, or otherwise consume electricity (e.g., aluminum reduction), or the requirements of electronic and control devices. The total load on any power system is seldom constant; rather it varies with hourly, daily, seasonal, and annual changes in the service area's requirements (see fig. 10). The minimum system load for a given period is termed the baseload, while maximum requirements (usually resulting from temporary conditions) are called peakloads. Because electric energy currently cannot be stored in large quantities, generating plant operations must be coordinated closely with fluctuations in the load, and large utility systems usually have separate generating plants sized to meet base, intermediate, and peakloads.

Table 11 shows the current U.S. generating capacity by type of prime mover. The choice of capacity type is a function of service needs, economic and financial considerations, resource constraints (e.g., fuel, land, water), potential environmental impacts, future growth, politics, regulatory requirements, and management prefer-

Figure 10.—Daily Load Shapes for Five Representative Weekdays (North Central Region, 1980)

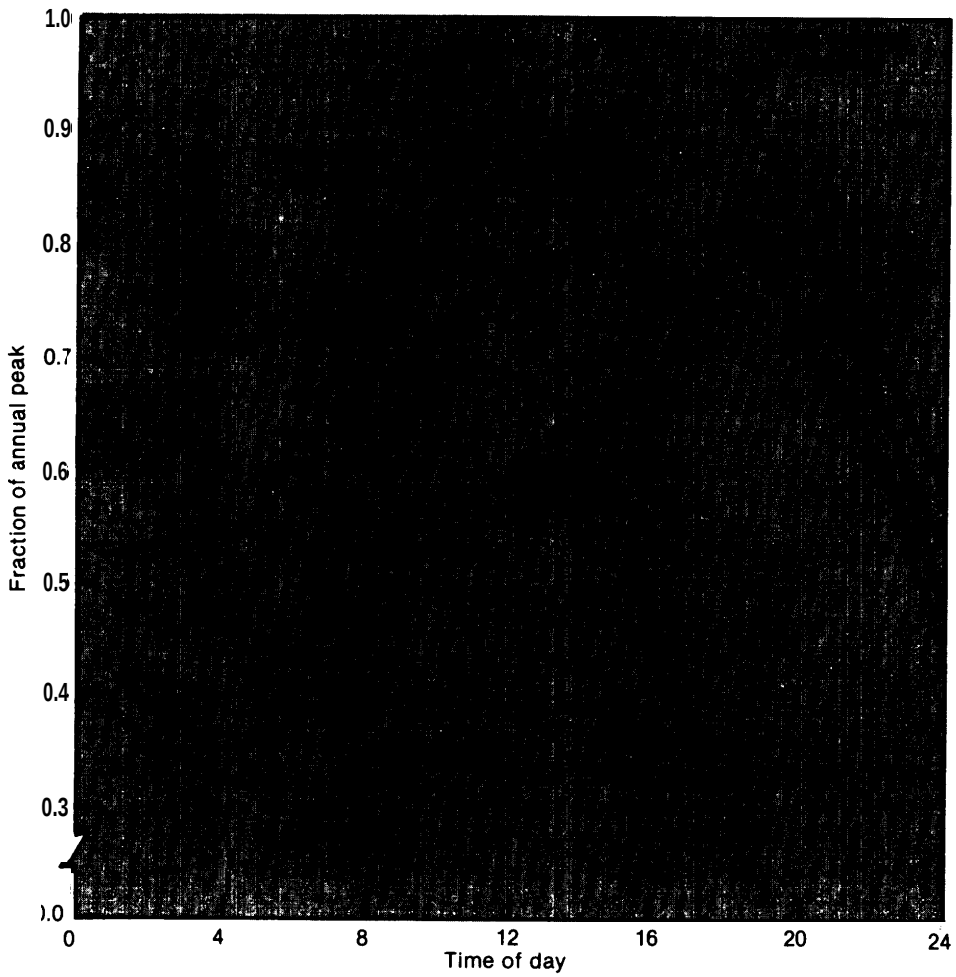

SOURCE: Decision Focus, Inc., *Evacuation of the Economic Benefits of Decentralized Electric Generating Equipment Connected to a Utility Grid* (contractor report to OTA, October 19S0).

Table 11.–Installed Generating Capacity, by Type of Prime Mover, 1978

	Total		Hydroelectric		Conventional steam		Nuclear steam		Internal combustion	
	Thousands of kilowatts	Percent	Thousands of kW	Percent	Thousands of kW	Percent	Thousands of kW	Percent	Thousands of kilowatts	Percent
Investor-owned utilities	453,647	76	23,847	4	383,024	66	44,984	8	1,792	< 1
Municipal utilities	34,426	6	4,694	< 1	25,511	4	963	< 1	3,258	< 1
State systems and publlc utility dlstrlcts	25,322	4	11,975	2	9,245	2	4,059	< 1	43	< 1
Rural electric cooperatives	11,635	2		<1	11,073	2		< 1	430	< 1
Federal	54,282	9	30,431	5	20,376	4	3,456	< 1	17	< 1
Total	579,312	100	71,014	12	449,231	78	53,527	9	5,540	1

SOURCE: Edison Electric Institute, Statistical *Yearbook of the Electric Utility Industry, 1980* (Washington, D. C.: Edison Electric Institute, November 1981).

ences. In general, fossil and nuclear fueled steam plants and many hydroelectric facilities are used for baseload and intermediate-load generation while some hydro equipment (usually pumped storage) and combustion turbines are used to supply peaking power.

The trend in recent years has been to construct large baseload plants in order to capture economies of scale. Nuclear plants usually exceed 1,000 MW in nameplate capacity and most of the existing fossil steam plants are larger than 5oo MW. However, as capital costs and construction times increase and it becomes more difficult to finance large powerplants, some utilities are turning to smaller equipment that may use unconventional fuels. Where the service needs are not expected to grow rapidly, small units such as cogenerators may improve load factors while alleviating utility financial problems in the short term, although their longer term financial and system planning advantages are uncertain (see ch. 6).

In order to serve the electric loads of an area adequately, a utility must plan not only for baseloads and peakloads, but also for system reliability during scheduled and unscheduled outages (e.g., equipment maintenance, storm damage) and for demand growth. To some degree, system reliability can be achieved through interconnections with other utilities (i.e., power pooling), but utilities also must incorporate reserve margins into their planning. Reserve margins are the installed available capacity in excess of that needed to meet the system's peak demand when due consideration is given to maintenance requirements, random equipment failure, or other contingencies. The amount of reserve capacity required in a given situation depends on the reliability criterion, the behavior of individual generators, the unit size mix, and the interconnection support available. The usual planning procedure is to specify a reliability level or loss of load probability, such as an expected deficiency of 1 day in 10 years, and optimize capacity expansion so that this criterion is always met (3 S). The accepted industry minimum value is about 20 percent. In 1979, the average reserve margin for IOUS was around 36 percent of peakload (20). Some utilities have reserve margins above so percent, while others are below 10 percent.

Once electricity has been generated, its voltage is stepped up with power transformers and it is transmitted to the load center. High-voltage transmission lines (69 kilovolts (kV) and above) are used to transfer bulk power from the generating plant to a substation or bulk purchaser, and to interconnect utility systems for greater efficiency and reliability. Such lines are built to accommodate power flows in either direction in order to facilitate interconnection among systems.

After the bulk power has been transmitted to the demand center, it goes into the distribution system, which supplies electric energy to the individual user or consumer. The distribution system includes the primary circuits and the distribution substations that supply them; the distribution transformers; the secondary circuits, including the services to the consumer; and appropriate protective and control devices (see fig. 11). A transmission substation transforms power to subtransmission voltage (below 69 kV). It is then distributed to various distribution substations, load substations, and distribution transformers, where the voltage is stepped down further to match residential, commercial, and industrial needs. Once the electricity enters a local distribu-

Figure 11.—Typicai Eiectric Distribution System (three.phase)

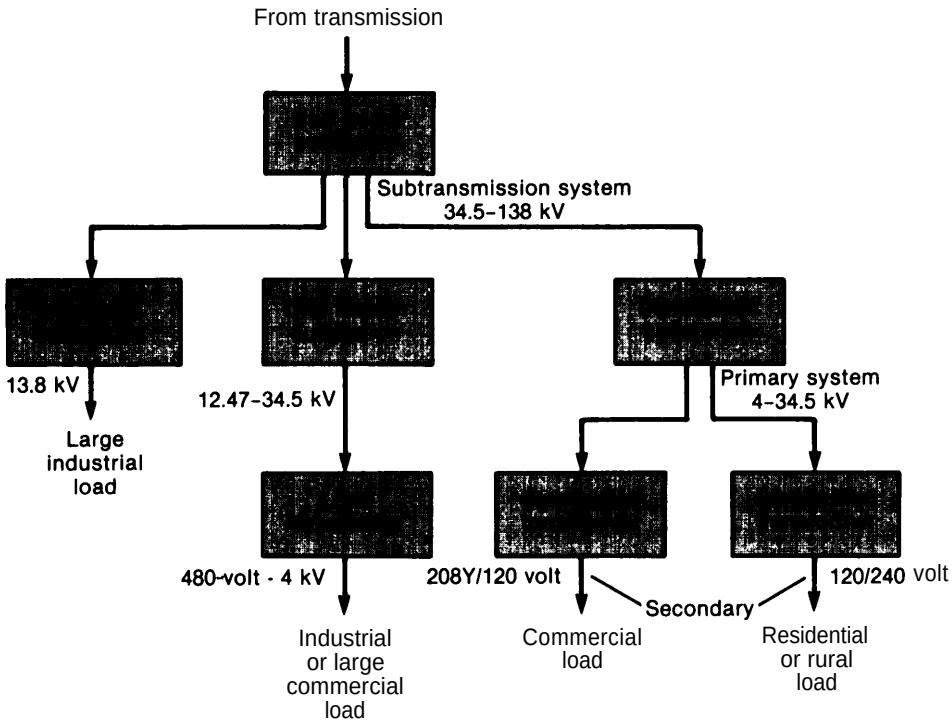

SOURCE: *McGraw-Hill Encyclopedla of Energy (New* York: McGraw-Hill Book Co., 1976).

tion system, the power usually only flows one way in order to protect electrical workers and equipment. Special equipment is thus needed for onsite generators that feed power back to the grid (see discussion of interconnection in ch. 4).

Economic and Regulatory Aspects of Utility Systems

Electric utilities are among the most capital-intensive and highly regulated industries in the United States, and the two aspects of the industry are integrally related. The rates charged for service-as determined by State or Federal regulation—are the primary factor in utility economics. But the economics of electric power supply and demand also may be affected by financing and its regulation as well as by regulation of utility services and operations. These aspects of utility regulation and their effects on the production and consumption of electricity—and thus on the potential role of cogeneration—are discussed below.

UTILITY RATES

In exchange for the privilege of operating as a natural monopoly, utility practices are regulated in the public interest. The primary form of such regulation is the determination of the rates utilities can charge for their services. State public service commissions (PSCS) traditionally have controlled rates for intrastate sales of electricity, while the Federal Government has had jurisdiction over sales for resale in interstate commerce since 1935.

State Regulation.–Each of the States (except Nebraska, where all electricity is supplied through a State-owned and operated utility system) has a PSC established by law to regulate utilities. The degree of State regulation varies. Ail PSCS regulate the rates of IOUS, while 19 commissions have some authority over publicly owned utility rates, and 29 regulate cooperatives (30). Where the PSC does not have such authority, public utilities are self-regulating through the municipal or county government.

Determining the rates a utility charges for its services is a two-step process. The PSC must decide first, how much money the utility needs (the revenue requirement) and second, how those funds will be collected (the rate structure or rate schedule). A utility's revenue requirement is the total number of dollars required to cover its operating expenses and to provide a fair profit. The revenue requirement is usually expressed in formula form as follows:

$$RR = E + d + T + (V - D) R$$

in which

- RR = revenue requirement
- E = operating expenses
- d = annual depreciation expense
- T = taxes, including income taxes
- V = gross valuation of the property serving the public
- D = accrued depreciation
- R = rate of return (a percentage)
- (V – D) = rate base (net valuation)
- (V – D) R = profit, expressed as earnings on the rate base, plus interest on debt (53).

The **rate schedule allocates the revenue requirement among a utility's customers. The problem of cost allocation arises because most electricity is produced in jointly utilized equipment and its cost must be assigned to the customer classes involved (36). First, costs directly attributable to a particular class or customer (e.g., the distribution line from a substation to a factory) are identified and segregated. Second, the remaining costs are arranged so that they can be apportioned among the various groups of customers jointly responsible. Third, those costs are distributed in accordance with some physically measurable attribute of the customer class.**

in accomplishing the last two steps, costs are arranged according to function (such as production, transmission, and distribution), and then either assigned to demand, energy, or customer cost categories, or simply classified as fixed or variable (see fig. 12). Demand costs (the fixed rate base and expense items related to peak or average demand) are generally the most difficult to allocate and have become controversial in the setting of rates for backup service to cogenerators (see discussion of rates in next section). Energy costs can be directly allocated to customer classes based on the number of kilowatt-hours consumed by the group, and thus do not pose a problem (36).

Federal Regulation.–Federal regulation of electricity prices began in 1920 with the authority to set rates for interstate sales of power from federally licensed hydroelectric projects. The financial abuses of the 1920's and early 1930's, however, revealed a need for a more extensive national role, and the Federal Power Act of 1935 expanded Federal jurisdiction to include all sales of electric energy at wholesale in interstate com-

Figure 12.–Allocation of Electricity Costs

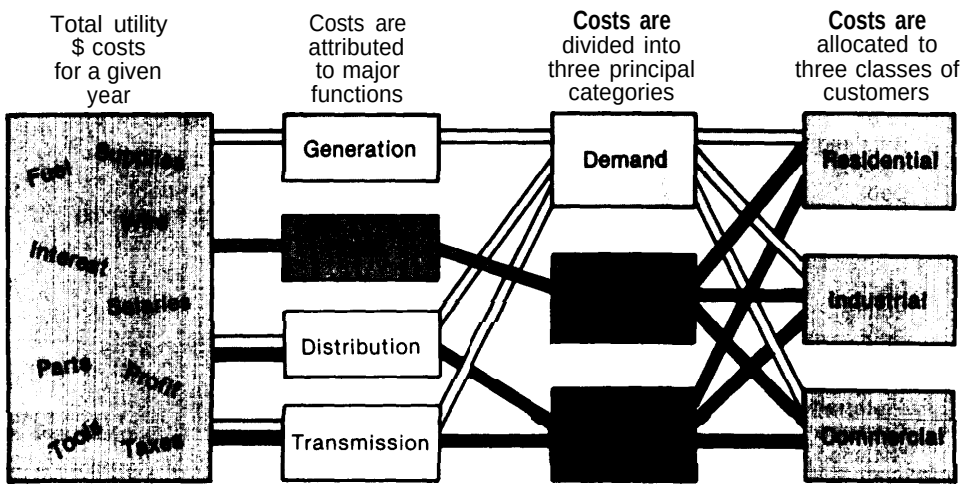

SOURCE: Office of Technology Assessment.

merce. The States retained exclusive jurisdiction over intrastate and retail electricity sales until passage of the Public Utility Regulatory Policies Act of 1978 (PURPA), which required the Federal Energy Regulatory Commission (FERC) to establish standards for PSCS to consider in setting retail and certain wholesale rates (56).

The Federal Power Act of 1935 requires that all rates and charges of any electric utility for the transmission or sale of power subject to FERC (formerly FPC) jurisdiction be just and reasonable as well as nondiscriminatory. Each utility must regularly file with FERC schedules that show such rates and charges, and the classifications, practices, and regulations that may affect them. FERC rate proceedings are similar to those of State commissions: FERC first determines the utility's revenue requirement and then approves a rate schedule designed to meet that requirement. In such proceedings, FERC traditionally has employed the same cost-based formulae used by PSCs (3).

Although only about 10 percent of the revenues realized by IOUS are from wholesale transactions subject to Federal jurisdiction, FERC still has a broad opportunity to influence State ratemaking. For example, States may be reluctant to introduce innovative rate structures for fear of placing utilities within their jurisdiction at a competitive disadvantage. Innovation at the Federal level can provide the experience necessary for State adoption of innovative rate designs. Moreover, FERC'S ability to examine cost trends and pricing practices on a regional or nationwide (as opposed to local) scale may reveal to States opportunities for ensuring greater economy in electric power supply.

FINANCING

The second major factor in utility economics is financing of new generating capacity. Utility financing options vary widely depending on the form of ownership, current economic conditions, the type of project being financed, and similar considerations. A summary of differences in financing by form of ownership is shown in table 12. The general considerations related to utility financing of capacity additions are reviewed here; financing considerations specific to cogeneration will be discussed in the following section.

Investor-Owned Utilities.– IOUS spend the largest proportion of funds in the electric power industry (see table 10) and, based on announced plans for capacity additions (table 13), their share of funds is likely to remain large. IOUS have four basic options for securing those funds: long-term debt, preferred stock, common stock, and retained earnings (see table 14).

The primary form of long-term debt financing for IOUS is the mortgage bond, which is secured by a conditional lien on part or all of the com-

Table 12.—Differences in Financing by Form of Ownership[a]

Ownership	Capitalization	Percent	Average return to financing sources	Tax treatment	Financiability
Federal	Debt	27.8	7.25% (1977)	Tax exempt	Federal
	Retained earnings	9.1		Taxed	revenues
	Federal	63.1			
Municipal	Debt	73	4.9	Interest on debt	Electric
	Retained earnings	25.5		exempt from taxes	revenues or
	Municipality	1.5			municipality
Cooperative:					
Distribution	Dept	66 (1977)	7.4 (1977)	Taxed	Federal loans
	Equity	34 (1977)	10.7 (1977)		or guarantees,
G&Ts[b]	Debt	96 (1977)	7.4 (1977)		or members'
	Equity	2 (1977)	10.7 (1977)		shares
Investor owned	Debt	50.3	11.85	Taxed	investors
	Preferred	12.5	9.76		
	Common	24.9	11.3		
	Retained earnings	12.3			

a1979 data unless Indicated otherwlse.
bGeneration and transmission.

SOURCE: Economlc Regulatory Adminlstration, The National Power Grid Study, Volume II(Washington, D.C.: U.S. Department of Energy, DOE/ERA-0056-2, September 1979.

Table 13.–New Capacity Additions (in megawatts, net operating capacity)

	Added 1979	Planned 1980	1981	1982	After 1983	Total planned
Private	9,167	22,373	13,139	17,582	137,832	190,930
Public	2,945	17,444	26,448	1,488	20,793	26,563
Cooperative	1,640	2,675	1,543	2,577	11,376	18,171
Federal	3,323	3,315	3,322	1,891	19,376	27,904
Total	17,075	30,107	20,652	23,522	187,377	263,658

SOURCE: Office of Technology Assessment from U.S. Department of Energy data.

Table 14.—Capital Structure for Private Utiiities (average percent of capitalization)

	1966	1970	1974	1977	1978	1979	1960
Long-term debt	52.3	54.8	53.0	51.0	50.5	50.4	50.4
Preferred stock	9.5	9.8	12.2	12.5	12.4	12.5	12.3
Common stock	26.1	23.2	23.5	24.2	24,8	25.0	25.4
Retained earnings	12.1	12.2	11.3	12.3	12.3	12.1	11.9

SOURCE: Edison Electric institute, *Statistical Yearbook of the Electric Utility Industry, 1980* (Washington, D. C.: Edison Eiectric Institute, November 1981).

pany's property. In 1980, approximately 50 percent of total average IOU capitalization was long term debt. In the same year, IOUS issued around $8.3 billion in long term debt (or 58 percent of their 1980 long term financing), $7.85 billion of which was new capital and the remainder refunding. For the last quarter of 1980, the average yield on all IOU bonds was 14.11 percent, with a range of 13.18 percent for Aaa bonds to 15.20 percent for Baa bonds. For newly issued bonds, the average yield in 1980 was 13.46 percent (20).

Common stock equity represented about 25 percent of electric utilities' total outstanding capitalization in 1980. iOUs issued approximately $4.1 billion of common stock in 1980, or around 28 percent of the long term financing obtained by IOUS during that year. The average yield on common stocks during 1980 was 12.01 percent. The actual return on average common equity was 11.4 percent, while the authorized rate of return averaged around 14.2 percent (20).

Preferred stock was about 12 percent of total outstanding electric utility capitalization in 1980. In the same year, approximately $2.0 billion of preferred stock was issued by IOUS (or about 14 percent of total 1980 long-term financing), with an average yield of 12.28 percent (20).

Finally, IOUS may use internally generated capital or retained earnings to finance capacity additions. The amount of retained earnings available for financing usually is reflected by the ratio of dividends to net income, or the payout ratio. IOUS have had to pay a major portion of their net profits in dividends in recent years (75.8 percent in 1980), reducing their ability to finance projects internally. In 1980, retained earnings were the smallest source of capital available to utilities (about 12 percent of total capitalization) (20).

Publicly Owned Utilities.–Publicly owned utilities' advantages over IOUS in financing new capacity include their smaller size and thus lower capital needs, their self-regulating (in most cases) and tax-exempt status, and their absence of concern about protecting shareholders' equity. Yet this does not mean that they are totally without financing problems.

As with IOUs, the predominant form of municipal utility financing is long-term debt (73 percent of total 1979 capitalization) —mostly electric revenue bonds or general obligation bonds. Municipal bonds are attractive to investors because of their tax-free interest, but their average yield is lower as a result (4.9 percent in 1979). Equity financing for municipal utilities is a combination of direct investment by the municipal government and the retained surplus from operating revenues. The retained surplus is extremely important for

municipal' ability to build a base for expansion; it averages about 10 times the amount of direct investment by the municipal government (18). In 1979, retained earnings represented an average of 25.5 percent of municipal' total capitalization (25).

The primary sources of long-term financing for cooperatives are insured loans and loan guarantees from the Rural Electrification Administration (REA). REA makes insured loans to the local distribution co-ops at interest rates of 2 to 5 percent, based on a revolving fund that has a borrowing "floor" and "ceiling" specified annually by Congress. Loans from the revolving fund are repaid from borrowers' operating revenues and from collections on outstanding REA loans (16). Since 1973, REA also has been authorized to make 100-percent loan guarantees to power supply borrowers–mostly G&Ts–for the construction and operation of powerplants and related transmission facilities. These guarantees are made almost entirely by the Federal Financing Bank, which borrows money from the U.S. Treasury. In fiscal year 1981, 34 REA loan guarantee commitments were made to power supply borrowers; they accounted for about 85 percent of REA's total fiscal year 1981 electric financing programs. Interest rates on REA loan guarantees averaged about 15 percent (45).

REA insured loans are supplemented by money raised by the National Rural Utilities Cooperative Finance Corp. (CFC) in the public bond market. Co-ops that receive REA insured loans are required to obtain from 10 to 30 percent supplemental financing from non-REA sources such as CFC (which is a giant nonprofit co-op owned by about 85 percent of the rural electric co-ops). CFC bonds accounted for approximately 4 percent of all rural electric co-op financing in fiscal year 1981 (see table 15).

Regulatory Considerations.–Almost all aspects of utility finance are regulated at either the State or Federal level or both. As in rate regulation, the States have primary jurisdiction over intrastate utility financial transactions while the Federal Government regulates interstate financing arrangements as well as those with antitrust implications.

In general, State regulation focuses on prior approval of IOU'S issuance of mortgage and debenture bonds and other long-term debts (e.g., notes over 1 year), and of common and preferred stock. Some PSCS also regulate declarations of dividends and budgets for capital expenditures. For public utilities, the authority to issue bonds derives from the State constitution or statutory authority. In many cases, a municipality must also obtain voter approval before issuing new bonds.

Table 15.—Sources of Long-Term Financing to REA Electric Borrowers (percent by fiscal year)

Year	REA 20/0	REA 5°A	REA guarantee commitments	CFC	Other financing	Total
1969	100.0%	—	—	—	—	100.0 '%0
1970	100.0	—	—		—	100.0
1971	96.6	—	—	3.4%	—	100.0
1972	72.2	—	—	15.3	12.5%	100.0
1973	32.4	52.80/o	—	13.6		100.0
1974	3.1	26.0	45.80/o	4.9	20.2%	100.0
1975	5.1	28.7	58.2	7.7	0.3	100.0
1976	10.3	24.5	57.6	5.1	2.5	100.0
TQ	7.6	22.5	64.8	3.3	1.8	100.0
1977	5.3	11.4	77.9	2.9	2.5	100,0
1978	5.1	20.8	66.2	6.0		100.0
1979	3.3	11.5	80.5	3.7	0.9	100.0
1980	2.0	11.3	81.4	4,3	0.9	100.0
1981	2.8	10.6	78.7	4.0	3.9	100.0

SOURCE: U.S. Congress, Senate hearfngs before the Commlttee on Appropiations, "Agriculture, Rural Development, and Related Agencies Appropriations," fiscal year 1980, 96th Cong., 1s1 sess., part 1—justifications; National Rural Electric Comparative Association, personal communication to the Offlce of Technology Assessment.

Federal jurisdiction over electric utility ownership and financial operations includes regulation of debt and equity financing of holding companies and their acquisition of other entities, sales and purchases of utility property, and the issuance of securities by both the Securities and Exchange Commission (SEC) and FERC. In general, SEC regulates holding companies* under the Public Utility Holding Company Act of 1935 (PUI-ICA) in order to simplify their structures and to prevent abuses similar to those that occurred during the 1920's. SEC also regulates IOUS under the Securities and Exchange Commission Act of 1935 to protect investors and the public by providing accurate information about a wide range of factors that may affect a utility's financial position, and thus the relative risks associated with investment in its securities. Finally, under the provisions of the Federal Power Act, no utility may issue securities, or assume any financial obligation or liability (e.g., as guarantor, endorser, surety, etc.) with respect to securities, without authorization from FERC. FERC also must approve any utility sale, lease, or other disposition of property worth more than $50,000, as well as mergers or consolidations of such property, if it finds they are reasonably necessary or appropriate for the utility's corporate purposes, are in the public interest, and will not impair the utility's ability to provide service. Utilities may file the same reports on securities with both FERC and SEC in order to eliminate unnecessary paperwork.

Taxation.–Like financing, utility tax liability depends to a large extent on ownership. IOUS are fully liable for all taxes—income, excise, property, and sales as imposed by various levels of government–whereas Federal and municipal utilities usually are exempt from all tax liability. However, Federal and municipal utilities often make payments to local governments in lieu of property taxes (about 25 to 50 percent of the otherwise exempted taxes). Cooperatives generally are exempt from income and excise taxes but liable for property and sales taxes. In addition, cooperatives that derive more than 15 percent of their total revenues from nonmember services are liable for income taxes. In 1980, tax payments by IOUS averaged 12.7 percent of electric department operating revenues (20). The tax breakdown for 1980 is shown in table 16.

Taxation is primarily an issue in electric utility finance and regulation to the extent it allows special treatment that will reduce the cost of capital investments. The primary forms of special tax treatment are the investment tax credit and accelerated cost recovery coupled with special federally mandated accounting rules.

The investment tax credit (ITC) encourages investment in new, used, or leased business property that is placed in service after 1980 and that has a useful life of at least 3 years. The property must be depreciable (i.e., either tangible personal property or an improvement to real property used in qualifying manufacturing or service businesses). Buildings and real property are specifically excluded from eligibility. Since 1975, treatment of utilities under ITC provisions has been roughly equal to that of other businesses.

The amount of ITC depends on the accelerated cost recovery (ACRS) for the property. Property in the 3-year ACRS class (cars, light trucks, and research and development equipment) is eligible for a 6-percent credit, and all other property receives a 10-percent credit. There is a $125,000 limit for qualifying investments in used property from 1981 through 1984, and a $150,000 limit after 1984. If the available investment tax credit

Table 16.—Taxes Paid by Investor-Owned Electric Utilities–Electric Department Only, 1980

	Amount (millions of dollars)	Percent of operating revenue
Federal taxes:		
Income	$1,242	1.5 "/0
Deferred taxes on Income	1,347	1.7
Other charges In lieu of taxes[a]	1,392	1.7
Miscellaneous	1,492	1.9
Total Federal taxes charged to income	5,473	6.8
State and looal taxes.	4,795	5.9
Total taxes charged to income	$10,268	12.7%

alncludes Investment tax cradlts reported as charges to income for the current year.

SOURCE: Edison Electric Inatltute, *Statistical Yearbook of the Electric Utility Industry, 1980,* (Washington, D. C.: Edison Electric Institute, November 19s1).

*Holding companies are defined in PUHCA as those that directly or indirectly control 10 percent or more of the outstanding voting securities of a utility (or other holding company) or that, in the judgment of SEC, could exercise a controlling interest over the management or policies of a utility or holding company sufficient to make regulation necessary in the public interest.

exceeds a taxpayer's liability in any year, the excess credit may be carried forward for 15 years or backward for 3 years.

In addition to the standard ITC, an extra 10-percent credit may be available for investments in certain qualifying energy property (see table 17) through December 1982. This energy tax credit is not available on that portion of an investment which is financed by tax-exempt or other subsidized financing (e.g., industrial development bonds). Moreover, public utility property (with the exception of hydroelectric equipment) does not qualify for the energy tax credit. Other than the exceptions outlined above, the rules pertaining to the energy credit generally parallel those for the ITC.

The ITC and energy credit represent a direct reduction in tax liability (for those businesses with sufficient tax liability to benefit from it) that, in effect, reduces the cost of equipment purchases. Thus, these credits decrease the amount of investment capital needed without reducing the basis for cost recovery purposes. At present, many electric utilities have accumulated large backlogs of excess credits due to the percentage offset limitations and the accompanying carryback and carryforward provisions (see table 16). If State regulators allow utilities to retain the benefits of the ITC, they usually are used to help defray the costs of construction of new generating capacity rather than passed on to customers immediately.

Table 17.—Energy Property Eligible for ITC Under the Energy Tax Act of 1978

1. Alternative energy property:
   - boilers and burners fueled by substances other than oil/gas;
   - synthetic fuel conversion equipment;
   - equipment for converting existing oil/gas using facilities to alternate fuels;
   - equipment that uses coal as a chemical feedstock;
   - pollution control equipment for any of the above;
   - equipment for handling, preparing, storing, etc., alternate fuels for any of the above; or
   - geothermal energy facilities.
2. Solar or wind energy property used to generate electricity, to heat or cool, or to provide hot water.
3. Specially defined energy property, including:
   - recuperators,
   - heat wheels,
   - heat exchangers,
   - waste heat boilers,
   - heat pipes,
   - automatic energy control systems,
   - turbulators,
   - preheater,
   - combustible gas recovery systems,
   - economizers, or
   - other similar property defined in regulations,

   the principal purpose of which is to reduce the amount of energy used in any existing industrial or commercial process and which is installed in an existing industrial or commercial facility.
4. Equipment used to sort and prepare for recycling or to recycle solid waste.
5. Equipment for extracting oil from shale.
6. Equipment for producing natural gas from geopressurized brine.

SOURCE: Office of Technology Assessment.

The second form of tax treatment that can reduce the cost of capital investments is accelerated cost recovery. The Internal Revenue Code allows a deduction for "the exhaustion, wear and tear (including a reasonable allowance for obsolescence)" of business or investment property. Accelerated cost recovery allows property to be written off before its useful life has ended, either by shortening the useful life or by concentrating larger deductions in the early years of the asset's useful life. Under the Economic Recovery Tax Act of 1981 (ERTA), cogenerators placed in service after December 31, 1980, would be in a 5-year cost recovery class, while public utility property would be in a 5-, 10- or 15-year class, depending on its depreciation class under the previous tax laws.

In a competitive industry, much of the reduced capital cost that results from accelerated cost recovery would be passed on to customers in the form of lower prices. With regulated utilities, however, the State commissions have had to decide whether the taxes incorporated into the revenue requirement should be only those actually paid (i.e., the benefits of accelerated cost recovery are "flowed through" to customers in years of tax savings) or whether the taxes should be "normalized" over the life of the investment (i.e., the taxes included in the revenue requirement will be higher than actual taxes in the early years and lower in later years and the benefits are retained by the utility). Under ERTA, a public utility that wants to take advantage of ACRS and ITC must use normalization accounting to compute the tax expense for ratemaking purposes. If the utility uses flow-through accounting it must

use the same cost recovery method for both tax and ratemaking purposes.

In 1976, accelerated cost recovery is estimated to have reduced customer rates by about $1.3 billion (2.2 percent) and utility tax payments by about $2 billion (51 percent). The ITC reduced rates to a much smaller extent (perhaps $200 million), but decreased utility taxes by $1.3 billion. The combined effect was a 2.6-percent reduction in customer billings, an 84-percent decrease in Federal tax payments by utilities, and a 20-percent ($2 billion) increase in the cash flows of normalizing utilities. In 1979, it is estimated that tax incentives provided IOUS with $3 billion per year additional construction funds (equivalent to 15 percent of annual construction expenditures). In some cases, these tax incentives may represent the only source of internal funds for utilities (1 *5).*

Other provisions of Federal tax law that provide investment incentives for utilities include a deduction for interest paid to bondholders that reduces the cost of debt financing; a deduction for IOUS of about 30 percent of the dividends paid on preferred stock; and, a deduction for the costs of repairs or improvements to depreciable property based on a specified annual percentage of the property's cost.

REGULATION OF SERVICE AND OPERATIONS

The third major area of electric utility regulation is State and Federal jurisdiction over utility service and operations. The primary concerns of such regulation are to ensure adequate service, to protect the public health and welfare, and to further national policy goals related to fuel use.

Service Regulation.– State PSCS have broad authority over utility services, including granting the right to serve, defining service territories, and approving major capacity additions. The primary mechanism by which a PSC exerts control over these activities is the certificate of public convenience and necessity, which essentially is a permit to operate a utility. In addition, many PSCS also have jurisdiction over the operating characteristics of private (and some public) utilities, including authorizing or requiring interconnections, requiring utilities to operate as common carriers, ordering the joint use of facilities among two or more utilities, and requiring line extensions within a utility's service territory (see table 18).

The Federal Government's primary role in regulating utility service is through its authority over interconnection and coordination among utilities. Under section 202(a) of the Federal Power Act of 1935, FERC (formerly FPC) was directed to

Table 18.—State Regulation of Utiiity Service and Operations

Authority	Number of PSCS according to type of utility regulated		
	Investor-owned	Public	Co-op
Certificate of convenience and necessity required for:			
Generating capacity additions	25	9	15
Transmission line additions	28	14	20
Distribution system additions	20	11	13
Other plant additions	16	8	11
Initiating service	31	13	20
Abandoning facilities or service	34	17	21
Regulate State exports	6	2	3
Allocate unincorporated territory among utilities	33	14	22
Establish standards for:			
Voltage levels	41	17	24
Safetv	44	21	26

[a]Includes 50 State commissions plus District of Columbia, Puerto Rico, and Virgin Islands.

SOURCE: Alan E. Finder, *The States and Electric Utility Regulation* (Lexington, Ky.: The Council of State Governments, 1977).

"divide the country into regional districts for the voluntary interconnection and coordination of facilities for the generation, transmission, and sale of electric energy" in order to ensure an abundant supply of electricity throughout the United States "with the greatest possible economy and with regard to the proper utilization and conservation of natural resources." Once these districts were established, the Federal Government's role was limited to promoting and encouraging voluntary interconnection and coordination of facilities within and among them.

PURPA expanded FERC'S authority in regard to interconnection and coordination in a number of ways. Section 205(a) of PURPA authorizes FERC (either on its own motion or upon receipt of an application) to exempt a utility from State laws, rules, or regulations that prohibit or prevent voluntary coordination, including agreements for central dispatch, if the coordination is designed to obtain the economic utilization of facilities and resources in any area. Section 205(b) directs FERC to study the opportunities for energy conservation, increased reliability, and greater efficiency in the use of facilities and resources through pooling arrangements. Where such opportunities exist, FERC may recommend to utilities that they voluntarily enter into negotiations for pooling. Finally, PURPA expanded FERC'S authority to order interconnections to include those with qualifying cogeneration and small power production facilities, and to include wheeling orders. These provisions are discussed in detail in the next section.

Public Health and Welfare.–Regulation of utility operations in the interests of protecting the public health and welfare focuses on safety standards and on environmental protection. At the State level, the primary responsibilities include the implementation of federally mandated programs as well as the establishment and enforcement of minimum standards for voltage, metering accuracy, customer and employee safety, and emergency situations and curtailments.

Such Federal legislation affects powerplant siting and operation substantially through requirements for environmental impact assessments and pollution monitoring and control, as well as through provisions that limit the available sites for large generating facilities. The most important Federal programs in this area include:

- *The National Environmental Policy Act of 7969* (NEPA), which requires all Federal agencies to include a detailed environmental impact statement on every major Federal action significantly affecting the quality of the human environment.
- *The C/can Air Act* sets National Ambient Air Quality Standards that are implemented through standards of performance for new stationary sources and guidelines for State control strategies for existing sources, and through guidelines for regulatory programs designed to improve air quality in non-attainment areas and to prevent degradation of air quality in clean air areas.
- *The Clean Water Act* imposes effluent limitations on quantities, rates, and concentrations of chemical, physical, biological, and other constituents discharged into navigable waters, and are implemented through ambient water quality standards, effluent standards for new and existing sources, standards for thermal discharges, and permit programs.
- *The Resource Conservation and Recovery Act of 1976* seeks to control the land disposal of solid wastes (e.g., fly and bottom ash, scrubber sludge) through a system of State plans and permits for solid waste disposal.
- *The Atomic Energy Act,* which includes comprehensive licensing and permitting procedures for both the construction and operation of nuclear powerplants.
- *The Occupational Safety and Health Act (OSHAJ* which establishes standards for the protection of workers, requires recordkeeping, and sets up a process for periodic inspections and the filing of complaints.
- *The Endangered Species Act of 1973,* which requires that all Federal departments and agencies consult with the Secretary of the interior to ensure that actions authorized, funded, or carried out by them do not jeopardize the continued existence of these species or result in the destruction or adverse modification of their habitat.
- *The National Historic Preservation Act of 1970* which requires all Federal agencies to

determine whether a proposed action will affect a site or structure listed or eligible for listing in the National Register and, if so, to obtain comments from the Advisory Council on Historic Preservation.

- *The Fish and Wildlife Coordination Act of 1970,* under which Federal agencies must consult with the Department of the Interior's Fish and Wildlife Service and with the State agency having jurisdiction over fish and wildlife prior to taking any action potentially affecting surface waters.
- *Army Corps of Engineers requirements* that all projects affecting navigable waters obtain a permit from the Corps.
- *The Coastal Zone Management Act,* which requires Federal agencies to obtain certification that proposed actions are consistent with approved State programs.

Although this list of Federal programs is not all-inclusive, it offers a general idea of the scope of laws and regulations that affect the siting, construction, and operation of central station generating plants. These regulations can lengthen the leadtime for siting and building a powerplant, require technological and other environmental controls in plant design and operation, and impose significant monitoring and recordkeeping requirements during plant construction and operation, all of which increase the direct costs of electricity generation.

Regulation of Fuel Use.–Prior to 1973, the choice of fuel for utility and industrial plants was primarily a matter of resource availability, economics, and convenience, as influenced by indirect regulation through tax and environmental laws, and price controls. Then, natural gas shortages and the 1973 oil embargo drastically changed the economic and supply considerations of fuel use and introduced direct Federal regulation. The primary Federal regulations on fuel use that affect utilities derive from the Fuel Use Act (FUA) and the Natural Gas Policy Act (NGPA), both part of the National Energy Act of 1978.

The primary purpose of FUA is to encourage greater use of coal and other alternate fuels as the primary energy source in utility, industrial, and commercial generation of electricity or thermal energy, and thus to conserve oil and gas for other uses. To achieve these purposes, FUA prohibits the use of natural gas or petroleum as a primary energy source in new electric powerplants and new major fuel-burning installations* and provides that no new electric powerplants may be constructed without the capability to use coal or any other alternate fuel as a primary energy source. FUA also prohibits existing powerplants from using natural gas as their primary energy source after 1990 and, in the meantime, from switching from any other fuel to natural gas or from increasing the proportion of natural gas used as the primary energy source. Moreover, the Secretary of Energy can issue prohibition orders for the involuntary conversion of existing powerplants to coal or another alternate fuel if the owner or operator of the powerplant commences the proceeding by filing an affirmative certification that the plant has the technical capability to use coal or another alternate fuel, or could have that capability without substantial physical modification or reduction in rated capacity, and it is financially feasible for the facility to use coal or other non-premium fuels.

Through December 1980, FUA prohibition orders had been issued for 53 oil burning units–mostly powerplants—and another 13 units were undergoing voluntary conversion to coal. In addition, 33 powerplants and 15 major fuel-burning installations (MFBIs) are subject to outstanding conversion orders under an earlier law (the Energy Supply and Environmental Coordination Act of 1974). Together, these 114 units have the potential to displace around 400,000 barrels (bbl) of oil per day (19).

FUA prohibitions are subject to a wide range of temporary and permanent exemptions. The temporary exemptions are granted for a period of 5 years; some of these can be extended to a total of 10 years but in no case beyond December 31, 1994. The most widely used of these exemptions is a special public interest exemption for the temporary use of natural gas in existing power-

*The provisions of FUA apply to powerplants and other stationary units that have the design capability to consume any fuel at a heat input rate of at least 100 MMBtu/hr or to a unit at a site that has an aggregate heat input rate of at least 250 MMBtu/hr.

plants that would otherwise burn middle distillates or residual fuel oils. The 1,058 petitions for this exemption that have been granted or are in process have the potential to displace 83,523 bbl/day middle distillate, 323,825 bbl/day residual fuel oil with a sulfur content of 0.5 percent or less, and 236,950 bbl/day residual with greater than 0.5 percent sulfur (or a total of 644,298 bbl/day) (19).

The actual effect of FUA on fuel use in existing and new powerplants and MFBIs is difficult to determine without a case-by-case analysis. The considerations imposed by the act must be viewed in the context of economic, technical, and managerial concerns. Absent a FUA prohibition order or exemption request, it is not always possible to identify the determining factor in electric utilities' fuel choice. Many energy analysts argue that it became cheaper to convert existing oil-fired plants to coal or to replace them with new coal or nuclear plants when the price of residual fuel oil reached $30 to $40/bbl (2,46). However, the economics of displacing existing oil-fired capacity may be outweighed by utilities' financial problems and the costs of using alternate fuels. Thus, fully two-thirds of the capacity that is economically feasible to convert has yet to be converted. Moreover, of the 66 units being converted under FUA, only 13 are doing so voluntarily (i.e., without a prohibition order), and those 13 represent only about 4 percent of the total potential oil displacement in the 66 units (19).

NGPA was designed to increase energy supplies while reducing domestic consumption. In general, the act distinguishes among a number of different classes and categories of natural gas according to the date the gas is committed to interstate commerce, whether the well is onshore or offshore, and the depth and location of the reservoir. Varying price schedules that would eventually lead to decontrol are established for the different classes and categories. These schedules are supplemented with rules for allocation and pricing of gas to final consumers. Residential customers generally have first priority for supplies under contract to interstate pipelines, with any remaining supplies spread through various lower priority commercial and industrial customers. There are complicated resale price schedules for all customer classes, with the highest priority generally being given the lowest of all outstanding prices.

NGPA assigns the lowest priority industrial gas users an incremental price equal to the new gas wellhead price plus regulated pipeline transportation margins. This higher incremental price is mitigated through a ceiling determined by the alternative fuel oil price. In some areas, the ceiling is based on number two distillate fuel and in others on residual fuel. Several users that otherwise would be subject to the higher incremental prices are specifically exempted, including small industrial boilers (using less than an average of 300 MCF/day); agricultural uses for which alternative fuels are not economic or available; schools, hospitals, and other institutions; electric utilities; and qualifying cogeneration facilities under section 201 of PURPA.

Current Status of Electric Utilities

Economic, energy, and utility analysts agree unanimously that the electric power industry—particularly the investor-owned portion-is in trouble due to its deteriorating financial condition (34,64). The symptoms are abundant, including declining real returns on equity and interest coverage, increased capital spending and debt/equity financing combined with high dividends per share, high payout ratios, and low market-to-book values. This situation represents a somewhat abrupt turnaround in the industry's financial health. During the two decades from 1945 to 1965, utilities accommodated rapid demand growth while continually lowering prices by taking advantage of economies of scale in generation as well as greater efficiency in transmission and distribution. Capital expenditures remained relatively constant on a per-customer basis and utility costs actually declined in some years although prices within the economy in general were rising. Return on equity rose steadily, most utilities had high bond ratings, and the market-to-book ratio more than doubled. Moreover, during those two decades energy consumption in general moved in line with other economic activity as electricity demand grew at

roughly twice the rate of the economy and far faster than energy usage as a whole. The price of electricity declined on an absolute basis as well as relative to prices as a whole and to the price of competing fuels (34).

However, 1965 is considered the watershed year for the electric utility industry. In that year, stock prices, rate reductions, and interest coverage ratios peaked, while a number of events reshaped utility capital investment such that money spent would not necessarily lead to reduced costs. For example, the Northeast blackout required expenditures to improve reliability of service, but those expenditures would neither reduce costs nor automatically be associated with increased revenues. Similarly, the environmental movement required capital expenditures that did not make plants more efficient or increase capacity. The military buildup in Vietnam signaled the onset of high inflation rates and brought construction delays and labor productivity problems. Emerging natural gas shortages caused utilities to shift to more capital-intensive types of powerplants, including coal and nuclear fueled plants, that took longer to build, cost more, and operated less efficiently (34).

As a result, capital spending accelerated, rate base increased more rapidly than sales, and a larger percentage of financing requirements had to be met through new capital (i.e., sales of securities). The combination of rising interest rates, an increasing amount of debt, and relatively slow growth in income resulted in decreasing interest coverage ratios and a decline in the quality of utility debt, and thus even higher interest rates. The combination of higher interest rates and lower return on equity pushed stock prices down until they fell well below book values. The average market-to-book ratio went from an all-time high of 2.35 in 1965 to a low of 0.67 in 1974, and back up to 0.80 in 1978. Thus, during a period when securities were claiming an ever larger share of total capitalization, each new issue further diluted the interests of shareholders. At the same time, utilities began to capitalize an allowance for funds used during construction (AFUDC) in their income statements, which increased the non-cash portion of their reported earnings. Therefore the overall decline in return on equity was greater than was apparent from the reported figures. The only available solution to the problem was to increase rates (34).

in 1970, the average price of residential electricity increased for the first time in 25 years, and has continued to rise ever since from its low of $.0209/kWh in 1969 to its high in 1980 of $.0493 /kWh ($.0536/kWh for IOUS). * The average price of all electricity also has risen–from a low of $.0154/kWh in 1969 to a high of $.0437/kWh in 1980 (4.72 WkWh for IOUS) (20). However, the rate relief obtained in the last 10 years has been inadequate to raise interest coverage and return on equity to their previous levels and bond ratings have fallen, increasing interest charges still further. Moreover, although the price of electricity did not increase as rapidly as those of competing fuels, it did go up more than prices as a whole throughout the economy.

The electric power industry's problems up until the early 1970's were compounded by other factors during the last decade. First, the 1973-74 oil embargo drastically changed both fuel supplies and prices, and utility customers cut back on electricity consumption. In 1974, electric usage per customer decreased for the first time since 1946, and the previously steady pattern of rapid growth (about 8 percent per year from 1947 to 1972) changed dramatically.** But the industry had geared its capital spending and its expense budget to the previous sales gains. Capacity additions begun before 1974 became excess capacity as these gains failed to materialize. Moreover, much of the new capacity installed or announced in the years immediately preceding the embargo was oil-fired in response to environmental objections to coal and to uncertainties in natural gas supplies. This decline in demand growth caught utilities in a squeeze between high fixed costs and declining base rate revenue due to falling sales (34).

A second factor that dramatically affected utility fortunes during the 1970's was one utility's omission of a common stock dividend—a first for the utility industry-in April 1974. In that month, the

*Prices expressed in current dollars.
**While electricity demand growth has slowed noticeably, since 1973 it still has been about twice that of energy as a whole.

98-946 O - 83 - 6 : QL 3

utility stock average fell 18 percent, and by September had fallen 36 percent, the largest drop in any calendar year since 1937. Also, 1974 was the year that market-to-book ratios hit their low of 0.67. The increased risk in utility stocks carried over to the market in lower quality bonds, and for the first time, investors had to consider the possibility of a financial risk in utility securities, and utilities had to face the prospects of even higher costs for new capital (34).

A third major event affecting the electric power industry during the 1970's was the accident at the Three Mile Island (TMI) nuclear powerplant in 1979. Even before TMI, some investors had been leery of nuclear-oriented utilities because of the huge sums involved in one project that could be delayed or halted by a determined opposition. The TMI accident added another risk–if an operating nuclear plant went out of service, the power company might have to purchase far more expensive electricity from other utilities. If the regulators did not allow the purchased power costs to be passed on to consumers, the utility could suffer serious financial losses. General Public Utilities, whose subsidiaries owned TMI, was forced to omit its dividend and was unable to place securities in the public market after the accident. In conjunction with a weakened financial state and excess generating capacity in many areas, the accident accelerated the cancellation or deferral of nuclear projects by many electric utilities (34).

Based on some indicators, the general economic and financial deterioration of the electric power industry that began in the late 1960's and continued through the 197o's seems to have begun to turn around. Electric utility earnings began to rise sharply in late 1980 and continued to increase through 1981. The gain in earnings lifted the average return on equity (for a sample of 85 electric utilities representing 95 percent of IOU revenue) to 12.3 percent by September 1981 —the highest return earned since the late 1960's. The proportion of capital spending financed with internally generated funds (including common equity) rose with the return on equity, reaching 43 percent late in 1981, entirely offsetting the decline that occurred during 1979 and early 1980 (63).

However, other indicators are not so favorable. Even though the earned rate of return has increased steadily in the last 2 years, it still lags behind the authorized return–estimated to be about 14.2 percent in 1980. In addition, although operating revenues have risen (by 18.3 percent in 1980) due to a combination of increases in rates, fuel adjustment clauses, and sales to ultimate customers, the gains in revenues were more than offset by increased operating expenses (up 19 percent in 1980), primarily due to higher fuel costs (20). Similarly, the increased percentage of equity financing has not been sufficient to offset the record high interest rates. Utility interest expenses have continued to rise at more than 20 percent annually while interest coverage ratios (the ratio of net income and income taxes to interest expense) have remained relatively static for the last 2 years. In late 1981, the average interest coverage ratio was 2.47 with AFUDC, and 2.01 without AFUDC. Common stock dividend payout ratios have risen steadily, to a record 75.8 percent in 1980 (compared to a traditional IOU payout ratio of 65 to 68 percent). Finally, sales of stock have continued to dilute the book value at a rate that more than offsets the contribution of retained earnings (63).

As long as interest rates remain high and earned returns on equity remain lower than authorized, utilities will continue to have trouble regaining their financial health. Without additional aggressive rate relief, growth in earnings is likely to continue to lag behind that of revenues. The high interest rates would continue to favor equity financing over long-term debt, and thus continue to erode book value and increase payout ratios to the detriment of stockholders' interests. As a result, IOUS are likely to continue having trouble financing their construction budget.

Possibie Future Paths for the Electric Power industry

A wide range of options are available to utility planners today, perhaps wider than at any time in the past. The menu of generating and other technologies from which to choose, the array of institutional arrangements for financing and management, the possibilities for investment on

the customer's side of the meter—all have expanded greatly in recent years. All of these options must be considered in the context of their potential to reduce utility dependence on oil and reduce capital expenditures and operating costs, while enabling utilities to continue to provide reliable service and protect investors.

Given the numerous unpredictable events that have plagued the electric power industry over the last 15 years, utilities will have to develop plans with sufficient flexibility to handle a wide array of contingencies in demand growth, technology availability, and economic conditions. In many cases, these plans will be substantially different in character from traditional planning, either due to their approach to the size and mix of generating technologies, or through planned controls on the rate or type of demand growth.

One possible way to achieve such flexibility is for a utility to diversify its energy mix. Thus, rather than being heavily dependent on any one fuel (e.g., coal, nuclear), the utility's capacity would be spread among the available options, reducing the risk of a capacity shortfall in the event of unexpected fuel shortages (e.g., a coal strike, a nuclear accident). Second, utilities will have to plan for financing flexibility. Conventional large baseload plants are extremely capital intensive. Because of their size, they often lead to short-term excess capacity until sales have a chance to grow sufficiently to match the increased capacity. In addition, their long construction lead-times often mean high interest charges. As was seen in the previous section, unless these large baseload plants substantially increase system efficiency and reduce utility costs, they can contribute significantly to financial deterioration. Smaller capacity increments, on the other hand, are easier to phase in as demand develops, and allow greater short-term financing flexibility. In this sense, the smaller additions substitute financial optimization in planning for the engineering optimization achieved in large conventional plants.

A third option for utility planners is to invest in energy and fuel efficiency at the point of use. As was seen in the discussion of the current status of electric utilities above, one of the factors that contributed to current utility financial problems was utilities' need to make capital investments (e.g., for environmental protection, increased system reliability) that neither reduced costs nor served new customers. Thus, overall system productivity declined as costs increased. In order to reverse this trend, some utilities are planning to invest heavily in technologies that contribute to system efficiency (e.g., conservation, load management) in lieu of new capacity.

Beyond these three major options, there are several other steps a utility can take to improve its financial position with regard to meeting future service needs. For example, joint action agencies (see discussion of utility organizations, above) allow a utility to benefit from economies of scale while also receiving the advantages of investment in small capacity increments, including financial and planning flexibility. In some areas, conversion to public ownership may be an option for improving utilities' financial status, since publicly owned utilities have access to lower cost capital and do not need to be concerned with protecting stockholders' interests.

However, utilities' system and financial planning is only one aspect of the future of the electric power industry. Without appropriate regulation, many of the options discussed above will not be feasible and even well-managed utilities could face financial and service dilemmas.

Utility regulators at all levels of government also have a wider range of options than has existed in the past. The problems faced by electric utilities have led to a better understanding of utility economics and its regulatory implications. The result has been a wide range of regulatory innovations that could complement utility planning for flexibility. But if regulators fail to take advantage of such options, or to ensure that utilities are compensated adequately for the increased risks they will be facing, even the most innovative utility planning will be to no avail.

REGULATION AND FINANCING OF COGENERATION

Historically, cogenerators faced three major institutional obstacles when seeking interconnected operation with an electric utility. First, utilities often were reluctant to purchase cogenerated electricity at a rate that made interconnected cogeneration economically feasible. Second, some utilities charged very high rates for providing backup service to cogenerators. Third, a cogenerator that sold electricity risked being classified as—and therefore being regulated under State and Federal law as–an electric utility. As a result of these and other disincentives, cogeneration was not able to compete, except in large stand-alone industrial applications, with electricity generated in central station powerplants plus thermal energy from conventional combustion systems.

In recent years, however, cogeneration has attracted a lot of attention as a means of increasing energy efficiency, easing utilities' financial stress, and reducing the amount of oil needed to supply electric and thermal power to buildings and industries. Where these benefits are available (see chs. 5 and 6), recent changes in Federal and State regulation and in financing practices may improve cogeneration's ability to compete with conventional energy conversion systems. This section describes the regulatory and financing considerations that may affect utility, industrial, or commercial firms' decisions to install cogeneration capacity.

Federal and State Regulation

A number of recent legislative initiatives are intended to clarify the role of cogeneration within national energy and environmental policy, and to encourage its use under those circumstances where it would save fuel or allow increased efficiency in electric utilities' use of facilities and resources. The most significant of these initiatives include PURPA which provides guidelines for relations among cogenerators, utilities, and regulators; other parts of the National Energy Act that address the use and cost of premium fuels; and provisions of various environmental regulations that have been adapted to cogeneration's special problems and opportunities.

The Public Utility Regulatory Policies Act

Title Ii of PURPA was designed to remove the three obstacles to interconnected cogeneration listed above. Under section 210 of PURPA, utilities are required to purchase electricity from, and provide backup service to, cogenerators (and small power producers) at rates that are just and reasonable, that are in the public interest, and that do not discriminate against cogenerators. Section 210 also allows FERC to exempt cogenerators from state regulation of utility rates and financial organization, and from Federal regulation under the Federal Power Act and PUHCA. Electric utilities also are required to interconnect with qualifying facilities and must offer to operate in parallel with them. In order to qualify for these and other benefits available under PURPA, cogenerators must meet the requirements of section 201 for operating characteristics, fuel use, and ownership.

At this time, the fate of the PURPA provisions is unclear. In January 1982, the U.S. Court of Appeals for the District of Columbia Circuit ruled that portions of the FERC regulations implementing PURPA were invalid. Specifically, the appeals court vacated the FERC rules on rates for utility purchases of cogenerated power, and on interconnections between utilities and cogenerators, but upheld the FERC regulations on fuel use and on simultaneous purchase and sale (1). The Supreme Court has agreed to review the appeals court decision.

As a result of this pending case, it is not possible to say definitively what is the Federal policy on cogeneration. Therefore this section will outline the statutory provisions of PURPA and the FERC rules implementing those provisions, and will review the relevant court rulings and their effect on PURPA'S implementation.

REQUIREMENTS FOR QUALIFICATION

The benefits of PURPA are afforded only to "qualifying facilities." Section 201 defines a qualifying cogeneration facility as one that produces electricity and steam or other forms of useful thermal energy for industrial, commercial, heating,

or cooling purposes; that meets the operating requirements prescribed by FERC (such as requirements respecting minimum size, fuel use, and fuel efficiency); and that is owned by a person not primarily engaged in the generation or sale of electric power (other than cogenerated power).

Ownership Criteria.–The conference report on PURPA makes it clear that Congress did not intend to preclude electric utilities altogether from participation in qualifying facilities (14). Thus, either directly or through a subsidiary company, an electric utility can participate in the ownership of a qualifying cogenerator. Rather, the thrust of the ownership requirement is to limit the advantages of qualifying status to cogenerators that are not owned primarily by electric utilities or their subsidiaries. Under the FERC rules implementing section 201, the legal test is whether more than 50 percent of the entity that owns the facility is comprised of electric utilities or public utility holding companies (70). This ownership limitation does not apply to gas or other utilities.

Efficiency and Operating Standards.–The FERC regulations require topping cycle cogeneration facilities to meet both operating and efficiency standards. Because "token" topping cycle facilities could produce "trivial amounts of either useful heat or power," an operating standard was established to distinguish bona fide cogenerators from essentially single purpose facilities. This standard specifies that at least 5 percent of a topping cycle cogenerator's total energy output (on an annual basis) must be useful thermal energy (69). There is no operating standard for bottoming cycle plants because they produce electricity from otherwise wasted heat, and thus do not have the same potential for "token" production.

The topping cycle efficiency standard is designed to ensure that an oil- or natural gas-fired cogenerator will use these fuels more efficiently than any combination of separately generated electric and thermal energy using efficient state-of-the-art technology (e.g., a 8,500-Btu/kWh combined-cycle generating station and a 90-percent efficient process steam boiler). The efficiency standard established by FERC specifies that, for topping cycle cogenerators: 1) for which any of the energy input is oil or natural gas; and 2) for which installation began on or after March 13, 1980, the useful electric power output plus one-half the useful thermal energy produced must be, during any calendar year, no less than 42.5 percent of the energy input of oil and natural gas. However, if the useful thermal energy output is less than 15 percent of the total energy production, the useful electricity output plus one-half the useful thermal energy production must be no less than 45 percent of the total oil or gas input. Topping cycle cogenerators that were installed prior to March 13, 1980, and those that use fuels other than oil and gas do not have to meet any efficiency standards in order to qualify under PURPA (69).

The 2-to-1 weighting in favor of electricity production in these topping cycle efficiency standards reflects FERC'S view that "systems with high electricity to heat ratios have the highest second-law' energy efficiencies," and their development and use should be encouraged (see discussion of the thermodynamic efficiency of cogenerators in ch. 4) (76). This weighting will be more equitable to the various cogeneration technologies than a standard that simply summed electric and thermal output on an equal basis, because the latter would have made it relatively easy for steam turbines that produce little electricity to qualify, but would have penalized higher E/S ratio systems through difficult heat recovery requirements.

Because bottoming cycle facilities produce electricity from normally wasted heat, the efficiency standard only applies to those with supplementary firing heat inputs from oil and natural gas. In such facilities, the useful output of the bottoming cycle must, during any calendar year, be no less than 45 percent of the energy input of natural gas or oil for supplementary firing (i.e., the fuels used in the thermal process "upstream" from the facility's power production system are not considered in the efficiency test) (69).

Environmental Criteria.– FERC'S original requirements for qualification under PURPA denied qualifying status to diesel and dual fuel cogenerators built after March 13, 1980, pending environmental review. FERC'S final environmen-

tal impact statement (FEIS), released in April 1981, acknowledged that "an increase in the number of diesel and dual-fuel cogeneration facilities in an air regime may cause significant environmental effects in the near term." But the FEIS concluded that existing State and local air quality monitoring and permit programs would be adequate to prevent such effects, and "unregulated proliferation of diesel and dual-fuel cogenerators is not a realistic scenario." Based on these conclusions, FERC has declared diesel and dual-fuel cogenerators eligible for PURPA benefits (28).

Fuel Use Limitations.—Section 201 of PURPA specifies that a qualifying cogeneration facility must meet "such requirements (including requirements respecting minimum size, fuel use, and fuel efficiency) as the Commission may, by rule, prescribe." In implementing this section, FERC interpreted the statutory language as discretionary and chose not to impose fuel use limitations on qualifying cogenerators. FERC offered four arguments to support their position that this decision was consistent with congressional intent and national energy policy. First, FERC reasoned that if Congress had intended to deny qualifying status to oil- and gas-fueled cogenerators, PURPA would have contained explicit restrictions on fuel use similar to those that apply to small power producers. Second, Congress did include fuel use restrictions on oil- and gas-fired cogenerators in FUA, which was enacted at the same time as PURPA. Therefore, FERC determined it would be both unnecessary and inappropriate to impose an additional set of fuel use regulations under PURPA. Third, FERC argued that Congress recognized that qualifying cogenerators would burn natural gas by expressly exempting such facilities from the incremental pricing program under NGPA (enacted at the same time as PURPA). Fourth, FERC noted that the findings in section 2 of PURPA require "a program providing for . . . increased efficiency in the use of facilities and resources." Thus, the commission argued that oil and gas burning cogenerators should be granted qualifying status to the extent that they provide for more efficient use of these resources, and the efficiency standards discussed above would be sufficient to ensure such use (76).

FERC'S decision was upheld by the U.S. Court of Appeals, which agreed with these four arguments and held that the statutory language is discretionary and that the regulations promulgated by FERC were a reasoned and adequate response to the congressional mandate.

UTILITY OBLIGATIONS TO QUALIFYING FACILITIES

Under section 210 of PURPA and the FERC regulations implementing that section, electric utilities have a number of obligations to qualifying cogenerators. These include the requirement that utilities offer to purchase power from and sell power to cogenerators at equitable rates (including simultaneous purchase and sale), that they offer to operate in parallel with cogenerators, and that they interconnect with cogenerators.

Obligation to Purchase.–Section 210 of PURPA requires FERC to establish "such rules as it determines necessary to encourage cogeneration," including rules that require electric utilities to offer to purchase electric power from cogenerators. FERC interprets this provision as imposing on electric utilities an obligation to purchase all electric energy and capacity made available from qualifying facilities (QFs) with which the electric utility is directly or indirectly interconnected, except during system emergencies or during "light loading periods" (see below) (75).

PURPA specifies that purchase power rates must be just and reasonable to the electric utilities' consumers and in the public interest, and must not exceed the incremental cost to the utility of alternative electric energy. The FERC regulations use the term "avoided costs" to represent these incremental costs, and define them as:

> The incremental costs to an electric utility of electric energy or capacity or both which, but for the purchase from the qualifying facility, such utility would generate itself or purchase from another source *(68).*

The energy costs referred to in this definition are the variable costs associated with the production of electricity, and include the cost of fuel and some operating and maintenance expenses (see

discussion of rate structures in the previous section). Capacity costs are the costs associated with providing the capability to deliver energy; they consist primarily of the capital costs of generating and other facilities (75). Thus, if by purchasing electricity from a qualifying facility, a utility can reduce its energy costs or can avoid purchasing energy from another utility, the rate for the purchase from the QF must be based on those energy costs that the utility can thereby avoid. Similarly, if a QF offers energy of sufficient reliability and with sufficient legally enforceable guarantees of deliverability to permit the purchasing utility to build a smaller less expensive plant, avoid the need to construct a generating unit, or reduce firm power purchases from the grid, then the purchase rates must be based on both the avoided capacity and energy costs (75). In each case, it is the incremental costs, and not the average or embedded system costs, that are used to determine avoided costs.

One way of figuring the avoided cost is to calculate the difference between: 1) the total capacity and energy costs that would be incurred by a utility to meet a specified demand, and 2) the cost the utility would incur if it purchased energy or capacity or both from a QF to meet part of its demand and supplied its remaining needs from its own facilities. In this case, the avoided costs are the excess of the total capacity and energy cost of the system developed in accordance with the utility's optimal capacity expansion plan excluding the QF, over the same total capacity and energy cost of the system including the QF (75). The FERC rules require utilities to furnish data concerning present and anticipated future system costs of energy and capacity to enable potential cogenerators to estimate avoided costs.

The FERC rules outlined three primary considerations in determining avoided costs. The first is the availability of capacity or energy from a QF during system daily and seasonal peakloads. If a QF can provide electricity during peak periods when the utility is running its most expensive generating units, the electricity from the QF will have a higher value to the utility than power supplied during off-peak periods when only lower cost units are running. The relevant factors in determining the QF's availability include:

- *The utility's ability to dispatch the cogenerator* will enhance its ability to respond to changes in demand and thereby enhance the value of the cogenerated power (see discussion of interconnection in ch. 4).
- *The expected or demonstrated reliability of the cogenerator* (i.e., whether it may go out of service during the period when the utility needs its power to meet system demand) will determine whether the utility can avoid the construction or purchase of alternative capacity.
- *The terms of any contractor* other legally enforceable obligation (including its duration, termination notice requirements, and sanctions for noncompliance) also will provide a measure of the QF's reliability.
- *If maintenance of the QF can be scheduled* during the periods of low demand on the utility system or during periods when the utility's own capacity will be adequate to handle existing demand, it will enable the utility to avoid the expenses associated with providing an equivalent amount of capacity on peak.
- *If the QF can provide capacity and energy during system emergencies,* and can separate its load from its generation during such an emergency, it may increase overall system reliability and thereby enhance the value of the cogenerated power.
- *The aggregate or collective value of capacity* from a number of small QFs may be sufficient to enable a purchasing utility to defer or avoid scheduled capacity additions when none of the QFs alone would provide the equivalent of firm power to the utility.
- *The leadtimes associated with capacity additions from QFs* maybe less than the leadtime required for a utility powerplant, and thus the QF might provide savings in the utility's total power production costs by permitting utilities to avoid the excess capacity associated with adding large generating units or by providing greater flexibility in accommodating changes in demand (see ch. 6) *(72).*

The second consideration in a State regulatory commission's determination of avoided costs under the FERC rules is the relationship of energy

or capacity from a QF to the purchasing utility's need for such energy or capacity. If an electric utility has sufficient capacity to meet its demand, and is not planning to add new capacity, then the availability of capacity from a cogenerator will not immediately enable the utility to avoid any capacity costs. However, a utility with excess capacity may plan to build new plants in order to increase system efficiency or reduce oil and gas use. If purchases from a QF allow the utility to defer or avoid these capacity additions, the rate for such purchases should reflect these avoided capacity costs as adjusted for the lower energy costs the utility would have incurred if it had added the new capacity (75), That is, if deferring new construction may actually increase power costs, the qualifying facility may be credited only with the net of the deferred and increased costs.

Third, the utilities and State commissions must take into account any costs or savings from transmission line losses. Power produced by a QF maybe nearer to or farther from the service area than the utility-generated power it supplants. Because all power is subject to transmission losses as a function of distance, the rate for energy provided by the QF is to be net of line losses or gains.

In general, avoided costs are determined on a case-by-case basis. However, for small QFs, individualized rates may have very high transaction costs. Therefore, the FERC rules require utilities to implement standardized tariffs for facilities of 100-kW electrical capacity or less, and permit the use of such tariffs for larger units. These tariffs must be based on the purchasing utility's avoided cost, as described above, but may differentiate among QFs on the basis of the supply characteristics of the particular technology (72).

The net avoided cost concept leads to the possibility that, despite their inherent efficiencies, QFs may at times produce power that is more expensive than power produced by the utility (e.g., when the utility is under a low load situation and operating only baseload plants). Thus, if the utility has to reduce its baseload plant output in order to accommodate power purchases from a QF, it may also have to utilize higher cost peaking units when load increases or supplies from qualifying facilities drop, due to the longer startup times of baseload plants. A strict application of the avoided cost rules under such circumstances would mean a negative avoided cost that would have to be reimbursed by the QF. To avoid the anomalous result of forcing a cogenerator to pay a utility for purchasing cogenerated power, the FERC rules provide that an electric utility is not required to purchase power from a QF when such a purchase would result in net increased operating costs to the utility. A utility that wants to cease purchasing from a QF due to these operational circumstances must notify each affected QF in time for the QF to stop delivering energy or capacity. If the utility fails to provide adequate notice of a light loading period, it must reimburse the QF for energy and/or capacity as if the light loading had not occurred. The existence of a light loading period is subject to verification by the PSC (75).

The FERC rules for purchase power rates do not preclude negotiated agreements between cogenerators and electric utilities on terms that differ from the PURPA provisions. However, a QF that needs a long-term contract to provide certainty in return on investment can still obtain a purchase rate based on the utility's avoided costs, either by establishing a fixed contract price for energy and capacity at the avoided costs at the time of the contract or arranging to receive the avoided costs determined at the time of power delivery (75).

Finally, the FERC rules do not preclude States enacting laws or regulations that provide for purchase power rates that are higher than those that would obtain under PURPA. However, the States cannot require rates at less than full avoided costs because such lower rates would fail to provide the requisite encouragement to cogeneration and small power production (75).

As mentioned previously, the FERC rules for purchase power rates were challenged by the American Electric Power Service Corp. (AEP) and several other electric utilities, who argued that FERC'S requirement that purchase power rates equal the utility's full avoided costs forecloses the sharing of any of the benefits of the purchase with the utility's other customers, and thus contra-

venes the PURPA section 210 requirement that such rates be "just and reasonable to the electric consumers of the electric utility and in the public interest." The U.S. Court of Appeals for the District of Columbia Circuit held that Congress, in the statute, had clearly distinguished between a "just and reasonable" rate and one based on the full avoided cost, and that, although "the two may coincide," FERC had not adequately justified its adoption of a uniform full avoided cost standard (1).

In the preamble to its final rule on purchase power rates, FERC states that:

> The Commission interprets its mandate under section 21 O(a) to prescribe "such rules as it determines necessary to encourage cogeneration and small power production . . . " to mean that the total costs to the utility and the rates to its other customers should not be greater than they would have been had the utility not made the purchase from the qualifying facility (75).

FERC considered several alternative standards that would have set the purchase rate at less than full avoided cost, including rate standards based on a fixed percentage of avoided costs and on a "split-the-savings" approach. The commission noted that these pricing mechanisms would transfer to the utility's ratepayers a portion of the savings represented by the difference between the QF's costs and those of the utility, and thus would provide an incentive for the utility to purchase cogenerated power (75). The same argument was made by California utilities in opposing purchase power payments based on full avoided costs, but rejected by the Public Utilities Commission (see discussion of PURPA implementation, below) (lo).

However, FERC argued that, in most instances, the resulting rate reductions would be insignificant for individual ratepayers, while if the full savings were allocated to the QF they would provide a significant incentive to cogenerate. Furthermore, FERC felt that a "split-the-savings" approach would require a determination of the costs of power production in a QF—exactly the sort of cost-of-service regulation from which QFs are exempt under PURPA. FERC also argued that a fixed percentage standard would lead QFs to stop producing additional units of energy when their costs exceeded the price to be paid by the utility, and thus could force the utility to operate less efficient generating units or consume more premium fuels (l).

Based on these considerations, FERC determined that only a rate for purchases that equals the utility's full avoided costs for energy and capacity would simultaneously satisfy the statutory requirements that the rate be just and reasonable to ratepayers, in the public interest, and not discriminate against QFs, and fulfill the statutory mandate to encourage cogeneration.

The Court of Appeals ruled that FERC had appropriately rejected the split-the-savings approach because that would "veer toward the public utilities-style rate setting that Congress wanted to avoid" (1). However, the court recognized that other alternatives to the full avoided cost standard might allocate benefits between cogenerators and utilities more evenly without requiring an inquiry into the QF's production costs, and that FERC should take a harder look at these alternative approaches. In particular, the court stated that FERC should reconsider the percentage of avoided cost approach to determine whether it would disproportionately discourage cogeneration. The court argued that the "bare unquantified possibility that a rule permitting rates at less than full cost might be insufficient to encourage the last kilowatthour of cogeneration" is inconsistent with the clear intent of PURPA, which seeks to strike a balance among the interests of cogenerators, electricity consumers, and the public (l).

The court also outlined several additional ways that the avoided cost standard could disadvantage utility ratepayers, and specified that FERC should address these in its subsequent rulemaking. First, the commission should take into account, if possible, elements of utilities' avoided costs that cogenerators would not also have to pay (e.g., where the utility is subject to higher pollution control standards than a cogenerator, when a utility pays taxes at a higher rate than cogenerators). Second, FERC should consider a utility's capacity situation. If a utility has excess

capacity, cogeneration stimulated by full avoided cost payments may result in higher rates for the utility's remaining customers (without increasing the utility's total costs) due to the fixed cost declining demand situation, in which the cogenerator reduces the number of customer-purchased kilowatt-hours over which the utility can spread a share of the fixed costs of the extra capacity (see ch. 6). Third, the full avoided cost standard precludes consideration of competitive market forces, that might encourage utilities to purchase a substantial amount of cogenerated power at a price lower than the statutory ceiling (l).

As a result of all of the above considerations, the court held that FERC had not adequately justified its decision to prohibit any purchase power rates below full avoided costs, and vacated the FERC rate regulations and remanded the matter to the commission. However, the court emphasized that its holding:

> . . . should not be read as requiring FERC to establish different standards for a variety of cogeneration cases and methods. A general rule is acceptable, but the Commission must justify and explain it fully, particularly in its balancing of the interests of cogenerators, the public interest, and "electric consumers" (l).

As noted above, the U.S. Supreme Court has agreed to review the appeals court decision.

The purchasing utility normally will be the one with which a cogenerator is directly interconnected (i.e., the "local" electric utility). In some instances, however, either the cogenerator or its local utility may prefer that a second, more distant electric utility purchase the cogenerator's energy and/or capacity. For example, if the local utility has no generating capacity, its avoided cost will be the price of bulk purchased power, which ordinarily is based on the average embedded capacity cost and the average energy cost on the supplying utility's system. But if the QF's output were purchased by the supplying utility directly, that output usually would replace the highest cost energy on the supplying utility's system at the time of the purchase, and the QF's capacity may enable the supplying utility to avoid adding new generating plants. Thus, the avoided costs of the supplying utility may be higher than those of the local nongenerating utility.

Similarly, if the local utility has excess generating capacity and/or relatively inexpensive coal or other alternate-fueled baseload generation, its avoided energy costs could be quite low and it may not have any avoided capacity costs. A neighboring utility, however, may have excess load or expensive oil-fired baseload plants, and thus relatively high avoided costs.

For circumstances such as these, the FERC rules provide that a utility that receives energy or capacity from a QF may, with the consent of the QF, transmit that energy or capacity to a second utility. However, if the QF does not consent to transmission to another utility, the local utility retains the purchase obligation. Similarly, if the local utility does not agree to transmit the QF's energy or capacity, it retains the purchase obligation. Because the transmission can only occur with the consent of the utility to which the energy or capacity is first delivered, this rule does not constitute forced wheeling of power (75).

The FERC rule on transmission of cogenerated power to other utilities specifies that any electric utility to which such energy or capacity is delivered must purchase that energy or capacity under the same obligations and at the same rates as if the purchase were made directly from the QF. As discussed above, these rates should take into account any transmission losses or gains. If the electricity from the QF actually travels across the transmitting utility's system, the amount of energy delivered will be less than that transmitted, due to line losses, and the purchase rate should reflect these losses. Alternatively, the transmission can be fictionalized (as in simultaneous purchases and sales—see below). For instance, energy and/or capacity from a cogenerator may displace bulk power that would have been purchased by a nongenerating utility, as in the example cited above. In this case, the energy from the QF may replace a greater amount of energy than would have been purchased from the supplying utility (since the power from the latter is subject to greater line losses than the power from the QF), and the purchase rate should reflect the net transmission gain (72).

obligation to Sell.–Section 210(a) of PURPA also requires that each electric utility offer to sell electric energy to QFs. The FERC regulations interpret this obligation as requiring utilities to provide four classes of service to QFs: supplementary power, which is energy or capacity used by a QF in addition to that which it generates itself; interruptible power, which is energy or capacity that is subject to interruption by the utility under specified conditions, and is normally provided at a lower rate than non interruptible service if it enables the utility to reduce peakloads; maintenance power, which is energy or capacity supplied during scheduled outages of the QF–presumably during periods when the utility's other load is low; and backup power, for unsceduled outages (e.g., during equipment failure). A utility may avoid providing any of these four classes of service only if it convinces the PSC that compliance would impair its ability to render adequate service or would place an undue burden on the electric utility (73).

PURPA requires that rates for sales of these four classes of service be "just and reasonable and in the public interest, " and that they not discriminate against QFs. The FERC regulations implementing this requirement contemplate the formulation of rates based on traditional cost-of-service concepts (see discussion of rate regulation in the previous section), and specify that rates for sales to QFs shall be deemed nondiscriminatory to the extent that they apply to a utility's noncogenerating customers with similar load or other cost-related characteristics (73).

Thus, the FERC rules provide that rates for sales of power to QFs must reflect the probability that the facility will (or will not) contribute to the need for and use of utility capacity. If the utility must reserve capacity to provide service to a cogenerator, the costs associated with that capacity may be recovered from the cogenerator if the utility normally would assess these costs to noncogenerating customers. If the utility can demonstrate, based on accurate data and consistent system-wide costing principles, that the rate that would be charged to a comparable non-cogenerating customer is not appropriate, the utility may establish separate rates for QFs according to these data and costing principles. However, any such separate rates must still be nondiscriminatory, so that the cogenerator is not "singled out to lose any interclass or intraclass subsidies to which it might have been entitled had it not generated part of its electric energy needs itself" (73).

The FERC regulations also specify that rates for sales of backup and maintenance power may not be based, without adequate supporting data, on the assumption that all QFs will experience forced outages or other reductions in output either simultaneously or during the system peak. Thus, QFs are to be credited for either interclass or intraclass diversity to the same extent as noncogenerating customers, because such diversity will mean that utilities supplying backup or maintenance power to QFs probably will not need to reserve capacity on a one-to-one basis. In addition, rates for backup and maintenance power must take into account the extent to which a QF can usefully coordinate maintenance with the utility (74).

Simultaneous Purchase and Sale.–The FERC regulations specify that a utility must offer to purchase all of a cogenerator's electric power output at avoided cost rates regardless of whether that utility simultaneously sells power to the QF at standard retail rates (72). In effect, this rule separates the electricity production and consumption aspects of QFs, and thus equalizes the treatment of facilities which consume all the power they generate with that of cogenerators which sell some or all of their power (75).

AEP, et al., challenged this rule on the grounds that it misconstrued the statutory terms "purchase" and "sale," because it requires utilities to treat cogenerators as if they have engaged in a purchase and sale when in fact none might have occurred. The Court of Appeals disagreed, holding that FERC'S rule is consistent with PURPA. The court noted that the narrower construction of the statute urged by AEP would result—anomalously–in discriminatorily different treatment for cogenerators that use some or all of their power onsite and those that sell all their electric output. With such a narrow construction, cogeneration could be uneconomical because utility retail rates usually are lower than the utility's incremental energy and capacity costs and the cost of cogenerating.

AEP also argued that FERC did not adequately consider and explain its decision to require utilities to engage in the simultaneous transaction fiction. The court found that FERC had considered the impact of this rule on all interested parties and thus that the rule had been adequately justified (l).

Obligation to Operate in Parallel.–The FERC rules also require each electric utility to offer to operate in parallel with a QF, provided that the QF meets the State standards for protection of system reliability (71). By operating in parallel, a QF can automatically export any electric power that is not consumed by its own load. Thus, the same customer circuits can be served simultaneously by customer- and utility-generated electricity.

Obligation to Interconnect. -In their regulations implementing section 210 of PURPA, FERC argued that electric utilities' obligation to interconnect with QFs is subsumed within the purchase and sale obligations of section 210(a). Moreover, FERC noted that it has ample authority to require utilities to interconnect with QFs under the general mandate of section 210 that the commission prescribe "such rules as it determines necessary to encourage cogeneration and small power production" (75). Consequently, the FERC rules specified that "any electric utility shall make such interconnections with any qualifying facility as may be necessary to accomplish purchases or sales" (71).

AEP, et al., challenged this rule on the grounds that it was inconsistent with sections 202 and 204 of PURPA (which became sec. 210 and 212 of the Federal Power Act), as well as with PURPA section 210 itself. Section 202(a)(l) provides:

> Upon application of any electric utility, Federal power marketing agency, qualifying cogenerator, or qualifying small power producer, the Commission may issue an order requiring—
>
> (A) the physical connection of any cogeneration facility, any small power production facility, or the transmission facilities of any electric utility, with the facilities of such applicant.

In issuing an order under section 202(a)(l), the Commission must issue notice to each affected party and afford an opportunity for a full evidentiary hearing under the Administrative Procedure Act.

Section 202(c) states that FERC may not issue an order under 202(a)(l) unless FERC determines that the order:

(1) is in the public interest,
(2) would–
  (A) encourage overall conservation of energy or capital,
  (B) optimize the efficiency of use of facilities and resources, or
  (C) improve the reliability of any electric utility system or Federal power marketing agency to which the order applies, and
(3) meets the requirements of section [204].

The requirements of section 204 are that FERC determine that an order issued under section 202(a)(l):

(1) **is not likely to result** in a reasonably ascertainable uncompensated economic **loss for any electric utility, qualifying cogenerator, or qualifying small power producer . . . affected by the order;**
(2) will not place an undue burden on an electric utility, qualifying cogenerator, or qualifying small power producer . . . affected by the order;
(3) will not unreasonably impair the reliability of any electric utility affected by the order; and
(4) will not impair the ability of any electric utility affected by the order to render adequate service to its customers.

Finally, while section 21 O(e) of PURPA authorizes FERC to exempt QFs from provisions of the Federal Power Act, it specifically excludes sections 202 and 204 from such exemption.

In the AEP case, FERC argued that compliance with sections 202 and 204 of PURPA would impose an undue burden on cogenerators and thus would be contrary to the entire thrust of sections 201 and 210. in particular, FERC noted that in enacting sections 201 and 210, Congress had already determined that QFs serve the purpose of the act to optimize the efficiency of use of facilities and resources by electric utilities, and thus it would be both redundant and unduly burdensome to require QFs to meet all the requirements of sections 202 and 204 in order to sell power to the grid.

However, the U.S. Court of Appeals agreed with AEP, holding that FERC'S rule requiring interconnection was inconsistent with PURPA. The court noted that FERC, in promulgating an interconnection rule that is consistent:

> need not impose substantial administrative burdens on those facilities, but rather can adopt streamlined procedures. If the Commission believes that even streamlined procedures are too burdensome, the necessary amendment must come from Congress (1).

In its petition for rehearing of the AEP decision, FERC emphasized the basic intent of PURPA to encourage cogeneration, and argued that, without the interconnection requirement, the obligation to purchase and sell is meaningless. FERC also contended that PURPA section 210 is independent of, and does not amend, the Federal Power Act, and thus the interconnection requirement must be read into PURPA and the section 202 and 204 provisions interpreted as an alternative means of obtaining interconnection.

If the AEP decision is upheld by the Supreme Court, then QFs who cannot get a utility to agree to interconnect will have to apply for a FERC order under the procedures outlined in section 202(a)(l), and thus meet the evidentiary requirements of sections 202 and 204. However, the requirements of sections 202(c) and 204 would be very difficult and expensive for a QF to meet. Even in well-understood situations, the expenses and delays associated with evidentiary hearings under the Administrative Procedure Act will deter all but those who have a pressing need for an administrative order. But the multiple stringent legislative tests of sections 202(c) and 204 are couched in new, broad language that will have to be construed, first, by FERC and then, in all likelihood, by the courts. Thus, these provisions pose a substantial deterrent to cogenerators that cannot get an electric utility to voluntarily interconnect with them–exactly the problem PURPA was intended to remedy. Options for resolving this issue are discussed in chapter 7.

Under the FERC regulations implementing PURPA, a QF must reimburse any electric utility that purchases energy or capacity from the facility for interconnection costs. These costs are defined in the regulations as:

> . . . the reasonable costs of connection, switching, metering, transmission, distribution, safety provisions, and administrative costs incurred by the electric utility and directly related to the installation and maintenance of the physical facilities necessary to permit interconnected operations with a qualifying facility, to the extent that such costs are in excess of the corresponding costs which the electric utility would have incurred if it had not engaged in interconnected operations, but instead generated an equivalent amount of electric energy itself or purchased an equivalent amount of electric energy or capacity from other sources (68).

Interconnection costs must be assessed on a nondiscriminatory basis with respect to noncogenerating customers with similar load characteristics, and may not duplicate any costs included in the avoided costs (74). Standard or class charges for interconnection may be included in purchase power tariffs for QFs with a design capacity of 100 kW or less, and PSCS may also determine interconnection costs for larger facilities on either a class or individual basis.

State regulatory commissions have the authority to ensure that utility requirements for system safety equipment and other interconnection requirements and their associated costs are reasonable. In practice, utility interconnection requirements vary widely (see ch. 4) and few PSCS have addressed the interconnection question directly.

OTHER PURPA BENEFITS

Qualifying cogenerators are exempt from regulation as a public utility or a utility holding company under the Federal Power Act and PUHCA, and from State laws regulating the rates, structure, and financing of utilities. However, if a regulated electric utility owns more than a 50-percent equity interest in a qualifying cogenerator, the cogenerator will be subject to the traditional jurisdiction of ratemaking authorities to the extent of utility ownership. In addition, qualifying cogenerators may be eligible for an exemption from the FUA prohibitions on oil and gas use and from the incremental pricing provisions of NGPA.

IMPLEMENTATION OF SECTION 210

The FERC regulations on section 210 of PURPA required State public utility commissions (PUCS) to begin implementation of the regulations by March 1981. Since that time, a wide range of draft and final rules have been issued by the States, and utilities have published a variety of tariffs for cogenerated power (see table 19). The State PUCS have taken full advantage of the procedural latitude allowed by the FERC rules, using rulemaking, adjudication, and dispute resolution to es-

Table 19.—Rates for Power Purchased From QFs by State-Regulated Utilities

Utility	Energy payments (cents/kWh)	Capacity payments ($/kW-yr)	Comments
Alabama			Nuclear 24%, coal 58%, oil 1%, gas 3%, hydro 14%.
Alabama Power Co.	2.59 on-peak, June-October 2.17 off-peak, June-October 2.14 on-peak, November-May 2.05 off-peak, November-May		Off peak purchase rates are offered for utilities without time-of-day metering. Rates are for facllities less than 100 kW.
Arkansas			Nuclear 17%, coal 9%, oil 44%, gas 10%, hydro 20°A
Arkansas Power & Light Co.	Reverse metering currently used		Comments on proposed rates were due by June 1, 1981.
California			Nuclear 4%, oil 67%'., gas 1%, hydro 25%, other 3%.
Pacific Gas & Electric Co.	6.58 on-peak 6.219 mid-peak 5.553 off-peak 6.030 non-TOD	$0.75-$1.50/kW-month	Rates are for February-April 1981.
Southern California Edison	6.6 on-peak 6.0 mid-peak 5.8 off-peak 6.0 non-TOD	25% of full value	Rates are for February-April 1961.
San Diego Gas & Electric Co.	8.333 on-peak 7.069 mid-peak 6.225 off-peak 6.850 non-TOD	$0.70-$2.00/kW-month	Rates are for February-April 1981.
Connecticut			Nuclear 38%, oil 80°/0, hydro 2%.
Connecticut Light & Power Co. and Hartford Electric Light Co.	*Firm power* 6.7 on-peak (114.5% of fossil fuels cost) 5.4 off-peak (90.5% of fossil fuels coat) *Nonflrm power* *6.6* on-peak (110% of fossil fuels cost) 5.2 off-peak (86.5% of fossil fuels cost)		Purchase rates are temporarily In effect pending approval of utllity proposals. Percentage is tied to monthly fuel adjustment. Firm power rates are for facilities greater than 100 kW. Off-peak purchase rates are offered for facilities without tlme-of-day metering. No size restrictions apply to non-flrm facilities.
Idaho			Oil 1%, gas 3%, hydro 96%
Utah Power & Light Co.	*Firm power* 1,2 *Non.firm power 2.6*	88-268 Increasing with contract length 4-35 years.	The Idaho PUC has ordered UP&L to add some capacity credit to the non-flrm energy payment.
Washington Water Power Co.	Firm *power* 1.6 *Nonfirm power 2.4*	96-280 Increaslng with contract length 4-35 years. 0.3cents/kWh	
Idaho Power Co.	*Firm power 1.639* *Nonflrm power* *1.41-3.86* (varies each month, 2.4 average)	116-318 Increasing with contract length 4-35 years.	Rates are for facilities less than 100 kW. The Idaho PUC has ordered IPC to add some capacity credit to the non-flrm energy payment.
Illinois			Nuclear 19%, coal 57%, oil 23°/0, < 1% gas, <1 % hydro, 1 % other.
Illinois Power	2.42 on-peak summer 1.55 off-peak summer 2.65 on-peak winter 1.88 off-peak winter Non-TOO: 1.89 summer 2.18 winter		
Commonwealth Edison	5.31 on-peak summer 2.90 off-peak summer 5.17 on-peak winter 3.37 off-peak winter		1,000 kW or less.
Central Illinois Light Co.	34 *kV or greater* *2.3* on-peak 2.1 off-paak 12 kV *to 34* kV: 2.4 on-peak 2.2 off-peak Less than 12 *kV:* *2.5* on-peak 2.3 off-peak		

Table 19.—Rates for Power Purchased From QFs by State-Regulated Utilities-Continued

utility	Energy payments (Cents/kWh)	Capaclty payments ($/kW-yr)	Commenta
Interstate Power Co.	2.45 on-peak, June-September 2.05 off-peak, June-September 2.19 on-peak, October-May 2.05 off-peak, October-May		
Central Illinois Public Service	1.978 on-peak summer (3 months) 1.620 off-peak summer 1.884 on-peak winter (3 months) 1.861 off-peak winter 1.805 on-peak (rest of year) 1.565 off-peak		
South Beloit Water, Gas & Electric Co.	2.30 on-peak 1.70 off-peak		
Union Electric	*Non. TOD:* 1.77 summer 1.53 winter *TOO:* *2.41* on-peak summer 1.36 off-peak summer 1.50 summer, weekends and holidays 1.86 on-peak winter 1.35 off-peak winter 1.35 winter, weekends end holidays		
Indiana			Nuclear O%, coal 89%, oil 8%, gas < 1%, hydro 1%, other 2%.
Indiana & Michigan Eiectric Co.	*TOQ:* 1.36 on-peak 0.81 off-peak *Non.TOD: 0.81*		
Indianapolis Power & Light	*1.14* general rate *Seaaonal:* 1.19 on-peak summer 1.07 off-peak summer 1.28 on-peak winter 1.08 off-peak winter		
Northern Indiana Public Service Co.	2.62 on-peak summer 2.29 off-peak summer 2.61 on-peak winter 2.29 off-peak winter *Norr. TOD seasonal:* 1.86 summer 1.83 winter		
Public Service Co. of Indiana	1.33		
Southern Indiana Gee & Electric	1.49 on-peak summer 1.02 off-peak summer 1.15 on-peak winter 1.00 off-peak winter		
Richmond Power & Light	0.914		
Kansas			Coal 35%, Oil 11%, gas 55%.
Kansas Power & Light	1.60		Rate is for a cogenerator on-line since the 1920's.
Massachusetts			Nuclear 9%, coal O%, oil 72%, gas <1%, hydro 18°/0, other 1%.
Boston Edison	6.971 on-peak 4.047 off-peak 5.543 flat		
Commonwealth Electrlc	7.16 on-peak 6.15 off-peak 6.51 flat		Interim rates. Energy rates wlll be reset every 3 months when fuel adjustment is figured. QFs of 30 kW or less can use reverse metering.
Eastern Edison	8.792 on-peak 5.161 off-peak 5.995 fiat		
Massachusetts Electric	5.51 on-peak 4.79 off-peak 5.08 fiat		
Cambridge Electric	7.22 on-peak 5.91 off-peak 6.34 fiat		
Nantucket Electrlc	7.44		
Manchester Electric	4.748		
Fitchburg Gas & Eiectrtc	6.081 on-peak 3.313 off-peak 4,940 flat		
Western Massachusetts Electric	5.813 on-peak 4.238 off-peak 4.979 flat		
Michigan			Nuclear 14°/0, coal 47%., oii 230/o, gee 4%, hydro 11 O/., other 1'/0.
Statewide purchase rate includes: Consumers Power Co. and Detroit Edison	2.5		This rate was established prior to PURPA compliance. New purchase rates implemented in March or April of 1982.
Mlnnesota			Nuclear 21%, coal 55°/0, oil 19%, gas 1%, hydro 2%, other 2%.

Table 19.—Rates for Power Purchased From QFs by State"Regulated Utillties—Continued

utility	Energy payments (cents./kWh)	Capacity paymenta ($/kW-yr)	Comments
Northern States Power Co,	*Firm power* **2.08-3.07 increasing** with contract length 5-25 years. *TOD metering service:* *2.15* on-peak 1.39 off-peak *Nonfirm power :* 1.35 *Occasional power* 1.66		Temporary rate schedule in effect until further studies are completed. These rates are intended to comply with PURPA requirements and are restricted to facilities less than 100 kW. Capacity credits are included in firm power purchase rates. Non-firm power rates take effect in the event that a firm producer does not provide dependable generation. Occasional power is limited to 500 kWh/month.
Montana			Nuclear 0%, coal 32%, oil 5%, gas 1%, hydro 61 O/., other 1%.
Montana Power	2.7842	77.24 (25-yesr contract only)	
Montana-Dakota	*Nonfirm power* *2.21* on-peak 1.57 off-peak *Non firm, non-TOD: 1.91* *Firm power:* *1.97-3.08* (depending on contract length)		Non-firm rates for QFs of 100 kW or less.
Pacific Power & Light	1.34-1.88	3.75-7.37 per kW-month	
Nebraska			Nuclear 26°/0, coal 48°/0, oil 130A, gas 9%., hydro 30A, other 3%.
Omaha Public Power District	*TOD metering:* 1.60 on-peak summer 1.00 off-peak all year 1.20 on-peak winter *Standard rate:* 1.10		Rates apply to facilities of 100 kW or less.
Nevada			Nuclear O°/., coal 540/', oil 5%, gee 23%, hydro 18%.
Idaho Power	1.71 (February)- 4.16 (August)	116.00-263.00 (1981)	Energy payments vary monthly. Capacity payments vary by length of contract.
Sierra Pacific	4.09	6.1cents/kWh	
Nevada Power Co.	3.802 on-peak, October 1961	8.55 on-peak October 1981	Energy payments and capacity payments vary monthly.
	1.943 off-peak, October 1981	0.07 off-peak October 1961	
	3.528 on-peak, November 1981	0.14 on-peak November 1981	
	2.331 off-peak, November 1981	0.00 off-peak November 1981	
	4.311 on-peak, December 1981	0.14 on-peak December 1981	
	2,630 off-peak, December 1981	0.00 off-peak December 1981	
New Hampshire			coal 30%, oil 47 %, hydro 23%.
Statewide rate	*Firm power* 8.2 *Nonfirm power 7.7*		Granite State Electric Utility is not required to pay the firm power rate due to excess capacity.
New Jersey			Nuclear 14%, coal 13%, oil 690/', gas 1%, hydro 3%.
Jersey Central Power and Light Co.	*Approximate only:* *6.0-7.5* on-peak 2.0-5.0 off-peak		Actual rates are determined by averaging marginal energy rates for previous 3-month on-peak and off-peak hours. The rate appiies to facilities between 10 and 1,000 kW.
Atlantic City Electric Co.	*Temporary rate: 2.5*		This October 1980 rate was greater than average energy costs. The utility has proposed that buyback rates may be set at time of interconnection.
New York			Nuclear 13%, coal 8%, oil 83%, hydro 15%°, gas and other 1%.
Statewide minimum rate includes: Long island Lighting Co., Niagara Mohawk Power Co., New York State Electric & Gas CO., Consolidated Edison, Orange & Rockland Utilities, Inc., Central Hudson Gas & Electric Corp. and others	6.00 minimum		
North Carolina			Nuclear 110/0, coal 71%, oil 6%, hydro 12%.
(Note: North Caroiina capacity payments are given as cents/kWh not $/kW-yr as shown above.)			
Carolina Light & Power Co.	2.60-5.55 on-peak	1.49-2.39 summer month	Rates increase with contract length.
	2.074.04 off-peak	1.29-2.08 non-summer months	
Duke Power Co.	2.38-5.20 on-peak	1.11-1.88 on-peak months	Rates increase with contract length.
	1.78-3.91 off-peak	0.68=1.00 off-peak months	
Virginia Electric & Power CO.	4.23-9.30 on-peak summer 3.59-4.30 peak non-summer 2.82-5.77 all others	1.61-2.50 summer 1.42-2.25 non-summer	Rates increase with contract length.
Nanthahala Power & Light Co.	2.05	2.50	NP&L purchases power from TVA.
North Dakota			Coal 82%, oil 4%, hydro 14%.
(Note: proposed rates–not yet finished.)			
Northern States Power Co.	2.15 on-peak 1.39 off-peak	2.06-3.07 (cents/kWh)	Rates apply to facilities less than 100 kW. Capacity payments increase with length of contract 5-25 years. Facilities larger than 100 kW treated case-by-case.

Table 19.—Rates for Power Purchased From QFs by State-Regulated Utilities—Continued

Utllity	Energy payments (cents/kWh)	Capacity payments ($/kW-yr)	Comments
Okiahoma			Nuclear O%, coal 20%, oil 3%, gee 65°/0, hydro 80A, other 40/o.
Statewide rate schedule includes: Oklahoma Gas & Electrlc Co. Public Service Co.	0.66-3.05 depending on firmness of capacity		Formulae have been established to treat purchase rates for various types of small power producers. Both energy and capacity components are considered.
Oregon	Reverse metering currently used		Nuclear 12%, coal 00/', oil 70A, gas 1%, hydro 78°/0, other 2%.
Rhode Island			Nuclear O%, coal O%, oil 99%, gas O%, hydro 1 %.
New England Power Co.	5.5247 on-peak 4.5339 off-peak 4.9643 average		
Blackstone Valley Electric Co.	*Primary:* *6.412* on-peak 4.642 off-peak 5.511 average *Secondary:* *6.726* on-peak 4.965 off-peak 5.723 average		
Newport Electric Co.	4.473 on-peak 4.093 off-peak 4.317 average		
South Carolina			Nuclear 29%, coal 300/., oil 210/0, hydro 19°/0, gas and other 1%.
Carolina Power & Light Co.	2.60 on-peak 2.07 off-peak	46.68 summer 40.20 non-summer	Rates are for facilities less than 5 MW.
Duke Power Co.	1.96 on-peak 1.49 off-peak	60.00 (Based on integrated capacity during peak months June-September, December-March).	
Utah			Coal 86%, oil 2%, gas 2%, hydro 1O%.
Utah Power & Light Co.	2.2 (temporary rate)	2.6cents/kWh	Purchase rates are for facilities less than 1,000 kW (100 kW for hydro). Larger facilities are considered case-by-case (up to 3.5cents/kWh).
C.P. National	2.2 (temporary rate)	2.66cents/kWh	
Vermont			Nuclear 57%, coal 3%, oil 16°/0, hydro 24%.
Statewide rate schedule	7.8 standard rate TOD *rates:* *9.0* on-peak 6.6 off-peak		Avoided costs are higher than would be expected from Vermont's capacity mix due to dispatch and accounting practices of NEPOOL.
Wisconsin			Nuclear 17%, coal 59%, oil 170/., gas 20/., hydro 5°/0.
Wisconsin Power & Light Co.	1.60 on-peak 1.75 off-peak (includes capacity)		Purchase rates are for facilities less than 200 kW. Larger facilities are treated case-by-case.
Madison Gas & Electric Co.	2.75 on-peak summer 1.50 off-peak summer 2.22 on-peak winter 1.50 off-peak winter		Purchase rates are for facilities less than 200 kW. Larger facilities are treated case-by-case.
Wisconsin Electrlc Co.	*Firm power:* *3.65* on-peak summer 1.45 off-peak summer 3.45 on-peak winter 1.45 off-peak winter *Non firm power:* *2.90* on-peak 1.45 off-peak		
Northern States Power Co.	*For 20 kW or less:* *1.81* on-peak 1.14 off-peak *For 21-500 kW after 1986:* 1.60 on-peak 1.14 off-peak	$4/kW/month S4/kW-month	Prior to 1966 the rates for 20 kW and less apply to 21-500 kW. No capacity credits will be paid until after 1966. Facilities greater than 500 kW are treated case-by-case.
Lake Superior District Power Co.	1.90	S6.02/kW-month	Purchase rates are for facilities between 6 and 200 kW. Smaller facilities receive no payments. Larger facilities are considered case-by-case.
Wisconsin Public Service Corp.	1.65 on-peak 1.32 off-peak	To be determined according to characteristics of each facillty.	
Wyoming			Coal 93%, hydro 6%, oil and gas 10/..
(Note: All of the Wyoming purchase rates are "experimental.")			
Utah Power & Light Co.	*Non-firm power: 2.2* *Firm power 2.6*		Purchase rates are for facilities less than 100 kW.
Cheyenne Light, Fuel and Power Co.	*0.53*	Available on demonstration of demand reduction.	
Tri-County Electric Association	1.07		This is a non-generating utility which has based its avoided costs on wholesale supply rates.
Montana-Dakota Utilities Co.	0.405	Available on demonstration of capacity displacement or demand reduction potential.	

SOURCE: Reiner H. J. H. Lock and Jack C. Van Kuiken, "Cogeneratlon and Small Power Production: State Implementation of Section 210 of PURPA," 3 *Solar L Rep. 659* (November-December 1961).

tablish rates and operating criteria. These procedures have resulted in a wide diversity in State approaches to PURPA as well as in the rates established thereunder. A comprehensive survey of State implementation actions and cogeneration potential is beyond the scope of this assessment. Moreover, the status of these actions is uncertain due to the Court of Appeals case discussed above. Therefore, this section will present case studies based on the implementation of title II in three areas: California, where cogeneration has a potentially large market and the State government is actively promoting its use; Illinois, where cogeneration's technical potential could be significant but the market will be limited by the electric utilities' large construction budget; and New England, where existing excess capacity, extensive pooling agreements, and planned conservation measures will influence cogeneration's market potential. It should be emphasized that these case studies do not typify the range of State and utility actions on PURPA. Rather, they represent examples of three kinds of planning situations that will affect PURPA'S implementation. The same case study areas are used in the analysis of cogeneration's potential impacts on utility planning and regulation in chapter 6.

California.—The dominant factor in California utilities' capacity planning is not demand growth, but the need to reduce their dependence on oil. Planning and construction of new coal and nuclear baseload facilities was limited during the 1970's as demand growth declined, and cancellations and postponements of coal and nuclear capacity left the State's utilities heavily dependent on oil and natural gas. The California Energy Commission's (CEC) 1981 final report on electricity projects an annual energy growth rate (measured in GWh) of less than 1.5 percent through 1992, but a capacity growth rate of approximately 2.5 percent per year (5). The capacity growth rate is higher because it includes a projected 30-percent reserve margin (in case the energy growth rate is higher than 1.5 percent), the replacement of retired powerplants and expired purchase power contracts, and the reduction of utility oil and gas consumption Statewide to one-half the 1979 level by 1992.

The CEC report identifies three priorities that should be sufficient (according to the report) to provide the needed energy and capacity for the 1980-92 period: 1) additional conservation and power pooling; 2) geothermal and renewable resources (biomass, wind, solar, small hydro, and existing reservoirs); and 3) cogeneration and interstate electricity transfers. CEC estimates that cogeneration could provide up to 3,000 MW of generating capacity by 1992. Their estimate is bracketed by the California utilities' long-range resource plans, which project 1,900 MW of cogeneration capacity by 1992, and the Natural Resources Defense Council estimate of 4,300 MW by 1995 (5).

State regulators in California had taken a number of regulatory actions favoring cogeneration even before the FERC rules implementing PURPA section 210 became final. The California Public Utilities Commission (CPUC) investigated the role of cogeneration in utility resource planning (see fig. 13) and, in 1979, ordered Pacific Gas& Electric (PG&E), in particular, and all of the State's electric utilities in general, to adopt a specific timetable for bringing cogeneration capacity into the electrical system. Under the CPUC order, PG&E was expected to bring 2000 MW of cogeneration into the resource base by 1985, principally through contracts tied to the avoided cost of oil-fired utility capacity that is displaced (8). In a companion decision (this time in a PG&E general rate case), CPUC imposed a rate-of-return penalty on the company's electric division for failure to implement cogeneration projects aggressively. The penalty, which represented over $7 million in annual revenues, or 0.2 percent in return on equity, was to be restored if PG&E brought 600 MW of cogeneration capacity under contract by 1982 (7). Although PG&E was not able to meet this goal, the CPUC staff recommended, late in 1981, that the penalty be discontinued because the utility's performance in encouraging cogeneration has been adequate (41).

PG&E planners argue that the CPUC goals of 2,000 MW by 1985 are unrealistic. In a major planning study, PG&E estimated the cogeneration market potential in their service area to be between 204 and 903 MW of capacity additions

Figure 13.–Statewide Utility Resource Plan Additions 1981=82: Renewable/Innovative Technologies

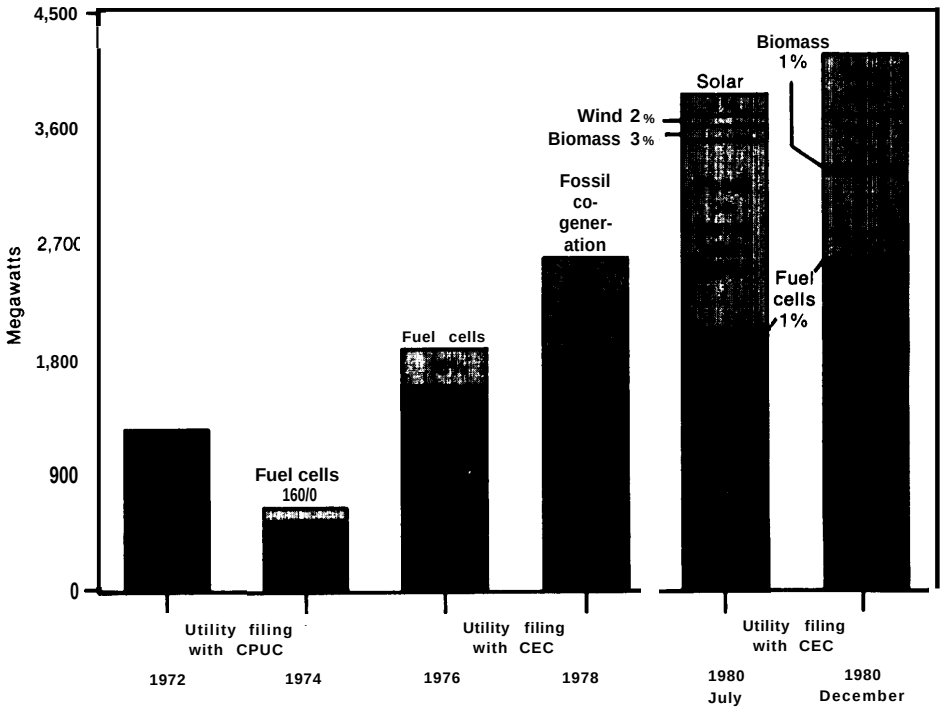

SOURCE: California Energy Commission, Electricity *Tomorrow: 1981 Final Report* (Sacramento, Callf.: *Ca/item/a* Energy Commission, 19S1).

by 1990 (beyond the 472 MW already operating), and their long range resource plan projects 190 MW additional cogeneration capacity by 1985, and 600 MW by 1992. PG&E's anaiysis suggests that industry would have to commit approximately 12.5 percent of their total annual capital expenditures to cogeneration in order to meet the CEC goal of 2,000 MW under contract by 1985 (41).

The California regulatory climate is unique. In no other State has the public utility commission participated so actively in capacity and resource planning. Encouraging cogeneration is an explicit policy expressed in price signals to the utility and from the utility to the potential cogenerator. Despite these attitudes that favor cogeneration development, however, there remain significant questions and uncertainties about the amount of cogeneration capacity that can be counted on, and thus about the other types of capacity additions that may be needed.

one major difficulty in assessing the extent of future cogeneration development in California lies in the special nature of the market, namely, the potential for large enhanced oil recovery cogeneration projects. The heavy oilfields in Kern County, Calif., require steam injection or other advanced techniques for economic production. Converting existing steam boilers in these fields to cogeneration would involve projects with 200 to 300 MW of generating capacity. CEC has studied at least six of these projects, and one contract has been signed for 66 MW. Aggregate cogeneration potential in the California oilfields has been estimated by various sources to be between 700 and 10,000 MW or more, depending on the price of oil and the cogeneration technology employed (5,6,31 ,59).

In January 1982, CPUC issued their final decision on rates and other standards for cogeneration and small power production pursuant to the FERC rules implementing sections 201 and 210

of PURPA. In general, this decision, known as OIR-2, requires utilities to file standard offers applicable to QFs larger than 100 kw and tariffs for smaller facilities. Both the standard offers and the tariffs are complete packages that include prices for power purchases and sales, requirements for interconnection, and other relevant factors. Once a utility's tariff and standard offer terms are approved by CPUC, purchases can be made under them without further administrative review, and the utility can recover its expenses for such purchases through an energy cost adjustment clause in the same manner as it recoups other purchase power expenses (10).

Under OIR-2, utilities must file an array of standard offers based on different terms and conditions in order to provide QFs larger than 100 kw with a sufficiently wide choice of options to meet their particular needs, and thus to minimize the use of nonstandard contracts that would have to be reviewed individually by CPUC. In general, these include standard offers for energy and capacity delivered by a QF both "as-available" and under a firm contract, and for energy and capacity prices based on both the utility's shortrun and longrun marginal cost.

Standard offers for "as-available" energy and capacity are based on the utility's avoided cost at the time of delivery, which is the cost the utility would have to incur to produce an equivalent amount of power at that time, or the utility's shortrun marginal cost. The energy component of this standard offer is defined as the highest variable operating cost per unit of electricity produced at a given time, and equals the product of: 1) the purchase price of oil used as the marginal fuel over the last 3 months, and 2) the forecast incremental heat rates* of the plants actually used by the utility to follow load. The as-available energy price also includes an aggregate adjustment for transmission and distribution costs and line losses or savings. In OIR-2, CPUC decided that it was not reasonable to treat these costs on an individual basis except for facilities larger than 1 MW at remote sites.

*Heat rate is a measure of thermal efficiency expressed in Btu input per net kilowatthour output (see ch. 4). The marginal, or incremental, heat rate is calculated as the additional (or saved) Btu to produce (or not produce) the next kilowatthour.

The as-available capacity payment equals a marginal shortage cost that reflects the effects of the added increment of production on reserve margins and reliability, and is determined based on the 1982 estimated cost of peaking capacity (represented by a combustion turbine). This capacity payment is in cents/kWh varying by time of delivery, and is available only for energy delivered through a meter to the utility. Thus, simultaneous purchase and sale QFs will receive the capacity value for all the electricity they generate because their entire output is metered at the generator before any goes to the QF's load or the utility. Other QFs will only receive the capacity value of the electricity actually delivered to the utility (10).

Standard offers for energy and capacity delivered under long-term contracts can be based on either the utility's shortrun or longrun marginal cost. For shortrun marginal costs, energy prices can be contracted for up to 5 years based on a forecast of the utility's variable operating cost (described above). The QF must commit to deliver all the electricity it produces to the utility over the contract period. These contractual energy payments can be combined with either as-available capacity payments or with firm capacity payments based on shortrun marginal costs (1 O).

Firm capacity is equivalent to an increase in supply with corresponding standards, termination provisions, and sanctions regarding dispatchability, reliability, availability, and other factors specified in the FERC rules. The value of each of these factors is calculated based on the same performance standards utilities impose on their own generating plants. If a QF exceeds utility standards, its capacity value should be increased correspondingly. The sum of each of these factors determines the overall capacity value, which is to be offered on both a $/kW/yr and a cents/kWh basis (10).

Alternatively, QFs can choose a contract period of up to 25 years with a firm pricing structure for energy and capacity based on the utility's longrun marginal costs. This standard offer option was included due to concerns that shortrun marginal costs would be too volatile to provide financial certainty and would not adequately reflect a QF's value in the utility's long-range

resource plans. The longrun marginal costs are estimated based on the fixed costs associated with the utility's resource plan and the corresponding system projected marginal operating costs (10).

Standard tariffs for QFs smaller than 100 kW provide for purchase power payments in cents/kWh calculated in the same manner as the as-available rates for larger facilities (described above). These tariffs may be time-differentiated, but if a small QF chooses not to buy a time-of-use meter, the utility may offer capacity payments that aggregate over 1 year to 50 percent of the capacity provided by facilities with such meters (lo).

Both standard offers and tariffs also provide for sales of supplementary, backup, maintenance, and interruptible power to QFs. The first three normally are provided under the regular rate schedules applicable to all customers of the same class. However, the demand charges associated with such rates are substantially lower for QFs than for other customers, and may be waived if the facility maintains an 85-percent on-peak capacity factor. Interruptible rates apply to QFs to the extent their generation is used to serve their own load (10).

Finally, CPUC allows nonstandard offers (those that vary from the terms described above) when they are necessary to shift some of a project's risk from the QF to the ratepayers (e.g., in the case of debt guarantees, levelized payments, or payment floors). in return for accepting such risks, ratepayers are afforded some reduction on avoided cost payments. In general, the reasonableness of nonstandard offers will be determined during the annual review of energy cost adjustment clauses or other normal rate proceedings. However, during the first 2 years of OIR-2'S implementation CPUC will provide advance review of those nonstandard offers about which a utility has significant questions (10).

It is not clear how the California Public Utilities Commission would revise OIR-2 in the event that the FERC regulations implementing PURPA are revised to require payments for QF power at less than the utility's full avoided cost. The utilities have argued that full avoided cost payments based on their highest variable operating cost, as determined by the price of oil used on the margin, does not reflect the utilities' actual fuel mix, and thus does not allow ratepayers to share the benefits of QF generation at a cost potentially below the utility's marginal cost, nor does it compensate utilities or their shareholders for the potentially higher risks of reliance on QF energy and capacity. In issuing OIR-2, CPUC considered arguments by the patties that full avoided cost payments disadvantage ratepayers (the same argument accepted by the U.S. Court of Appeals against the FERC rules, as discussed previously). However, CPUC found that only full avoided cost payments would parallel the prices that would be established in a competitive market, and thus give consumers an efficient price signal and "encourage the fullest possible efficient development of QF resources that can effectively and economically compete with utility resources" (1 O).

On the other hand, CPUC did explicitly recognize that payments at less than the full avoided cost are appropriate when some of the risk of investing in QFs is transferred to the ratepayers. CPUC also requested comments from interested parties on whether utilities should receive a percentage of the avoided cost (e.g., one-half of 1 percent) as a brokerage fee for serving as intermediaries between QFs and electricity consumers. However, in such a scheme, the full avoided cost would still be passed on to ratepayers through the energy cost adjustment clause (lo).

It is instructive to contrast the California cogeneration planning situation with roughly analogous efforts in New York by the Consolidated Edison Co. (ConEd). The potential cogeneration market in ConEd's service territory may be large, but the principal ConEd customers likely to cogenerate are large commercial buildings. Their primary economic motive would be to avoid high electricity bills, and they are less likely to sell excess power to the utility than California projects. Given the large number and homogeneity of ConEd's potential cogenerators, it is possible to analyze the market systematically.

Con Ed constructed a model of the cogeneration investment decision that calculates the costs and benefits of investing in cogeneration and

measures the internal rate of return from such investments. Where this return, on an aftertax basis, would be 15 percent or better over a 10-year horizon, Con Ed assumed the investment would be made. In order to estimate market size, this model was applied to the load data describing ConEd's 4500 largest customers. Depending on input assumptions, Con Ed found a high range of up to 750 potential cogenerators with a combined peakload of 1,483 MW, and an expected outcome or base case of 395 cogenerators with a combined peakload of 1,086 MW. ConEd has used this model to characterize the sensitivity of market size to the policies that would reduce their "loss exposure" to cogeneration (48).

ConEd's loss exposure stems from a fixed-cost/declining demand problem. Because demand is not expected to grow, cogenerators leaving the system will shift a burden of fixed costs onto the other remaining customers. This would not be a problem if there were enough new kWh sales or customers to replace the cogenerators leaving the system, but ConEd does not anticipate such growth. Situations such as the fixed-cost/declining demand problem, in which cogeneration has a potential to operate to the financial detriment of utilities, are discussed in more detail in chapter 6.

If State regulators are asked to protect utility sales from loss exposure, the utilities must demonstrate that the problem is real and substantial in magnitude. ConEd's cogeneration model purports to make such a demonstration. However, the New York Public Service Commission (NYPSC) argued that the model results were extremely sensitive to input assumptions, and asked Con Ed to run the model using slightly higher costs for cogenerators but holding utility rates constant. The result was an extremely small market potential, with only 27 customers (130 MW of peakload) leaving the system (48). At this level of loss, there is no substantial economic threat to Con Ed. The NYPSC staff argued further that the actual market may be either smaller or larger than this estimate, and until market penetration is more certain, no policy changes are needed to protect ConEd's sales from loss exposure.

This loss exposure problem has not arisen in California. Thus, while CPUC is creating a climate favorable to large-scale cogeneration development, it also is encouraging or ordering utilities to aggressively pursue conservation plans, including developing investment/finance plans for residential weatherization and solar water heating retrofit (9).

Illinois.–Electric utilities in Illinois currently are engaged in a massive construction program that began before the 1973 escalation in oil prices. The largest companies, Commonwealth Edison (CWE) and Illinois Power (1P) are most heavily involved in new construction. CWE has six nuclear units at various stages of completion, while 1P, a company roughly one-fifth the size of CWE, has one.

The financial burden of this construction has become increasingly onerous as utility kwh sales growth has lagged behind expectations. In the case of CWE, the strain has appeared in the rapid decline of their bond rating. In June 1980, Standard and Poor's lowered the rating on CWE debentures and pollution control bonds to BBB, the lowest rating acceptable to institutional investors. The rapid downgrading threatens to limit the market for CWE debt securities, because investors may not want to risk the possibility of further rating cuts (35).

Moreover, in order to finance their $1 billion per year construction program, CWE needs more cash income. In 1979, CWE reported $297 million in net income to stockholders, but $222 million of this was for AFUDC. Thus, 75 percent of net income did not represent cash (compared to an industrywide 1979 average of 38 percent) (13). To improve CWE'S cash flow (as well as that of 1P), the Illinois Commerce Commission (ICC) has allowed some portion of construction work in progress (CWIP) to be included in the rate base. At the end of 1980, CWE had a balance of $4.14 billion in their CWIP account, while IP had $920 million (24).

Planning under these conditions leaves relatively few options for the utility and the State regulators. ICC has initiated investigations into electric load forecasting and reserve margin/reliability issues, but the only feasible option is delaying part of the CWE construction program. With this option, the tradeoff is between extra

fuel savings and avoided escalation of costs from completing construction, versus delayed fixed charges by postponing it. The relative value of these factors depends on the projected growth rate in kWh sales. Lower sales growth means smaller fuel savings and a decreased value of completing construction. In its study of delaying two of CWE'S nuclear units, the ICC staff found that even with zero growth in kWh sales, it was better to complete construction without delay (65).

In contrast to the California regulatory system, ICC has not developed an independent forecasting capability. Instead it has channeled its administrative resources into financial analysis and production cost modeling to allow independent regulatory assessment of the costs and benefits of construction delays (albeit with many engineering assumptions determined by utility data). The production cost modeling will provide a basis for establishing purchased power rates as required by PURPA section 210. By contrast, the California agencies have devoted relatively few resources to financial and production cost modeling, but instead have concentrated *on* demand forecasting (35).

Given the lack of flexibility in any of the construction commitments of CWE and 1P, ICC has chosen to avoid conflict over future demand growth expectations. The sensitivity of ICC to the financial strains of the utilities makes it unlikely that any effort will be directed toward demand reduction policies (35). The more relevant question in this jurisdiction is the extent to which ICC can shelter the utilities from the damaging financial impacts of competition either from conservation measures or from cogeneration and small power production.

ICC established purchase power rates for QFs based on a time-of-day rate structure that reflects avoided costs both on-peak and off-peak as well as seasonal adjustments. These rates vary depending on the utility's fuel mix. Thus CWE—which is roughly 40 percent coal, 30 percent oil, and 30 percent nuclear—offers energy payments on-peak that are only slightly lower than those offered by PG&E (see table 19). However, the other major Illinois utilities, which have 85 to 98 percent coal-fired capacity, have much lower avoided costs. None of the Illinois utilities is offering capacity payments to QFs, due to the current excess capacity situation in that State (39).

The future avoided cost path for CWE depends critically on the growth rate of kwh sales. High growth will require continued reliance on oil and gas for a significant fraction of annual energy requirements, but at an average annual rate of 2 percent or less the primary avoidable fuel will be coal. Average avoided fuel cost estimates for CWE during 1981-88 are shown in figure 14 for growth rates of zero and 2 percent. Figure 14 illustrates a situation of declining avoided costs; other CWE calculations indicate a more conventional outcome, with increasing avoided costs over time (35). While the declining cost outcome is by no means certain to occur, it represents a risk to the

Figure 14.—CWE Average Avoided Cost Paths: Baseline Construction[a]

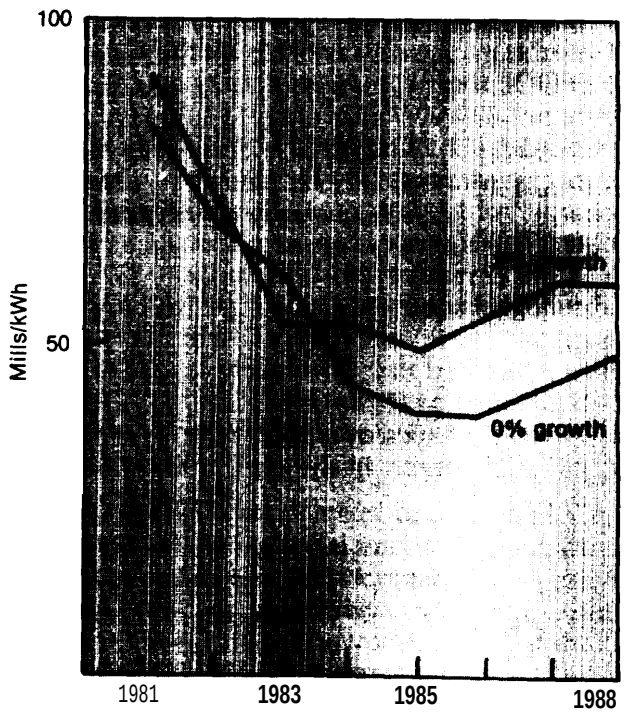

[a]Calculations based on data supplied to the ICC by CWE.

SOURCE: Edward Kahn and Michael Merritt, *Dispersed Electricity Generation: P/arm/rig and Regulation* (contractor report to OTA, February 1981).

potential investor in cogeneration if economic feasibility depends on sales of excess power to the utility.

New England.–Electric power planning in New England is dominated by the influence of the New England Power Pool (NEPOOL), a regional pool that fully integrates both operations and planning, and by the fragmented nature of the regional utility industry. Most New England utilities are small by national standards, and even the larger New England systems are associations of small companies. Under these conditions it would be impossible for any individual company to achieve the economies of scale offered by large baseload units without undue risk and extra cost. By cooperating in joint venture projects, however, the New England utilities are able to overcome the regional fragmentation and to capture economies of scale. From a regional perspective this has been a significant political achievement (35).

The New England utilities also can purchase capacity from NEPOOL for minimal cost due to the substantial excess capacity on the system (the NEPOOL reserve margin in 1979 was 38.6 percent or 5890 MW above the 15,278 MW winter peakload) (17). A NEPOOL member can meet his capacity responsibility by paying a "deficiency charge" of $22/kW annually to the pool. If the deficiency is above 2 percent, then an additional $14/kW is required for this capacity (57). Even allowing for some escalation in these charges, this is a much lower opportunity cost of capacity than that estimated for potentially capacity short regions such as California. PG&E, for example, is currently offering over $60/kW/yr for short-term capacity contracts in the early 1980's (54).

The principal problem facing NEPOOL and the New England utilities is reducing oil dependence in face of the deteriorating financial condition of, and increasing opposition to, the region's planned nuclear power projects. With the substantial generation reserves in NEPOOL, approval of new projects is more difficult politically. The extreme regulatory risk is that completed projects will not be entered into the rate base on the grounds that they are unnecessary. Such a ruling has recently been made in Missouri (43). Given the relatively large number of jurisdictions in New England, the requirements for political consensus on large-scale projects is severe. Barring such consensus, the economy of scale capacity expansion strategy will fail (35).

Within this planning context, the New England States have adopted a variety of means of implementing PURPA, including two statewide approaches (New Hampshire and Vermont), and one based on the cost differences between a generating utility and its nongenerating subsidiaries (Massachusetts). Although most State regulatory commissions have adopted standard purchase power rates based on each individual utility's capacity mix and operating characteristics, nothing in PURPA precludes statewide or even regional rates if they are appropriate and they further PURPA'S goals of encouraging cogeneration and small power production and promoting the efficient use of utility facilities and resources. Statewide or regional rates may be perceived as advantageous when, as in New England, the operations of utilities are closely integrated so that they effectively form a single power system. In this case, a rate that reflects the avoided costs of the system rather than of individual utilities may provide a better signal of the value of QF power throughout the State or region (38,75).

The New Hampshire PUC established a statewide rate for utility purchases of QF power that uses, as a substitute for individual utility's avoided costs, the operating and maintenance costs of "the most recently constructed and most efficient oil generating station" (Newington) of the State's largest utility (Public Service of New Hampshire) (38). Newington's running costs were deemed to be a "reasonable proxy" for statewide full avoided costs because the other utilities in New Hampshire also rely primarily on oil for electricity generation from units with operating costs at least as high as Newington's.

The New Hampshire purchase rate can be raised to reflect the avoided costs of less efficient units when the load exceeds Newington's capacity or when Newington is not operating. However, the rate cannot be lower. That is, the PUC established a lifetime guaranteed minimum (or

"floor") rate for all QFs that begin operation prior to the completion of Seabrook I (a large nuclear unit). The guaranteed minimum encourages oil-displacing QFs to come on-line as soon as possible rather than waiting to see how avoided costs will be affected by the completion of Seabrook, and provides assurance that QFs will have a steady income stream despite the volatility in oil prices. If avoided costs do drop after Seabrook I is completed, QFs that come on-line before then will be subsidized through the guaranteed minimum, but such subsidies are authorized under the New Hampshire Limited Electrical Energy Producers Act, the State's "mini -PURPA." Thus, the primary question surrounding the guaranteed minimum rate is whether future PUCS will be bound by the decision of the present PUC or will discontinue the guarantee (38).

The Vermont Public Service Board based their statewide purchase rate on the estimated avoided costs of NEPOOL, as determined by the average of the actual operating costs of three of the region's most efficient oil-fired baseload plants. The result was similar to that achieved in New Hampshire (see table 19). The Vermont rates will ensure that QFs are not paid more than the cost of oil-fired units in operation at any time, and will enable the State's utilities to readily market QF power either through NEPOOL or elsewhere. The rates are subject to annual revision, but cannot be decreased by more than 10 percent in any year without a strong factual showing that a greater reduction is justified (38). This procedure does not provide as much protection against changes in avoided costs as the New Hampshire guaranteed minimum, but it does limit the rate of decrease if NEPOOL'S avoided costs drop suddenly (e.g., if a new, more efficient baseload plant comes on-line) and it conforms to the traditional ratemaking practice of not subjecting consumers to sudden, drastic changes in rates. As in New Hampshire, the Vermont rate guarantee could result in some subsidization of QFs, but probably will average out over time and thus be within the limits on such subsidies anticipated in the FERC regulations.

A third approach was necessary in Massachusetts to accommodate "all-requirements" contracts among the corporate members of the New England Electric System, a public utility holding company whose subsidiaries include a wholesale generation and transmission company (New England Power) and two retail distribution companies that have "all-requirements" contracts with New England Power (a third distribution sub sidiary purchases at least 75 percent of its electricity needs from New England Power). Under the FERC rules implementing PURPA, avoided cost calculations are supposed to be based on the supplying utility's costs if the power is actually wheeled, and otherwise on the nongenerating utility's cost of purchased power. The Massachusetts Department of Public Utilities (DPU) petitioned FERC for avoided cost rates based on the supplying utility's costs, when the two utilities are corporate affiliates, regardless of whether the power actually is wheeled. DPU argued that such rates would reflect "the true avoided costs of producing that power by the appropriate utility system," rather than an intracorporate transfer price that might be kept artificially low (38). Although FERC has not issued a decision on the DPU petition, this approach does not seem to be precluded by the FERC rules so long as it encourages QF generation. However, if this approach required DPU to look at the reasonableness of the wholesale rates between two corporate affiliates, it could infringe on Federal jurisdiction over such rates under the Federal Power Act (38).

The basis for setting purchase power rates in New England is likely to be tied to oil costs for at least the next 10 years. There is, however, more than one way to reflect oil dependence in PURPA rates. The New Hampshire decision, for example, is based on projected rather than actual oil costs. Presumably such a procedure is intended to correct the accounting lags that occur when actual costs are used and prices are rising rapidly. The California rates discussed above achieve a similar result by indexing rates to the average oil cost in the previous quarter (8,1 O). The California approach will match rates more closely with avoided costs and eliminate the uncertainty of projecting oil prices, but also will result in lower payments.

Given the current excess capacity in New England, any capacity payments made to cogenerators will be limited by NEPOOL deficiency

charges. For example, the New Hampshire and Connecticut capacity payments of 5 mills/kWh (the difference between the payments for firm and nonfirm power) correspond roughly to the NEPOOL deficiency charge of $22/kW, where this capacity would be required 4,400 hr/yr ($22/kW / 4,400 hrs = 0.5 cents/kWh) (34).

The introduction of QF power into NEPOOL interchanges raises the question of whether NEPOOL billing procedures might reimburse the Vermont utilities on a basis other than full avoided cost. NEPOOL has a complex "split-the-savings" formula that allocates 50 percent of the saving to cover NEPOOL overhead and apportions the remaining 50 percent among utilities based on their volume of business with NEPOOL over a certain period. Due to the relatively low volume of business Vermont utilities do with NEPOOL and the large difference between the utilities' incremental cost and NEPOOL'S decremental cost, in most cases Vermont utilities will not receive the full NEPOOL avoided cost for QF power they supply to the pool. If the utilities must pay QFs the full NEPOOL avoided cost, but recover less than that from the pool, the utilities must either absorb the difference as a loss or pass it on to their ratepayers. The most obvious solution is for NEPOOL to recognize QFs as "sources of power" to utilities under the pool agreement. This is the approach adopted by New England Power in several recent contractual arrangements which identify dispatchability as the main operative distinction: a purchased power resource that can be dispatched by the utility or NEPOOL is a generation resource. Anything else is a negative load (38).

Alternatively, NEPOOL could change its billing practices to accommodate full avoided cost rates by treating QF power as its marginal power rather than mixing it in with other power furnished by a utility. In this case, NEPOOL would, in effect, directly purchase QF power at its full avoided cost and the utility would merely serve as a conduit. Thus, this approach is similar to the FERC provisions for wheeling power through a local utility to a more distant utility.

FUTURE AVOIDED COST PATHS

Given the wide regional variation in the economic and regulatory environment of electric utilities, uniform implementation of PURPA section 210 pricing incentives is unlikely. The pattern of avoided costs over time will depend on existing regional fuel mix and reserve margin, as well as on regulatory policy toward rates and capacity expansion. Figure 15 illustrates several generic paths for average utility avoided costs. A given company will start off on the left-hand side of this figure with its fuel base dominated by oil, coal, or nuclear steam generation. As current construction is completed and fuel costs continue to increase, the fuel base and its value will change. The basis of PURPA payments, avoided costs, also depends on future demand growth. To the extent that supply and demand are out of equilibrium, there will be cost implications for cogenerators and small power producers. One possibility of this kind is the potential for perma-

Figure 15.–Generic Paths for Average Avoided Costs (mills/kWh)

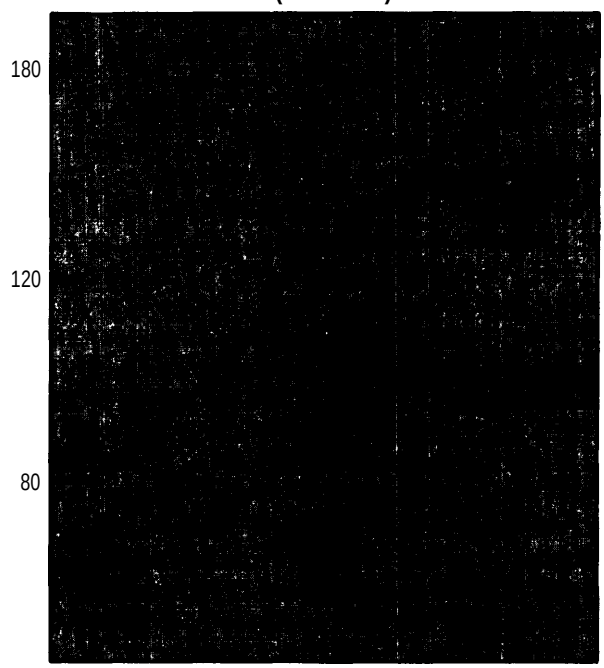

SOURCE: Edward Kahn and Michael Merritt, *Dispersed Electricity Generation: Planning and Regulation* (contractor report to OTA, February 1981).

nent excess capacity; e.g., if State regulators authorize construction of central station plants to displace oil. Resulting reserve margins maybe so great as to preclude PURPA payments for capacity. To examine the potential variety of outcomes, it is-helpful to trace out various pathways through figure 15.

Starting at the upper left with the shortrun marginal cost (SRMC) of oil, several developments are possible. At some point, this shortrun marginal cost curve will intersect the longrun marginal cost (LRMC) curve. If the utility must continue to displace large amounts of oil at this point, the avoided cost will continue to increase at the oil price escalation rate. Two other alternatives are possible. The utility fuel mix may be in equilibrium when SRMC (oil) = LRMC. In this case avoided cost becomes longrun marginal cost, which is likely to rise much more slowly than oil prices. The third alternative is permanent excess capacity. This could occur in any number of ways; all that is required is for construction commitments to exceed long-term demand. In this scenario avoided costs level out over time and converge ultimately to the shortrun marginal cost of coal or nuclear plants (35).

Starting out from a fuel base of excess coal or nuclear capacity, a utility's average avoided costs also will eventually reach equilibrium with longrun marginal cost. This may not occur very smoothly, as figure 15 indicates. At some time excess capacity will be exhausted and new facilities will be necessary. At this point the avoided cost will take a major step upward. Addition of new facilities in such circumstances would pose the practical problem of allocating the longrun marginal cost to capacity and energy for the purpose of designing rate schedules for purchased power (35).

Regulation of Fuel Use

Cogenerators' fuel choice may be influenced by the FUA prohibitions on oil and gas use and by the allocation and pricing rules of NGPA, as well as by environmental requirements and tax incentives (see following sections).

The Fuel Use Act.-A cogenerator may be subject to the FUA prohibitions if it has a fuel heat input rate of 100 million Btu per hour (MMBtu/hr) or greater (or if the combination of units at any one site exceeds 250 MMBtu/hr), and if it comes within the statutory definition of either a powerplant or a major fuel-burning installation. Under FUA, a powerplant includes "any stationary electric generating unit, consisting of a boiler, a gas turbine, or a combined-cycle unit that produces electric power for purposes of sale or exchange," but does not include cogeneration facilities if less than half of the annual electric output is sold or exchanged for resale. A major fuel-burning installation is defined as "a stationary unit consisting of a boiler, gas turbine unit, combined-cycle unit or internal combustion engine." However, the prohibition against the use of oil and gas in new major fuel-burning installations applies only to boilers.

Cogenerators can seek any of four different exemptions from FUA. The one most likely to be used is the cogeneration exemption. If this does not apply, the permanent exemption for the use of a fuel mixture or the temporary exemptions for the future use of synthetic fuels or for public interest considerations may be available.

FUA allows a permanent exemption for cogenerators if the "economic and other benefits of cogeneration are unobtainable unless petroleum or natural gas, or both, are used in such facilities." The Department of Energy (DOE) interprets the phrase "economic and other benefits" to mean that the oil or gas to be consumed by the cogenerator will be less than that which would otherwise be consumed by conventional separate electric and thermal energy systems. Alternatively, if the cogenerator can show that the exemption would be in the public interest (e.g., a technically innovative facility, or one that would help to maintain employment in an urban area), DOE will not require a demonstration of oil/gas savings (72). The regulations to implement the cogeneration exemption are in the process of being revised in order to simplify the procedures for calculating oil and gas savings. Therefore, it is uncertain how difficult it will be to meet the exemption requirements, and thus how FUA will affect the market penetration of cogeneration (67).

Although the permanent exemption for cogeneration is likely to be the preferred route for

potential cogenerators subject to the FUA prohibitions, several other exemptions may be applicable in certain circumstances. First, a permanent exemption is available to petitioners who propose to use a mixture of natural gas or petroleum and an alternate fuel. Under this mixtures exemption, the amount of oil or gas to be used cannot exceed the minimum percentage of the total annual Btu heat input of the primary energy source needed to maintain operational reliability of the unit consistent with maintaining a reasonable level of fuel efficiency. Second, a temporary exemption is available to petitioners who plan to use a synthetic fuel (derived from coal or another fuel) by the end of the exemption period. Third, a temporary public interest exemption may be obtained when the petitioner is unable to comply with FUA immediately (but will be able to comply by the end of the exemption). One of the cases where this public interest exemption may be granted is for the use of oil or gas in an existing facility during the ongoing construction of an alternate fuel-fired unit (77).

NGPA grants an exemption from its incremental pricing provisions to qualifying cogeneration facilities under section 201 of PURPA. However, a similar exemption also is available to small industrial boilers and to utilities. Thus, the potentially lower gas prices should not affect the relative competitiveness of gas-fired cogeneration significantly. Moreover, plants burning intrastate gas may not realize any savings because the fuel price is often at the same level as the incremental price. In addition, deregulation could largely remove incremental pricing. These uncertainties mean that NGPA probably will not be a major factor in cogeneration investment decisions (58).

Environmental Regulation

Federal, State, and local requirements for environmental and safety regulation will affect cogeneration, although not to the same degree as they do central station powerplants. The principal effects will result from permitting requirements and from the multiple jurisdictional responsibility for such permitting, which could increase the cost and leadtimes for deployment of cogenerators and impose additional burdens on State agencies.

THE CLEAN AIR ACT

As discussed in chapter 6, cogeneration can have significant impacts on air quality, especially in urban areas. Depending on a cogenerator's size and location, it may be subject to one or more of the Clean Air Act provisions, including new source performance standards (NSPS) and programs for meeting and maintaining the National Ambient Air Quality Standards (NAAQS) in nonattainment and prevention of significant deterioration (PSD) areas.

At present, NSPS exist for two types of sources that might be used for cogeneration, and have been proposed for a third. NSPS have been implemented for electric utility steam units of greater than 250-MMBtu/hr heat input. However, cogeneration facilities in this category are exempt from NSPS if they sell annually less than either 25 MW or one-third of their potential capacity. The other promulgated NSPS is for gas turbines of greater than 10 MMBtu/hr heat input at peakloads, but units in the 10-to 100-MMBtu/hr range are exempt until October 1982 and, in addition, have higher allowable nitrogen oxide (NO_x) emission limits than units above 100 MM Btu/hr. NSPS have been proposed for NO_x emissions from both gasoline and diesel stationary engines. As proposed, they would apply to all diesel engines with greater than 560 cubic inch displacement per cylinder. Finally, the Environmental Protection Agency is considering an NSPS for small fossil fuel boilers. The agency is reportedly considering lower limits in the range of 50 to 100 MMBtu/hr heat input. However, regulations have not yet been proposed. Thus, only the NSPS for gas turbines and the proposed standards for stationary internal combustion engines seem likely to affect cogeneration systems, and then only if they are larger than the prescribed limits.

PSD regulations would apply to fossil fuel boilers of greater than 250-MMBtu/hr heat input that emit more than 100 tons per year (tpy) of any pollutant, and also to any stationary source that emits more than 250 tpy of any pollutant (assuming that controls are in place). A PSD permit is only issued following a review of project plans, and an assessment of project impacts on air quality based on modeling data and up to 1

year of monitoring. These modeling and monitoring requirements can be expensive. For instance, one estimate suggests that the requisite modeling and other PSD requirements add from $35,000 to $80,000 to the installation costs of a 3-MW diesel cogenerator in New York City (1 2).

The application of the nonattainment area requirements to cogenerators also depends on system size; here the trigger is the capability of emitting 100 tpy of a pollutant. Sources with higher emissions must meet the lowest achievable emission rate (LAER), secure emissions offsets, and demonstrate companywide compliance with the Clean Air Act. Smaller sources must use reasonably available control technology and are subject to the general requirement for "reasonable further progress" toward the NAAQS in nonattainment regions.

OTHER FEDERAL REQUIREMENTS

In addition to the potentially extensive permitting requirements for cogenerators under the Clean Air Act, facilities with any cooling water discharges may also need National Pollutant Discharge Elimination System (NPDES) permits under the Clean Water Act. The NPDES permit generally specifies the applicable technological controls or effluent limitations required to achieve the water quality standards for the receiving waters. These permits are only likely to be required for large industrial cogenerators.

Because the only major Federal permit or authorization requirements for cogenerators are those under the Clean Air and Water Acts, they are not likely to be subject to the NEPA process or to the other environmental requirements applicable to central station powerplants. However, operating cogeneration facilities can come under the purview of OSHA, especially with regard to noise standards and the general OSHA recordkeeping requirements. Any restrictions imposed should not be sufficiently burdensome to discourage the deployment of cogenerators.

STATE REGULATION*

State governments are required to implement the Federal permit processes under the Clean Air and Water Acts. States may or may not have other environmental or safety regulations beyond those mandated by Federal law, and State implementation of the Federal requirements may vary widely, depending on their orientation toward regulation as well as on the regional environmental quality. A survey of all State requirements for environmental and safety regulation of cogenerators is beyond the scope of this report. However, some general trends are noted below with a specific comparison of a State with more rigorous requirements (California) and one that has few requirements beyond those mandated by Federal law (Colorado).

Colorado.–The permitting process in Colorado closely tracks the requirements of Federal laws (described in the previous section). One Colorado environmental law deserving some explicit attention is the Colorado Air Quality Control Act (CAQCA), which deviates from the Federal requirements in three ways. First, CAQCA requires essentially all new or modified sources to file an Air Pollution Emission Notice (APEN). Second, all new or modified sources must apply for an emission permit which is required for both nonattainment and PSD areas, and which applies to virtually all fossil fuel facilities except small stationary internal combustion engines and gas burners with less than 750,000-Btu/hr heat input. Third, CAQCA'S significance levels for nonattainment areas are considerably lower than those specified under the Federal program (e.g., 10 tpy of particulate or sulfur dioxide ($S0_2$) rather than the 40 tpy under Federal regulations). Otherwise, the permitting procedures under the Colorado Act are essentially the same as those under the Federal requirements.

The length and complexity of the permitting process for cogeneration in Colorado will depend on the choice of site. Important site-specific factors may include whether Federal or State lands are involved, impacts on surface waters, and ambient air quality levels. Permitting agencies should be contacted simultaneously in order to reduce the time required for licensing and decrease the amount of paperwork.

For this assessment, the Colorado permitting process was applied to two hypothetical cogeneration facilities: a large cogeneration unit consisting of a new coal-fired boiler of 200-MMBtu/hr

*Except where noted otherwise, the discussion in this section is drawn from Energy and Resource Consultants, Inc. (22).

heat input, with steam turbine topping capability, located in an urban area and not selling any excess electricity to the grid; and a small cogeneration unit, represented by a commercial firm's retrofitting a 15-MMBtu/hr diesel engine to supply a maximum of 2-MW electrical output with excess power available to the grid during times of peak demand.

Large Cogeneration Project-Air Permits: Much of the front range area in Colorado is nonattainment for particulate; however, with only minimal control, the 200-MMBtu/hr boiler will not emit over 100 tpy of particulate and thus would not be subject to the strict nonattainment area requirements. Because the entire State is in attainment for $S0_2$ the plant would require a PSD permit only if it emits more than 250 tpy. Assuming a 70 percent load factor and the use of coal with a 1 percent sulfur content, the uncontrolled $S0_2$ emissions could approach 1,000 tpy, which would not meet the $S0_2$ emission rate of less than 1.2 lb/MMBtu for an emission permit under the new fuel burning equipment regulations. Thus, the sponsors for this hypothetical project must choose between achieving a 75-percent reduction in SO_2 emissions or going through the PSD permit process. Note that under the bubble concept for PSD, the source may have some emission credits from the existing boiler.

Large Cogeneration Project– Water Permits: If the boiler's cooling system were to result in discharge to surface waters, a waste discharge permit would be required, as part of the State implementation of the NPDES program. Although existing sources can negotiate a compliance schedule for achieving discharge limits, new sources must meet those limits from the start.

Small Cogeneration Facility: The small cogenerator will have to file an APEN and apply for an emission permit. A 15-MMBtu/hr diesel unit does not qualify as a major source under either the PSD or new source review programs for particulate or $S0_2$, and at present no NO_x standard has been promulgated for diesels. However, it will be subject to the (as yet undefined) minor source requirements for particulate because it is located in a nonattainment area.

There is little experience with which to judge the impacts of the Colorado permitting process on cogeneration facilities. There are only three cogeneration units in the State, and none is interconnected with the utility grid. Colorado has no special laws, procedures, or exemptions that might suggest a State "policy" toward dispersed generating technologies. Rather the existing regulations derive principally from Federal mandates, which (except for PURPA and the cogeneration exemption under FUA) make no special recognition of dispersed facilities. Thus, the regulatory obstacles to dispersed facilities in Colorado are not severe. Most of the required permits and approvals can be secured in less than 6 months and at modest expense, and, furthermore, have cost and time requirements commensurate with the project size. The only regulatory obstacles would likely be the nonattainment area and PSD requirements for large cogeneration units, and the time the developers will have to spend determining what permits will be necessary for their facilities. At present, there is no central clearinghouse dispensing information on the permitting process.

California.– Regulation of cogeneration in California is complex, but highly organized. The increased complexity arises in two ways: first, due to the large number of agencies and commissions with regulatory responsibility in California; and second, due to the regionalism of major regulatory programs, notably air, water, and coastal zones. For example, the California Air Resources Board (CARB) administers the Clean Air Act in California. Yet 46 local and regional air pollution control districts (APCDS) are responsible for controlling pollution from stationary sources through permitting, enforcement, and the adoption of control standards (often more stringent than those required by CARB). Similarly, although the State Water Resources Control Board administers the Clean Water Act in California, most decisions regarding permits and enforcement are made by nine regional boards and their staffs.

The high degree of organization of the permitting process in California stems from the role played by the Office of Permit Assistance (located

in the Governor's Office of Planning and Research), which helps project sponsors identify and meet regulatory requirements. The office screens permit applications and acts as an intermediary between projects and agencies. Another unit with the Office of Planning and Research, the State Clearing House, attempts to coordinate the preparation of, and comments upon, environmental statements—either environmental impact reports under the California Environmental Quality Act (CEQA), or joint statements under CEQA and NEPA.

The permitting process in California centers around the requirement for an environmental impact report (EIR) under CEQA. If the lead agency decides that an EIR is required, one is prepared by that agency in consultation with all other permitting agencies, who must propose definite measures to mitigate any significant impacts identified in the EIR. The entire process is subject to a schedule, defined by statute, such that all decisions on a project must be complete within 18 months of the date the initial application was accepted by the lead agency.

The permitting process in California was analyzed for the same hypothetical large and small cogeneration facilities as discussed for Colorado, above.

Large Cogeneration Project–Air Permits: Every source of air pollution in California requires a two-stage permit. The first stage is an authority to construct based on a review of project plans, and the second stage, following construction, is a permit to operate based on a performance test. The authority to construct and permit to operate require compliance with the emission limitations set by the local APCD. New source review rules also will apply if the source triggers any nonattainment area requirements. Although the basic nonattainment area rules (such as LAER, emission offsets, and companywide compliance) apply across all APCDS, each APCD determines the trigger levels, in terms of pounds of emissions per day, for nonattainment areas. Although conceptually straightforward, the regulations generated by 46 APCDS for several classes of sources and half a dozen individual pollutants are voluminous.

Most APCD trigger levels for new source review in nonattainment areas are more stringent than the Federal requirements. Much of California is in attainment for $S0_2$, but the industrial areas are generally nonattainment for TSP and NO_x. Assuming that the 200-MMBtu/hr coal boiler has NO_x emissions of 0.7 lb/MMBtu, it would emit 140 lb/hr of NO_x, thus triggering the LAER requirement. In addition, an EIR under CEQA may be required. In any event, a final decision by the APCD whether to issue an authority to construct must be made within 1 year.

Large Cogeneration Project–Water Permits: California's waste discharge requirement program predates the Clean Water Act but encompasses the same sources as the NPDES and section 401 programs. For a point source discharge to surface waters, the State waste discharge requirement serves as an NPDES permit. Similarly, requests for a section 401 Water Quality Certificate will result in either a waste discharge requirement if the proposed project would affect water quality, or a letter to the effect that no certificate is required because no impacts are anticipated. All permitting is done by the regional boards in accordance with general standards and criteria developed in their water pollution control plans and, in the case of sources subject to NPDES, using the various Federal technological standards. The waste discharge requirement applies to all point source discharges and additionally to any discharges onto land or to a private pond, and would thus be required for most large cogeneration projects.

Srnall *Cogeneration Facility:* in addition to an authority to construct, the small cogenerator may need to meet nonattainment area requirements for NO_x. A 15-MMBtu/hr heat input cogenerator with emissions of 3.5 lb/MMBtu would result in over so lb/hr of NO_x emitted. These would be offset (under the bubble concept) by the emission level of the diesel engine before the retrofit (if any); so the net increase mayor may not exceed the applicable trigger level.

The differences between environmental regulation in California and Colorado primarily result from the environmental review process mandated by CEQA, and California's aggressive but

helpful approach to regulating energy development. The guidelines under CEQA and NEPA for conducting environmental review are quite similar; in fact, many projects will prepare statements acceptable under both guidelines even if CEQA alone is thought to apply. However, the impact of CEQA in California, as compared to NEPA in Colorado, is greater because the environmental review process can be triggered by State, county, and municipal actions, whereas NEPA is triggered only by Federal action. Thus, many more projects may need to prepare environmental reviews in California than in Colorado. This puts more projects into the public arena, but should not result in delays so long as the statutory schedules for permitting are followed.

On the other hand, there are several initiatives in California that encourage cogeneration and may help shorten part of the permitting process. First, new State legislation makes it easier for 50 MW or smaller cogenerators to obtain air quality permits. Under this legislation, cogenerators will receive an emissions credit equal to the emissions that would have come from a powerplant generating the same amount of electricity. In addition, the statute requires CARB and the APCDS to develop a procedure to determine the availability and magnitude of the offsets which result when cogeneration facilities displace powerplants. Thus, in effect, the statute shifts the burden of acquiring nonattainment area offsets from the potential cogenerator to the APCD (1 1).

As a further aid to cogeneration, two special administrative offices have been established to assist prospective cogenerators with regulatory requirements: the Cogeneration Desk of the Office of Permit Assistance, and the Project Evaluation Branch of the Stationary Source Control Division in CARB. Both of these offices are designed to provide assistance in obtaining permits and meeting air quality requirements. Moreover, the Governor's Task Force on Cogeneration (which includes directors from CARB, the Office of Planning and Research, the California Energy Commission, and the public Utilities Commission) is actively seeking ways to encourage cogeneration in the State. Each of these agencies has special personnel available to assist potential cogenerators with all aspects of their project, including legal and technological problems. The experiences of recent California cogeneration projects suggest that environmental and other regulatory requirements are not a major obstacle, especially for smaller facilities. However, potential cogenerators may perceive the permitting process to be onerous, and the principal task for State agencies is likely to be convincing potential cogenerators that the regulatory requirements are not insurmountable.

Financing and Ownership

The basic aspects of financing electric utility capacity additions (reviewed in the previous section) are applicable to cogenerators. A number of other elements special to cogeneration are discussed below, including the tax and financing aspects of cogeneration and considerations related to the different ownership categories: private investors, IOUS, tax-exempt entities, and rural electric cooperatives. *

General Considerations

General considerations related to financing and ownership of cogeneration technologies include the ownership and purchase and sale terms of PURPA (discussed above), the utility financing provisions of the National Energy Conservation Policy Act (NECPA) of 1978 (as amended by the Energy Security Act of 1980), tax incentives of the National Energy Act, the Windfall Profits Tax Act, and the Economic Recovery Tax Act, aspects of project financing and lease relationships, and capital recovery factors.

The most important sections of the Energy Security Act for the purposes of this assessment are contained in title IV—Renewable Energy initiatives, and title V—Solar Energy and Energy Conservation. Title IV establishes incentives for the use of renewable energy resources including wind, solar, ocean, organic wastes, and hydropower; only those provisions related to the use of organic wastes as fuel are applicable to cogenerators. Funding of $10 million in fiscal year 1981 was established to promote renewable energy re-

*Except where noted otherwise, the analysis in this section is from L. W. Bergman & Co. (37).

sources under a 3-year pilot energy efficiency program.

Title V set up a Solar Energy and Energy Conservation Bank in the Department of Housing and Urban Development to make payments to financial institutions in order to reduce either the principal or interest obligations of owners' or tenants' loans for energy conserving improvements to residential, multifamily, agricultural, and commercial buildings. For commercial buildings, the eligible improvements specifically include cogeneration equipment. Direct grants to owners and tenants of residential or multifamily buildings also were authorized but were limited to lower income people. No investment tax credits (only energy credits) were allowed for any projects installed under loans from the Solar Bank, and expenditures were to have been made after January 1, 1980. The bank was intended to continue operations through September 30, 1987, but the fiscal year 1981 budget eliminated all funding for the Bank and its future is, at best, highly uncertain.

The Energy Security Act also amended NECPA to permit utilities to supply, install, and finance conservation improvements or alternate energy systems (including cogenerators) as long as independent contractors and local financial institutions are used and no unfair competitive practices are undertaken by the utility. Utilities are eligible to qualify as lenders and receive subsidies to pass on to customers. Local governments and certain nonprofit organizations are eligible borrowers.

In addition to the regular investment tax credit of 10 percent on most capital investments, several energy incentives have been passed in recent years. Under section 48(1) of the Internal Revenue Code a number of "energy properties" are defined and set aside for special treatment under the investment tax credit (see section on "Taxation, " above). Property is not eligible for these special incentives to the extent that it uses subsidized energy financing (including industrial development bonds), or is used by a tax-exempt organization or governmental unit other than a cooperative. public utility property (that for which the rate of return is fixed by regulation) is excluded from these energy incentives even if it utilizes solar, wind, biomass, or other alternative sources of energy such as synthetic liquid or gaseous fuels derived from coal.

The methods of project finance are particularly appropriate to the financing of distributed electricity generation. project financing looks to the cash flow associated with the project as a source of funds with which to repay the loan, and to the assets of the project as collateral. For successful project financing, a project should be structured with as little recourse as possible to the sponsor, yet with sufficient credit support (through guarantees or undertakings of the sponsor or third party) to satisfy lenders. In addition, a market for the energy output (electrical or thermal) must be assured (preferably through contractual agreements), the property financed must be valuable as collateral, the project must be insured, and all Government approvals must be available (47). With the adoption of PURPA, a source of revenues (rates for power purchases) has become available for small-scale energy project finance.

However, the uncertainty surrounding future rates for power purchases (due to the 1982 Court of Appeals decision discussed previously and the pending Supreme Court review of that decision) has chilled the interest of potential financial backers of cogeneration and small power projects. The revenue stream from utility purchases of cogenerated power is used to secure the project financing. Because the future level of that revenue stream is in doubt, bankers and other investors are reluctant to commit funds until the issue is resolved.

Leasing is a form of project finance because fixed payments are used to amortize capital equipment. Two types of lessors may be involved in project financing: sponsors of a project who lease to the project company, and third-patty leasing companies that are in the finance business. The third-party lessors may have more attractive rates because they utilize the tax benefits of owning the equipment.

The Economic Recovery Tax Act of 1981 substantially changed the tax treatment of leasing to make it very attractive for projects like

98-946 0 - 83 - 8: QL 3

cogeneration. If a cogenerator is unable to take advantage of tax credits (e.g., already has a low tax liability), the tax advantages can be transferred to another party under the safe harbor leasing provisions of ERTA. In essence, these provisions allow the property to be sold for tax purposes only to a corporation in a higher tax bracket. The corporation would give the cogenerator a cash payment (e.g., 25 percent of the property's value) and a note for the remainder of the purchase price, and then lease the equipment back to the cogenerator. Payments due under the note would be matched exactly by the lease payments. Thus, no money actually changes hands after the initial cash payment, and with the exception of the tax difference between lease payments (which are expensed in full) and income from the note (which reflects only its interest component), the transaction is extremely advantageous to both parties (33).

The capital recovery factor, as used in this section, is the cost per kilowatthour which the owner of a cogenerator must receive to recover its capital in a given period of time. Table 20 compares capital recovery factors for four classes of ownership that reflect different income tax structures: a nonutility investor with a 50-percent marginal tax rate; a utility with a 50-percent marginal tax rate; a utility with a 10-percent marginal tax rate that is unable to take advantage of investment tax credits because it already has an excess of such credits; and a nontax-paying entity. In all cases the capital recovery factors are greatest for utilities in the high tax brackets and lowest for nontaxable entities.

One way for an investor to get around high capital recovery factors is to use long-term bond financing. With high leverage, the equity investor is able to recover his investment in a shorter period of time because the bond holder is willing to wait to recover his capital. However, high leverage increases the risk to the equity investor and therefore also increases the required return on equity. Thus, depending on the terms of debt and equity markets, debt financing can make these investments more attractive. It is also important to note that utilities are more comfortable with longer capital payback periods than nonutility equity investors, and that nonprofit entities have a different set of criteria for evaluating investments.

Industrial, Commercial, and Private investor Ownership

Industrial, commercial, vendor, and private ownership share (for the most part) a common tax status and will be discussed together. As noted previously, energy tax credits, coupled with regular investment tax incentives and the PURPA benefits, encourage private firms to enter small power production. The ability to obtain up to 25-percent investment tax credits offers an enormous boost to cash flow early in the project's life. These tax credits can be further magnified, in relation to invested equity, by debt leverage by a factor of 4. PURPA provides a guaranteed market for the power output and it encourages the development of contractual relationships between cogenerators and utilities. In project finance, such contracts are preferable to operating under a tariff structure because contractual relationships are less subject to arbitrary cancellation or alteration of the terms of delivery.

While the incremental investment tax credit for cogeneration is limited (particularly if the cogenerator uses oil or gas), industrial companies have

Table 20.—Capltal Recovery Factors for Cogeneration[a]
(cents per year per kllowatthour, In 1980 cents)

	Nonutility investor	High tax rate utility	Low tax rate utility	Nontax paying utility
5 year	3.6cents	4.2cents	3.Ocents	2.8cents
10 year	1.6	1.9	1.5	
15 year	1.1	1.2	0.99	0.93
20 year	0.77	0.91	0.74	0.70

[a]1980 capital cost $700/kw; usage 5,000 hrs/yr; depreciation lifetime 20 years.

SOURCE: L. W. Bergman &Co., *Financing and Ownership of Dispersed E/ectriclty Generating Technologies* (contractor report to the Office of Technology Assessment, February 19S1).

some experience with cogeneration and now have the added advantage of PURPA'S purchase and sale requirements. Continued Federal and State Government support of simultaneous purchase and sale at full avoided costs is viewed by some as the single most important factor in overcoming industry indecision to cogenerate (27).

Existing and potential industrial cogeneration participants include industrial parks, integrated pulp and papermills, other process industries (e.g., chemicals, petroleum refining, steel, food processing, textiles), and heavy oil recovery projects (see analysis of industrial cogeneration in ch. 6).

Financing options for industrial cogeneration may be quite varied depending on the size and financial strength of the industrial firm. These options include:

- retained earnings;
- debt issues (including bonds, bank loans, and private placements with insurance companies, pension funds, and similar institutions);
- equity issues;
- joint ventures with other industrial firms (see case 1) or with utilities;
- joint partnership with equity investors such as insurance companies (who may be both lenders and equity investors) and tax shelter syndicates (see case 2);
- leasing arrangements with third parties and vendors, including leveraged leases and safe harbor leases (under ERTA); and
- joint ventures and operating relationships with tax-exempt entities such as municipalities and public power companies. Tax-exempt parties can raise lower cost debt while transferring tax ownership and tax benefits to the private parties.

The incentive to commercial firms to invest in cogeneration will rest heavily on a comparison between the cost of cogenerated electricity (especially the fuel cost) and the price the commercial cogenerator pays for its electricity and heat (comparative basis). Because of their smaller size, commercial firms often do not have financial resources equivalent to those of industrial firms and will be less interested in large scale projects unless they can be cooperatively owned (50).

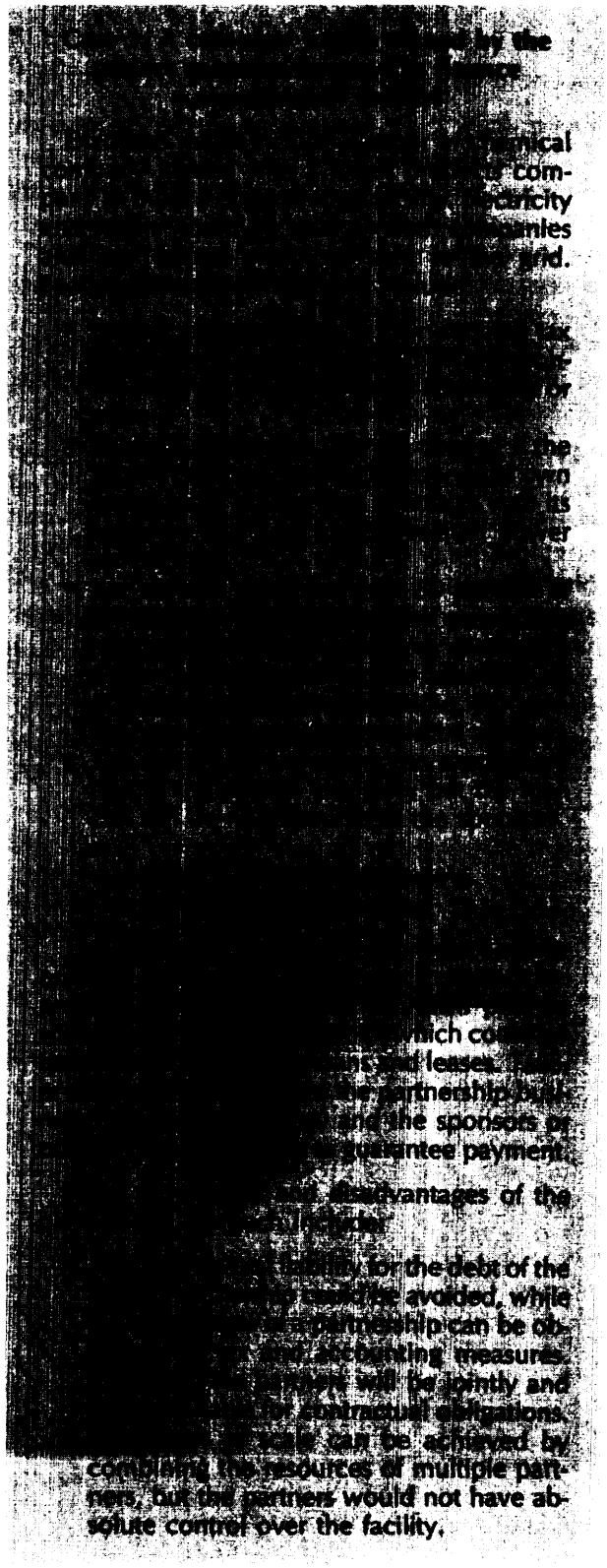

Sources of financing for commercial cogeneration would be similar to those for industrial cogeneration with the following qualifications:

- banks will be a more important source of funds than for industrial firms;
- there will be a greater dependence on outside developers and financial packages;
- joint venture funding will be very useful for regional malls, large buildings, and commercial parks; and
- vendors and third-party lessors will be quite important, particularly for diesel cogeneration (see case 3).

Private investors may be interested in cogeneration because of the unusual tax incentives available and the possibility of an above investment return in unusually promising situations. Joint venture relationships will be most advantageous to private investors, including tax shelter syndicates that provide the equity portion of a leveraged lease and shift tax ownership among the partners. Vendors might provide financing and traditional lease arrangements, particularly in the case of diesel cogenerators, or third parties could take advantage of ERTA's-safe harbor leasing provisions.

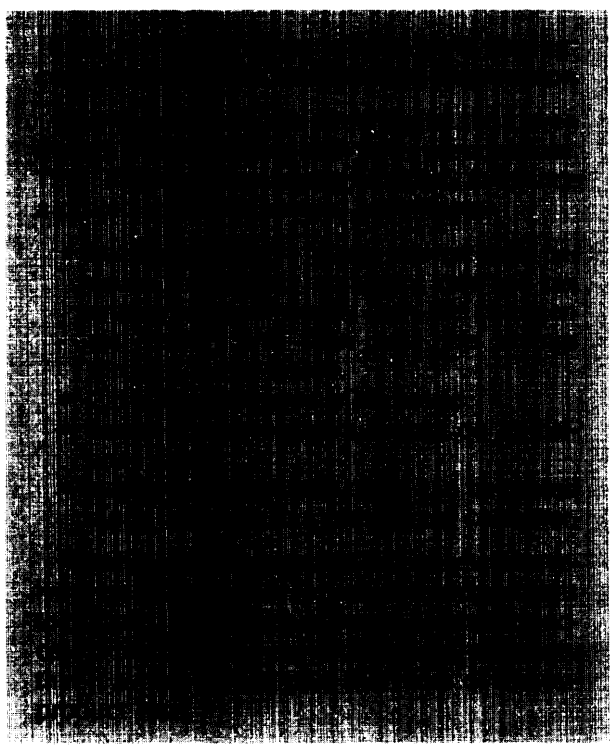

Where the owner (industrial, commercial, private investor) is a single entity and no outside joint ventures are involved, project financing via equity, secured or unsecured bank loans, debt, or lease arrangements is straightforvvard. Certain assurances or guarantees will be needed, however, in structuring the financing. These might include:

- contractual arrangements with a utility for electricity purchases under a take-or-pay contract;
- contractual arrangements with the thermal energy purchaser; or
- trustee relationships between the lender and revenue source with excess revenues over fixed charges remitted to the project owner.

Finally, some IOUS may also have financial assistance programs for industrial, commercial, and other private investors in cogeneration. For example, Southern California Gas Co. offers, funding assistance of up to $100,000 or 20 percent of the capital cost (excluding installation labor) for their cogenerating customers. Southern California Gas will co-fund upto$10,000 for the feasibility study (or 10 percent of the study's cost, whichever is less). If the feasibility study is positive, then the company will co-fund up to $40,000 (or 50 percent) of the cost of the design phase of the project, leaving $50,000 for installation and startup (62).

Investor-Owned Utility Ownership

Because almost all electric IOUS are in the business of generating electricity, they are logical potential owners of dispersed generation facilities. The small size, shorter leadtimes, and lower capital requirements of cogeneration systems may provide short-term advantages to utilities in planning for uncertain demand growth. However, the PURPA limitations on utility ownership discourage utility investment in cogeneration. Moreover, most large utilities do not see dispersed generating facilities—including cogeneration—as having the ability to replace future central generating stations, and the low-earned utility rates of return in recent years may not be high enough to en-

courage utility investment in technologies with uncertain electricity output.

Full (100 percent) utility ownership may be very advantageous if a utility faces revenue losses due to industrial or commercial cogeneration (see ch. 6). For instance, Arkansas Power & Light (AP&L) estimates that if their 35 industrial customers who are prime cogeneration candidates had cogenerated in 1981, AP&L's estimated revenue loss for that year would have been almost $40 million. However, if AP&L developed and owned the cogeneration systems for those 35 industrial customers, not only would they retain that industrial market for electricity, but they would have an additional revenue stream from steam sales—potentially $500 million in the mid-1980's (44). Moreover, if potential industrial or commercial cogenerators are unable to burn coal (e.g., due to space or environmental limitations), or are unwilling to assume the risk of advanced technologies (e.g., gasification), utility ownership with electricity and steam distribution can centralize the burden of using alternate fuels. However, the full incremental ITC is not available for utility-owned cogenerators nor are PURPA benefits available if an IOU owns more than 50 percent of the cogeneration facility. (The potential advantages and disadvantages of full utility ownership are discussed in detail in ch. 7.)

Alternatively, a utility may decide to participate in a joint venture for a cogeneration facility (see cases 4 and 5) in order to structure the ownership in such a way that the investment tax credit and other tax benefits are diverted to the nonutility participants. in addition, financing can be structured so that any debt related to the facility (with the exception of relatively small amounts for working capital) will not appear on the utility's balance sheet. This structuring would be appropriate for utility-financed industrial cogeneration or biomass projects.

Case 4: Joint venture between an industrial corporation and a utility to operate an industrial cogeneration plant.

In this case the industrial corporation owns the facility and leases it to the utility that operates the plant, provides the working capital, and integrates the facility into its entire system. The utility makes lease payments to the industrial owner in the form of cash and steam output but has no formal ownership in the plant. The contractual agreement of the utility to operate the plant is the key to the project. The industrial corporation receives the complete tax benefits. The utility (which may be in a weak financial position) can increase its available capacity without having to raise long-term capital. Such a scheme is particularly attractive to an IOU that is unable to issue additional long-term debt because of interest coverage covenants in their outstanding bond issues.

Case 5: Joint venture between an industrial company and utility with industrial company supplying 50 percent of funds.

This is an alternative financing for the same project discussed in case 4, but in which the industrial firm is only willing to provide 50 percent of the total capital. Because the utility is not entitled to the incremental energy investment tax credits, it arranges financing for the remaining 50 percent of the facility through a group of investors, who would then have 50 percent individual ownership in the facility. The utility has the same advantages as in case 4 of off-balance-sheet financing and increased capacity. The investors could be a tax shelter syndicate or a variety of other configurations.

Tax= Exempt Entities

The key advantage enjoyed by municipalities in issuing debt is the tax-free status of the interest paid on their obligations, which results in a lower interest rate than that paid on taxable securities. The current spread in yields between new AAA long-term IOU bonds and AAA municipal general obligation bonds is around 375 basis points (100 basis points equals 1 percentage point); between the same utility bonds and revenue bonds the spread is around 330 basis points.

Section 103 of the Internal Revenue Code sets out the provisions for a security to receive tax-exempt interest treatment. Section 103(a) exempts the interest on an obligation of a State or political subdivision (which would include general obligation bonds). Section 103(b), however,

denies tax-free status for industrial development bonds (IDBs) except for specific exemptions. In order for IDBs to qualify for tax-exemption, more than 25 percent of the proceeds of an obligation must be used by a nonexempt person for business purposes; a major portion of the principal or interest must be secured by business property; and, in the case of a take-or-pay contract with an electric facility, the contract must be with a nonexempt person and in exchange for payments totaling more than 25 percent of the total output debt service. Moreover, the facilities financed by tax-exempt IDBs must be for general public use and for specified activities including:

- solid waste disposal facilities for the local furnishing of electric energy;
- air or water pollution control facilities; and
- acquisition or development of land for industrial parks, including development for water, sewer, power, or transportation purposes.

Under the Windfall Profits Tax, solid waste-to-energy facilities are eligible for tax-exempt financing with IDBs if over half of the fuel is derived from solid waste, and the facility is owned by a governmental authority, although year-to-year management contracts with business corporations are allowed.

Perhaps the most important exemption for tax-free financing is the small issue exemption, under which up to $1 million in IDBs (or $10 million provided total capital expenditures do not exceed $10 million) can be issued for any trade or business for the acquisition of land or property subject to depreciation. However, if all of the proceeds of a bond issue are used to finance a project for which an Urban Development Action Grant (UDAG) has been made, then the capital expenditure can be $20 million, of which $10 million must come from sources other than tax-exempt obligations. Renewable energy property is eligible for a special exemption if the bonds used to finance it are general obligations.

Cogeneration is not eligible for special energy tax incentives if over 25-percent fueled from oil or gas. As the technology becomes available, coal-fired cogeneration plants will qualify for special tax incentives and be economically attractive. In the meantime, the best financing strategy for municipalities to foster cogeneration development using available technologies may be to maximize the use of tax-exempt financing (see case 6).

Industrial parks also are an excellent application in which municipalities can foster the development of cogeneration. Tax-exempt IDBs can be issued without limit under a specific exemption for the acquisition of land for industrial parks and its upgrading including water, sewage, drainage, communication, and power facilities prior to use. Cogeneration facilities (including steam distribution lines) presumably would fall into this specific exemption. The requirements encourage joint ventures between the exempt entity and businesses, but the funds must be used by the nonexempt entity in a trade or business and payments secured by an interest in property used in a trade or business. Moreover, some State laws prohibit municipalities from entering into corporate relationships with the private sector, but independent public bonding authorities usually can be established to get around such prohibitions.

Any number of lessor-lessee relationships also are possible between a municipality and a corporation. An important aim of the financing structure would be to allow the corporation to pick up the lo-percent investment tax credit (see case 7).

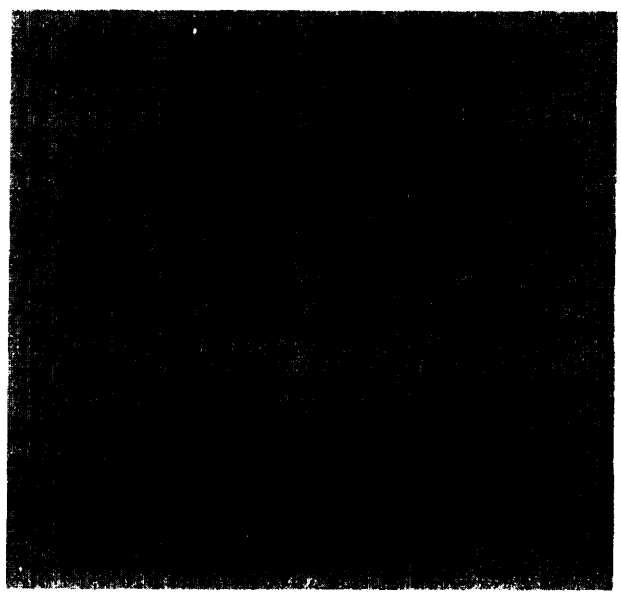

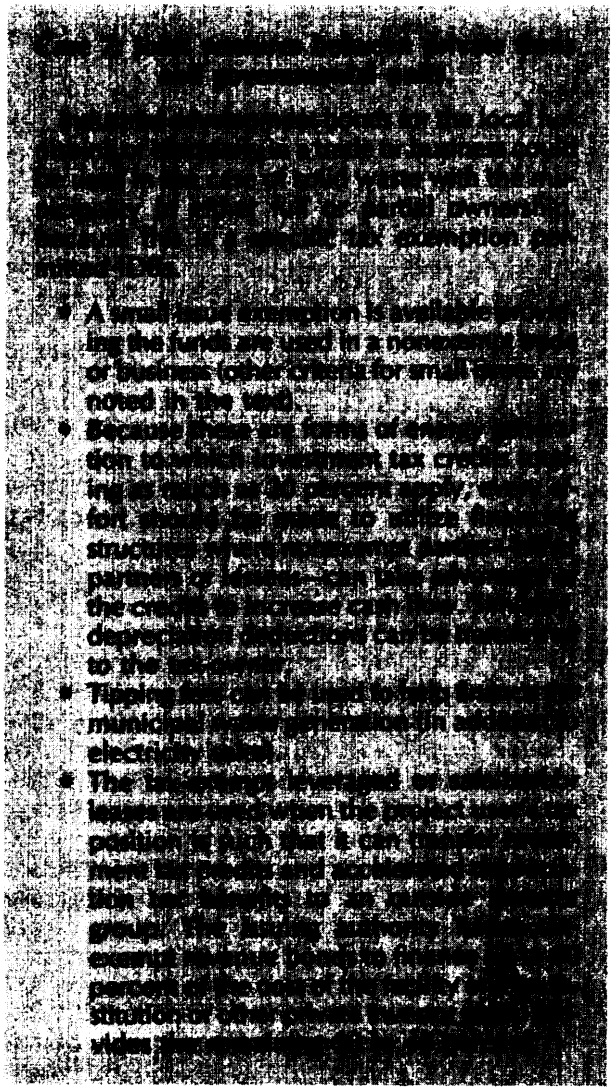

Finally, an innovative financing option for municipal utilities and other local government agencies that has attracted a lot of attention in California is the municipal solar utility (MSU). As originally conceived, an MSU would reduce the capital and maintenance costs of solar hot water systems (or other alternative energy or conservation measures) by: 1) only charging customers for their installation; 2) spreading that charge over the lifetime of the system in the monthly electric bills; and 3) providing continued maintenance (28). More recently, the MSU concept has been expanded to include programs *such* as brokerage of different financial and service packages, dedicated deposits of city funds in local banks for low interest alternative energy loans, or technical assistance and other community outreach programs (60).

Rural Electric Cooperative Ownership

Rural electric cooperatives are finding it more difficult to purchase additional electricity from their traditional sources (IOUS and Federal power authorities) and consequently are being forced to build or participate in new generating capacity. Within this context, dispersed facilities (including cogeneration) may be advantageous due to the shorter construction times, greater planning flexibility, and lower capital costs. In addition, alternate energy projects are more readily financed at favorable terms. Such financing includes 35-year loans for feasibility studies under the REA insured loan program, and is designed to help overcome the lack of engineering expertise and other resource constraints faced by small distribution co-ops that wish to add generating capacity. As with other electric utilities, co-ops will prefer projects that provide most of their additional capacity during peak demand periods and whose electricity output is not intermittent (e.g., biomass, hydroelectric, and industrial cogeneration projects).

For a project with IOO-percent co-op ownership, all the benefits accrue to the cooperative's members (e.g., no taxes are paid and no profits are distributed to investors). Capital is raised through an REA guaranteed loan, which means that the cost of capital will be lower than for a private investor because the U.S. Government has guaranteed the loan. Other financing options for cooperatives include joint ventures with local governments or with industrial concerns (see case 8).



CHAPTER 3 REFERENCES

1. *American Electric Power Service Corporation v. FERC,* _____ F.3d _____ (D.C. Circuit, No. 80-1789, 1982).
2. Assistant Secretary for Environmental, Safety, and Emergency Preparedness, *The National Electric Reliability Study, DOE/EP-0005* (Washington, D. C.: U.S. Department of Energy, April 1981).
3. Berlin, Edward, Cicchetti, Charles j., and Gillen, William j., *Perspective On Power* (Cambridge, Mass.: Ballinger Publishing Co., 1974).
4. Cafruny, Madalyn, "Joint Action Report: Growth and Diversity," *Public Power* November-December 1979.
5. California Energy Commission, *Electricity Tomorrow: 1981 Final Report* (Sacramento, Calif.: California Energy Commission, 1981).
6. California Energy Commission, *Energy Tomorrow—Challenges and Opportunities for California* (Sacramento, Calif.: California Energy Commission Biennial Report, 1981).
7. California public Utilities Commission, Decision No. 91107, in Application No. 58545-6 Dec. 19, 1979.
8. California Public Utilities Commission, Decision No. 91109 in 011-26, December 1979
9. California Public Utilities Commission, Decision No. 91272 in 011-42, Jan. 29, 1980; PG&E, Application No. 59537, Mar. 25, 1980.
10. California Public Utilities Commission, Order instituting Rulemaking–11, Jan. 21, 1982.
11. California State Assembly Bill No. 524, 1980.
12. Casten, Thomas, *Cogeneration Technologies 200 kW to 700 kW, Environmental Supplement* (contractor report to the Office of Technology Assessment, 1981).
13. Commonwealth Edison Co., *1979 Annual Report* (Chicago: Commonwealth Edison Co., 1980).
14. Conference Report on H.R. 4018, Public Utility Regulatory Policies Act of 1978, House Report No. 1750, 95th Cong., 2d sess., 1978.
15. Davis, Christopher P., "Federal Tax Subsidies for Electric Utilities: An Energy Policy Perspective," 4 *Harv. Envir. f.. Rev.* 311, 1980.
16. Doyle, Jack, *Lines Across the Land* (Washington, D. C,: Environmental Policy Institute, 1979).
17. Economic Regulatory Administration, *Electric Power Supply and Demand in the Contiguous United States, 79801989 DOE/RG-0036* (Washington, D. C.: U.S. Government Printing Office, June 1980).
18. Economic Regulatory Administration, *The National Power Grid Study, Volume 11,* DOE/ERA-0056-2 (Washington, D. C.: U.S. Department of Energy, September 1979).
19. Economic Regulatory Administration, *Powerplant and Industrial Fuel Use Act Annual Report* (Washington, D. C.: U.S. Department of Energy, March 1981).
20. Edison Electric Institute, *Statistic/ Yearbook of the Electric Utility Industry 7980* (Washington, D. C.: Edison Electric Institute, November 1981).
21. "Electric Utilities of the United States" (map published by *Electrical Work,1977).*
22. Energy and Resource Consultants, Inc., *Federal and State Environmental Permitting and Safety Regulations for Dispersed Electric Generation Technologies* (contractor report to the Office of Technology Assessment, April 1981).
23. Energy Information Administration, *7980 Annual Report to Congress; Volume Three: Forecasts,* DOE/EIA-01 73(80)/3 (Washington, D. C.: U.S. Government Printing Office, 1981).
24. Energy Information Administration, *Statistics of Privately Owned Electric Utilities in the United*

States– 1980, Classes A and B Companies, DOE/EIA-0044(80) (Washington, D, C,: U.S. Government Printing Office, October 1981).
25. Energy Information Administration, *Statistics of publicly Owned Electric Utilities in the U.S.– 1979,* DOE/EIA-01 72(79) (Washington, D. C.: U.S. Government Printing Office, December 1980).
26. Exxon Corp., *Energy Outlook 1980-2000* (Houston: Exxon Corp., December 1980),
27. Federal Energy Regulatory Commission, *Appendix to Draft Environmental Impact Statement, Small Power Production and Cogeneration Facilities—Qualifying Status/Rates and Exemptions, FERC/EIS-019/D* (Washington, D. C.: U.S. Government Printing Office, June 1980).
28. Federal Energy Regulatory Commission, *Final Environmental Impact Statement on Rulemaking for Small Power Production and Cogeneration Facilities–Qualifying Status and Exemptions,* FERC/EIS-0019 (Washington, D. C.: U.S. Government Printing Office, April 1981).
29. Federal Energy Regulatory Commission, *Power Pooling* in *the* United States FERC-0049 (Washington, D. C.: U.S. Government Printing Office, 1981).
30. Finder, Alan E., *The States and Electric Utility Regulation* (Lexington, Ky.: The Council of State Governments, 1977).
31. Henwood, Mark, *Feasibility and Economics of Cogeneration in California's "Thermal Enhanced Oil Recovery Operations* (Sacramento, Cal if.: California Energy Commission, December 1978).
32. Hobart, Larry, "The Case for Joint Action," *Public Power,* November-December 1979.
33. Huyck, Philip M., "Financial Aspects," paper presented at The Energy Bureau Conference on Cogeneration, Washington, D. C., Oct. 13-14, 1981.
34. Hyman, Leonard S., *The Development and Structure of the Electric Utility Industry (New* York: Merrill Lynch Pierce Fenner and Smith Institutional Report, December 1980).
35. Kahn, Edward, and Merritt, Michael, *Dispersed Electricity* Generation: *Planning and Regulation* (contractor report to the Office of Technology Assessment, February 1981).
36. Kaufman, Alvin, Jones, Douglas N., and Daly, Barbara, *The Electric Utility Sector: Concepts, Practices, Problems* (Washington, D. C.: Library of Congress, Congressional Research Service, 1977).
37. L. W. Bergman & Co., *Financing and Ownership of Dispersed Electricity Generating Technologies* (contractor report to the Office of Technology Assessment, February 1981).
38. Lock, Reinier H. J. H., "Statewide Purchase Rates Under Section 210 of PURPA," 3 *Solar f.. Rep.* 419 (September/October 1981).
39. Lock, Reinier H. J. H., and Van Kuiken, Jack C., "Cogeneration and Small Power Production: State Implementation of Section 210 of PURPA," 3 *Solar L.. Rep.* 659 (November/December 1981).
40. Messing, Marc, Friesema, H. Paul, and Morrell, David, *Centralized Power* (Washington, D, C.: Environmental Policy Institute, 1 979).
41. Meyer, Joseph G., "One Utility's Approach," paper presented at The Energy Bureau Conference on Cogeneration, Washington, D. C., Oct. 13-14, 1981.
42. *Mississippi v. FERC,* Civil Action No. J79-0212(c), (S.D. Miss., 1980).
43. Missouri Public Service Commission, Report and Order in Case No. ER-80-48, June 19, 1980.
44. Mitchell, Ralph C., Ill, et al., presentation to OTA staff on Cogeneration in the Arkansas Power & Light Co. service area, Washington, D. C., Nov. 19, 1981.
45. National Rural Electric Cooperative Association, personal communication to the Office of Technology Assessment.
46. Navarro, Peter, "The Soft, Hard, or Smart Path: Charting the Electric Utility Industry's Future," 107 *Pub. Util. Fort. 25,* June 18, 1981.
47. Nevitt, Peter K., *Project Financing* report prepared for BankAmeriLease Group Companies by Advanced Management Research, Inc. (2d cd.).
48. New York public Service Commission, Case 27574, 1980.
49. North American Electric Reliability Council, *Electric Power Supply and Demand 1982-1991* (Princeton, N.J.: North American Electric Reliability Council, 1982).
50. Office of Technology Assessment, U.S. Congress, *Energy Effciency of Buildings in Cities,* OTA-E-168 (Washington, D. C.: U.S. Government Printing Office, March 1982).
51. Office of Technology Assessment, U.S. Congress, *The Direct Use of Coal* OTA-E-86 (Washington, D. C.: U.S. Government Printing Office, April 1979).
52. Office of Technology Assessment, U.S. Congress, *World Petroleum Availability; 19802000–A Technical Memorandum,* OTA-TM-E-5 (Washington, D. C.: U.S. Government Printing Office, October 1980).
53. Olson, Charles E., "Public Utility Regulation in Practice and Its Impact on Electricity Demand and

Production," in *Studies in Electric Utility Regulation,* Charles J, Cicchetti, and John L. Jurewitz (eds.) (Cambridge, Mass.: Ballinger Publishing Co., 1975).
54. Pacific Gas & Electric, "Special Announcement About Co-generation and Small Power Production," San Francisco, Calif., February 1980.
55. "Public Power Directory," *Public Power,,* January-February 1982.
56. *Public Utility Regulatory Policies Act,* Public Law 95-617, 92 Stat. 3140; title 1, which relates to retail rates, is codifed at 16 U.S.C. 2611 et seq.; title 11, which affects wholesale rates, is included in The Federal Power Act at 16 U.S.C. 824 et seq.
57. Resource Planning Associates, *Power Pooling: Issues and Approaches, DOE/ERA/6385-l* (Washington, D. C.: U.S. Department of Energy, January 1980).
58. Resource Planning Associates, *The Potential for Cogeneration Development by 1990* (Cambridge, Mass: Resource Planning Associates, July 1981).
59. RMR Associates, *Cogeneration Potential–Enhanced Oil Recovery* (Palo Alto, Cal if.: Electric Power Research Institute, August 1981).
60. Saitman, Barry, and Garfield-Jones, Susanne, *Municipal Solar Utilities in California: A Status Report (Sacramento,* Calif.: California Energy Commission).
61. Solar Energy Research Institute, *A New Prosperity (Andover,* Mass: Brick House Publishing, 1981).
62. Spuhler, T. W., "Cogeneration Program at SoCal Gas," paper presented at California Governor's Office of Planning and Research Conference on Cogeneration: Energy for the 80s and Beyond, Los Angeles, Calif., Oct. 24-25, 1980.
63< Studness, Charles M., "Calendar 1981 Electric Utility Financial Results," 109 *Pub. Util. Fort. 46,* May 13, *1982.*
64, Studness, Charles M., "Genesis of the Current Financial Plight of the Electric Utilities, " 105 *Pub. Util. Fort. 54,* June 19, 1980,
65. Testimony of Bruce Larson, Illinois Commerce Commission, Docket No. 78-0646, August 1980.
66. U.S. Congress, Senate hearings before the Committee on Appropriations, "Agriculture, Rural Development, and Related Agencies Appropriations," fiscal year 1980, 96th Cong., 1st sess., Part 1 —Justifications.
67. 10 CFR Parts 503-506.
68. 18 CFR 292.101.
69. 18 CFR 292.205.
70. 18 CFR 292.206.
71. 18 CFR 292.303.
72. 18 CFR 292.304.
73. 18 CFR 292.305.
74. 18 CFR 292.306.
75. 45 Fed. Reg. 12214 (Feb. 25, 1980).
76. 45 Fed. Reg. 17959 (Mar. 20, 1980).
77, 45 Fed. Reg. 38302 (June 6, 1980).
78. 45 Fed. Reg. 53368 (Aug. 11, 1980).

Chapter 4

Characterization of the Technologies for Cogeneration

Contents

Page

introduction 117

Cogeneration Technologies 122
- Steam Turbines. 122
- Open-Cycle Combustion Turbines 125
- Closed-Cycle Combustion Turbines 127
- Combined Cycles 129
- Diesels 131
- Rankine Cycle Bottoming 133
- Fuel Cells 137
- Stirling Engines 139

Use of Alternative Fuels in Cogeneration 142
- Fluidized Bed Combustion Systems 142
- Gasification 143

{interconnection 146
- Power Quality 146
- Metering 151
- Controlling Utility System Operations 151
- Safety 153
- Liability 154

Page

- Summary of Requirements 154
- Quality of interconnection Equipment 154
- Guidelines for interconnection ~ 155
- Costs for interconnection 157
- Summary 158

Thermal and Electric Storage 159
- Thermal Storage.. 159
- Electric Storage.. 161

Cogeneration and District Heating. 163

Chapter preferences 165

Tables

Table No. Page

21. Thermal Analysis of Ideal and Real Heat Engines 118
22. Performance Characteristics of Alternative Electricity-and Steam-Production Systems 119

Table No. Page
23. Summary of Cogeneration Technologies. . 120
24. Diesel Engine Characteristics 131
25. Estimates of Steam Bottoming Cycle Operation and Maintenance Costs 136
26. Cogeneration interconnection Sample costs 157
27. Interconnection Costs for Three Typical Systems 158
28. Thermal Energy Storage Capacity Range v. Plant Size. 160
29. Cost and Performance Characteristics of Advanced Batteries 162
30. Expected Technical and Cost Characteristics of Selected Electrical Energy Storage Systems 163

Figures

Figure No. Page
16. Comparison of Energy Utilization in a Cogeneration System and a Conventional Powerplant. 119
17. Steam Turbine Topping System in a Cogeneration Configuration 123
18. Estimated Steam Turbine Cogenerator System Installed Costs With Different Heat Sources 124
19. Combustion Turbine 125
20. Schematic of a Simple Open-Cycle Combustion Turbine in a Cogeneration Application 126
21. Combustion Turbine Cogenerator Cost Estimates for the Prime Mover and Total Installed System 127
22. Closed-Cycle Gas Turbines With and Without Regeneration 128
23. Closed-Cycle Gas Turbine Cogenerator Installed Cost 129
24. Schematic of a Combined-Cycle Cogenerator. 130
25. Total Installed Costs for Combined-Cycle Cogenerator Systems 131
26. Diesel Engine Cogenerator 132
27. Diesel Cogenerator Total Installed Costs for Current and Advanced Prime Movers 133
28. Steam Rankine Bottoming Cycle 133
29. Organic Rankine Bottoming Cycle. 134
30. Organic Rankine Bottoming Cycle Efficiency-Variation With Peak Cycle Temperature 135
31. Typical Energy Balances for Steam Rankine Bottoming Systems 135
32. Estimated Installed Costs for Condensing and Non-condensing Steam Rankine Bottoming Systems 136
33. Estimated Installed Costs for Organic Rankine Bottoming System. 136
34. Schematic Diagram of a Fuel Cell 137
35. Schematic ofa Fuel Ceil Powerplant. 138
36. Representative Performance of Fuel Cell Powerplants 139
37. Future Estimates of Total Installed Costs for Fuel Cell Powerplant Systems. . . 140
38. Schematic of a Stirling Cycle Engine 140
39. Waste Heat Availability From Different Engines 141
40. Future Installed Costs for Stirling Engine Cogenerator Powerplants 141
41. Possible Power System Additional Equipment Requirements to Serve Qualifying Facilities 155
42. Low-Temperature Thermal Storage Cost per kWh_t v. Storage Capacity 160
43. High-Temperature Thermal Storage Cost per kWh_t v. Storage Capacity.. 161
44. European Cogeneration District Heating System 164

Box

A. Thermodynamic Efficiency of Cogeneration. 118

Chapter 4
Characterization of the Technologies for Cogeneration

INTRODUCTION

Cogeneration systems recapture otherwise wasted thermal energy, usually from a heat engine producing electricity (such as a steam turbine, gas turbine, or diesel engine), and use it for space conditioning, industrial processes, or as an energy source for another system component (31). This "cascading" of energy use is what distinguishes cogeneration systems from conventional separate electric and thermal energy systems (e.g., a powerplant and an industrial boiler), or from simple heat recovery strategies. The automobile engine is a familiar cogeneration system that provides mechanical shaft power to move the car, produces electricity with the alternator to run the electrical system, and recirculates the engine's otherwise wasted heat to provide comfort conditioning in the winter.

This chapter characterizes the technical features of cogeneration systems, including an overview of the general fuel use and energy production considerations common to all cogenerators, a description of the operating characteristics and costs of both commercially available and promising future cogeneration technologies, and a discussion of ancillary systems such as those for interconnecting cogenerators with the utility grid, for improving cogenerators' fuel flexibility, and for storing the electric or thermal energy. A more detailed characterization of cogeneration technologies may be found in volume II of this report.

The principal technical advantage of cogeneration systems is their ability to improve the efficiency of fuel use in the production of electric and thermal energy. Less fuel is required to produce a given amount of electric and thermal energy in a single cogeneration unit than is needed to generate the same quantities of both types of energy in separate, conventional technologies (e.g., turbine-generator sets and steam boilers). This is because waste heat from the turbine-generator set, which uses a substantial quantity of the fuel used to fire the turbine, becomes useful thermal energy in a cogeneration system (e.g., process steam) rather than being "wasted. " To be sure, this usually requires some reduction in the amount of electricity produced compared to a stand-alone turbine generator, but this "sacrifice" usually is acceptable to gain the 10- to 30-percent increase in overall fuel efficiency offered by cogeneration (31). To see more clearly how this gain is achieved, box A provides a detailed look at the thermodynamics of cogeneration.

The relative efficiency of cogenerators and conventional powerplants is shown in figure 16. In a conventional steam plant (which generally uses a Rankine cycle), energy must be added to the feedwater in the boiler in sufficient amounts to raise it up to point A in figure 16 (steam for power generation). However, due to inherent inefficiencies in the Rankine cycle turbine, the condensing turbines that drive the generators can only utilize the amount of energy between points A and C in the figure (steam at the boiling point) to generate electricity. Thus, the large amount of energy from the boiler feedwater level to point C is lost as the steam is condensed by cooling water, carrying off the heat, and rejecting it to the environment.

In the cogeneration plant in figure 16, the energy from A to B (steam) is used to generate electricity, the energy from B to D (water at boiling point) is used as process steam, and only the energy from D down to the feedwater level is rejected to the environment. Thus, the cogenerator allows use of some of the energy that the conventional powerplant otherwise would waste. Level B is determined by the temperature required for the process steam.

Different types of cogenerators have differing fuel use characteristics and produce different proportions of electricity and steam. The electricity-to-steam (E/S) ratio refers to the relative proportions of electric and thermal energy produced by a cogenerator. The E/S ratio is measured in kilowatthours per million Btu (kWh/MMBtu) of steam (or useful thermal energy), and varies among the

efficiencies but higher second law efficiencies and save more fuel. This distinction is recognized in the topping cycle cogeneration efficiency standards set by the Federal Energy Regulatory Commission under the Public Utility Regulatory Policies Act, which give a 2-to-1 weighting to electricity generation compared to thermal energy production (see ch. 3).

Table 22.—Performance Characteristics of [illegible]

	[illegible]	[illegible]	[illegible]	[illegible]
Central station electricity generation	[illegible]	[illegible]	[illegible]	[illegible]
Process steam production (e.g., in an industrial boiler, about 850° F)	[illegible]	[illegible]	[illegible]	[illegible]
Cogeneration systems:				
Steam turbine	[illegible]	[illegible]	[illegible]	[illegible]
Gas turbine	[illegible]	[illegible]	[illegible]	[illegible]
Combined cycle (gas/steam turbine)	[illegible]	[illegible]	[illegible]	[illegible]
Diesel	[illegible]	[illegible]	[illegible]	[illegible]

[illegible]

SOURCE: Marc H. Ross and Robert H. Williams, "Industrial Cogeneration [illegible] Trol (New York: McGraw-Hill Book Co., 1981); Robert H. Williams, [illegible] Calif.: Annual Reviews, Inc., 1978).

Figure 16.—Comparison of Energy Utilization In a Cogeneration System and a Conventional Powerplant

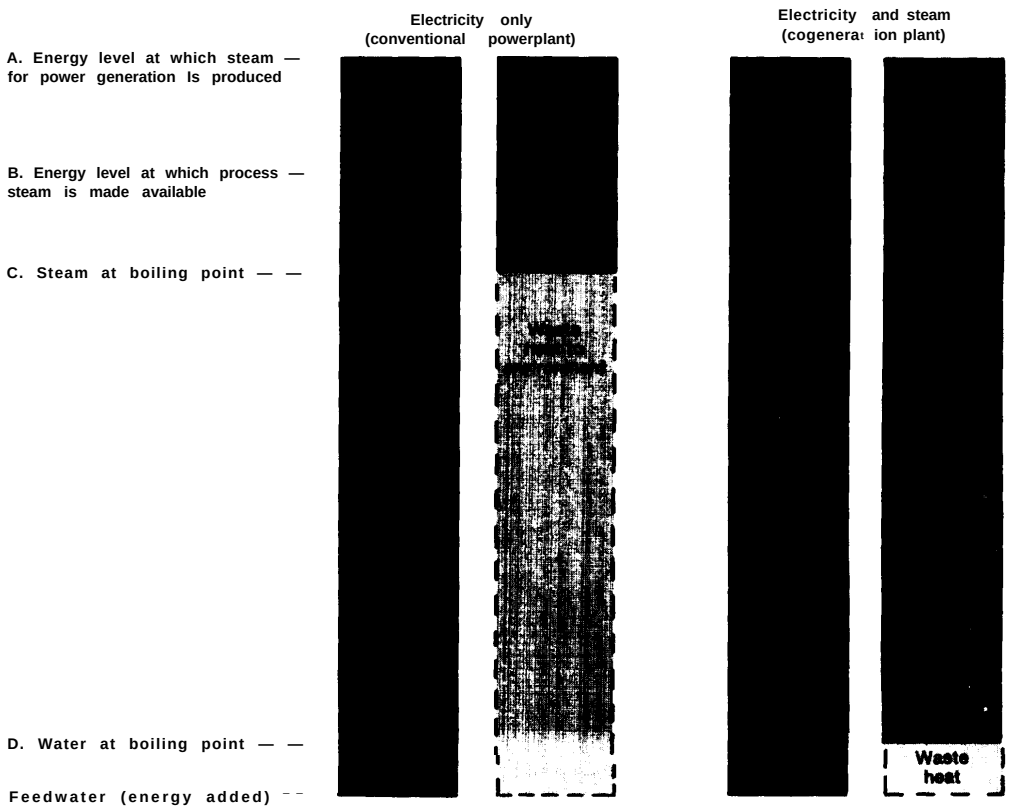

SOURCE: Dow Chemical Co., et al., *Energy industrial Canter Study (Washington,* D. C.: National Science Foundation, June 1975).

different types of cogeneration technologies (see table 23).

The total heat rate refers to the total amount of fuel (measured in Btu) required to produce 1 kwh of electricity, with no credit given for the use of "waste heat." The net heat rate (also measured in Btu/kWh) credits the thermal output and denotes the fuel required to produce electricity, beyond what would be needed to produce a given quantity of thermal energy in a separate facility (e.g., a boiler). In a central powerplant, where no heat is recovered, an average total heat rate is 10,500 Btu/kWh (60). Cogenerators have a net heat rate of about 4,300 to 7,500 Btu/kWh depending on the characteristics of the thermal energy produced. Thus, depending on the cogenerator type and how completely the thermal output is utilized, electricity can be produced by a cogenerator with about one-half to three-fourths the fuel used in central power generation (45,60). Fuel use efficiency for a cogenerator gives credit to the thermal output; hence it is the ratio of electric output plus heat recovered in Btu to fuel input in Btu.

Table 21 presents a numerical example of heat rates and fuel efficiency-based on modern steam turbines—that compares: 1) an ideal engine exhausting to a low temperature, 2) a real engine exhausting to a low temperature (typical of a utility powerplant), 3) a real engine exhausting at a higher temperature with the heat wasted (something that is best to avoid), and 4) a real engine exhausting at a higher temperature with the heat utilized (as with a cogenerator). it is noted that, in the example in table 21, the fuel use efficiency varies from 35 percent for the utility powerplant to 75 percent for the cogenerator.

Table 23.—Summary of Cogeneration Technologies

Technology	Unit size	Fuels used (present/possible In future)	Average annual availability (percent)	Full-load electric efficiency (percent)	Part-load (at 50°/0 load) electrlc efficiency (percent)	Total heat rate (Btu/kWh)	Net heat rate (Btu/kWh)	Electricity-to-steam ratio (kWh/MMBtu)
A. Steam turbine topping	500 kW-100 MW	Natural gas, distillate, residual, coal, wood, solid waste/coal- or biomass-derived gases and liquida.	90-95	14-28	12-25	12,200-24,000	4,500-6,000	30-75
B. Open-cycle gas turbine topping	100 kW-100 MW	Natural gas, distillate, treated resldual/coal- or biomass-derived gases and liquids.	*90-95*	24-35	19-29	9,750-14,200	5,5004,500	140-225
G. Glosed-cycle gas turbine topping	500 kW-100 MW	Externally fired—can use most fuels.	90-95	*30-35*	30-35	9,750-11,400	5,400- 6,500	150-230
D. Comblned gas turbine/steam turbine topping	4 MW-1OO MW	Natural gas, dlstllate, resldual/coal- or blomass-dertved gases and liquids.	77-65	*34-40*	25-30	8,000-10,000	5,000- 6,000	175-320
E. Diesel topping	75 kW-30 MW	Natural gas, distillate, treated residual/coal- or biomass-derived gases and liquids, slurry or powdered coals.	60-90	33-40	32-39	6,300-10,300	6,000-7,500	350-700
F. Rankine cycle bottoming:								
Steam	500 kW-10 MW	Waste heat.	90	10-20	Comparable to full load	17,000-34,100	NA	NA
Organic	2 kW-2 MW	Waste heat.	80-90	10-20	Comparable to full load	17,000-34,100	NA	NA
G. Fuel cell topping	40 kW-25 MW	Hydrogen, distllate/coal.	90-92	37-45	3745	7,500-9,300	4,300-5,500	240-300
H. Stirling engine topping	3-100 kW (expect 1.5 MW by 1990)	Externally fired—can use most fuels.	Not known- expected to be similar to gas turbines and diesels,	35-41	34-40	8,300-9,750	5,500-6,500	340-500

Table 23.—Summary of Cogeneration Technologies—Continued

Technology	Total installed cost ($/kW)[a]	Operation and maintenance cost: Annual fixed cost ($/kW)	Operation and maintenance cost: Variable cost (millions/kWh)	construction leadtime (years)[b]	Expected lifetime (years)	Commercial status	Cogeneration applicability
A. Steam turbine topping	550-1,600	1.6-11.5	3.0-8.8	1-3	25-35	Mature technology —commercially available In large quantities.	This Is the most commonly used cogeneration technology. Generally used in industry and utility applications. Best suited for where electric/thermal ratio is low,
B. Open-cycle gas turbine topping	320-700	0.29-0.34	2.5-3.0	0.75-2	20 natural gas 15 distillate	Mature technology —commercially available in large quantities.	Potential for use in residential, commercial, and industrial sectors if fuel is available and cost effective.
C. Closed-cycle gas turbine topping	450-900	5 percent of acquisition cost per year	Included in fixed cost	2-5	20	Not commercial in the United States; is well developed in several European countries.	Best suited to larger scale utility and industrial applications. Potential for coal use is excellent,
D. Combined gas turbine/steam turbine topping	430-600	5.0-5.5	3.0-5.1	2-3	15-25	Commercially available; advanced systems by 1965.	Most attractive where power requirements are high and process heat requirements are lower, Used in large industrial applications such as Steel, chemical, and petroleum refining industries.
E, Diesel topping	350-600	6.0-8.0	5.0-10.0	0.75-2.5	15-25	Mature technology —commercially available in large quantities.	Reliable and available, can be used in hospitals, apartment complexes, shopping centers, hotels, Industrial centers if fuel is available and cost effective, and if can meet environmental requirements.
F. Rankine cycle bottoming: Steam	550-1,100	1,6	3.7-6.9	1-3	20	Commercially available	Industrial and utility use almost exclusively. Although efficiency is low, since it runs on waste heat no additional fuel is consumed. Can reduce overall fuel use.
Organic	600-1,500	2.8	4.9-7.5	1-2	20	Some units are commercially available but technology is still in its infancy.	Same benefits/limitations as steam Rankine bottoming except that it can use lower-grade waste heat. Organic Rankine bottoming is one of the few engines that can use waste heat in the 2000 600"F range.
G. Fuel cell topping	520-840[c]	0.26-33	1.0-3.0	1-2	10-15	Still in development and experimental stage. phosphoric acid expected by 1965, molten carbonate by 1990.	Modular nature, low emissions, excellent part-load characteristics allow for utility load following as well as applications in commercial and industrial sectors.
H. Stirling engine topping	420-960[c]	5.0	8.0	2-5	20	Reasonably mature technology up to 100-kW capacity but not readily available. Larger sizes being developed.	High efficiency and fuel flexibility contribute to a large range of applications Could be used in residential, commercial, and industrial applications. Industrial use depends on development of large Stirling engines.

"NA" means not applicable.
a960 dollars.
bDepends on system size and heat source.
cCost estimates assume successful development and commercial-scale production, and are not guaranteed.

SOURCE: Office of Technology Assessment from material in ch. 4.

98-948 O - 83 - 9 : QL 3

COGENERATION TECHNOLOGIES

Most cogeneration systems can be described either as "topping" systems or "bottoming" systems, depending on whether the electrical or thermal energy is produced first. * In a topping system—the most common cogeneration mode—electricity is produced first. The thermal energy that is exhausted is captured and used for such purposes as industrial processes, space heating and cooling, water heating, or even producing more electricity *(18).* Topping systems would be used in residential/commercial and most industrial cogeneration applications.

In a bottoming system, high-temperature thermal energy is produced first for applications such as steel reheat furnaces, glass kilns, or aluminum-remelt furnaces. Heat is extracted from the hot exhaust waste stream and transferred to a working fluid, generally through a waste heat recovery boiler. The fluid is vaporized and used to drive a turbine (Rankine cycle) to produce electrical energy (18). Bottoming cycles are used mostly in industries where high-temperature waste heat is available, and thus are limited to a few industrial processes. Further, they tend to have a higher capital cost than topping systems.

The cogeneration systems described below are: 1) steam turbine topping, 2) open-cycle gas turbine topping, 3) closed-cycle gas turbine topping, 4) combined-cycle (gas/steam turbine) topping systems, 5) diesel topping, 6) Rankine cycle (steam and organic) bottoming, 7) fuel cell topping, and 8) Stirling engine topping. A fuel cell, being a chemical device, is the only technology that is not a heat engine although it is considered a topping cycle cogeneration system.

These technologies include small systems (75 kW to 10 megawatts (MW)) that might be used to supply electricity and heat for a single building or a building complex such as a shopping center; intermediate size cogenerators of several to tens of megawatts for industrial applications; and large centralized systems that could supply electricity to the utility grid and distribute steam to nearby industries or to district heating systems. Potential cogeneration applications in industry, commercial buildings, and rural areas are discussed in detail in chapter 5.

The steam turbine, open-cycle gas turbine, combined-cycle, diesel, and steam Rankine bottoming cogenerators represent commercially available technologies although advanced models with improved efficiency, lower cost, and greater fuel flexibility are under development. The closed-cycle gas turbine is available in other countries and could be introduced in the United States at any time. Organic Rankine bottoming cycles, fuel cells, and Stirling engines are not commercially available in the United States, but are sufficiently well developed to be considered "near term" cogeneration technologies (available within 5 to 15 years). As with all predictions of commercial readiness for developing technologies, however, care must be exercised and actual progress observed closely–as noted from the long and difficult history of Stirling engines.

The general operating and performance characteristics and costs of these cogeneration technologies are summarized below and in table 23. Detailed technology descriptions may be found in volume II.

Steam Turbines

Historically, steam turbines have been the primary cogeneration technology, providing mechanical and electric power and steam for a variety of industrial processes. A schematic of a steam turbine in a cogeneration application is shown in figure 17. The system consists of a boiler and a back pressure turbine. Mechanical energy is produced as the high-pressure steam from the boiler drives the turbine. The mechanical energy is then converted to electricity by turning a generator rotor attached to the turbine. The steam, which leaves the turbine at a reduced pressure and temperature (300° to 700° F), can be used in many industrial applications (see ch. 5).

*Operating and efficiency standards for topping and bottoming cycle cogenerators promulgated by the Federal Energy Regulatory Commission under the Public Utility Regulatory Policies Act are discussed in ch. 3.

Figure 17.—Steam Turbine Topping System in a Cogeneration Configuration

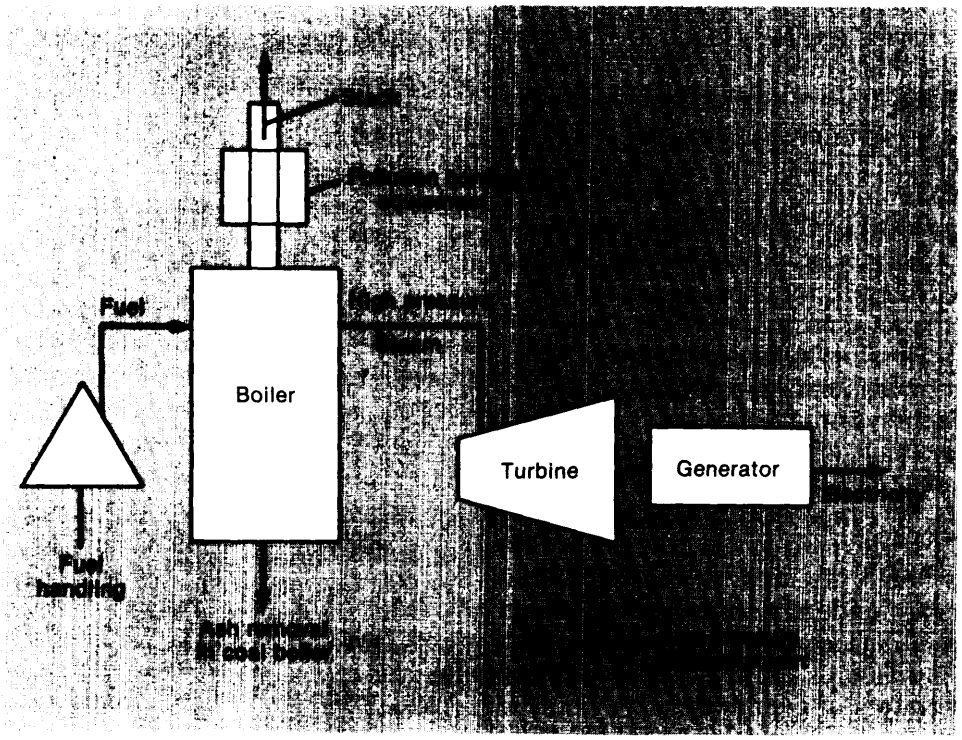

SOURCE: Thermo Electron Corp., *Analysis of Cogeneration Systems Applicable to the State of New Jersey* (Waltham, Mass.: Thermo Electron Corp., TE5486-103-8O, December 1979).

The technical and operating characteristics of steam turbines present both advantages and disadvantages relative to other types of cogenerators. Steam turbine engines are available in a wide range of sizes, from 500 kW to well over 550 MW, although 100 MW is probably a reasonable ceiling for most industrial applications. Currently, steam turbine boilers can accommodate a wider variety of fuels than other available cogeneration systems (including oil, natural or synthesis gas, coal, wood, solid waste, and industrial byproducts), although individual boilers can only be designed to accommodate two fuel sources at one time (i.e., dual-fueled boilers can be built to use oil or gas, coal or oil, gas or coal). Steam turbine cogenerators also have extremely high unit reliability, availability, and service lifetime. With respect to reliability, steam turbines have a maximum forced outage rate of around 5 percent. Their unit availability also is quite high (90 to 95 percent) because scheduled maintenance requirements are relatively low. The expected service lifetime of steam turbine cogenerators is from 25 to 35 years.

A final technical advantage of steam turbine cogenerators is their high overall fuel efficiency, which ranges from 65 to 85 percent, and generally is not affected by turbine inlet temperatures or by part-load operation (when less than the maximum possible amount of electricity is being produced). However, steam turbines' efficiency of electricity generation increases with increasing inlet temperature and pressure ratio, and with size up to about 30 MW.

On the other hand, steam turbine cogenerators have relatively long installation leadtimes–12 to 18 months for smaller systems and up to 3 years for larger units—from the time equipment is ordered until operation begins. This is due primarily to the time required to certify and install high-pressure boilers. For coal burning systems, the installation of fuel handling equipment can add significantly to the leadtime.

Steam turbines also have relatively low ratios of electric-to-thermal power production (E/S ratio) because they have a relatively low upper temperature limit. It is this temperature which, in combination with the desired steam temperature, determines the amount of electricity that can be generated. Of the 85 percent useful energy obtainable in steam turbine cogeneration systems, typically 14 percent would be electric power and 71 percent process heat. However, the E/S ratio will vary according to the amount of high-pressure steam that is directed from the boiler for process heat. Thus, an increase in process steam temperature corresponds to a decline in electric power production and an increase in heat production. Overall fuel utilization (power plus heat) remains relatively constant at a variety of process temperatures. All that changes is the proportion of total fuel use devoted to electric generation and process heat. Research and development (R&D) efforts are underway on advanced steam turbine models that would operate at higher temperatures and pressures and thus would be more efficient generators of electricity.

The costs of steam turbine cogenerators vary depending on the size of the system, the kind of fuel it uses, and its combustion source (e.g., boiler, fluidized bed combustor, gasifier). Figure 18 presents total installed costs for steam turbine systems. Coal-fired steam turbines with flue gas desulfurization (FGD) (for environmental control purposes) range in cost from $800 to $1 ,600/kW installed capacity. These systems constitute the most expensive steam turbine option, with costs generally $200/kW greater than turbines with fluidized bed boilers, which would not need FGD in order to meet air quality standards. Oil-fired boilers for steam turbines constitute the least expensive option, with installed cost estimates ranging from $550 to $800/kW—about $200 to $600/kW below the expected costs for atmospheric fluidized bed (AFB) boiler turbines. * Economies of scale are evident for steam turbine cogenerators larger than about 10 MW.

Figure 18.—Estimated Steam Turbine Cogenerator System Instaiied Costs With Different Heat Sources

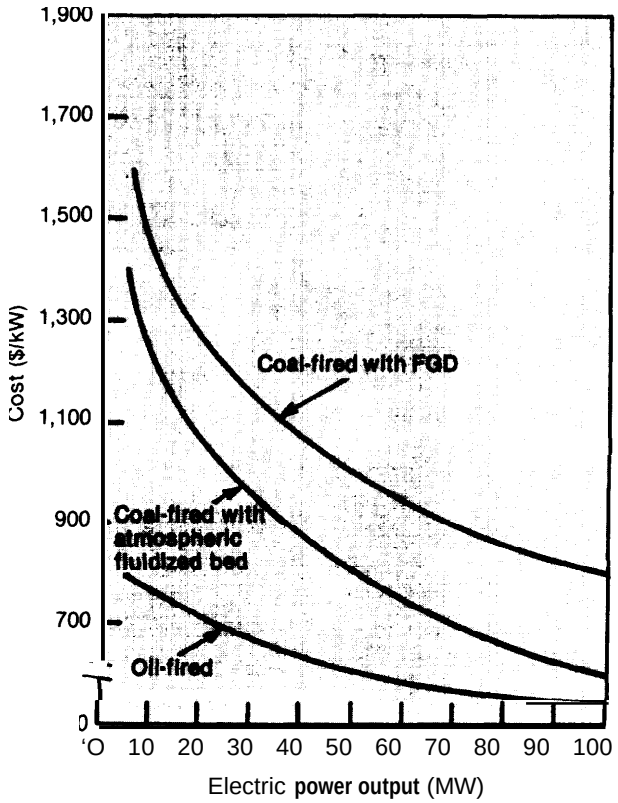

SOURCE: Off Ice of Technology Assessment.

The cost for advanced steam turbine prime movers also differs according to the size of the unit. For smaller units (less than 5 MW), advanced steam turbine installed costs may be $150 to $200/kW greater than the cost of current steam turbines. For 1O-MW units, the incremental cost of advanced steam turbines is approximately $5o to $100/kW greater, while for 100-MW units, the prices are approximately the same as currently available systems (55).

Estimates for variable operation and maintenance (O&M) costs for steam turbine topping cycles (excluding fuel cost) vary from 3.0 to 8.8 milis/kWh depending on the source of the estimate. For a residual oil-fired steam turbine, in general, a 4.0 mills/kWh O&M cost appears to be a reasonable estimate. Estimates of O&M costs for large steam turbines are 6.0 mills/kWh with FGD, 4.2 mills/kWh without FGD, 5.2 mills/kWh with AFBs, and 8.8 mills/kW/h with pressurized

***It should be noted that estimates for steam turbine system costs vary greatly according to the data source. The degree of accuracy of the different estimates is difficult to verify without actual construction of the various systems.**

fluidized beds. Fixed annual O&M costs range from $1.6 to $1 1.5/kWh of installed capacity.

Open= Cycle Combustion Turbines

Most combustion turbines are open-cycle systems in which air is drawn in from the atmosphere and exhaust gases are released to the atmosphere (i. e., the air or other working fluid is not recirculated). Figure 19 provides system schematics for both simple and regenerative open-cycle gas turbines. Figure 20 presents the configu ration a simple open-cycle combustion turbine with a heat recovery unit would take in a cogeneration application. For both simple and regenerative turbine types, air is compressed, then heated in the combustion chamber to the required turbine inlet temperature, and expanded through the turbine. The primary difference between the simple and regenerative open-cycle

Figure 19.—Combustion Turbine

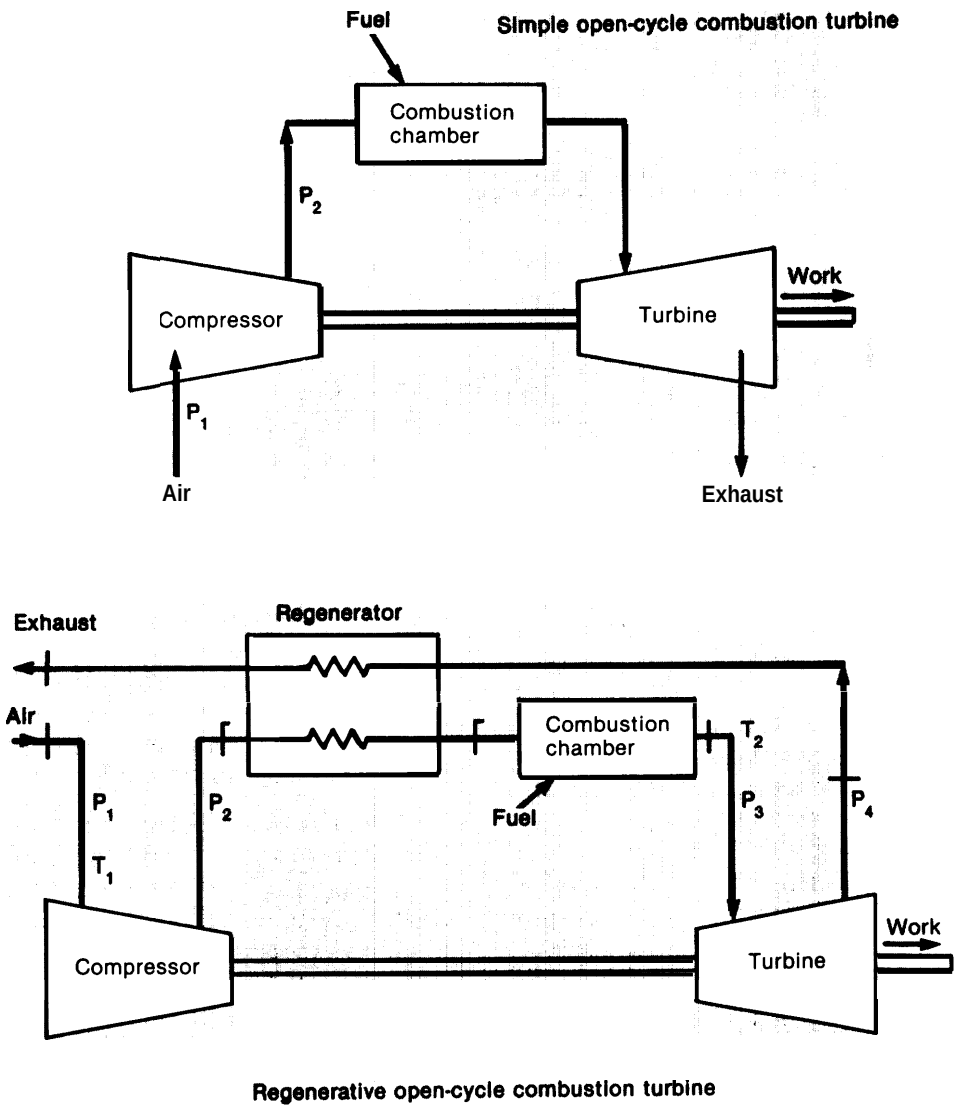

SOURCE: Arthur D. Little, Inc., *Distributed Energy Systems: A Review of Related Technologies* (Washington, D. C.: U.S Department of Energy, DOE/PE 03871-01, November 1979).

Figure 20.-Schematic of a Simple Open-Cycie Combustion Turbine in a Cogeneration Application

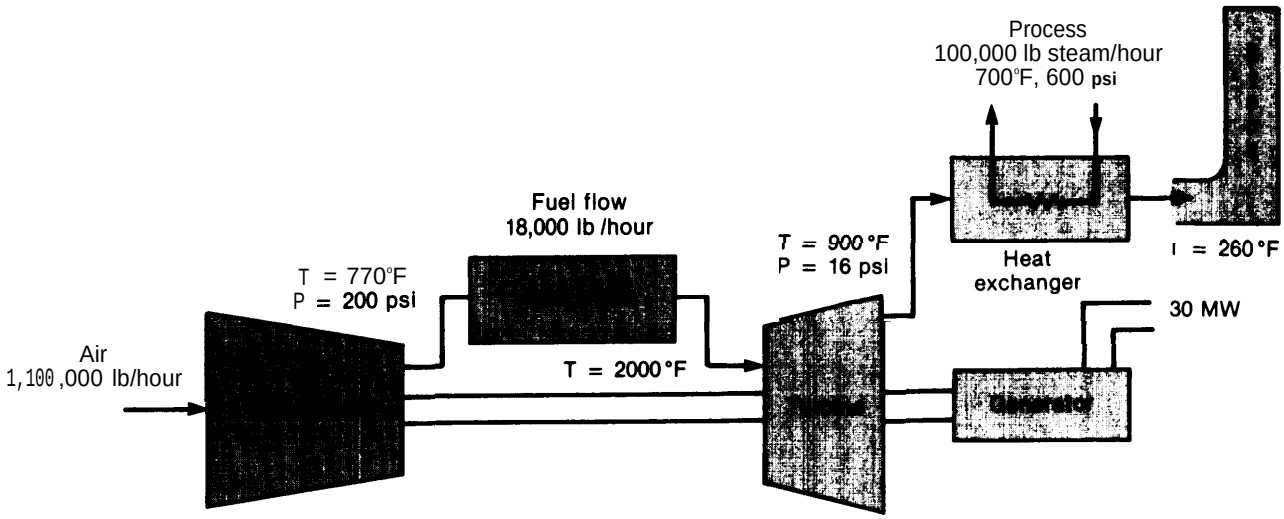

SOURCE: United Technologies Corp., *Cogeneration Technology Alternative Study (CTAS) — Volumes I-VI* (Cleveland, Ohio: National Aeronautics and Space Admin. istration, Lewis Research Center, and Washington, D. C.: U.S. Department of Energy, DOE/NASA/00W80/1 -6, January 1980).

turbines is that in the latter, the low-pressure hot exhaust gases are used to preheat the high-pressure compressor discharge air in a regenerator. The waste heat boiler system recovers heat from the hot gas produced by the turbine and generates high- and low-pressure thermal energy to be utilized in industrial processes or for space conditioning.

Simple open-cycle combustion turbine systems with waste heat boilers currently are available in size ranges from 100 kw to 100 MW. Regenerative turbines are available in sizes from about 16 MW to 70 MW. Most combustion turbines burn natural gas or diesel oil, and can be converted from one to the other in about 1 day. Because turbine blades in open-cycle systems are exposed to the products of combustion, these products must be free of impurities (e.g., sodium, potassium, calcium, vanadium, iron, sulfur, and particulates) that can cause corrosion, and the residual solids must be small enough to avoid erosion of the turbine blades. As a result, currently available open-cycle combustion turbines cannot use solid fuels (coal, biomass) directly (i.e., without first liquefying or gasifying them), and cannot burn residual oil or liquid or gaseous fuels from coal or biomass without an auxiliary fuel cleaning system (see discussion of fuel flexibility in the next section).

Open-cycle combustion turbine cogenerators have a shorter installation leadtime than steam turbines—around 9 to 14 months for gas turbines up to 7 MW, and as long as 2 years for larger units. The reliability of combustion turbines and their average annual availability should be comparable to that of steam turbines, although units that burn liquid fuels or that are operated only intermittently will require about three times more maintenance—and thus will have a lower percent availability—than those that use natural gas. On the other hand, the expected useful service life of open-cycle combustion turbines tends to be lower than that of steam turbines–typically 15 to 20 years—and poor maintenance, the use of liquid fuels, or intermittent operation can reduce the service life substantially.

Open-cycle combustion turbine cogenerators tend to have slightly lower overall fuel efficiency than steam turbines, but the most efficient combustion turbines can have a higher overall efficiency than the least efficient steam turbines. on the other hand, open-cycle combustion turbines have much higher E/S ratios than steam turbines (typically 140 to 225 kWh/MMBtu for combustion turbines, as compared to 30 to 75 kWh/. MMBtu for steam turbines), and a higher electric generating efficiency at both full- and part-load operation (see table 23). Unlike steam tur-

bines, however, combustion turbine cogenerators' electric efficiency is reduced significantly by part-load operation. Moreover, the efficiency of open-cycle combustion turbines varies with the addition of a regenerator, because regenerative cycles produce additional electricity at the expense of recoverable thermal energy and overall efficiency. Therefore, for cogeneration applications, **overall fuel efficiency** will be higher with simple open-cycle combustion turbines, but **electric generating efficiency** (both full- and part-load) will be higher with regenerative open cycles. As with steam turbines, the efficiency of open-cycle combustion turbines tends to increase with size up to about 30 MW, and remains relatively constant in larger systems.

R&D on advanced combustion turbine cogenerators focuses on systems that operate at higher turbine inlet temperatures in order to improve operating efficiency, and on systems that can accommodate a wider range of fuels. The primary R&D considerations are:

- improved cooling of turbine blades,
- changes in turbine blade materials (possibly to temperature resistant ceramic coatings) to withstand higher inlet temperatures, and
- changes in turbine blade materials to improve their anticorrosive properties in order to allow the use of alternate fuels.

The **installed costs** for open-cycle combustion turbine cogenerators are shown in figure 21, broken down by the cost of the prime mover versus that for the total system. As can be seen in this figure, total system installed costs range from $320/kW installed capacity for very large (100-MW) gas turbine cogenerators, to over $700/kW for very small units. Economies of scale are apparent in systems larger than about 20 to 30 MW. In general, regenerative-cycle combustion turbines cost about $15 to $100/kW more than simple cycles.

Estimated **variable O&M costs** for combustion turbines are 2.5 mills/kWh. Operating expenses for advanced combustion turbines probably will be slightly higher—perhaps 2.8 to 3.0 mills/kWh depending on the fuel used. Annual **fixed O&M costs** for combustion turbine topping cycles are

Figure 21.—Combustion Turbine Cogenerator Cost Estimates for the Prime Mover and Total Installed System

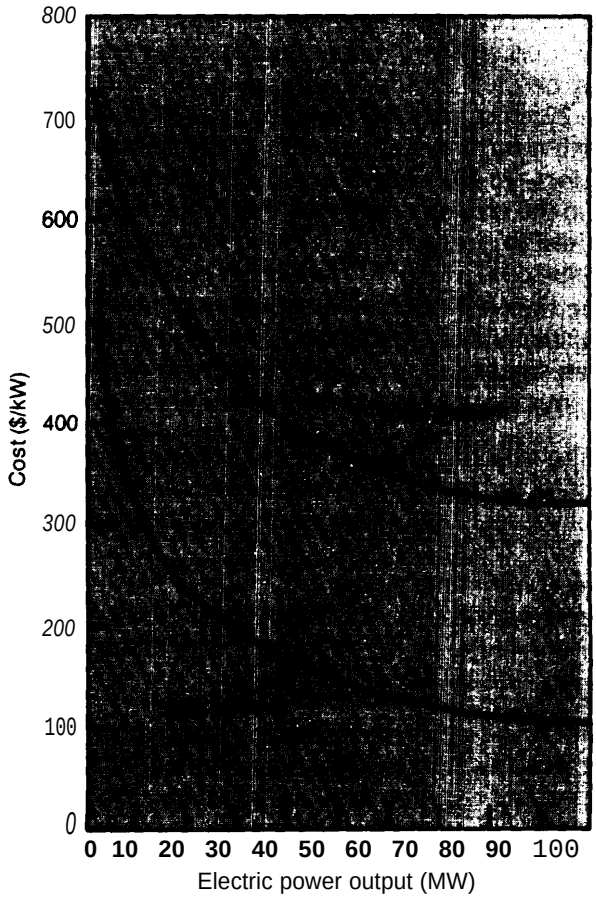

SOURCE: Office of Technology Assessment.

low and tend to be about $0.29/kW for simple cycles and $0.34/kW for regenerative cycles.

Closed-Cycle Combustion Turbines

In closed-cycle combustion turbine systems, the working fluid (usually either helium or air) circulates through a closed circuit, and is heated to the required inlet temperature by a heat exchanger. This arrangement ensures that both the working fluid and the turbine machinery are isolated from both the combustion chamber (heat source) and the products of combustion, and thus erosion and corrosion problems in the turbine are avoided. This external combustion design

thus permits greater fuel flexibility than is possible in currently available open-cycle turbines. Closed-cycle systems can burn coal, industrial or municipal wastes, biomass, or liquid or gaseous fuels derived from them. Nuclear or solar energy may be used for these systems in the future. Figure 22 presents schematics of closed-cycle combustion turbine systems with and without regenerators. In the regenerative closed cycle, heat from the working fluid that is leaving the turbine is used to preheat the working fluid that is leaving the compressor. Closed-cycle combustion turbine cogenerators have not been commercially available in the United States in the past, but have been successful in Europe and Japan and could be introduced here at any time.

The actual configuration of closed-cycle combustion turbine systems will vary according to the heat source. Likely heat sources for these systems include coal-fired AFB combustors and liquid-fueled high-temperature furnaces. The installation leadtime for a 25-MW system with an AFB is estimated to be 4.5 to 5 years, with an expected service life of about 20 years.

In closed-cycle systems, any gas can serve as the working fluid. Air has the advantage of reducing sealing requirements and mechanical complications. Heavy molecular weight gases (such as argon) reduce the size of the turbomachinery but increase that of the heat transfer components, while light molecular weight gases (such as helium) require more extensive turbomachinery and minimize the size of heat transfer equipment. This flexibility' contrasts sharply with open-cycle combustion turbine systems, which are limited to the hot combustion gases as the working fluid.

Closed-cycle combustion turbines are thus physically smaller than open cycles, but require more piping and heat exchangers. In addition, the small physical size of the turbomachinery limits the power of closed-cycle turbines. Consequently, systems with capacities below 500 kW are not considered economically attractive. Electric capacity in currently operating closed-cycle gas turbine systems (in Europe and japan) ranges from 2 to 50 MW.

The average annual reliability and availability of closed-cycle combustion turbines is expected to be at least as good as that for open cycles once sufficient operating experience has been accumulated with the former. However, because the closed-cycle configuration reduces wear and tear on the turbine blades, closed-cycle systems may require less maintenance (and thus have a higher availability) than open cycles.

The overall fuel efficiency of closed-cycle combustion turbine cogenerators also is expected to be comparable to that of open cycles, as is the

Figure 22.—Closed-Cycle Gas Turbines With and Without Regeneration

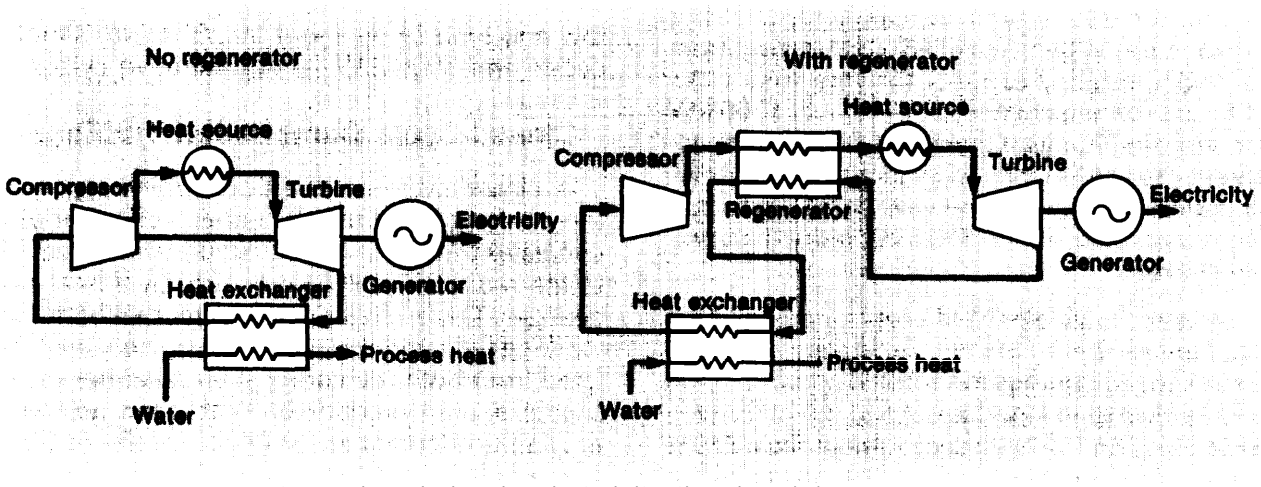

SOURCE: United Technologies Corp., *Cogeneration Technology Alternative Study (CTAS)— Volumes /-V/* (Cleveland, Ohio: National Aeronautics and Space Administration, Lewis Research Center, and Washington, D. C.: U.S. Department of Energy, DOE/NASA/OOW-8011 -6, January 1960).

E/S ratio (see table 23). Similarly, use of a regenerator with a closed cycle will increase electricity output but reduce the temperature of the recovered heat. Unlike open-cycle systems, however, part-load operation of a closed-cycle gas turbine cogenerator does not reduce electric generating efficiency, and may actually increase it when a regenerator is used. In this case a closed-cycle system is much like a steam turbine in that the working fluid and the combustion gases are separate. This allows more control, which in turn makes possible more constant part-load operation. The effect of part-load operation on overall fuel efficiency will depend on the part-load efficiency of the heat source (e.g., fluidized bed, hot gas furnace). Finally, overall efficiency will tend to increase slightly with system size up to about 25 MVV.

Detailed installed cost information for closed-cycle combustion turbine cogenerators is limited due to the lack of experience with these systems in the United States. Figure 23 presents estimates for various size systems showing a range for total installed costs (exclusive of heat source) from $450 to $900/kW. Economies of scale are significant for larger systems (approximately 25 MW and above), primarily as a result of the low incremental cost of fuel handling equipment with increasing capacity.

Figure 23.—Closed-Cycle Gas Turbine Cogenerator Installed Cost (exclusive of heat source)

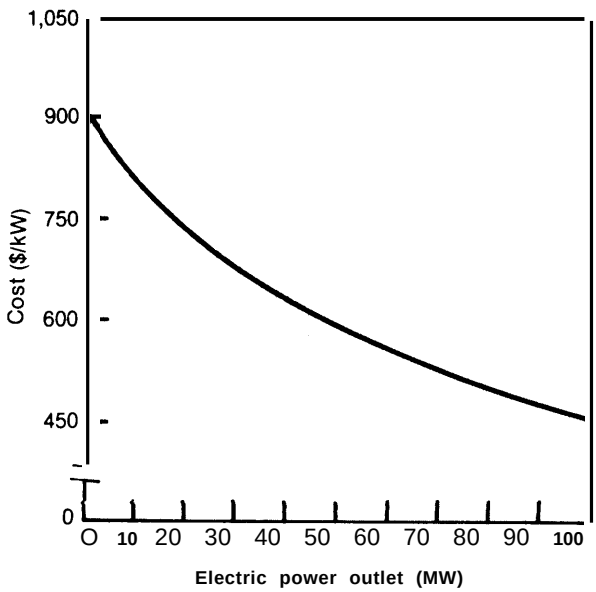

SOURCE: Off Ice of Technology Assessment

The lack of U.S. operating experience with closed-cycle combustion turbine cogenerators precludes any definitive estimate of O&M costs. A representative estimate for fixed plus variable O&M costs in the literature surveyed is 5 percent of installed cost per year of operation.

Combined Cycles

The term "combined cycle" is applied to systems with two interconnected cycles operating at different temperatures. The higher temperature (topping) cycle rejects heat that is recovered and used in the lower temperature (bottoming) cycle to produce additional power and improve overall conversion efficiency. Currently available combined-cycle cogenerators use a combustion turbine topping cycle in combination with a steam-bottoming cycle.

A schematic of such a combined-cycle plant is shown in figure 24. The major components of the system are the combustion turbine generator, the heat recovery boiler, and the steam turbine. Note that this system is like the combustion turbine cogeneration systems discussed previously except that steam from the heat recovery boiler is used first to generate electricity and then exhausted for process heat and ultimately waste heat. In most combined-cycle systems, extra fuel is burned in the heat recovery boiler to supplement the heat in the combustion turbine exhaust, The high percentage of oxygen (17 percent) in the combustion turbine's exhaust guarantees efficient supplemental combustion under the heat recovery boiler. Supplemental firing generally improves thermal efficiency at part-load operation, but makes combined-cycle plant operation control more complex and thus increases maintenance costs.

Combined-cycle cogenerators typically are available in sizes ranging from 22 to about 400 MW. However, smaller units have been installed, and at least one company currently is developing small, prepackaged combined-cycle units in the 4-to 11 -MW size range (50). Installation time from the date the equipment is ordered ranges

Figure 24.—Schematic of a Combined-Cycle Cogenerator

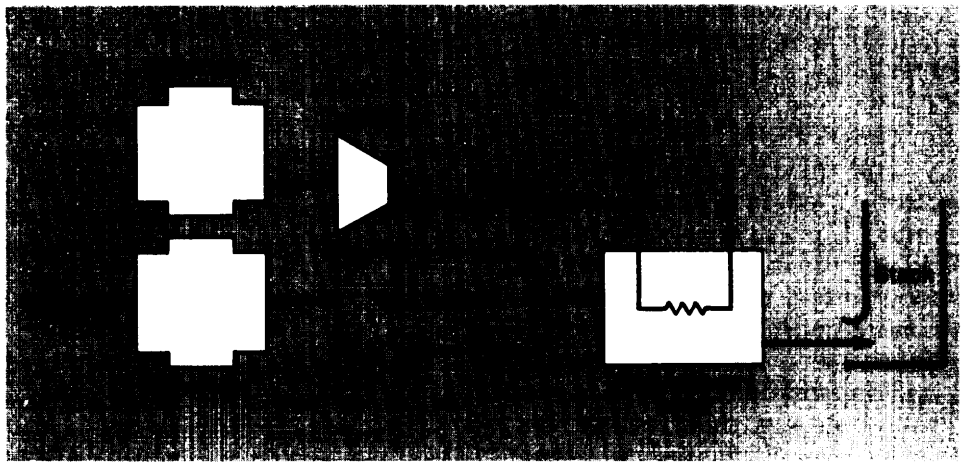

SOURCE: United Technologies Corp., *Cogeneratlon Technology Alternat/ve Study (CTAS)– Volume I-VI* (Cleveland, Ohio: National Aeronautics and Space Administration, Lewis Research Center, and Washington, D. C.: US. Department of Energy, DOE/NASA/0030-'60H -6, January 1980).

from 2 to 3 years. It is generally possible to have a two-stage installation in which the combustion turbine system can be operable within 12 to 18 months. The steam turbine can then be installed while the combustion turbines are in operation.

Combined-cycle systems require less floor space than separate combustion or steam turbines producing comparable amounts of electric power. Advanced combined-cycle systems (which will consist of advanced combustion turbines and current technology steam turbines) will be even smaller. Reduced space requirements should increase the potential cogeneration applications for combined-cycle systems.

Fuels employed by available combined-cycle cogenerators are the same as those used by commercial combustion turbines—natural gas, light distillate oil, and other fuels that are free from contaminants. Heavy fuels, such as residual oil, heavy distillates, and coal-derived fuels that are contaminated with trace metals can be used but must be cleaned first. Advanced combined-cycle systems will be able to incorporate fluidized bed combustors that can burn coal (or almost any other fuel). Systems utilizing indirect firing and heat exchangers (i.e., closed cycles) also will be able to run on a wider variety of fuels, because the combustion turbine blades will be isolated from the corrosive influence of fuel combustion.

The maintenance requirements for a combined-cycle system are similar to those for the separate turbines, and average annual availability is lower than for either technology alone (77 to 85 percent). Reliability is around 80 to 85 percent. Economic service life is between 15 and 25 years. However, as with open-cycle combustion turbines, poor maintenance, lower quality fuels, and intermittent operation will decrease the availability, reliability, and service life.

The electric generating efficiency of combined-cycle cogenerators is greater than for simple combustion turbine systems because of the additional electricity generated by the steam turbine. Current combined-cycle systems achieve electric generating efficiencies of between 34 and 40 percent, with 37 percent being typical. This increased efficiency, however, is achieved at the expense of total fuel use (additional fuel is used for supplemental heating of the heat recovery boiler). While available combustion turbines equipped with waste heat boilers typically have a fuel use efficiency of approximately 80 percent, overall fuel efficiency for combined-cycle systems usually is below 60 percent. The electric conver-

sion efficiency of combined cycles increases with capacity up to around 80 MW and remains constant above that size.

As with open-cycle combustion turbines, part-load operation reduces the efficiency of combined cycles. As the gas turbine's generating efficiency drops, more waste heat is supplied to the steam turbine and its percentage of electric load increases. However, the overall efficiency declines because of the increasing amount of waste heat from part-load operation that cannot be recovered.

Typical E/S ratios for combined cycles are 175 to 320 kWh/MMBtu—significantly higher than those for steam turbine topping cycles, and comparable to or slightly higher than open-cycle combustion turbines. However, as mentioned above, as E/S ratio in a combined-cycle system increases the overall fuel efficiency decreases.

Figure 25 presents estimates of total system installed costs for combined cycles. These costs range from approximately $800/kW for a 4-MW unit down to approximately $430/kW for 100-MW units, Combustion turbines represent a larger percentage of the prime mover installed costs than do the steam turbines in these systems.

Figure 25.—Total Installed Costs for Combined-Cycle Cogenerator Systems

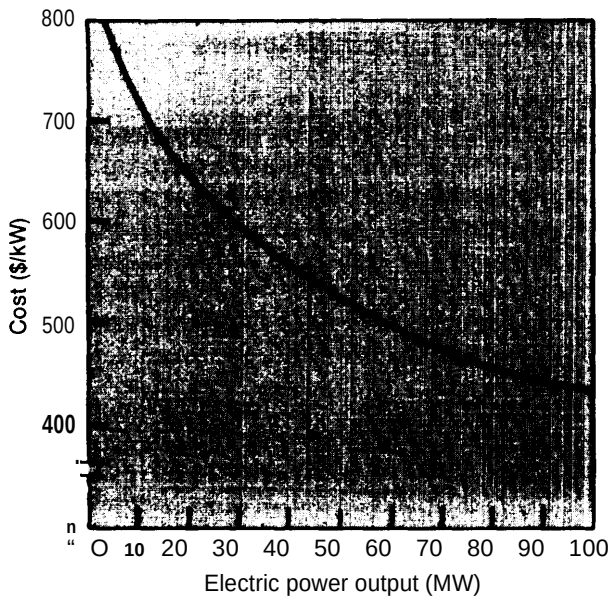

SOURCE: Office of Technology Assessment.

Maintenance costs for the combined-cycle system are directly related to the type of fuel used. The lowest maintenance costs are associated with natural gas use, while using residual oil in the combustion turbine will result in the highest maintenance costs, primarily because of the necessity to clean the fuel. Variable O&M cost estimates for combined-cycle systems range from 3.0 to 5.1 mills/kWh while annual fixed O&M costs are from $5.0 to $5.5/kW installed capacity.

Diesels

The diesel engine is a reciprocating internal combustion engine and is a fully developed and mature technology. Cogeneration systems using diesel engines are topping systems and are classified according to whether the diesel engine operates at high, medium, or low speed. Table 24 summarizes the engine speeds for each type of diesel, its capacity range, and its usual applications. All three types have been used in electric power generation—medium- and low-speed diesels by electric utilities for intermediate and peak-load use, and high-speed diesels in the "total energy systems" of the past.

A typical diesel engine topping cogenerator is shown in figure 26. The major system components include an engine, generator, heat recovery unit, fuel handling equipment, and environmental controls. The engine is cooled with water and the heated water used for process steam, heat, or hot water applications. Exhaust gases can be used in a similar manner.

Diesels usually burn natural gas, distillate oil, or treated residual oil, and often have dual fuel

Table 24.-Diesel Engine Characteristics

Type	RPM	Capacity (MW)	Uses
High speed	1,200-3,600	0.075-1.5	Smaller vehicles
Medium speed. .	500-1,200	0.5-10	Marine, rail
Low speed	120-160	2-30	Marine propulsion and industrial use

SOURCES: Office of Technology Assessment from Peter G. Bos and James H Williams, "Cogeneration's Future in the Chemical Process Industries (CPI)," *Chemical Engineering,* Feb. 26, 1979, pp. 104-110; "Electric Power Generation," *McGraw-H/l/ Yearbook of Science and Technology* (New *York:* McGraw-Hill Book Co., 1980); Joel Fagenbaum, "Cogeneration: An Energy Saver," *IEEE Spectrum,* August 1980, pp 30-34; and Alan J. Streb, "Cogeneration—What's Ahead?" *Energy Engineering,* April/May 1980, pp. 11.23.

Figure 26.—Diesel Engine Cogenerator

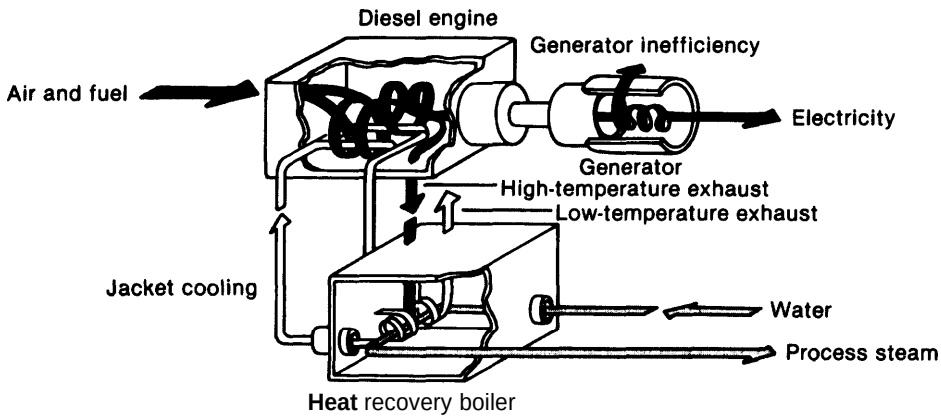

SOURCE: Resource Planning Associates, *Cogeneration: Technical Concepts, Trends, Prospects* (Washington, D. C.: U.S. Department of Energy, DOE-FFU-1703, September 1978).

capability. Two-stroke low-speed diesels also can burn untreated low grade residual oil (58). Research is underway on the use of coal-based fuels in large (low-speed) diesels, including processed solid or liquid coal-derived fuels, or direct coal firing with either a coal/oil or coal/water slurry medium or a dry powdered coal. Slurry-fired diesels may become operational in 5 to 6 years and commercially available in 8 to 10 years. However, additional equipment may be required to control the increased particulate and sulfur dioxide emissions resulting from burning coal or coal-derived fuels. Whether coal burning diesels will be economically competitive is yet unknown.

R&D on diesels also is directed toward increasing the temperature of the cooling water so that steam can be generated, and toward higher supercharge capability and higher charge air cooling. Such advances could result in a 50-percent increase in power output per cylinder (23). Advanced diesels will be ready for wide-scale cogeneration application between 1985 or 1990. "Adiabatic" (or very low heat loss) diesels, which use ceramic parts, also are under development. The principal advantage of the adiabatic diesel would be that all the waste heat would be in the exhaust stream and would be available at high temperature (as with combustion turbines). This technology could significantly improve the versatility of the diesel as well as lead to greater overall fuel use efficiency (61), but is not expected to be commercially available until after 1990.

Installation leadtimes for presently available diesel cogenerators range from 9 months for smaller high-speed systems to 2.5 years for larger low-speed units. Maintenance is performed on typical low- and medium-speed diesels every 1,500 hours, and more frequently on high-speed diesels. Average annual availability ranges from 80 to 90 percent. Expected service lifetimes vary from 15 to 25 years depending on unit size, fuel burned, and quality of maintenance.

E/S ratios for diesels are high–from 350 to 700 kWh/MMBtu. Low-speed diesels typically are designed for peak efficiency at 75 percent of full load. Part-load performance for current and advanced technology high-speed diesels is excellent. Medium-speed diesels, whose rated capacities overlap high-speed diesels at the small scale and low-speed diesels at the large scale (see table 24) follow the same trends.

Total installed costs for current and advanced diesel prime movers are given in figure 27. Costs range from $350 to $800/kW for current units, with large advanced systems being slightly higher and smaller ones significantly higher.

Estimates for O&M costs for current and advanced diesels vary significantly depending on

Figure 27.— Diesel Cogenerator Total Installed Costs for Current and 'Advanced Prime Movers

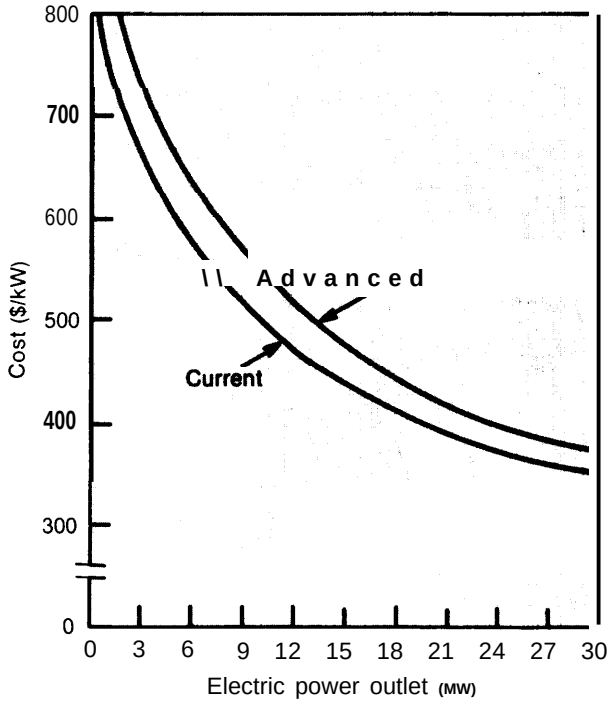

SOURCE: Office of Technology Assessment.

the fuel, the unit's size, and the level of emission control. Fixed O&M costs vary from $6.0 to $8.0/kW annually. Estimates for variable O&M costs range from 1.5 mills/kWh for large low-speed units to 16 mills/kWh for small high-speed units, with 5.0 to 10.0 mills/kWh being a common range.

Rankine Cycle Bottoming

All bottoming cogeneration systems are based on the conventional Rankine cycle (which is the same cycle used in steam turbine topping systems), and are classified according to whether they use steam or organic working fluids. The steam cycle (see fig. 28) uses steam produced in a heat recovery boiler to drive a steam turbine that generates electricity and high- and low-temperature waste heat. This, of course, is just the low-temperature end of the combined-cycle systems discussed before. The high-temperature heat is condensed and either used in process applications or fed back into the boiler through a closed loop. Low-temperature waste heat is lost to the surrounding environment. An organic Rankine cycle (see fig. 29) converts heat energy into mechanical energy by alternately evaporating an organic working fluid (such as toluene) at high pressure and using this vapor to produce shaft power by expanding it through a turbine. The vapor is then recondensed for either process use or reinfection into the heat recovery boiler. Organic working fluids are used when only lower temperature heat sources (200° to 600° F) are available because these fluids vaporize at very low temperatures.

Figure 28.—Steam Rankine Bottoming Cycle

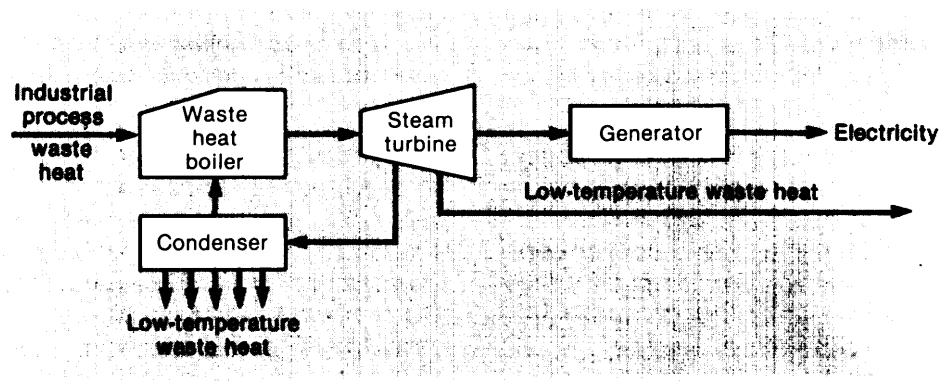

SOURCE: Thermo Electron Corp., *Venture Analysis Case Study—Steam Rankine Recovery Cycle Producing Electric Power From Waste Heat* (Waltham, Mass.: Thermo Electron Crop,, TE4231-1 17-78, December 1978).

Figure 29.-Organic Rankine Bottoming Cycle

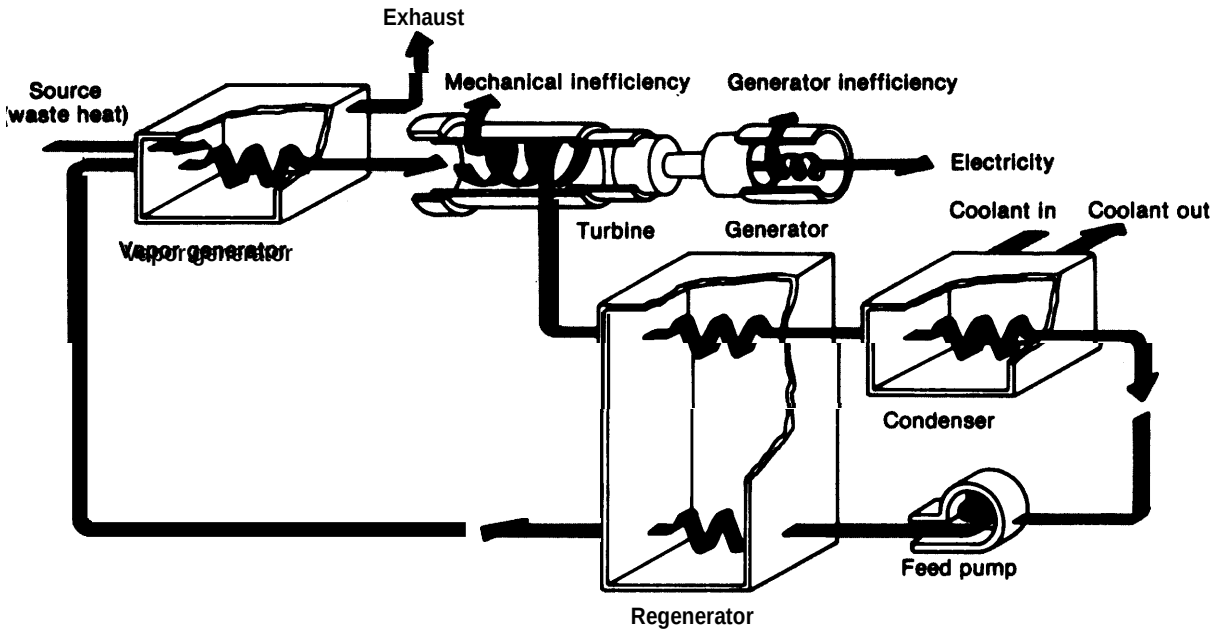

SOURCE: Reeource Planning Aesociates, ***Cogeneration:*** *Technical Concepts Trends, Prospects* (Waehlngton, D. C.: U.S. Department of Energy, DOE-FFU-1703, September 1978).

Rankine cycle engines have several characteristics that make them particularly appealing to dispersed electricity generating systems. They are one of the few engines that can effectively utilize heat at temperatures in the 200° to 600° F range. This allows the engines to use a variety of heat sources including solar energy, industrial waste heat streams, geothermal energy, and hot engine exhausts. Rankine engines also can be designed for use over a wide range of capacity levels, from as low as 2 kW for onsite solar applications up to 10 MW for waste heat applications.

The installation time required for organic and steam bottoming cycles generally depends on the size of the plant. For steam Rankine engines, installation times will be similar to those for comparably sized steam turbine topping cycles. Very small organic Rankine units (less than 50 kW), particularly those in commercial applications, will require minimal installation time (4 to 8 months) (2), while larger units are expected to take 1 to 2 years.

Maintenance requirements and reliability for the steam Rankine bottoming cycle also should be comparable to those of steam turbine topping systems (i.e., average annual availability of about 90 percent). Organic Rankine bottoming cycles are a relatively new technology, and information on maintenance schedules and system reliability is not readily available for these systems, but developers of this technology expect availability to be from 80 to 90 percent. Expected service lifetime for both types of bottoming cycles is around 20 years.

Figure 30 shows organic Rankine cycle efficiency as a function of boiler outlet temperature. Note that operation for inlet temperatures below 150° F (about 75°C) is possible. Depending on these parameters, cycle efficiency will range from 5 to 30 percent, with 10 to 20 percent being representative of actual operating conditions. However, because these organic Rankine cycle systems are bottoming systems that operate on the waste heat these efficiencies are not significant

Figure 30.—Organic Rankine Bottoming Cycle Efficiency—Variation With Peak Cycle Temperature

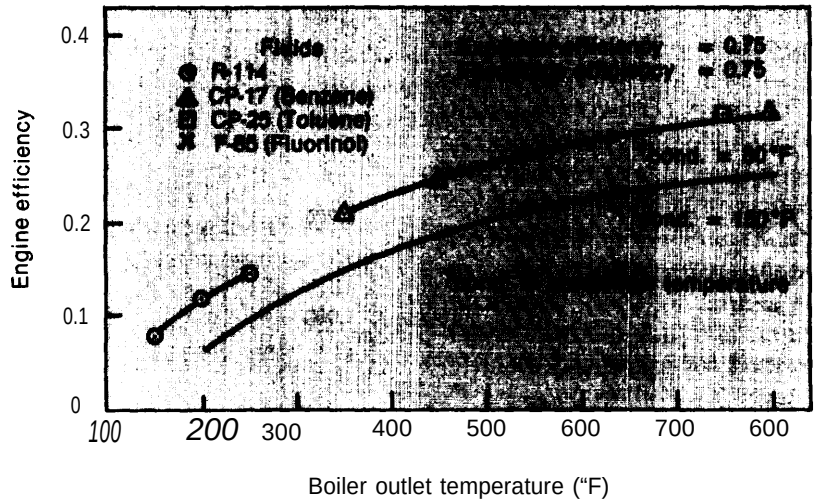

SOURCE: Resource Planning Associates, *Cogeneratlorr: Technical Concepts, Trends, Prospects* (Washington, D. C.: U.S. Department of Energy, DOE/FFU-1703, September 1978).

as far as total fuel use is concerned, because the addition of an organic Rankine bottoming cycle will increase the power output of the system without any increase in fuel consumption.

An analogous situation holds true for steam Rankine bottoming cycles. Figure 31 indicates typical energy balances for both condensing and noncondensing steam Rankine systems. Although

Figure 31.—Typical Energy Balances for Steam Rankine Bottoming Systems

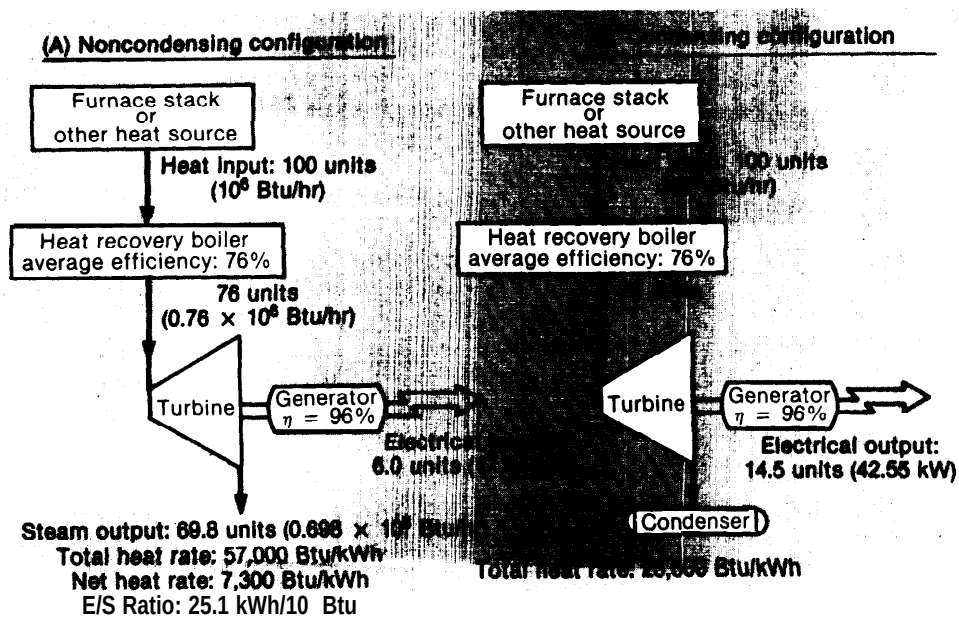

SOURCE: Thermo Electron Corp., Venture *Analysis Case Study—Steam Rankine Recovery Cycle Producing Electric Power From Waste Heat* (Waltham, Maas.: Thermo Electron Corp., TE4231-117-78, December 1978).

figure 31 shows an electric generating efficiency of only 6 percent for the condensing configuration and 14. s percent for the noncondensing, it must be remembered that additional electricity is being generated from heat that normally would have been wasted. Therefore, both configurations will result in substantial fuel savings. Because the noncondensing system produces steam as well as electricity, and hence has a higher overall fuel utilization efficiency, it saves about 150 percent more fuel than the condensing system. The noncondensing system would be used, therefore, when heat requirements and fuel saving considerations override the need for increased electricity production.

Figures 32 and 33 present estimated installed costs for condensing and noncondensing steam Rankine bottoming systems and for organic systems. The costs of the steam systems are roughly comparable to steam topping cycle cogenerators because most of the components are the same for both types of systems. Installed costs for organic Rankine cycles are more uncertain because mass production of the units has not yet begun. However, available estimates suggest that the organic Rankine cycles will have a higher installed cost than steam cycles, primarily due to the special materials (e.g., stainless steel) needed to prevent corrosion of system components and the precautions that must be taken against leaks of the organic working fluid.

Figure 32.—Estimated installed Costs for Condensing and Noncondensing Steam Rankine Bottoming Systems

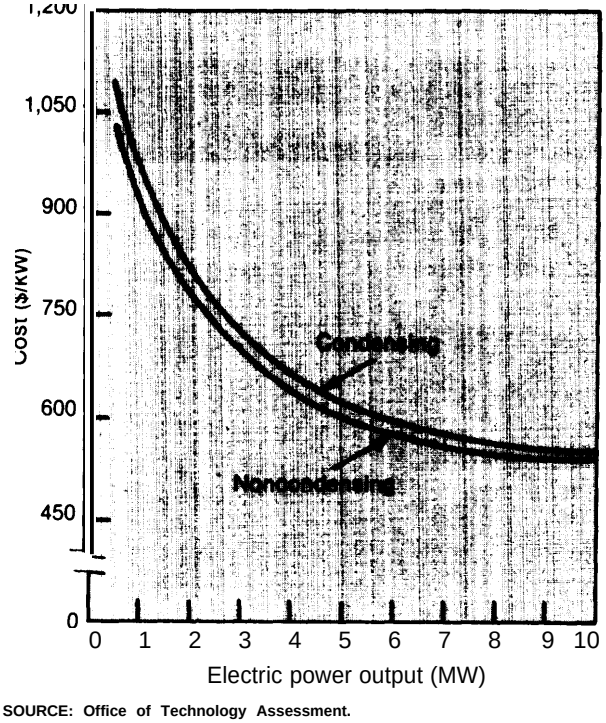

SOURCE: Office of Technology Assessment.

Figure 33.—Estimated Installed Costs for Oraganic Rankine Bottoming System

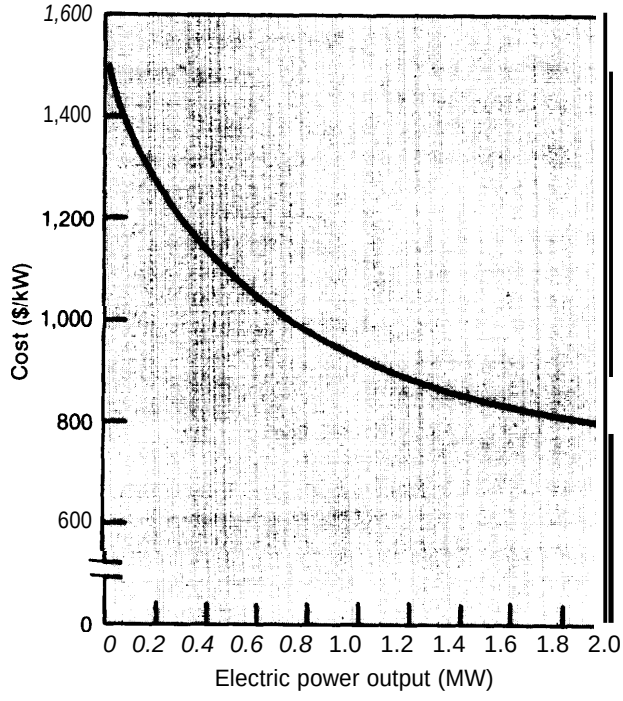

SOURCE: Office of Technology Assessment.

Estimates of variable O&M costs for condensing and noncondensing steam bottoming systems up to 3 MW are presented in table 25. For larger units, variable O&M costs are estimated to be be-

Table 25.-Estimates of Steam Bottoming Cycle Operation and Maintenance Costs

Condensing		Noncondensing	
MW	Mills/kWh	MW	Mills/kWh
0.5	6.86	0.5	6.17
1.0	4.57	1.0	5.03
1.5	4.17	1.5	4.17
2.0	3.87	2.0	3.71
3.0	3.71	3.0	3.71

SOURCE: Thermo Electron Corp., *Venture Analysis Case Study—Steam Rankine Recovery Cycle Producing Electric Power From Waste Heat* (Waltham, Mass.: Thermo Electron Corp., TE4231-117-78, December 1978).

tween 3 and 5 percent of the installed cost. Annual fixed O&M costs are approximately $1 .60/kw of installed capacity.

Fuel Cells

A fuel cell is an electrochemical device that converts the chemical energy of a fuel into electricity with no intermediate combustion cycle (see fig. 34). Hydrogen and oxygen react to produce water in the presence of an electrolyte and, in doing so, generate an electrochemical potential that drives a current through an external circuit. In addition, the reaction produces waste heat. The hydrogen required for the ceil is obtained from fossil fuels, usually methane, CH_4. Because methane occurs naturally only in natural gas, fuel conversion is necessary if coal or biomass are the ultimate sources of the hydrogen. Fuel cells may be attractive for industrial and commercial cogeneration or for utility peaking applications because of their modular construction, good electric load following capabilities without a loss in efficiency, automatic startup and shutdown, low pollutant emissions, and quiet operation. An individual fuel cell has an electric potential of slightly less than 1 volt (determined by the electrochemical potential of the hydrogen and oxygen reaction), but single cells can be assembled in series to generate practically any desired voltage, and these assemblies, in turn, can be connected in parallel to provide a variety of power levels (e.g., 40 kW to 25 MW). A fuel cell powerplant (see fig. 35) includes the cell stack, an inverter (to convert direct current to alternating current), and a fuel processor (to remove impurities from the hydrocarbon fuel and convert it to pure hydrogen). The recovered thermal energy in a fuel cell cogenerator can be either all hot water, or part steam and part hot water depending on the pressure.

The only fuel cell technology currently operating commercially is based on a phosphoric acid electrolyte operating at 350° F. In general, acid systems are favored because they do not react with carbon dioxide and may thus use air as the source of oxygen. Phosphoric acid cells are preferred because water removal is relatively easy to control in these systems. However, phosphoric acid fuel cells depend on platinum catalysts. The present demonstration fuel cell powerplants require a platinum catalyst loading of approximately 6.2 grams per kilowatt of electric power output (27), which, at today's prices, adds $65 to $75/kW to the cost of the fuel cell. A production level of 750 to 1,000 MW of phosphoric acid fuel cells per year (the level one developer suggests will be achieved in the next 10 to 15 years) would

Figure 34.—Schematic Diagram of a Fuel Cell

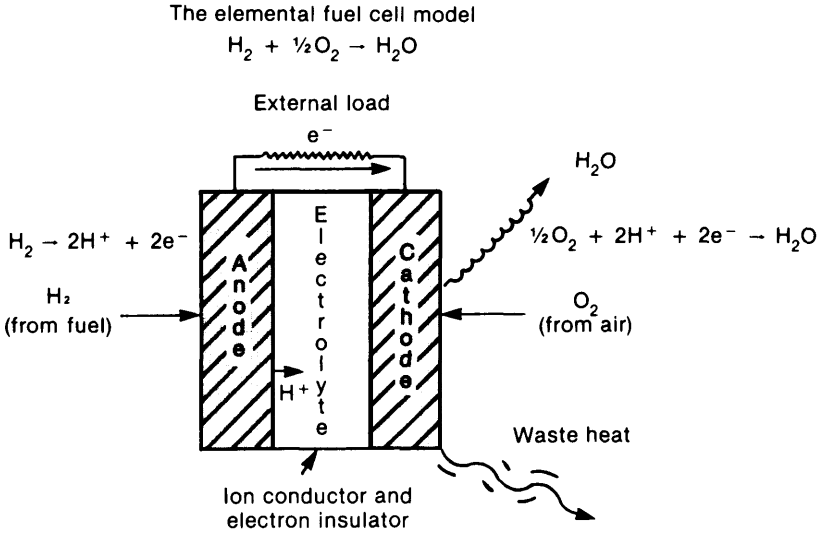

SOURCE: Mathtech, Inc., *An Analysis of the Application of Fuel Cells in Dual Energy Use Systems, Volumes I and II* (Palo Alto, Calif.: Electric Power Research Institute, EM-981 and EM-981-SY, February 1979).

98-946 O - 83 - 10 : QL 3

Figure 35.—Schematic of a Fuel Cell Powerplant

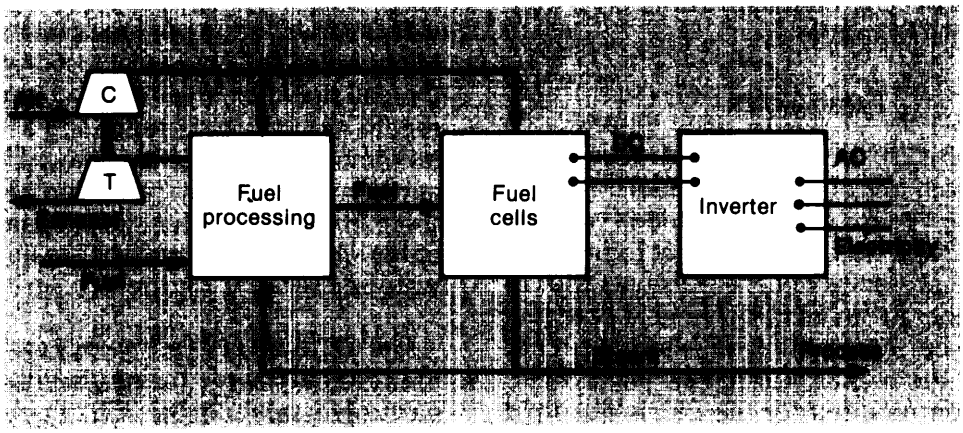

SOURCE: United Technologies Corp., *Cogeneration Technology Alternative Study (CTAS) – Volume VI* (Cleveland, Ohio: National Aeronautics and Space Administration, Lewis Research Center, and Washington, D. C.: U.S. Department of Energy, DOE/NASA/OO~OH-6, January 1980).

correspond to approximately 4.7 to 9.3 tonnes of platinum annually, or around 35 to 70 percent of domestic platinum production (including recycling) in 1979, and 3.5 to 7.5 percent of total U.S. consumption in 1979 (9). Because of the small amount of domestic platinum reserves, and limited U.S. refinery and recycling capacity, it is likely that a significant increase in platinum demand for fuel cells would be supplied from foreign sources—primarily South Africa and the U.S.S.R. —and could lead to increases in the price of platinum. R&D efforts are underway to reduce the platinum loading needed for fuel cells (developers estimate future requirements to be about 1.9 grams per kilowatt), to synthesize catalysts that do not depend on platinum, and to develop advanced cells based on molten salt electrolytes (9).

A second limitation of phosphoric acid fuel cells is that hydrogen is the only fuel that can be oxidized at acceptable power levels in the cell, and a clean fuel (e.g., methane or naphtha—a light petroleum distillate) is required to generate the hydrogen. Advanced phosphoric acid cells may be able to use desulfurized No. 2 fuel oil as the source of hydrogen. Second generation molten carbonate electrolyte fuel cells, using advanced fuel conversion technology, would make less stringent demands for a clean fuel, and possibly could be integrated with coal gasifiers.

Developers of fuel cells estimate an installation leadtime of 1 to 2 years for cogenerators based on either the phosphoric acid or molten carbonate cells (assuming mass production). useful service lives are projected to be 10 to 15 years. Maintenance requirements are uncertain due to the limited experience with demonstration plants, but average annual availability is expected to be around 90 percent.

The overall chemical reaction in a fuel cell defines the maximum electric energy that it can produce. Because no thermomechanical work is involved, the energy conversion efficiency is not limited by the Carnot cycle. However, voltage losses are associated with internal resistance, mass transport limitations, and the kinetics of the electrode reactions. Electric generating efficiency ranges from 30 to 40 percent, depending on operating temperature and fuel quality (see fig. 36). At half-load operation, electric generating efficiency equals or even exceeds the efficiency at full load. Thus, fuel cells could be installed for load following duty without a loss in efficiency in order to enable other types of generators to operate at their most efficient rates. E/S ratios for fuel cells are relatively high–from 240 to 300 kWh/MMBtu.

The installed costs for fuel cell powerplants are currently too high to compete with other elec-

Figure 36.-Representative Performance of Fuel Cell Powerplants

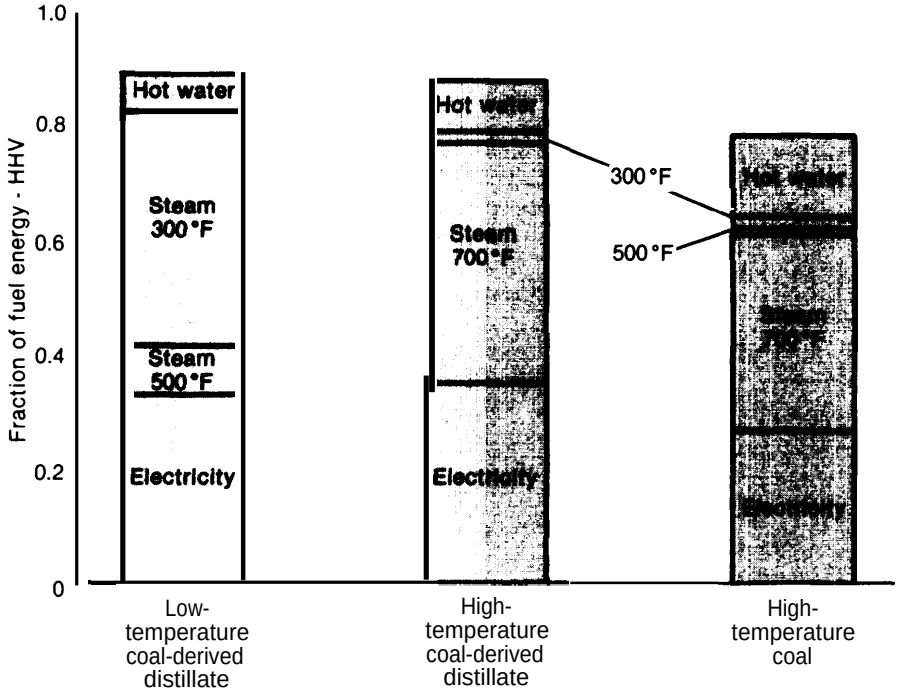

SOURCE: United Technologies Corp., *Cogeneration Technology Alternative Study (CTAS)— Volumes I-VI* (Cleveland, Ohio: National Aeronautics and Space Administration, Lewis Research Center, and Washington, D. C.: U.S. Department of Energy, DOE/NASA/0030-80/1-6, January 1930).

tric power generating systems (e.g., a 4.8-MW demonstration plant, being built in New York City, will cost $60 million, or an equivalent of $12,500/kW).” Fuel cell developers project that total installed costs should range from $520 to $840/kW of electrical capacity once the technology is being produced on a large scale (see fig. 37). It is likely that between 500 and 1,500 MW of fuel cells will have to be produced before the “learning curve” price reaches a target level of $350/kW for the fuel cell prime mover alone. As shown in figure 37, the cost of a fuel cell prime mover is not affected significantly by the capacity rating. However, substantial economies of scale are observed with the balance-of-plant costs per kilowatt, including fuel handling costs and electric and control system costs.

Estimates of variable O&M costs for both types of fuel cells fall within the range of 1.0 to 3.0 mills/kWh. Fixed annual O&M expenses may range from $0.26 to $3.3/kW installed capacity,

Stirling Engines

Stirling engines are a potentially advantageous alternative to diesel, combustion turbine, and steam turbine cogenerators due to their potentially higher thermal efficiency, greater fuel flexibility, good part-load characteristics, low emissions, and low noise and vibrations. Figure 38 shows a schematic of a Stirling cycle engine. Gas (e.g., hydrogen, helium) entrapped by a piston alternately is compressed and expanded to turn a crankshaft. Because the pressure during the hot expansion step is significantly greater than during the cool compression step, there is a net work output from the engine.

Historically, Stirling engines have been investigated for their potential use in automobiles, so developmental work has been directed toward smaller engines, which currently are available in a size range of 3 to 100 kw. A 350-kW Stirling **engine is under design, and developers expect**

Figure 37.– Future Estimates of Total Installed Costs for Fuel Cell Powerplant Systems

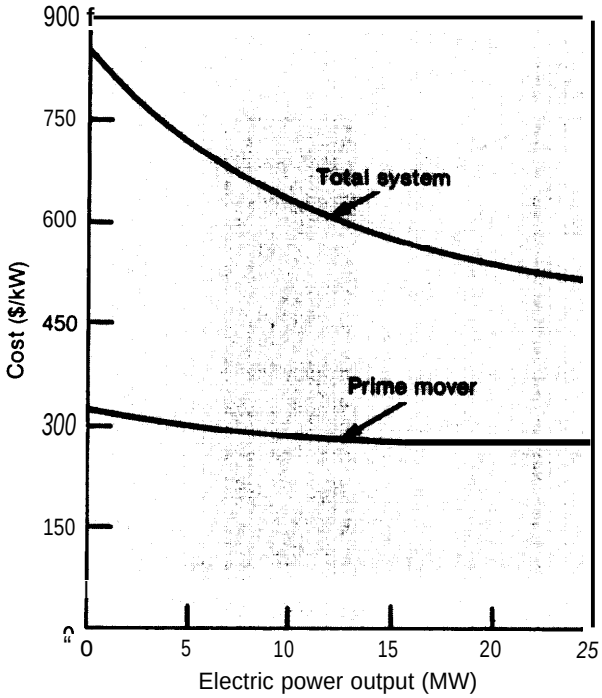

SOURCE: Office of Technology Assessment.

capacities **up to 1 to 1.5 MW, with service lifetimes of 20 years to be available by 1990. Although installation leadtimes are hard to predict at present, they could range from 2 to 5 years if and when Stirling cycle cogeneration systems become commercial.**

Because Stirling engines are still in the development stage, information about their maintenance and reliability is not readily available, but developers project maintenance requirements (and thus average annual availability) to be comparable to diesels and combustion turbines. Due to the external combustion, closed-cycle configuration of Stirling engines, its moving parts are not exposed to the products of combustion, and the wear and tear on the engine should be minimal. However, Stirling engines do require a complex system of piston rod seals and surface barriers to contain the high-pressure hydrogen and prevent oil from leaking into the working gas space. The durability of the piston seals, which are exposed to a pressure differential of several thousand pounds per square inch, is a recognized reliability

Figure 38.-Schematic of a Stirling Cycle Engine

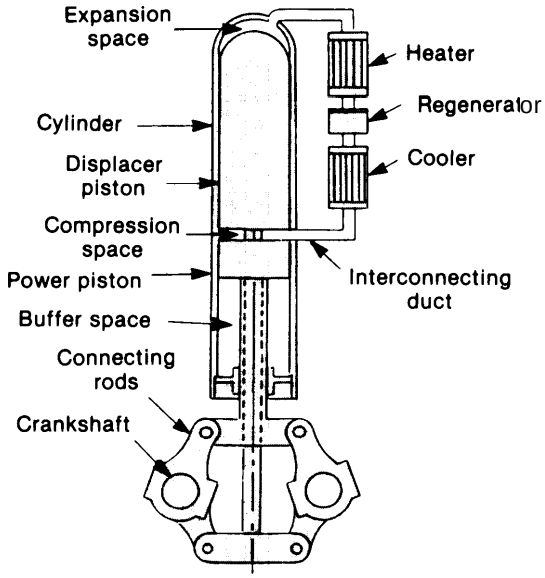

SOURCE: *Application of Solar Technology to Today's Energy Needs, Volurnes / and//* (Washington, D. C.: U.S. Congress, Office of Technology Assessment, 1978).

issue, and the seal systems must be improved before Stirling engines can be used widely.

A major advantage of the Stirling engine is that its external combustion system enables it to use a wide variety of fuels, including coal, coal-derived gases and liquids, municipal solid wastes, and possibly biomass-derived fuels such as wood chips and biogas. In addition, Stirling engines can change fuels without adjustment to the engine, interruption of its operation, or loss of either power or efficiency. This flexibility will allow Stirling engines to be used as components of solar energy systems, as adjuncts to fluidized bed combustors and nuclear reactor systems, etc.

A second advantage of Stirling engines, relative to available cogenerators, is their greater efficiency. The Stirling cycle is much closer to the Carnot cycle than are the Rankine or combustion turbine cycles, and Stirling engines have one of the lowest percentages of waste heat, and thus one of the highest overall fuel use fractions of any heat engine. Figure 39 shows how waste heat available from Stirling engines compares with waste heat from other engine types. The overall efficiency of Stirling engines is relatively independent of system size; electric generating efficiency and

Figure 39.—Waste Heat Availability From Different Engines

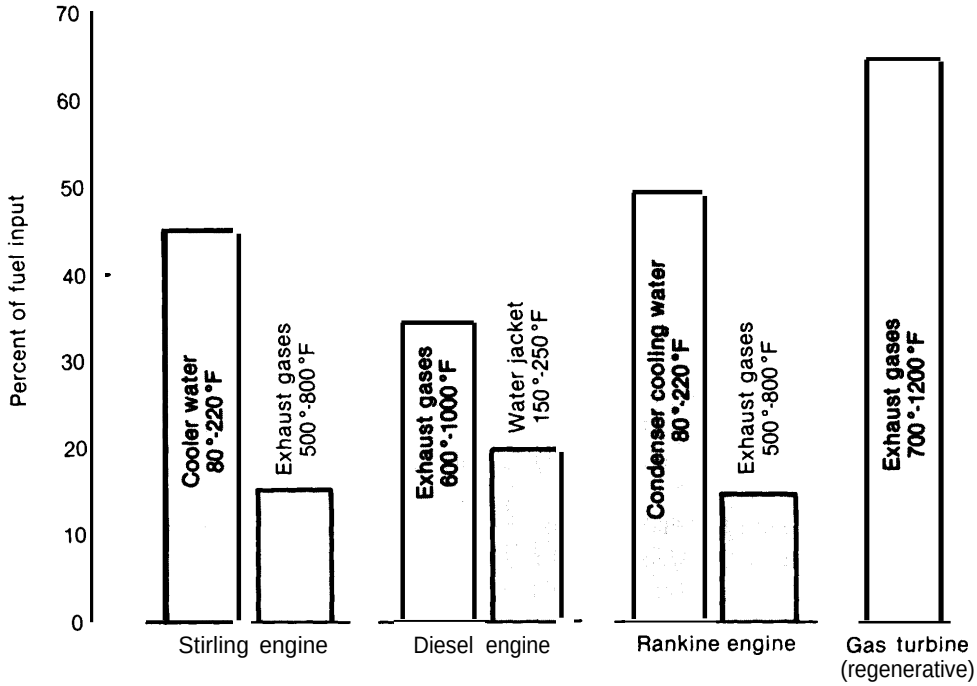

SOURCE: T. J. Marciniak, et al., An Assessment of *Stirling Engine Potential in Total and Integrated Energy Systems* (Argonne, Ill.: Argonne National Laboratory, ANL/EN-76, February 1979).

energy losses remain constant—all that changes is the composition of the waste heat (hot water and steam percentages) (55). Present full-load electric generating efficiency is similar to that of diesel cogenerators (35 to 40 percent). However, as development efforts increase the heat input temperature of Stirling cycles (e.g., through improved metals or ceramic coatings in the heater heads), efficiencies approaching so percent may be obtained over a wide output range (a few kilowatts to several megawatts). Part-load performance of current Stirling engines is equivalent to full-load efficiency, and thus is superior to that of available prime movers. E/S ratios also are very high–from 340 to 500 kWh/MMBtu.

It is difficult to give precise cost estimates for Stirling engines because they are not yet available commercially. Current installed cost estimates for large industrial Stirling engines are approximately 20 percent higher in cost than comparably sized diesel engines (from $420 to $960/kW; see fig. 40). As with fuel cells, successful development work and mass production would be required to

Figure 40.-Future Installed Costs for Stirling Engine Cogenerator Powerplants (extrapolated to 30-MW scale)

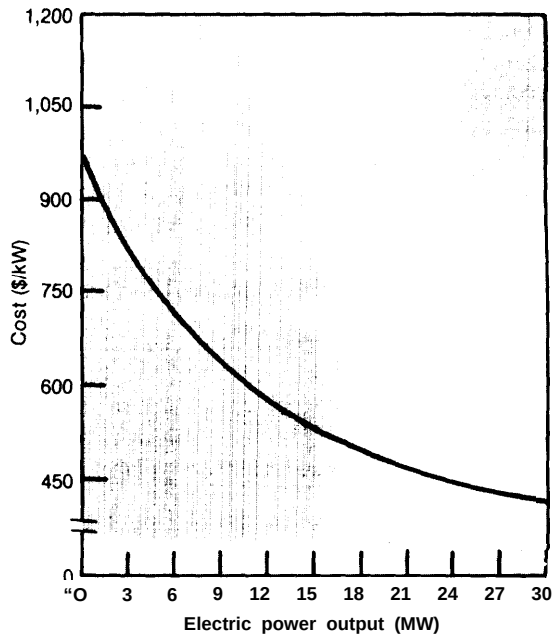

SOURCE: Office of Technology Assessment.

realize these costs. Thus, Stirling cycles could be competitive with other cogenerators if their engine efficiency reaches the target of 40 to 45 percent. Otherwise, installed costs would have to be reduced even further before Stirlings could be considered competitive.

Due to the limited operating experience with Stirling engines, no O&M cost data are available. A preliminary estimate of variable O&M costs is 8.0 mills/kWh (higher than for most prime movers) (2), while annual fixed O&M costs are estimated to be $5.O/kW.

USE OF ALTERNATIVE FUELS IN COGENERATION

Cogeneration's ability to reduce the use of premium fuels (oil and natural gas) depends on its fuel use flexibility. If cogenerators use nonpremium fuels (e.g., coal, synthesis gas, biomass, industrial or municipal waste) at the outset, or have the capability to switch readily to such fuels, their viability obviously will be enhanced. However, of the available cogeneration technologies described in this chapter, only steam turbines can burn nonpremium fuels directly. Although R&D efforts are underway to improve the fuel flexibility of other available cogenerators (e.g., advanced combustion turbines and diesels), these improvements may not become commercial until the late 1980's or early 1990's. Similarly, advanced prime movers (such as Stirling engines) that can use alternative fuels are not likely to be widely available for 5 to 10 years. As a result, many potential cogenerators are looking to alternative fuel combustion or conversion systems that can be used in conjunction with current cogeneration technologies to increase fuel flexibility. Two types of such systems—fluidized bed combustors and gasifiers–are discussed below. The use of these systems in industrial, commercial, and rural cogeneration applications is discussed in chapter 5.

Fluidized Bed Combustion Systems*

In fluidized bed combustion, coarse particles of fuel (about 1/4 inch in diameter) are burned in a bed of limestone or dolomite at temperatures of 1,500° to 1,750° F. The fuel and limestone (or other material) are injected into the bed through pipes that are arranged to distribute the fuel evenly throughout the bed area. Feeding is continuous to ensure steady combustion conditions. The fuel particles are kept in suspension and in turbulent motion by the upward flow of air, which is injected from the bed bottom and passed through a grid plate designed to distribute the air uniformly across the bed. During combustion, the system resembles a violently burning liquid and the bed of particles is considered to be "fluidized. " This fluidized state of the burning fuel produces extremely good heat transfer characteristics both among the agitated particles and in the heat transfer surfaces immersed in the bed. Residual materials are drained from the bed continually to allow for steady operating levels.

There are two major types of fluidized bed combustors. In atmospheric fluidized beds (AFBs), fuel combustion occurs at atmospheric pressures. In pressurized fluidized bed (PFB) systems, a pressurizing gas turbine elevates pressures in the combustion chamber to 10 to 15 atmospheres. The pressurized system allows a more compact boiler design and should produce fewer emissions than AFBs. However, development of the PFB is behind that of the AFB, and its availability will follow AFBs by several years.

AFBs are commercially available in sizes that produce from 50,000 to 550,000 lb of steam per hour, which corresponds to 5- to 55-MW electricity generating capacity (7). A 200-MW demonstration plant currently is under construction by the Tennessee Valley Authority (TVA), and is expected to come on-line by 1987. TVA estimates that a 800-to 1,000-MW plant could be built and

*Unless otherwise noted, the material in this section is from ICF, Inc. (26).

in operation by 1991. Because of the lack of construction and operating experience with fluidized beds beyond a 10-MW capacity, however, potential users currently are reluctant to install larger systems.

Only 10 PFB systems are either planned or in operation around the world, the largest being a 30-MW unit currently operating in Great Britain. No commercial vendor of pressurized systems has been identified, and, as mentioned previously, the availability of pressurized systems is expected to be several years behind that of atmospheric systems (7).

The space requirements for atmospheric and pressurized fluidized beds are drastically different. The pressurized combustion process allows for a more compact boiler design, which significantly reduces its space requirements. The area required for a PFB system is approximately one-fifth that of an AFB of equal thermal output capacity (23, 55). The smaller area occupied by PFBs will be particularly important for applications where space is limited or very expensive (e.g., in cities).

Fluidized beds can burn coal, wood, lignite, municipal solid waste, or biomass. The primary fuel used to generate electricity with fluidized beds is coal, and all fluidized bed plants currently in operation use coal as their fuel source. Large (800-Mw) fluidized bed plants are now being designed to use Illinois No. 6 coal, which has a relatively high sulfur content (around 4 percent). Fluidized bed boilers can burn such high sulfur coal without flue gas desulfurization because a large percentage of the sulfur (up to 90 percent) is trapped by the limestone particles within the fluidized bed. Flue gas from the fluidized beds flows through cyclone separators that remove 95 percent of the solid matter in the gas streams. Electrostatic precipitators remove the remaining ash to the level required by emission standards.

The ability to burn high sulfur coal economically represents an important advantage of fluidized bed boilers over the conventional coal combustion systems. However, fuel handling requirements for fluidized beds are more complex than they are for conventional coal boilers. Both the coal (or other fuel) and the limestone with which it burns must be pulverized to a size that can be fluidized easily. Moreover, present fluidized beds designed for a particular fuel will require substantial modification of the fuel handling and injection equipment to convert to another fuel. Advanced fluidized bed boilers may be designed so that they can accommodate different fuel types more easily.

Due to the lack of experience in the operation of fluidized bed boilers, information on their maintenance and reliability is limited. Developers expect the reliability of both fluidized bed types to be similar to that of a coal-fired boiler. However, as experience with fluidized bed technology increases, its maintenance requirements may become less stringent than those for current technologies.

R&D for fluidized bed boilers is directed towards overcoming the basic market barriers to their use. Current R&D focuses on: 1) installing larger demonstration plants; 2) determining the reliability, economic, and environmental characteristics of fluidized bed technology; and 3) demonstrating satisfactory erosion and corrosion behavior in the bed.

Gasification

Gasifiers convert solid fuels into a fuel gas, commonly known as synthesis gas, whose fuel components are principally carbon dioxide and hydrogen, with smaller quantities of various other substances. * The gasification process consists of heating or partially burning the solid fuel and, in some cases, reacting the gas or solid with steam. The resultant gas is a low- or medium-energy gas that contains less than about 500 Btu per standard cubic foot (SCF). This gas is not suitable for blending with natural gas (1,000 Btu/SCF), but it can be transported economically over relatively short distances (usually less than 100 miles) in regional pipelines and used for most of the applications for which natural gas is used (e.g., as a boiler fuel, for process heat, for cooking, for space and hot water heating, or as a combustion turbine fuel).

***The gas from air-blown gasifiers also contains considerable amounts of nitrogen from the air used in the process.**

This section analyzes the gasification of three solid fuels—coal, wood, and municipal solid waste—to produce a fuel for open-cycle combustion turbine and reciprocating internal combustion engine cogenerators. These solid fuels are analyzed because they are relatively abundant and are suitable for gasification. Combustion turbines and internal combustion engines are discussed because, of the commercially available cogeneration technologies, these currently have the least fuel flexibility, and because they require a relatively small investment for equipment (an important consideration for small, dispersed cogenerators). However, gasifiers also could be used in conjunction with larger systems such as steam turbines or combined cycles (see discussion of industrial cogeneration applications in ch. 5). Differences in the gases from each solid fuel are described first, followed by a consideration of the implications of these differences for combustion turbine and internal combustion engine cogeneration systems.

Coal

Coal can be partially burned with air to produce a low-energy gas (50 to 150 Btu/SCF) or with oxygen and steam to produce higher energy synthesis gas (300 to 400 Btu/SCF). As described below, the low-energy fuel gas is considerably less efficient as a gas turbine fuel than the synthesis gas, and it may be unsuitable as a fuel for internal combustion engines. However, a coal gasifier that produces synthesis gas requires an oxygen generator, which increases the system cost. Furthermore, both low- and medium-Btu gas from coal contains sulfur (hydrogen sulfide), ash, and other impurities that may have to be cleaned from the gas before it is used. Commercially available low-temperature gasifiers also produce a gas that contains some aromatic compounds and other relatively large compounds that can result in particulate when the gas is burned. High-temperature gasifiers are being demonstrated, and the technological obstacles to their production do not appear to be severe.

Wood

Wood has a relatively high oxygen content and can be gasified completely to synthesis gas (300 to 400 Btu/SCF) by heating it (pyrolysis) without the need for an oxygen plant. Pyrolysis usually requires a longer residence time in the gasifier than air-blown gasification, which increases pyrolysis equipment costs, but probably not enough to offset the savings from eliminating the oxygen plant. More rapid pyrolysis gasification is possible, but can result in the formation of considerable quantities of relatively large organic compounds in the gas that would tend to form particulate when burned. Wood gasification also can be accomplished with air being used to partially burn the wood. If properly controlled and designed, air-blown wood gasification can produce a fuel gas containing over 200 Btu/SCF.

Because wood contains sodium and potassium salts, the resultant fuel gas often contains these elements as impurities, which can damage or reduce the life of certain turbine blades. Thus, as with coal gas, wood gas may have to be cleaned before it is used.

Municipal Solid Waste

Municipai solid waste (MSW) contains large amounts of paper, plastic, metals, and other materials. The heavier materials can be separated economically from the paper in MSW, but most plastics cannot. Thus, for practical fuel purposes, MSW is a mixture of paper and plastic.

Like wood, MSW can be pyrolyzed to synthesis gas or partially burned to a lower energy gas in an air-blown gasifier. However, because much of the plastic in MSW contains chlorine (e.g., polychlorinated biphenyl plastics) the resultant fuel gas will contain hydrogen chloride (in aqueous form, muriatic or hydrochloric acid), which is extremely corrosive. Consequently, gasifiers and other equipment in contact with the gas must be constructed of expensive, acid resistant steel. Ceramic-coated metals that can be used in MSW gasifiers are under development. As a result of the problems introduced by plastics, MSW fuel gas currently is not economical. Furthermore, because paper is the only part of MSW that serves as a good gasifier feedstock, MSW gasification only partially solves waste disposal problems.

Combustion Turbines

As discussed in the previous section, reliable and efficient operation of open-cycle combustion turbines requires a high quality fuel that is relatively free of particulate and metallic impurities. None of the fuel gases described above fully satisfies these criteria. Coal gas contains sulfur and some heavy metal impurities, and low-temperature gasification of coal can produce a gas that is high in particulate when burned. Wood gas contains sodium and potassium and, in some cases, may produce particulate when burned. MSW has a much lower sodium and potassium content, but contains corrosive hydrogen chloride. If untreated, all of these fuels can damage commercially available turbines and reduce their useful life. Consequently, extra equipment is needed to purify these gases. The technical problems of turbine lifetime probably can be solved if ceramic coatings for turbine blades are successfully developed. However, environmental controls still would be required to prevent the release of heavy metals (from coal) and particulate (from all fuel types).

The energy content of the gas also can pose problems for combustion turbines. Low-energy gas (perhaps less than 150 to 200 Btu/SCF) can lower the efficiency of combustion turbines. Thus, wood and MSW gasifiers must be properly designed and operated to ensure that the energy content of the gas is greater than 200 Btu/SCF, while coal gasifiers will require oxygen plants to achieve a satisfactory energy content. Combustor design for medium-Btu gas (250 to 500 Btu/SCF) is well developed and use of this gas with gas turbines presents no efficiency problems (47,48).

Although fuel quality must be high in order to prevent damage to turbine blades in open-cycle combustion turbine operation, the use of solid fuels is not necessarily precluded. It is unlikely that coal will be able to be used in this way but recent developments indicate that pulverized wood can be made acceptable. The Aerospace Research Corp. in Roanoke, Va., is designing and building a 3-MW combined-cycle system using an open-cycle gas turbine fueled by pulverized wood (62). The wood is dried to a 25-percent moisture content, and the combustion gases are cleaned using hot gas cleanup technology developed in the British pressurized fluidized bed combustion program. Using these steps, it appears that unacceptable damage to the turbine blades can be avoided. A 17-MW system (also designed by Aerospace Research Corp.) operates at an inlet temperature of 980° C and an exhaust temperature of 510“ C.

While this system shows promise, its acceptance will depend on demonstrated reliability over an extended period. If it is necessary to remove the blades and repair or replace them more often than currently anticipated, the O&M costs could negate the potential economic benefits of using wood directly. Reliability also will depend on durable operation of the hot gas cleanup technology and the burner assembly, which requires a screen to filter out the larger wood particles. These issues should be resolved by the demonstration unit under construction in Virginia.

Reciprocating Internal Combustion Engines

Reciprocating internal combustion engines suffer from some of the same problems regarding fuel gas quality as combustion turbines, but metallic contamination and particulate are more a pollution problem than a technical problem in operating these engines. As mentioned above, hydrogen chloride from MSW plastics can pose a corrosion problem if it is not removed from the fuel gas.

For proper operation of an internal combustion engine, the fuel gas must be cooled to avoid detonation of the fuel. This reduces the energy content of the fuel and thereby increases costs. For wood and MSW, the loss is about 50 percent, but may be lower for medium-energy gas from coal and higher for low-energy gas from coal. !f the waste heat from cooling the gas can be used onsite, this reduction in energy content does not reduce the engine’s overall fuel efficiency, but will reduce the electric generating efficiency.

Fuel gas that contains heavy organic compounds can produce gums that increase the maintenance requirements for reciprocating internal combustion engines. The formation of such gums is the most common operating problem with using fuel gas from relatively primitive wood gasifiers in these engines, and the second most

common problem with MSW gas (after hydrogen chloride formation). With wood gas, internal combustion engines that operate continuously may require overhauling every 6 to 12 weeks (1,000 to 2,000 hours of operation). Engines that burn gas from moderate- to high-temperature coal gasifiers are more likely to have maintenance requirements similar to those of engines that burn premium fuels (discussed in the previous section).

INTERCONNECTION

The analysis in this report assumes that the cogeneration technologies just described are interconnected with the centralized electric grid, so that the cogenerator may supply power to the grid and use backup power from the grid. However, interconnection with the grid may create problems for the utility system's operations or for the cogeneration equipment itself. As discussed in chapter 3, many State public utility commissions already have jurisdiction over utility connections with customers. In most States, this includes regulation of voltage levels and safety standards. However, in the past the utilities and State commissions have had to be concerned only with regulating power flow in one direction—from utility equipment to the customer. Because interconnected cogeneration will involve power flows in both directions, utilities' and regulatory commissions' tasks in these areas will be more complicated.

If cogenerated power is of a different quality from that distributed on the grid, it may affect the utility's ability to regulate power supply and may result in damage to both the utility's and its customers' equipment. Moreover, large numbers of utility-dispatched dispersed generators could make central load dispatching more difficult. Utilities also are concerned about properly metering the power consumption and production characteristics of grid-connected cogeneration systems, and about the effects of such systems on the safety of utility workers. Finally, all of the above concerns raise questions about liability for employee accidents or equipment damage that may result from improper interconnection.

The Public Utility Regulatory Policies Act of 1978 (PURPA) authorizes the Federal Energy Regulatory Commission (FERC) to issue orders under the Federal Power Act requiring the physical connection of a qualifying cogenerator (or other small power producer) with electric utility transmission facilities and any action necessary to make that connection effective (e.g., increasing the existing transmission capacity or improving maintenance and reliability) (see ch. 3). Under the FERC rules implementing PURPA, utility rates for purchases of power from and sales of power to cogenerators must take into account the net increased costs of interconnection (i.e., compared to those costs the electric utility would have incurred had it generated the power itself or purchased it from the grid), including the reasonable costs of connection, switching, metering, transmission, distribution, and safety provisions, as well as administrative costs incurred by the utility. Each qualifying cogenerator must reimburse the utility for these interconnection costs. The State regulatory commissions are responsible for ensuring that interconnection costs and requirements are reasonable and nondiscriminatory, and for approving reimbursement plans (e.g., amortizing the costs over several years versus requiring one lump-sum payment).

This section discusses the nature of potential interconnection problems for cogeneration, describes some of the technologies that can be used to resolve them, and reviews estimates of the cost of meeting interconnection requirements. Where data specific to cogeneration are not available, analogies are drawn from the relevant literature on wind or photovoltaic systems.

Power Quality

Utility customers expect electric power to meet certain tolerances so that appliances, lights, and motors will function efficiently and not be damaged under normal operating conditions. Power supplied to the grid by an interconnected cogenerator also is expected to be within certain toler-

ances, so that the overall power quality of the utility system remains satisfactory. Electric utilities are concerned about three types of power quality: correcting the power factor to keep the voltage and current in phase, maintaining strict voltage levels, and minimizing harmonic distortion.

Power Factor Correction

Current and voltage are said to be "in phase" if they have the same frequency and if their wave forms coincide in time. The capacitive and inductive properties of electrical circuits can cause the voltage and current to be out of phase at particular places and particular times. Phase shifts are expressed as the cosine of the fraction (in degrees) of the full 360° cycle of the difference between the voltage and current maximums, called power factor. A power factor of 1.00 means that the current and voltage signals are in phase. A power factor different from 1.00 means that the voltage and current are out of phase, and can be either "leading" if the voltage maximum occurs before the current maximum, or "lagging" if it occurs after. Because the most useful power is delivered when voltage and current are in phase, it is important that the power factor be as close to 1.00 as possible.

Phase shifts are one consideration in setting the demand component of rate structures (see ch. 3). Thus, utilities typically will have one rate for power with a power factor of 1.00 sold to other utilities, another rate for power sold to industrial customers which may have power factors much less than 1.00 and that require the utility to install special monitoring devices, and another rate for power sold to residential customers, where power factor is not measured individually (l).

Utilities (and cogenerators) supply power with two basic types of alternating current (AC) generators—induction generators and synchronous generators (64). An AC generator produces electric power by the action of a rotating magnetic field that induces a voltage in the windings of the stationary part of the generator. The rotation is caused by mechanical means (steam or combustion turbine, diesel engine, etc.) and the magnetic field is created by a current flowing in windings on the rotor. For an induction generator, this current is supplied by an external AC source, such as the electric power grid. For a synchronous generator the rotor current comes from a separate direct current source on the generator itself. As a result, a synchronous generator can operate independently of the electric grid or any other AC power source whereas induction generators cannot. When a cogenerator feeds into a power grid, induction generators can be advantageous because they are less expensive than synchronous generators (22). There are other characteristics of the two types of generators, however, which can negate this cost advantage.

First, synchronous generators have power factors of approximately 1.00 but can be adjusted to slightly leading or slightly lagging, while induction generators always have lagging power factors because they have more inductive than capacitive elements (15,35,64). Second, synchronous generators are more efficient than induction generators. These two points can cause synchronous generators to be preferred for units above a certain power level (about 500 kW), although the precise value depends on the situation (22). Third, care must be taken if there are several cogeneration units on a circuit, as would almost certainly be the case for a utility buying cogenerated power. When a synchronous generator is connected to other generators (either synchronous or induction), separate equipment is needed to synchronize each additional generator with the others. Such equipment is standard but does add to the total system cost.

Most cogenerators that have been installed to date have been larger synchronous machines because they can be used if the grid is disconnected and they offer redundant capacity for those (usually higher demand) customers who need secure power sources, such as hospitals and computer centers (15). However, PURPA provides incentives for all sizes of cogenerators, and thus those customers that can use smaller generators and do not need redundant capacity will have an economic incentive to use an induction generator. As the penetration of these induction cogenerators increases, more inductive elements are added to a particular distribution substation's circuits, resulting in a more lagging power factor. Unless the utility has a leading power factor, this creates three potential problems for the utility:

the capacity of both transformers and switching equipment in the transmission and distribution system may have to be increased to handle the out-of-phase signals; the efficiency of the transmission network may decrease;* and equipment and appliances may overheat and need more frequent overhaul (20).

Utilities normally improve lagging power factors by using capacitors, which may be sited either at the distribution substation or near the customer's load or generator, depending on the cause of the poor power factor and its magnitude (22). If the poor power factors are caused by smaller customers' equipment, utilities usually pay for the correcting capacitors, while larger customers often are required to pay for their own power factor correction. Most utilities have guidelines that state the minimum power factor allowed, usually 0.85 lagging (46). If a customer fails to maintain this minimum, utilities may ask the customer to install and pay for the necessary corrective capacitors. * * Traditionally, few utilities have leading power factors, because most utility circuits (and most appliances and motors) have more inductive elements than capacitive elements.

Similar policies will apply to cogenerators. Thus, many utilities are supplying capacitors (out of the overall transmission and distribution system) for smaller cogenerators, while requiring larger ones to pay for their own capacitors under the theory that there will be fewer substations with a significant cogeneration penetration. Thus, the avoided substation capacity becomes part of the utilities' avoided cost under PURPA and is credited to the cogenerator (see ch. 3).

Southern California Edison's guidelines are typical of those utilities that have set guidelines:

> Installations over **200 [kW]** capacity will **likely require capacitors to be installed to limit the adverse effects of reactive power flow on Edison's system voltage regulation. Such capacitors will be at the expense of the [co]generating facility (49).**

This expense can be important for smaller cogeneration systems: for example, the cost of capacitors to increase the power factor of a 300-kW generator from 0.70 to 1.00 can range from 1 to 4 percent of the capital cost of the cogenerator. *

However, just the installation of capacitors may not be sufficient. If the capacitors are located near induction generators, the generators may "self excite;" **in other** words, they may continue to operate even when they are disconnected from the utility power source. This could be a problem for utility lineworkers because the cogenerator could start supplying power and endanger the workers. This is discussed in more detail in the section on safety, below.

Voltage Regulation

In addition to potential problems with maintaining appropriate power factors, utilities also are concerned with regulating voltage. Utilities have many concerns about variations in voltage cycle from the standard cycle, both over long and short time intervals. While some customers can tolerate voltage levels outside of a specified range for very brief intervals (less than a second), any longer term variation will cause motors to overheat and will increase maintenance costs. * * Voltage cycle

***Other sources have indicated that the increase in utility transmission and distribution efficiency compensates for the decrease in power factor from induction generators (40). Efficiency is increased because more power is produced onsite and therefore less power is transmitted and less power is lost due to inefficiencies in the transmission and distribution system.**

****Salt River Project has monitored an interconnected photovoltaic array for an entire year and calculates that its average lagging power factor is about 0.50 (10). However, the array produces direct current (DC) power and uses an inverter to convert the DC power into AC. Since cogenerators produce AC power, no inverter is necessary. Inverters have a poorer power factor than most induction generators.**

***This range assumes that capacitors may cost anywhere from $9 to $40/kVAR (kilovolt-am peres-reactive, a measure of current and voltage handling capability), with the low end of the range representing the cost for capacitors used in the large bulk transmission systems, such as those maintained by American Electric Power; and the high end of the range representing the cost for capacitors used in smaller distribution system applications, such as single-family residence interconnections (29,43). The amount of capacitance needed to correct a power factor of 0.70 to 1.00 is 1.02 kVAR/kW (63). Capital costs are assumed to be $1 ,000/kW for a 300 kW generator (6,61). Thus, the range of costs are 40 X 1,02 = $41/kW to 9 x 1.02 = $9/kW, or approximately between 1 and 4 percent of the capital cost.**

****The American Public Power Association's guidelines cite a table from the Estimator's Guide that give recommended voltage ranges over a given day, hour, minute, and second (l).**

variations are minimized through the proper design and operation of generators. However, generators do not always function perfectly, and protective "over/under voltage" relays generally are necessary to disconnect the generator if its voltage falls outside of a certain range. These relays usually cost under $1,000, including installation (15,22).

The State regulatory commissions normally require a steady supply of 120 (or 240) volts (+/-5 percent) for residential customers (1). Large commercial and industrial customers often receive their voltage directly from substations or distribution lines, with much higher voltages and different tolerances (see the discussion of transmission and distribution in ch. 3).

Two major analyses are available of potential voltage regulation problems caused by improperly interconnected dispersed generators. One study considers a sample utility with sO percent of its customers generating power with wind machines (14). This study might be considered a "worst case" analogy for cogeneration because the output from the wind machines will change more often than the output of typical (either induction or synchronous) cogenerators. Even with this 50 percent penetration, the study indicates that substation voltage levels would remain within 5 percent of standard levels because:

> . . . **[the] addition of small wind systems to a [distribution] feeder will not occur suddenly; rather wind-turbine generators will be installed in small capacities throughout the utility's system and if, by chance, many are added to a particular feeder, the voltage profile will change gradually. [Also] utilities adjust voltage regulation equipment for normal load growth and wind-turbine generators added to a feeder will influence this normal adjustment procedure only slightly (13).**

In the second study, the Salt River Project (SRP) installed a transformer on its 37.5-kVA distribution circuits and connected it to two residences (both unoccupied), one of which uses a photovoltaic array, in order to test the effect of the photovoltaic system on other residences connected to the same distribution transformer (12). That study also concluded that voltages would remain within 5 percent of standard **(10).**

Both of these studies indicate that cogeneration should not present any longer term (i.e., lasting longer than 1 minute) voltage regulation problems for utilities. However, sudden and more brief changes in power system voltages can also occur in utility systems—especially when large power consuming equipment is turned on and off (such as the cycling of air-conditioner compressors and refrigerators). These changes are caused by the large amount of current that is needed to startup these motors, thereby removing some power normally used for the remaining load on the circuit. Because these large surges of power can temporarily dim lights, these changes are called "voltage flicker. "

Utilities usually confine voltage flicker problems to the customer's own system by requiring some large commercial and industrial customers to use a "dedicated" distribution transformer that connects the customer's load directly to a higher voltage distribution line, substation, or, in some cases, the higher voltage transmission network. * Because of this policy, voltage flicker and regulation effects of cogenerators are extremely site- and circuit-specific and it is difficult to make **any** general statements except that most of the commercial and industrial facilities that are potential cogenerators probably already have a dedicated transformer (15). Therefore there would be no additional cost for voltage regulation if these customers were to install cogenerators. One way for cogenerators to get around this problem is to install synchronous generators, which already include voltage regulators.

However, if a potential cogeneration facility does not have a dedicated transformer and uses an induction generator (e.g., smaller commercial and residential customers), the cost involved in installing a transformer could be equal to all other interconnection equipment costs combined, and therefore could be a major disincentive to cogeneration. In general, however:

> dedicated transformers are not a valid **issue for any but the** smallest cogenerators **or small**

***The connection depends on the size of the customer's** *load* **(usually, the larger the customer, the higher the voltage connection), the density of the surrounding area (transformers would be needed in rural areas with spotty concentrations of loads, and in very high density urban areas), and on other site- and distribution-circuit-specific conditions.**

power producers (less than about 20 kw) and, of those, only the ones installed in high density areas where non-dedicated transformers are the usual method of service. where a dedicated transformer is needed, the issue usually is] settled through negotiations between the utility and the customer with the requirement for a dedicated transformer being waived if it would be impractical (15).

Even though dedicated transformers may not bean issue for many cogenerators, most utilities protect themselves by including a clause in their interconnection agreement that says:

[f high or low voltage complaints or flicker complaints result from operation of the customer's [co]generation, such generating equipment shall be disconnected until the problem is resolved (49).

The interim guidelines published by the Rural Electrification Administration state that "no induction generators larger than 10 kW should be permitted on single phase secondary services . . . due to possible phase unbalances and voltage flicker" without the electric cooperative first studying the situation to ensure that adequate and reliable service to all members will be maintained (52).

Harmonic Distortion

A third utility concern related to power quality is harmonic distortion. Occasionally, other frequencies besides the standard 60 cycles per second are transmitted over the power system, usually due to the use of an inverter that converts **DC** power into AC power. The distortions are called harmonics because they have frequencies that are multiples of 60. These distortions may be made up of several harmonic frequencies or a single strong frequency. A 60 cycle-per-second power signal accompanied with many other harmonic signals may cause several problems for the utility:

Excessive **harmonic voltages [and currents] may cause increased heating in motors, transformer relays, switchgear*/fuses, and circuit breaker ratings, with an accompanying reduction in service life, or distortion and jitter in TV pictures, or telephone interferences.** Also, excess **harmonics may produce malfunction in systems using digital and communications equipment (20).**

Other possible problems caused by excessive harmonics are the overloading of capacitors, malfunctioning of computers, and errors in measuring **power at the customer's kilowatthour meter** (12,25).

What constitutes "excessive" harmonics is not well defined. There is no agreement on the exact ratio of distorted signals to the standard signal, and a great deal of research is underway to determine this ratio precisely. SRP has collected data on the operation of an interconnected photovoltaic array for over a year:

But, SRP feels further study is needed on the level of harmonics that occurs naturally on a utilty system, the limits that must be placed on harmonics required to prevent adverse effects on equipment and appliances, and on whether certain harmonic frequencies are more harmful [to the utility system] than others (4 l).

While further research is underway, both the Electric Power Research Institute (EPRI) and the American Public Power Association (APPA) have recommended maximum percentage limits for total systemwide harmonic distortions for both current and voltage signals (as well as limits for any one single source and single voltage or current frequency). EPRI **(20)** suggests 5 percent for current harmonics, and 2 percent for voltage, while APPA (1) suggests 10 percent for current and 2 percent for voltage. *

In the past, most of the major problems of harmonics have occurred with the normal operation of inverters, rather than any malfunctioning of conventional induction or synchronous generators (15). Since inverters have a high capital cost, they rarely are used and their present impact on utility systems is small in most cases. Because cogenerators produce AC power at the standard power system frequencies and, therefore, do not use inverters, and because these generators are not normally a significant harmonic source, most

***Switchgear (used in this citation and throughout this report) refers to all of the necessary relays, wiring, and switches that are used in interconnection equipment.**

***Several municipal utilities already have adopted APPA's recommendations for harmonics, such as the Salt River Project in Phoenix.**

utility engineers feel that harmonic distortions will not increase when cogenerators are interconnected to utility systems (43).

Summary of Power Regulation Problems

Smaller cogenerators (under 20 kW) may not be able to afford the necessary power regulation equipment in connecting to the centralized grid, including capacitors to correct power factor (if required) and dedicated transformers to regulate voltage (if not already in use). However, these smaller units may have little or no adverse effect on overall system power quality, according to one study looking at wind machine penetration. Thus, a utility, when considering each particular case of a smaller cogenerator, may be able to exempt the cogenerator from the requirements for expensive interconnection equipment. Larger grid-connected cogenerators might need to install capacitors to correct for power factor—if they use induction generators— but probably will have a dedicated transformer already.

Even though all of the power quality effects of interconnected cogeneration are very site-specific, most of the evidence gathered so far indicates that neither excessive harmonic distortion nor objectionable voltage flicker will be caused by adding any size of cogenerator to the centralized system.

Metering

Three types of metering configurations can be used to measure the amount of energy consumed and produced by dispersed generators. The first uses the simple watthour meter that is commonly found outside of most homes today and that costs approximately $30* (1,29). When a cogenerator is producing power that is sold back to the utility, the watthour meter simply runs backward (even though the meter running backwards can be off as much as 2 percent in measuring power) (l). As a result, the meter will measure only net power use, thus assuming that there is no difference between the utility's rates for purchasing cogenerated power and its retail rates. If these rates are different (as they are likely to be with most utility systems) then two watthour meters can be used, one that runs in the reverse direction of the other, with the first meter to measure power produced by the cogenerator and the second (equipped with a simple detente or rachet that prevents the reverse rotation of its induction disk) to measure the customer's power consumption. This configuration is recommended by the National Rural Electric Cooperative Association interim guidelines, unless the individual electric cooperative prefers a different metering system (52).

The third configuration uses more advanced meters to measure a combination of parameters, including power factor correction, energy, and time-of-use. * Some utilities are asking customers to install these advanced meters in order to understand the relationship between the cogenerator and the central power system better, and to collect the best data possible to help determine future interconnection requirements (such as **information on power factor requirements and peak demands) and to decide how to price buyback and backup** power. These more sophisticated meters can cost $300 or more each (29). In some cases, such as with Georgia Power, the utility is supplying the advanced meters and paying for the collection and analysis of data (30). In others, such as with SRP (46) and Southern California Edison, ** the customer may be asked to pay for the meters (either as a one-time charge or in several types of monthly installment plans).

Controlling Utility System Operations

Most utility systems have a control center to coordinate the supply of power with changes in demands. Such coordination involves both day-

***More complicated (and more expensive) three-phase watthour meters may be used where three-phase power, which consists of three (current and voltage) single-phase signals, each out of phase with the others by 120°, is supplied to larger commercial and industrial customers.**

***Theordore Barry & Associates (52) provides many examples of these more advanced configurations, and includes the cost (excluding instrument transformers) for different combinations of single-phase meters.**

*** *southern California Edison already bi lls its larger customers (either those installations with greater than 200 kW of generation or those with less than 200 kW generation with greater than 500 kW of load) using time-of-day meters. Customers that become cogenerators who do not have time-of-day meters already will not be required to install them by Edison (15).**

to-day operations, including dispatching generators and monitoring load frequency and power flows over the transmission and distribution network, and longer term tasks needed to schedule unit commitments and maintenance (25). If load changes are not anticipated correctly by system controllers, transformers may become overloaded and circuit breakers may open the line, possibly causing power reductions or interruptions for customers that are connected to that transformer. Cogenerators have the potential to affect two types of system operations: generation dispatch and system stability.

Generation Dispatch

Many utilities are concerned that large numbers of cogenerators will overload system dispatch capabilities, including the ability to anticipate transformer overload conditions (43). If the utility feels the cogenerated electricity needs to be dispatched centrally, it could require a connection via telemetry equipment between the cogenerator and the control center, so that the system controllers can turn cogenerators on and off according to the overall needs of the utility system (36). This telemetry equipment is costly, and probably would be used only with very large cogenerators.

One study has looked at potential dispatch and control problems for a large penetration of wind generators and has concluded that with approximately half of the load using grid-connected wind turbines, the dispatch and control errors of the system controllers would not increase significantly (14). Because wind machines would have greater fluctuations of power output than cogenerators, large numbers of cogenerators should pose even fewer control problems.

For smaller cogenerators, it is unlikely that the utility would require any dispatch control. Rather, these smaller units can be treated as "negative loads," in which case the controller would subtract the power produced by the dispersed sources from his overall demand and dispatch the utility's central station generation to meet the reduced demand. Negative load treatment probably will be more advantageous to the utility system than dispatch telemetry because the overall impact of smaller cogenerators on system loading and voltage conditions may be quite limited (44).

Negative load scheduling works well for those utilities that already have a few cogenerators online, and some utility transmission planners believe that even much larger numbers would not cause problems for the utility. That is, as more cogenerators are added to a particular distribution substation, the utility would continue to use negative load scheduling. (The utility would need to increase the capacity of the transmission and distribution lines–equivalent to upgrading the capacity of its lines as a developer adds more homes to a subdivision.) Because conditions are so site-specific, it is difficult to generalize and put forth guidelines, and each utility's situation must be considered individually to determine the appropriate requirements **(44).**

System Stability

Stability refers to the ability of all generators supplying power to stay synchronized after any disturbance (such as after a fault on part of the power system) (25). At its most extreme, a disturbance may cause a loss of synchronization for the entire power system (resulting in a possible systemwide blackout), or may alter the flow of power within the system and cause selected blackouts.

Not much is known about the effects of a significant number of cogenerators on a system's stability. Utilities are concerned that large penetrations of small, dispersed sources of power could contribute to unstable conditions. Some analysts (25) cite a 5 to 10 percent penetration of the service area (with photovoltaic systems) as the definition of "large penetration," while others cite much higher figures. One study by Michigan State University (cited in 25) shows that wind turbines cause fewer stability problems for the overall utility system than variations in weather (such as the movement of storm fronts). Further research on the effects of cogenerators on system stability is needed before any conclusions can be made, however.

Safety

A major concern with interconnection of dispersed generators is the safety of utility employees working on transmission and distribution lines. During routine maintenance or repairs to faulty lines, lineworkers must disconnect the generation source from the service area, and establish a visibly open circuit. Also, before starting any repairs, they must ground the line and test it to ensure that there is no power flowing in the line. The Occupational Safety and Health Administration publishes a series of guidelines for utilities on these procedures (OSHA subpt. V, sees. 1926.50 through 1926.60),

Disconnecting and grounding the lines is relatively simple when the generation system is centralized and there are few sources of supply. However, with numerous sources of power supply (as with grid-connected cogenerators) the disconnect procedure becomes more complicated and extra precautions may be needed: the utility must keep careful accounts of what dispersed equipment is connected to the system, where that equipment is located, what transmission lines and distribution substations it uses, and where the disconnecting switches are located. To simplify these procedures, many utilities have asked cogenerators to locate their disconnect switches in a certain place, such as at the top of the pole for the distribution line going into the customer's building (30).

Disconnecting and reconnecting a cogenerator is not so simple as just turning the switch off and on, because the cogenerator must be synchronized and brought up to the standard frequency before coming back on-line with the centralized system. Without this synchronization, both the cogenerator and the customers' appliances could be damaged.

However, the normal operation of circuit breakers that have disconnected a line to clear a fault is to reclose automatically after a fraction of a cycle. * If a problem on the line is still present, a cogenerator also will need to be concerned about this reconnection. Most utilities require protective equipment that can disconnect the cogenerator from the line before any reclosing can occur (49).

Another problem with disconnecting cogeneration equipment is self-excitation of the generators. When an induction generator is isolated from the rest of the grid (because of a downed line or a breaker opening the line), the absence of the grid-produced power signal usually will shut down the generators. However, if there is sufficient capacitance in the nearby circuits to which the generator is connected (e.g., power factor correcting capacitors), the induction generator may continue to operate independently of any power supplied to the grid. * The power signal produced by the isolated self-excited induction generator will not be regulated by the grid's power signal and the customer's electricity-using equipment may be damaged. More importantly, an isolated induction or synchronous cogenerator that reenergize on the customer's side of a downed transmission or distribution line, could endanger utility workers. Self-excitation is less of a problem with synchronous generators (which will continue to operate independently of the grid).

There are two ways to prevent self-excitation problems. First, the utility can put the corrective capacitors in a central location, in which case disconnecting a cogenerator also will disconnect the capacitors and reduce the possibility of self-excitation. Southern California Edison recommends this method for smaller (less than 200 kW) cogenerators (49). Alternatively, voltage and frequency relays and automatic disconnect circuit breakers can be used to protect both the customer's equipment and utility workers.

In summary, while extra precautions must be taken to ensure the safety of utility crews, none of these precautions is difficult to implement and,

*One consultant cites the following example:

An oil circuit recloser (OCR) responds to a fault, such as a tree limb against a conductor, by deenergizing the line for approximately one-quarter to one second, and then recloses to restore service In the event the fault was temporary. This operation may be repeated up to three times, depending on the recloser setting, before the OCR [leaves] the line deenergized (52).

Such alternate connecting and disconnecting can damage the cogenerator.

*One consultant calculated that this self-excitation is possible with wind turbines (1 4). A 100-kW machine capable of supplying half of the customer's load, connected to the capacitors needed to correct a 0.75 power factor to 1.00, will self-excite and supply 30 volts to that load—25 percent of the standard 120 volts.

when properly carried out, will minimize the potential for danger to utility personnel.

Liability

Despite the protective relays and automatic disconnect switchgear that may be installed, this equipment may not always function properly and the cogenerator could damage the utility's equipment or other customers' appliances. Under PURPA, the net increased interconnection costs may include the cost of insurance against liability for such damage, or liability may be assigned to the cogenerator in the purchase power contract. Liability issues also have been raised regarding wheeling, but in that case no special insurance policy is needed, and all the ratepayers share any liability for damage due to wheeled power (6).

At the present time, few guidelines exist for utilities concerning the liability of the cogenerator. A set of guidelines being prepared by EPRI recommends that the cogenerator be responsible for damages caused by the cogeneration system, up to and including the connection to the customer's side of the meter (20). A second approach has been adopted by Southern California Edison, whose interconnection contract provides that:

> Customer is solely responsible for providing protection **for customer's facilities operating in parallel with Edison's system and shall release Edison from any liability for damages or injury to customer's facilities arising out of such parallel operation, unless caused solely by Edison's negligence . . . Customers shall be required to maintain an in-force liability insurance in an amount sufficient to satisfy reasonably forseeable indemnity obligations and shall name Edison as an additional insured under said insurance policy (49).**

A precise definition of "reasonably foreseeable indemnity obligations" is not yet clear. Few utilities will put an exact figure in writing and leave each case to be determined on an individual basis. Many have argued against some of these liability requirements that place an excessive cost burden on owners of cogenerators and small power producers. A staff report to the California Public Utilities Commission (CPUC) recommended that utilities be allowed to include only standard "boilerplate" liability and indemnity provisions, and not to require a cogenerator "to assume a greater responsibility for losses resulting from its acts or equipment failure than it would have under common law principles" (8). The staff also has tried to eliminate the dual cost burden of insurance and dedicated transformers, and has recommended that cogenerators and small power producers with capacity under 20 kW that have installed dedicated transformers be excused from providing proof of liability insurance. In another case, the New York Public Service Commission ruled that the utility could not require a cogenerator to assume the utility's broadly sweeping liability clauses, but rather the utility could require a cogenerator to be responsible only for negligent installation and operation of his equipment (3).

Summary of Requirements

Cogenerators may need several types of equipment for proper interconnection with centralized utility grids: corrective capacitors to meet power factor requirements, relays and filters to protect the circuits of other customers, special meters to measure cogeneration energy profiles, and dedicated transformers and increased transmission and distribution line capacity to ensure reliable service. Moreover, cogenerators may be required to carry special liability insurance to limit the **responsibility of the utility or its noncogenerating customers.** These requirements are displayed graphically in figure 41.

While utilities and cogenerators agree that interconnection may pose all of the problems discussed above, there is still much to be decided about the frequency and severity of these problems for particular cogeneration systems. Even when utilities and cogenerators agree about the nature of potential interconnection problems, they may disagree about the type or quality of equipment necessary to resolve them.

Quality of Interconnection Equipment

One of the critical questions concerns the quality of the equipment used in the interconnection. There are two basic levels of quality: "industrial"

Figure 41.—Possible Power System Additional Equipment Requirements to Serve Qualifying Facilities

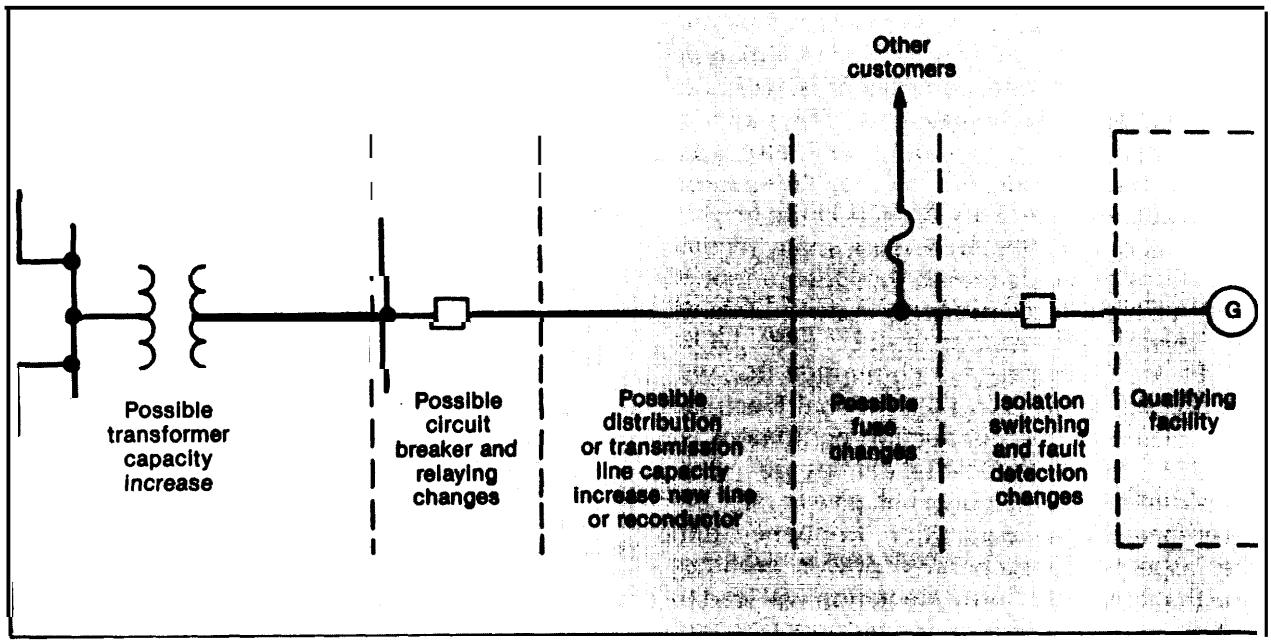

SOURCE: Blair A. Ross, "Cogeneration and Small Power Production Facility Effects on the Electric Power System," paper presented at Federal Energy Regulatory Commission conference on Cogeneration and SmalL Power Production RuLes, June 1980.

and "utility" grades. Utility grade equipment generally is more reliable and responsive, but it also costs more than industrial grade (40). Although requirements have varied in the past, a general consensus is emerging that industrial grade equipment is adequate for smaller (under 300 kW) cogenerators while larger cogenerators should use the more costly utility grade. This distinction is based not only on the safety implications of a system failure but also on the cost of replacing damaged equipment. For smaller cogeneration systems, the maintenance or replacement cost of utility grade equipment could be several times higher than the cogenerator's monthly electricity bill.

However, utility grade equipment may be necessary under certain circumstances. For example, Southern California Edison requires "utility quality" protective relays if a cogenerator is large enough (more than 1 -MW installed capacity) that the opening and closing of utility relays must be synchronized (49). While many utility engineers agree with this distinction, they also may disagree about the size of equipment that requires industrial or utility grade. One source suggests that industrial grade equipment should be used by cogenerators smaller than 200 kW, while others suggest 1 MW as the cutoff point (34).

Guidelines for Interconnection

Utilities differ widely in their general specification of interconnection requirements. Some utilities have adopted guidelines, while others review each interconnection design to ensure that it meets their standards. Although case-by-case review can result in costly delays for a cogenerator, utilities and interconnection experts agree that separate reviews are necessary until industrywide standards have been developed for the interconnection of onsite generating equipment (4). At this time, each cogenerator has virtually custom-designed configurations of interconnection equipment because the circumstances under which connections are made vary widely, and so few cogenerators have been installed by each engineer that it is difficult to generalize and use rules-of-thumb (57).

Research is underway to provide the needed information for future guidelines, and several sub-

committees of the Institute of Electrical and Electronics Engineers' (IEEE) Power System Relaying Committee* are working together on a manual of accepted interconnection standards, with specific engineering guidelines for a wide range of equipment types and conditions. EPRI also is assembling its own guidelines, although for a more general audience, and researchers at the Jet Propulsion Laboratory (JPL) have made many recommendations on guidelines to the Department of Energy's (DOE) Electrical Energy Systems Division (25). Several staff members at IEEE, EPRI, DOE, and JPL are delegates to a committee that will recommend changes in the National Electrical Code related to interconnection equipment by late 1983 (24). Finally, several utilities are installing instruments on their own initiative to measure power factor, voltage variation, frequency, and other aspects of cogenerated power, with the hope that this better instrumentation will lead to a better understanding of interconnection performance, costs, and benefits (37).

This research points out the need for performance-based guidelines—allowing cogenerators to meet general functional criteria—rather than technology-specific guidelines that might require particular technologies that could become outmoded or more costly in the future. The CPUC staff (8) recommended that utilities should use performance-based guidelines (that specify such functions as reacting properly to utility system outages, assisting the utility in maintaining system integrity and reliability, protecting the safety of the public and of utility personnel), rather than specifying a list of equipment that could restrict cogeneration unnecessarily (8).

Southern California Edison complied with the CPUC staff recommendation by issuing a complete set of equipment performance specifications as its guidelines. The guidelines provide all requirements for design, installation, and operation of interconnecting equipment in clear, easy-to-read language, and include examples of wiring diagrams and metering configurations that meet its performance specifications for three types of cogenerators: those over 200 kW with the interconnection equipment owned by the customer, those over 200 kW with the equipment owned by the utility, and those under 200 kW (49). Other consultants have also suggested that different policies be used with different sizes of generators, with one policy covering units under 5 kW, another for units between 5 and 40 kW, and a third for units over 40 kW (40).

Southern California Edison requires all interconnection equipment (that eventually will be owned by the utility) for cogenerators larger than 200 kW to have four functions:

(i) A set of utility-owned circuit breakers in addition to any circuit breakers that the customer may have installed,
(ii) synchronizing relays,
(iii) meters for kW and kWh produced and demanded, kVARh demanded, and (for cogenerators larger than 1 MW) telemetry and telephone communication lines, and
(iv) protective relays for short circuits, isolation (to separate the cogenerator from other customers on its line), over/under frequency and voltage, and circuit-breaker closing/reclosing (to prevent the re-energizing of an open line) (49).

For installations over **200 kw with customer-owned interconnections, the Southern California Edison requirements state:** "The customer shall provide adequate protective devices to detect and clear . . . short circuits, . . . detect voltage and frequency changes, . . . and prevent reparalleling the customer['s] generation." There are similar, although less stringent, requirements for under 200 kW equipment (49).

Southern California Edison also gives the cogenerators three different options for paying for all required interconnection equipment: (i) the utility supplies and owns the interconnection equipment and the cogenerator pays a standard monthly charge, currently 1.7 percent of the total costs of the facilities; (ii) the cogenerator installs the equipment to utility specifications and transfers ownership to the utility at which time the utility assesses a one-time engineering charge for approving the design, and the utility charges monthly operation and maintenance fees for the equipment (currently 0.75 percent of the total costs of the facilities), or (iii) the utility builds the equipment, with an advance payment from the cogen-

***Hassan and Klein (25) give a good list of the various groups within IEEE, as well as other organizations, that are working on these issues.**

erator, and the cogenerator pays the monthly operation and maintenance charge once construction is completed (49). Most utilities just offer the last option, with monthly charges greater than $1,000 for large installations of several megawatts capacity, and much less for smaller facilities **(46).**

Costs for Interconnection

Interconnection costs can vary widely depending on the size of the cogeneration system and on the requirements of the utility or State regulatory commission. Two published studies on cogeneration allow for a detailed comparison of costs for a variety of assumptions. One set of sample costs includes schemes for a variety of generators and is shown in table 26. These schemes have used similar assumptions in assembling the interconnection costs, and so are useful for comparison purposes and relating the economies of scale of interconnection.

As can be seen in table 26, the interconnection requirements for the larger units cost less per kilowatt to construct and maintain; and as the size of the cogenerator decreases, the cost per kilowatt increases rapidly, from $35/kW for the 20-MW generator up to $1,328/kW for the 2-kw generator. Because cogenerators in this range typically cost about $1 ,000/kW, the total costs for interconnection of these smaller generators can exceed the capital costs of the generators.

Some utility personnel feel these costs are higher than their experience would indicate (35,43). Some of these costs may be unnecessary or else might be paid by the utility instead of by the cogenerator (6,8). For instance, dedicated transformers may be installed already, thereby reducing the total interconnection cost substantially—in some cases by more than 30 percent.

These costs also depend heavily on whether existing switchgear is adequate or whether modifications will be necessary to accommodate the cogeneration equipment. For example, two different 900-kW installations might vary in cost between $150,000 (or $167/kW) and $250,000 (or $278/kW)–with the difference resulting **from** the number of modifications needed in existing distribution cables and switchgear (57).

Based on the published information, OTA has assembled cost information for three different sized systems, using two **series** of **assumptions** for interconnection requirements for two of the smaller generators and one set of assumptions for the larger generator (22).

Table 26.—Cogeneration Interconnection Sample Costs[a]

	Equipment (kW)		Costs (dollars)					
Scheme[b]	Generator size	Transformer size	Switchgear	Transformer	Relay	Engineering labor	Total	Total cost ($/kW)
Larger generators:								
A	20,000	20,000	*$296,000*	$314,000	$51,000	$30,000	$691,000	*$35*
B	5,000	10,000	150,000	160,000	43,000	30,000	339,000	*68*
C	4,200	10,000	129,000	160,000	18,000	26,000	319,000	*76*
D	1,000	2,500	56,000	31,000	11,000	12,000	104,000	104
E	200	750	27,000	16,000	7,000	10,000	60,000	300
Smaller generators:								
F	100	111	$4,700	*$2,250*	*$2,065*	$1,900	$10,915	$109
G'	50	112	4,340	1,530	*2,125*	1,550	9,545	191
H	50	112	1,570	1,530	1,325	1,500	5,925	119
I	20	30	2,590	640	360	1,450	5,040	252
J[d e]	5	25	496	130	360	950	1,935	387
K[d]	2	10	1,035	350	320	950	2,655	1,328

aAll costs include new (either shared or dedicated) transformers, but do *not* include: watthour meters, annual maintenance requirements for all interconnection equipment, and site preparation and cabling costs,
b industrial-grade relays are used in all schemes.

cScheme G uses more expensive circuit breakers than the other small generator schemes.
dschemes A *through I use synchronous* generators, all others use induction generators..
escheme J uses a shared transformer, all others use dedicated ones.

SOURCES: Office of Technology Assessment, from James Patton, Survey of *Uti/ity Cogeneraflon hterconnection Practices and Cost—Flna/ Report* (Washington, D. C.: U.S. Department of Energy, DOE/RA/29349-Ol, June 1980); James Patton and S. Iqbal, Small *Power Producer Irrterconnectlon Issues and Costs* (Argonne, Ill.: Argonne National Latmratory, February 1981).

Because the range of conditions and the use and cost of interconnection equipment may vary widely with smaller cogenerators, two sets of assumptions were used; a “best case” that assumes that power factor correcting capacitors, a dedicated transformer, and protective relays would not be needed; and a “worst case” that assumes that this equipment (along with more expensive meters and equipment transformers for these meters and relays) would be needed. Both 50-kW systems use induction generators, while both 5oo-kW and 5-MW systems use synchronous generators.

All of the equipment meets industrial grade specifications and operates at 480 volts on a three-phase circuit (these are common conditions for medium-sized equipment). All of the costs cited include installation, except for the protective relays which cost $250 to install (22). Table 27 displays the various cost components of the interconnection for the three generators.

The cost to interconnect the smallest generator (50 kW) varies between $52 and $260/kW, or a range of 5 to 26 percent of the capital cost of the generator (assuming $1 ,000/kW capital cost). The cost for the 500-kW generator varies between $22 and $66/kW, or 2 to 7 percent of the capital cost, while the cost for the largest generator (5 MW) is $12/kW, or 1 percent of the capital cost.

From table 27, two important results are observed: First, most of the variations in cost result from the addition of a dedicated transformer to the interconnection requirements, as well as the use of more expensive relays and other protective devices. Second, the cost per kilowatt of capacity decreases quickly as the size of the generator increases, primarily due to the economies of scale for circuit breakers, transformers, and installation costs, and because most of the cost of the relays is independent of the size of the generator they protect. For example, even though the capacity of the !@O-kW generator is ten times that of the 50 kw, the circuit breaker costs only eight times as much and the dedicated transformer only three times as much.

From these studies, it is concluded that there is a great deal of variation in the cost of interconnection equipment per kilowatt of cogeneration capacity. The costs will depend on the size of the cogenerator and the amount of transmission and distribution equipment already in place. Costs per kilowatt will increase as the size of the generator decreases and as the amount of new transmission and distribution equipment increases.

Summary

Interconnecting cogeneration could create problems for utilities, especially with respect to providing satisfactory power quality, controlling system operation, and minimizing utility liability and safety problems. While many of these problems may require special dedicated facilities or

Table 27.—interconnection Costs for Three Typical Systems

	50 kW		500 kW		5MW
Equipment	Best	Worst	Best	Worst	Average
Capacitors for power factor	—	$1,000		$5,000	– “
Voltage/frequency relays	$1,000	1,000	$1,000	1,000	$1,000
Dedicated transformer	—	3,900	–	12,500	40,000
Meter	80	1,000	80	1,000	1,000
Ground fault overvoltage relay	600	600	600	600	600
Manual disconnect switch	300	300	1,400	1,400	3,000
Circuit breakers	620	620	4,200	4,200	5,000
Automatic synchronizers	—	—	2,600	2,600	2,600
Equipment transformers	600	1,100	600	1,100	1,100
Other protective relays	—	3,500	–	3,500	3,500
Total costs ($)	$2,600	$13,020	$11,080	$32,900	$57,800
Total costs ($/kW)	52	260	22	66	12

NOTE: “-” means an optional piece of Interconnection equipment that was not Included in the requirements and cost calculations.

SOURCE: Off Ice of Technology Assessment calculations based on data derived from Howard S. Geller, The *Interconnection of Cogenerators arrd Small Power Producers to a Utility System* (Washington, D. C.: Office of the People’s Counsel, February 1982),

operating and administrative techniques, none are insurmountable and most have been resolved in the past (44). One executive remarks that the utility industry has not yet identified any problems with distributed generation which cannot be solved technically (43). The real problem is whether the cost involved will be prohibitive.

However, in order to determine costs, more analysis and better data are needed. Results obtained to date through simulation and analysis must be verified in the field (25). In addition, State commissions need to encourage those utilities that have not yet done so to prepare guidelines for interconnection requirements, and to update those guidelines as the results of new research being conducted by EPRI, DOE, APPA, IEEE, and individual utilities are made available, and as experience is gained.

THERMAL AND ELECTRIC STORAGE

The analysis in chapter 5 shows that the greatest opportunity for cogeneration occurs when onsite thermal demands closely match regional electric demands. To some extent, a cogenerator or a utility could mitigate a mismatch between these two demand curves through the use of devices that store either the thermal or electrical energy for release when it is needed. Thermal and electric storage techniques are described briefly below. *

Thermal Storage

The thermal demand of an industry or building is rarely constant; rather, it varies with the day (e.g., weekday v. weekend day) and time of day as well as with the season. As a result, an industrial or commercial cogenerator may produce more thermal energy than can be used immediately onsite. Similarly, if a cogenerator is supplying electricity to the utility grid, a mismatch between the timing and/or magnitude of the onsite thermal needs and the utility's electric demands could result in temporary excess thermal energy production. In such circumstances, it maybe advantageous to store this excess thermal energy for subsequent use during periods when the cogenerator is producing less than is needed onsite. Thermal energy storage also can be used to reduce peakloads on utility powerplants, to improve the efficiency of heating or cooling devices by reducing cyclic losses, and to make it practical to utilize periodic renewable energy sources (e.g., excess solar energy collected during the day can be stored for heating during the night).

There are three basic approaches for storing thermal energy. In sensible-heat storage, engine or exhaust heat is used to elevate the temperature of a liquid or solid that does not melt or otherwise change state for the temperature range in question. Water is the most widely used material for sensible-heat storage. It is relatively easy and inexpensive to store at temperatures below its boiling point, but can be stored at temperatures up to 300° to 400° F if pressurized tanks are used. At higher temperatures, the pressure required to maintain water in its liquid form would greatly increase the cost and danger of operating the system. Even at lower temperatures, it can be difficult to maintain constant output temperatures when the stored energy is tapped. Rocks also can be used in sensible-heat storage by heating them and keeping them in insulated containers. However, the heat storage capabilities of rocks are poorer than those of water,

Latent-heat storage occurs when a material undergoes a phase change (e.g., melting, vaporizing) when heated. This approach supplies energy at a relatively constant temperature and usually allows for greater amounts of energy to be stored in a given volume or weight of material, as compared to the sensible heat approach. More than 500 phase change materials have been reported as potential thermal energy storage candidates, but three basic categories are used in low-temperature applications: 1) inorganic salt compounds, 2) complex organic chemicals such as paraffins, and 3) solutions of salts and acids. The

*More detailed information on both types of storage maybe found [n reference 38.

disadvantages of latent-heat storage include the high cost of the phase change materials and the difficulty involved with transmitting thermal energy in and out of the storage medium.

Chemical storage techniques use heat to produce a chemical reaction, and then release the heat when the reaction reverses. The most promising materials for the chemical storage of thermal energy are metal hydrides (compounds of the metal and hydrogen) because their reactions can be reversed easily. Moreover, hydrides have relatively high heats of formation, while the reaction products can be stored at ambient temperatures and the heat recovered as needed and stored indefinitely with no need for insulation. Chemical storage techniques may be applied at a wide variety of temperatures, and transporting the chemical energy is convenient. However, chemical storage is likely to be less attractive than other methods because the catalysts required to facilitate the chemical reaction are expensive, as is the storage of gaseous chemicals in pressurized tanks, and the metal hydrides may be highly toxic and pose a dangerous fire risk.

The size of a thermal storage unit will depend on the onsite energy needs (e.g., a single residence, a large building or industrial plant, a utility powerplant). However, most of the experience to date is in the design, construction, and operation of smaller thermal energy storage systems capable of storing heat from electric generating plants with less than 500-kW capacity. Table 28 indicates possible required storage capacity as a function of typical industrial plant sizes.

Reliable data on costs, maintenance, and performance for thermal energy storage systems are not yet available. **Most systems are still in R&D stages.** Thermal energy storage using water in above ground or underground tanks has been studied the most and is closest to being ready for commercial use, although even these systems require more research and design work.

The component costs of a thermal energy storage system will include the cost of the storage medium itself, the containment facility that houses the medium, and the maintenance required to keep the storage system in working order. Other costs that accrue to sensible-heat systems using water include the cost of additives to inhibit corrosion or prevent freezing, which can be significant. Although costs are uncertain, developers have estimated storage costs as a function of storage capacity for several low- and high-temperature thermal storage systems (see figs. **42** and 43).

Table 28.–Thermal Energy Storage (TES) Capacity Range v. Plant Size

Characteristic size (MW)	TES capacity range (10^7 Btu)
2	4 to 6
20	40 to 60
100	200 to 300

SOURCE: Roger L. Cole, et al,, *Oesign and Installation Manual for Thermal Energy Storage* **(Argonne, Ill.: Argonne National Laboratory, AN L-79-15, 2d cd., January 1960)**

Figure 42.— Low-Temperature Thermal Storage Cost per KWh_t v. Storage Capacity

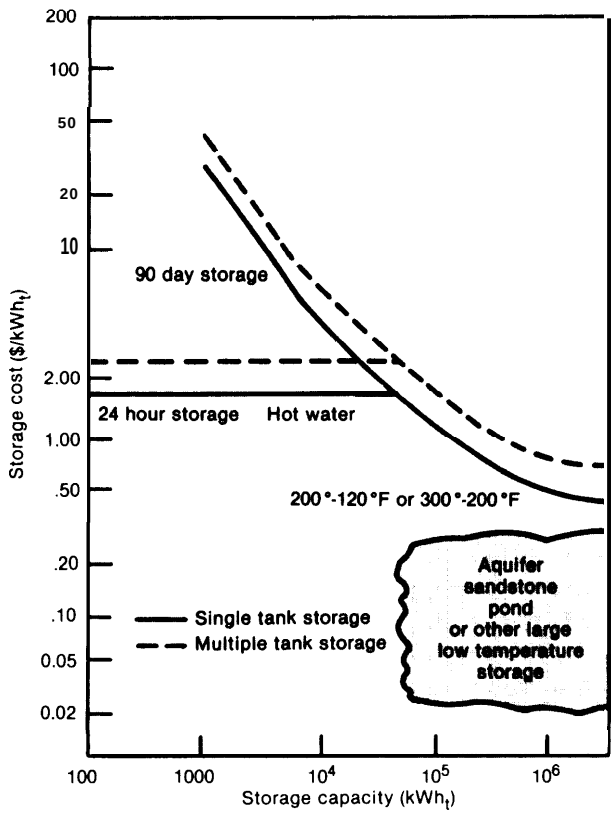

NOTE: The storage units would lose only about 5 percent of the energy stored in the interval indicated. This cost is based on precast concrete and coated steel, and excludes 25 percent O&P.

SOURCE: *Application of Solar Technology to Today's Energy Needs, Volumes I and II* **(Washington, DC.: U.S. Congress, Office of Technology Assessment, 1976).**

Figure 43.—High.Temperature Thermal Storage Cost per kWh$_t$v. Storage Capacity

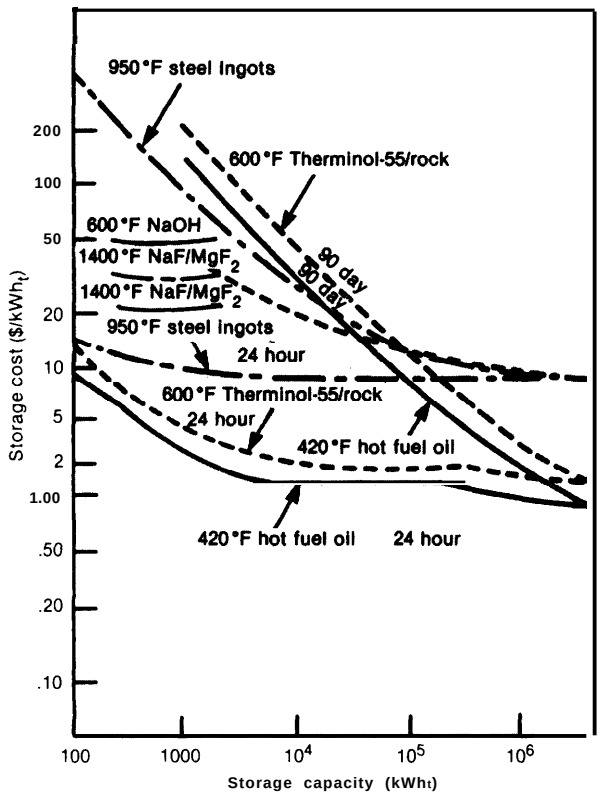

NOTE The storage units would lose only about 5 percent of the energy stored in the interval indicated

SOURCE. App//cat/on of Solar Techrrology to *Today's Energy Needs, Volumes 1 and //* (Washington, D C.: U.S Congress, Office of Technology Assessment, 1978)

Some general factors affecting efficiency, or the **percentage of thermal energy recovered from storage, are the supply temperature range (the ratio of the input temperature to the storage material temperature), the specific heat of the storage medium, and the insulating properties of the storage container. In general, the overall efficiency (energy in/energy out) declines as the** input temperature increases.

Little special maintenance **should be required for thermal storage tanks because they contain no moving parts.** However, it is necessary to check the tanks periodically for corrosion, and the effects of normal weathering may necessitate repainting or repair of the tank,

Electric Storage

Storage of electricity is an alternative means of matching generating capacity output with user demand. **It may** be particularly advantageous in conjunction with intermittent sources of electricity, including wind and solar generators as well as some cogenerators.

The primary methods of storing electric energy are:

- ***pumped storage,*** in which electricity is used to pump water to a higher elevation during periods of low electricity demand, and then the water is released to the lower elevation to drive a turbine during times of peak demand;
- ***compressed air storage,*** in which electricity is used to compress air during low demand periods, and then the air is heated and expanded through a combustion turbine to generate electricity at peak demand;
- ***electrochemical storage,*** which (as with chemical thermal energy storage) uses reversible electrochemical reactions to store electric energy (e.g., in batteries);
- ***mechanical energy storage,*** which uses flywheels brought up to speed by electric motors to store kinetic energy for subsequent controlled release to generate electricity; and
- ***thermal storage,*** in which electricity is converted to heat and stored in hot solid, liquid, or gaseous materials (as described above) for subsequent controlled release to generate elect ricity.

The most common form of electric energy storage for dispersed energy systems (such as cogenerators) would be battery storage. * However, the electric energy must be introduced and withdrawn from batteries as direct current, and thus inverters must be included in any battery system that receives and produces alternating current. Within large bounds, the cost of batteries per unit of storage capacity is independent of the **size of** the system because most batteries consist of a

*Battery storage of electricity is discussed in detail In ***increased Automobile Fuel Efficiency and Synthetic Fuels: Alternatives for Reducing Oil Imports*** (OTA-E-185, September 1982).

large number of individual reacting cells. Larger systems may benefit from some economies of scale because of savings due to more efficient packing, lower building costs, and possibly lower costs of power conditioning (see discussion of interconnection), but a separate analysis on this point must be performed for each type of battery. It is likely that there will bean optimum size for each device.

Lead-acid batteries are the only devices currently mass produced for storing large amounts of electric energy using electrochemical reactions. Systems as large as 5,000 kWh currently are used in diesel submarines. However, contemporary lead-acid battery designs have a relatively low storage capacity per unit weight (due largely to the amount of lead used), and batteries now on the market that can be discharged deeply often enough for onsite or utility storage applications are too expensive for economic use in electricity generation. Extensive work is being done to determine whether it is possible to develop batteries suitable for use in utility systems, including work on advanced lead-acid battery designs and on several types of advanced batteries that may be less expensive than lead-acid batteries in the long term.

Advanced battery types include nickel-iron, nickel-zinc, zinc-chlorine, sodium-sulfur, and lithium-metal sulfides. Operating and cost characteristics as well as expected availability data are given in table 29 for several battery types. A comparison of technical and cost characteristics for several electric storage systems, including thermally based electric storage is given in table **30.**

Table 29.-Cost and Performance Characteristics of Advanced Batteries

Battery type	Operating temperature (degrees Celsius)	Energy density (watthours per kilogram)	Power density (watts per kilogram)	Estimated cycle life	Estimated cost (dollars per kilowatthour)	Estimated availability (year) (prototypes or early commercial models)
Lead-acid						
Utility design	Ambient	—	—	2,000	80	1984
Vehicle design (improved).	Ambient	40	70	> 1 ,000"	70	1982
Nickel-iron	Ambient	55	100	>2,000 (?)	100	1983
Nickel-zinc	Ambient	75	120	800 (?)	100	1982
Zinc-chlorine						
Utility design	30-50	—		2,000 (?)	50	1984
Vehicle design	30-50	90	90	> 1,000 (?)	75	1985
Sodium-suifur						
Utility design	300-350	—	—	> 2,000	50	1986
Vehicle design	300-350	90	100	> 1,000		1985
Lithium-iron sulfide. . .	400-450	100	>100	1,000 (?)	80	1985

NOTE: Variety of advanced types of batteries are currently under development for electric-utllity storage systems and electric vehicles because the lead-acid battery probably cannot be Improved much further. The table lists the properties of batteries that may prove superior. The most important criterion for storage in electric-power systems is long life: the ability to undergo from 2,000 to 3,000 cycles of charge and discharge over a 10- to 15-year period. For electric vehicles the chief criteria are high energy content and high power for a given weight and volume. (The dashes indicate that these criteria do not apply to electric utilities.) Both the utillties and vehicles wlll require batteries that are low in cost (preferably less than $50/kWh of storage capacity), safe, and efficient.

SOURCE: F. R. Kalhammer, "Energy-Storage Systems," 241 *Scientific American 5665,* December 1979.

Table 30.—Expected Technical and Cost Characteristics of Selected Electrical Energy Storage Systems

Characteristics	Hydro pumped storage	Compressed air	Thermal		Lead-acid batteries	Advanced batteries
			Steam	Oil		
Commercial availability . . .	Present	Present	Before 1985	Before 1985	Before 1985	1985-2000
Economic plant size (MWh or MW)	200-2,000 MW	200-2,000 MW	50-200 MW	50-200 Mw	20-50 MWh	20-50 MWh
Power related costs[a] ($/kW)	90-160	100-210	150-250	152-250	70-80	60-70
Storage related costs[a] ($/kWh)	2-12	4-30	30-70	10-15	65-110	20-60
Expected life (years)	50	20-25	25-30	25-30	5-10	10-20
Efficiency[b] (percent)	70-75	—[c]	65-75	65-75	60-75	70-80
Construction leadtime (years)	8-12	3-12	5-12[d]	5-12[d]	2-3	2-3

aConstant 1975 dollars, does not include cost of money during construction.
bElectric energy out to electric energy in, In percent
cHeat rate of 4,200 t. 5,5oo Btu/kWh and compressed air pumping requirements from 0.58-0.80 kwh (out)
dLong leadtime includes construction of main PowerPlant.

SOURCE' Decision Focus, Inc., *Integrated Analysis of Load Shapes and Energy Storage* (Palo Alto, Calif.: Electric Power Research Institute, EPRI EA-970, March 1979)

COGENERATION AND DISTRICT HEATING

District heating is the use of one or more centralized sources of heat to supply thermal energy to a group of buildings through a piping network. A district heating system could provide space heating and domestic water heating, and in some cases space cooling, to residential and commercial customers, or it could provide thermal energy for industrial processes. A district heating system is not limited to any particular type of heat source, but could use conventional boilers, cogenerators, industrial or utility waste heat, or municipal incinerators with heat recovery equipment. District heating systems generally are thought of as large citywide systems—and thus, in a sense, centralized power production—but they also can be smaller systems suitable for industrial or commercial parks, college campuses, and military bases. This section will summarize the advantages and disadvantages of district heating based on cogenerators; a more complete discussion of district heating can be found in the OTA assessment, The ***Envgy Efficiency of Buildings in Cities.***

A district heating system comprises three major components, as shown in figure 44: the thermal production plants that provide heat to the system; the underground transmission/distribution system, which conveys thermal energy (in the form of hot water or steam) from the thermal production plants to customers; and the in-building equipment—typically a heat exchanger that forms the connection between the system distribution network and the remainder of each in-building heating and cooling system.

Proponents of district heating systems for the United States cite several potential advantages of such systems, including the improved fuel utilization efficiency of cogeneration compared to conventional steam-electric generating stations (as described above); reduced heating costs (through the use of currently discarded heat and increased equipment efficiency) relative to conventional heating systems; increased certainty of fuel supply, through reduced consumption of oil and

Figure 44.—European Cogeneration District Heating System

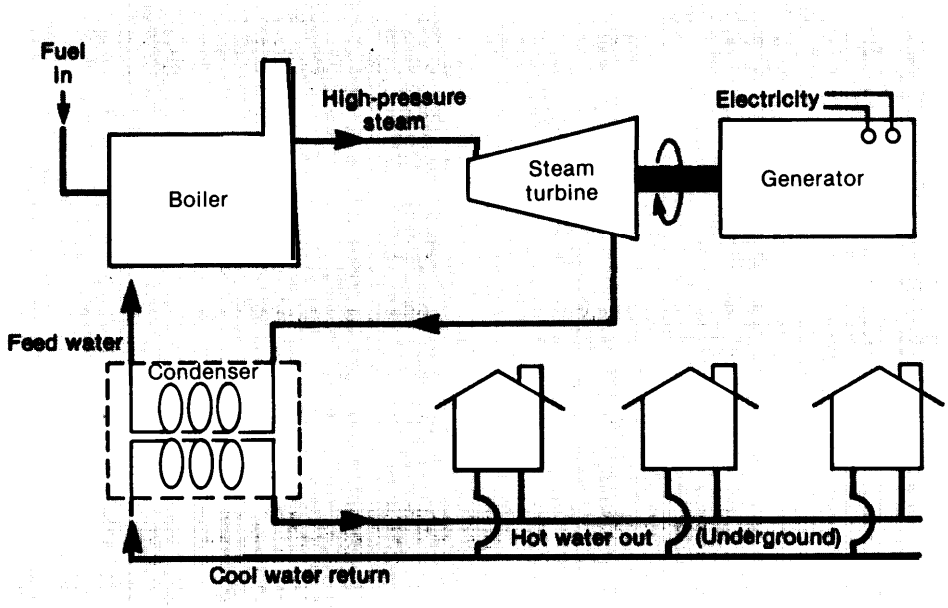

SOURCE: Bruce W. Wilkinson and Richard W. Barnes (eds.), Cogeneratlon *of Electricity and Useful Heat* (Boca Raton, Fla.: CRC Press, Inc., 1980).

natural gas for space heating, and/or a switch to coal or waste fuels; reduced fire hazards in buildings, through the substitution of a heat exchanger for a furnace, a boiler, or electric resistance heaters; reduced land requirements for sanitary landfills if resource recovery facilities, such as heat recovery incinerators, are used in district heating systems; and increased employment and revitalization of urban areas.

However, district heating also may have a number of disadvantages. These include a very high capital cost, due mainly to the transmission/distribution piping. Financing is crucial to the economic viability of district heating systems. If the district heating system burns a high-grade fossil fuel (natural gas or oil), the increase in fuel use efficiency and the cost advantage to the consumer (compared to individual heating units) are diminished by the high capital costs and thermal losses in piping. Thus, a district heating system will have a clear benefit only if it can utilize lower price, relatively abundant fuels such as coal and municipal solid waste that cannot be burned directly in individual heating units. In addition, the installation and maintenance of district heating systems, including the time required for the piping, can be drawn out and disruptive. During construction, commercial establishments may lose business and traffic may have to be rerouted. Furthermore, system maintenance sometimes will require reexcavation of the pipes, but cannot always be performed during periods of low heat demand (summer), since a break in the system during the winter could prevent heat from reaching customers who do not have backup heating systems. Finally, district heating systems have limited applicability, and some very specific conditions must be met for viability, including a high connection rate and careful design and siting. These latter points are discussed more completely in ***The Energy Efficiency of Buildings in Cities.***

District heating is not a new idea, but a technically proven concept with no breakthroughs or discoveries needed for implementation. Over 40 utility-run steam district heating systems in the United States go back as many as 80 years, while many smaller steam systems serve university campuses, shopping centers, industrial parks, military bases, or industrial plants located adjacent to power stations. A high proportion of the heat in

Northern Europe is supplied by hot water district heating. However, U.S. city-scale district heating systems owned by utilities have, up until now, enjoyed little success when compared to European systems, primarily because European systems use hot water instead of steam. Steam district heating systems are only justified for small areas with very high thermal load densities, preferably with connections to industrial users. Hot water systems are preferred for commercial/residential space and water heating because thermal extraction from steam turbine cogenerators (the most common type used in district heating systems) should be done at relatively low temperatures to reduce losses in electric generating capacity (see discussion of steam turbine efficiency, above) and heat losses during transmission and distribution.

The potential contribution of cogeneration district heating could be significant, but its actual use will be strongly influenced by a variety of technical, institutional, and economic factors. Its feasibility is extremely site- and region-specific. Such factors as climate, energy density, fuel type, fuel availability, present and future fuel cost, age and type of heating equipment in existing buildings, and type of existing electric generating capacity can influence the viability of district heating. In addition, analyses of district heating systems are extremely sensitive to interest rates, tax provisions, utility rate structures, environmental regulations, local building and electrical codes, and labor regulations. Promotion of district heating may require streamlining of permit procedures, additional tax credits, low cost loans, resolution of conflicts with environmental regulations, and favorable treatment with respect to fuel allocations and curtailments.

CHAPTER 4 REFERENCES

1. American Public Power Association, *Cogeneration and Small Power Production, Guidelines* (Washington, D. C.: American Public Power Association, November 1980).
2. Arthur D. Little, Inc., *Distributed Energy Systems: A Review of Related Technologies* (Washington, D. C.: U.S. Department of Energy, DOE/PE 03871-01, November 1979).
3. Bawn, William E., Jr., and Guerrero, J. V., *Utility Concerns About Interconnected Small Energy Systems, Technical Memorandum* (Golden, Colo.: Rocky Flats Wind Systems Program, Rockwell international Corp., November 1980).
4. Blenkle, Gerard L., Consolidated Edison Co. of New York, testimony before New York State Public Service Commission, case No. 27574.
5. Bos, Peter G., and Williams, James H. "Cogeneration's Future in the Chemical Process Industries (CPI)," *Chemical Engineering,* Feb. 26, 1979, pp. 104-110.
6. Bullard, Clark, University of Illinois, private communication to OTA, October and November 1981.
7. California Energy Commission, Commercial *Status: Electrical Generation and Nongeneration Technologies* (Sacramento, Calif.: California Energy Commission, P102-8O-OO4, April 1980).
8. California Public Utilities Commission, "Standards for Operating Reliability," ch. 14 in *Final Staff Report on Cogeneration and Small Power Production Pricing Standards, Order Instituting Rulemaking No.* 2 (San Francisco: California Public Utilities Commission, January 1981).
9. Cantus, H. Hollister, United Technologies Corp., personal communication to OTA, Dec. 2, 1980.
10. Chalmers, Steve, "Solar Rankine Cooling and Cogeneration Installations and Solar Photovoltaic Cogeneration System," paper presented at American Public Power Association Engineering and Operations Workshop in New Orleans, La., Mar. 19, 1981,
11. Cole, Roger L., et al., *Design and Installation Manual for Thermal Energy Storage* (Argonne, Ill.: Argonne National Laboratory, ANL-79-15, 2d cd., January 1980).
12. Cummings, A. B., and Morris, J. A., *Technical Supplement to the American Public Power Association Report on Cogeneration and Small Power Production* (Phoenix, Ariz.: Salt River Project, March 1981).

13. Curtice, David, et al., Study of Dispersed *Small Wind Systems /interconnected With a Utility Distribution System, Interim Report* (Palo Alto, Calif.: Systems Control, Inc., RFP-3093/94445/3533/80/7 UC-60, March 1980).
14. Curtice, David, and Patton, James, *Operation of Small Wind Turbines on a Distribution System, Final Report* (Palo Alto, Calif.: Systems Control, Inc., RFP-31 77-2 UC-60, March 1981).
15. Dawson, Douglas, Southern California Edison Co., private communication to OTA, November 1981.
16. Decision Focus, Inc., *Integrated Analysis of Load Shapes and Energy Storage* (Palo Alto, Cal if.: Electric Power Research Institute, EPRI EA-970, March 1979).
17. DOW Chemical Co., et al., *Energy Industrial Center Study* (Washington, D. C.: National Science Foundation, June, 1975).
18. Edison Electric Institute, *Cogeneration—Concepts and Systems* (Washington, D. C.: Edison Electric Institute, 07-80-06, 1980).
19. "Electric Power Generation," *McGraw-Hi// Yearbook of Science and Technology (New York:* McGraw-Hill Book Co., 1980).
20. Electric Power Research Institute and Jet Propulsion Laboratory, *Interim Working Guidelines and Discussion Concerning the Interface of Small Dispersed Photovoltaic Power Producers With Electric Utility Systems* (Palo Alto, Calif.: Electric Power Research Institute and Jet Propulsion Laboratory, draft, August 1981).
21. Fagenbaum, Joel, "Cogeneration: An Energy Saver," *IEEE Spectrum,* August 1980, pp. 30-34.
22. Geller, Howard S., *The /interconnection of Cogenerators and Small Power Producers to a Utility System* (Washington, D. C.: Office of the People's Counsel, February 1982).
23. General Electric Co., *Cogeneration Technology Alternatives Study (CTAS)– Volumes I-VI (Cleve*land, Ohio: National Aeronautics and Space Administration, Lewis Research Center, and Washington, D. C.: U.S. Department of Energy, DOE/ NASA/0031-80/I-6, May 1980).
24. Griffin, Clayton, Georgia Power Corp., private communication to OTA, September 1981.
25. Hassan, M., and Klein, J., *Distributed Photovoltaic Systems: Utility Interface Issues and Their Present Status* (Washington, D. C.: U.S. Department of Energy, DOE/ET-20356-3, September 1981).
26. ICF, Inc., *A Technical and Economic Evaluation of Dispersed Electric Generation Technologies,* contractor report to OTA, October 1980.
27. Institute of Gas Technology, "Phosphoric Acid Fuel Cells," ch. 3 in *Handbook of Fuel Cc// Performance* (Washington, D.C.: U.S. Department of Energy, May 1980).
28. Kalhammer, F. R., "Energy-Storage Systems," 241 *Scientific American 56-65,* December 1979.
29. Kammer, W. A., *A Preliminary Analysis of the Impact on Utility Distribution Systems of Power Feedback From Residential Photovoltaic Systems* (Washington, D.C.: U.S. Department of Energy, ATR-79(7694-07)-2, March 1979).
30. Koepfinger, Joe, Dusquesne Power & Light, private communication to OTA, September 1981.
31. Lawn, John, "Cogenerators See New Promise, Face Old Problems," *Energy Management,* December 1980/January 1981, pp. 43-48.
32. Marciniak, T. J., et al., *An Assessment of Stirling Engine Potential in Total and Integrated Energy Systems* (Argonne, Ill.: Argonne National Laboratory, ANL/EN-76, February 1979).
33. Mathtech, Inc., *An Analysis of the Application of Fuel Cells in Dual Energy Use Systems, Volumes I and II* (Palo Alto, Calif.: Electric Power Research Institute, EM-981 and EM-981-SY, February 1979).
34. Misailidis, C. A., Pacific Gas & Electric Co., private communication to OTA, July 1981.
35. Mitchell, Ralph C., III, Arkansas Power & Light, private communication to OTA, November 1981.
36. Nagel, T. J., American Electric Power Service Corp., private communication to OTA, November 1981.
37. "NRECA Advises Million Dollar Insurance," 51 *Alternative Sources of Energy* 34-5, October 1981.
38. Office of Technology Assessment, U.S. Congress, *Application of Solar Technology to Today's Energy Needs, Volumes I and II,* OTA-E-66 and OTA-E-77 (Washington, D.C.: U.S. Government Printing Office, June 1978 and September 1978).
39. Patton, James, *Survey of Utility Cogeneration Interconnection Practices and Cost—Final Report* (Washington, D.C.: U.S. Department of Energy, DOE/RA/29349-01, June 1980).
40. Patton, James, and Iqbal, S., *Small Power Producer Interconnection Issues and Costs* (Argonne, Ill.: Argonne National Laboratory, Februrary 1981).
41. Peoples, Graydon, and Chalmers, Steve, "Residential Solar Voltaic System Studied," *Transmission and Distribution,* September 1981, pp. 56-59.
42. Resource Planning Associates, Inc., *Cogeneration: Technical Concepts, Trends, Prospects* (Washington, D.C.: U.S. Department of Energy, DOE-FFU-1703, September 1978).
43. Ross, Blair A., American Electric Power Service Corp., private communication to OTA, October 1981.
44. Ross, Blair A., "Cogeneration and Small Power

Production Facility Effects on the Electric Power System," paper presented at Federal Energy Regulatory Commission conference on Cogeneration and Small Power Production Rules, June 1980.

45 Ross, Marc H., and Williams, Robert H., "Industrial Cogeneration: Making Electricity With Half the Fuel," ch. 10 in *Our Energy: Regaining Control (New* York: McGraw-Hill Book Co., 1981).

46 Salt River Project, *Management Proposal Regarding Small Power Production and Cogeneration Facilities* (Phoenix, Ariz.: Salt River Project, December 1980).

47 Solar Turbines, International., *Alternate Fuels for Gas Turbines* (San Diego: Solar Turbines International, 79 177A, 1979).

48 Solar Turbines International, *Turbomachinery Systems for Low Heating Value Gas Fuels* (San Diego: Solar Turbines International, 80197, 1980).

49. Southern California Edison Co., *Guidelines for Operating, Metering, Protective Relaying for Cogenerators and Small Power Producers* (Rosemead, Cal if.: Southern California Edison Co., June 1981).

50 Stambler, Irwin, "New Breed of Combined Cycle Plants—4 to 11 Megawatts," *Gas Turbine World,* JULY 1980.

51 Streb, Alan J., "Cogeneration-What's Ahead?" *Energy* Engineering, April/May 1980, pp. 11-23.

52, Theodore Barry & Associates, *Guidelines To Assist Rural Electric 'Cooperatives Fulfill the Requirements of Sections 201 and210 of PURPA for Cogeneration and Small Power Production* (Washington, D. C.: National Rural Electric Cooperative Association, March 1981).

53 Thermo Electron Corp., *Analysis of Cogeneration Systems Applicable to the State of New jersey* (Waltham, Mass.: Thermo Electron Corp., TE5486-103-80, December 1979).

54, Thermo Electron Corp., *Venture Analysis case Study–Steam Rankine Recovery Cycle Producing Electric Power From Waste Heat* (Waltham, Mass.: Thermo Electron Corp., TE4231 -117-78, December 1978).

55. United Technologies Corp., *Cogeneration Technology Alternative Study (CTAS)– Volumes /-V/* (Cleveland, Ohio: National Aeronautics and Space Administration, Lewis Research Center, and Washington, D. C.: U.S. Department of Energy, DOE/NASA/0030-80/l-6, January 1980),

56. U.S. Bureau of the Census, *Statistic/ Abstract of the United States 1981* (Washington, D. C.: U.S. Government Printing Office, 1981).

57. Whittaker, George, Russell Electric, private communication to OTA, September 1981.

58. Widmer, Thomas F., Thermo Electron Corp., private communication to OTA, September 1981.

59. Wilkinson, Bruce W., and Barnes, Richard W., (eds.), *Cogeneration of Electricity and Useful Heat (Boca* Raton, Fla.: CRC Press, Inc., 1980).

60. Williams, Robert H., "Industrial Cogeneration, " 3 *Annual* Review *of Energy* 313-356 (Palo Alto, Calif.: Annual Reviews, Inc., 1978).

61. Williams, Robert H., Princeton University, private communication to OTA, October 1981.

62. Williams, Robert H., Princeton University, "Biomass Cogeneration as a Major Option in the Swedish Context," draft report, October 1982.

63. Wilraker, V. F., et al., *Photovoltaic Utility/Customer Interface Study* (Albuquerque, N. Mex.: Sandia National Laboratory, SAND-80-7061, December 1980),

64. Zastrow, Orville, *Report on Study of Problems Associated With Interconnection of Wind Generators With Rural Electric Distribution Lines* (Washington, D. C.: National Rural Electric Cooperative Association, 1980).

Chapter 5

Industrial, Commercial, and Rural Cogeneration Opportunities

Contents

Page

Industrial Cogeneration 171
Industrial Cogeneration Technologies and Applications 171
Potential for Industrial Cogeneration 178
Market Penetration Estimates 184

Commercial Cogeneration 189
Previous Studies of Commercial Cogeneration. 189
Critical Assumptions and Limits of the DELTA Model 191
Commercial Cogeneration Opportunities . . . 198

Rural Cogeneration 210
Potential Applications 211
Fuel Savings 213
Summary 215

Chapter 5 References 216

Tables

Table No. Page

31. Fuel Utilization Characteristics of Cogeneration Systems 172
32 Cogeneration Projects by Region 179
33 Existing Industrial Cogeneration by SIC Code 179
34 Sample Industrial Electric Rates by State.. 182
35 Early Estimates of the Potential for industrial Cogeneration. 185
36. Range of Utility Buyback Rates Analyzed by RPA. 187
37. Typical Days Used in the DELTA Model . . 192
38. Fuel Prices 196
39. Technology Characteristics 197
40. Sample Utility Configurations 198
41. Description of Scenarios Used 199
42. New Capacity installed for Coal-Limited Scenarios 201
43. Capacity Factors for Baseload and Cogeneration Plants 202
44, Base-Case Standard Scenario Fuel Use, by Generation Type and Year 206
45. Comparison of Fuel Use for Coal-Limited Scenarios 209
46. Distribution of Waste Heat From a Supercharged Diesel Engine 210
47. Model Community Gasification/Diesel Electric Generation Energy Cost Estimate 214

Figures

Figure No. Page

45. Potlatch Corp. –Schematic of the Cogeneration System 173
46. Celanese Chemical Co./Southwestern Public Service Co.—Schematic of the Cogeneration System 173
47. Gulf States Utility Co.-Schematic of the Cogeneration System 174
48. Union Carbide Corp.—Schematic of the Cogeneration System 174
49. Holly Sugar Corp. –Schematic of the Cogeneration System 175
50. Riverside Cement Co.–Schematic of the Cogeneration System 175
51. Cogeneration Potential at California State Facilities 191
52. Comparison of Electric Demand for Three Types of Days.... 193
53. 1990 Heating Demands for Scenario 1 .. 194
54. 1990 Cooling Demands 195
55. Electrical Capacity Additions 1990-2000 . . 200
56. Thermal Supply and Demand for Winter Peak Day 203
57. Electricity Supply for Winter Peak Day . . . 203
58. Fuel Used in 1990 and 2000 for Coal-Limited Scenarios 208
59. Ethanol Cogeneration With Diesel Engine Waste Heat Recovery 212
60. Anaerobic Digester System. 215

Chapter 5
Industrial, Commercial, and Rural Cogeneration Opportunities

INDUSTRIAL COGENERATION

Large amounts of fuel are used to produce thermal energy for U.S. industries and this energy represents a potential for fuel savings through cogeneration. Industrial cogeneration is firmly established as an energy supply option in the United States, with a total installed capacity of about 9,000 to 15,000 megawatts (MW), or about 3 percent of the total U.S. electricity generating capacity (1 2). Industrial cogeneration currently saves at least 0.5 Quad of fuel each year.

The onsite production of electricity in industry (not necessarily cogeneration) has declined steadily throughout the 20th century. This decline was the result of a number of economic and institutional considerations that made it more advantageous for industries to buy electricity from utilities than to generate it themselves. At the same time, however, the technical potential for cogeneration (the number of industrial sites where the demand for thermal energy is sufficient to justify a cogeneration system) has been growing, and today may be as high as 200 gigawatts (GW) of capacity (equal to about 33 percent of total U.S. electricity generating capacity; see below). But, just as economic and institutional issues were responsible for the decline of onsite generation during the 20th century, these issues, rather than technical constraints, mean that the market potential (the number of sites at which investment in cogeneration will be sufficiently attractive) is much lower than the technical potential–perhaps 40 to 100 GW by 2000.

Industrial cogeneration systems may use any of the possible technology and fuel combinations described in chapter 4. These systems generally are smaller than baseload utility powerplants, but still vary considerably in size. Examples of proposed cogeneration units now under consideration illustrate this range: A 125-kW wood-fired unit being built in Pennsylvania to burn the scraps from a furniture company plant; a 5.8-MW combustion turbine system being built to serve a boxboard company on the west coast; a 60-MW biomass- and coal-fired system proposed for a pulp and paper mill in northern Mississippi; and a 140-MW coal-burning unit proposed by a major oil company to serve a complex of refineries and chemical plants on the gulf coast of Louisiana. This section will describe the industrial cogeneration technologies and applications, discuss the criteria for implementing an industrial cogeneration system, and review estimates of the market potential for industrial cogeneration.

Industrial Cogeneration Technologies and Applications

The cogeneration systems in place today primarily use steam turbine technology in a topping cycle. Steam is raised in a high-pressure boiler and then piped through a turbine to generate electricity before heat is extracted for the industrial process (see ch. 4). The thermal output of the turbine generally ranges from less than 50 to over 1,000 psig, which is appropriate for many types of industrial steam processes. The steam turbine topping cycle is extremely versatile, in that it can use any fuel that can be burned in a boiler; oil, gas, coal, and biomass are routinely used. But when the steam turbine technology is used for cogeneration, only 5 to 15 percent of the fuel is turned into electricity. Thus, these cogenerators usually are sized to fit an industry's steam load, and they produce less electricity than other cogeneration technologies.

The measure of the ability of cogeneration technologies to produce electricity is the ratio of electrical output (measured in kWh) to steam output (measured in million Btu), or the electricity-to-steam (E/S) ratio. A steam turbine cogenerator will produce 30 to 75 kWh/MMBtu, For some industries, this is only enough electricity to satisfy onsite needs, but, in others a modest amount may be available for export offsite as well. Higher E/S

ratio technologies that have been proven in industrial uses are combustion turbines, diesels, and combined cycles. The combustion turbine can generate two to seven times as much electricity with a given quantity of fuel as the steam turbine, and the diesel five to twenty times as much. Combined-cycle systems perform in a range between combustion turbines and diesels. Typical E/S ratios for these technologies are given in table 31 (see also ch. 4). Shifts in future cogeneration projects to these higher E/S systems would increase the amount of electricity that could be provided to the grid, and would save more fuel than with the use of lower E/S technologies.

Fuel savings is one important advantage of cogeneration. All of the proven cogeneration technologies use about 50 to 60 percent as much fuel to generate a kilowatt-hour of electricity (beyond the fuel otherwise needed to produce process steam) as is required by a conventional steam generating station. Whereas a central station powerplant requires 10,000 to 11,000 Btu/kwh, the proven cogeneration systems require only about 4,500 to 7,500 Btu/kWh (see table 31). There is no particular fuel savings in the steam production part of the cogeneration process; raising steam by cogeneration usually is allocated the same amount of fuel as required by a conventional boiler. Therefore, overall fuel savings are roughly proportional to the total electricity production achievable with each technology.

However, while the higher E/S technologies produce more electricity and save more fuel than the standard steam turbines, their fuel versatility is more limited. Higher E/S systems can only use liquid or gaseous fuels of uniform composition and high purity, or turbine parts or engine parts may be corroded or eroded. Although there is some experimental work with coal and coal-derived fuels for use in high E/S cogeneration technologies, the only proven cogeneration technology using coal today is the steam turbine. Some of the technologies under development that could use coal in industrial applications are discussed below.

Table 31.—Fuel Utilization Characteristics of Cogeneration Systems

	Heat rate[a] (Btu/kWh)	Second law efficiency[b]	E/S ratio (kWh/MhfBtu)
Steam turbine	4,500-6,0(N)	0.40 (0.32)	30-75
Combustion turbine	5,500-6,5fxl	0.47 (0.34)	140-225
Combined cycle	5,000-6,000	0.49 (0.35)	175-320
Diesel	6,000-7,500	0.46 (0.35)	350-700

[a] The fuel required to generate elactrklty, In excess of that required for process steam production alone, assuming a boiler efficiency of 88 percent for process steam production.
[b] %he second law efficiency for separate process steam and central station electricity generation Is shown In parentheses (see ch. 4).

SOURCE: Office of Technology Assessment from material in ch. 4.

Systems Design

The characteristics of presently employed systems vary enormously. Rather than try to generalize the system configurations that might be used in different industries, six examples of successfully operating cogeneration plants are described briefly below.

A **pulp and paper industry** cogeneration system at the Potlatch Corp. plant in Lewiston, Idaho, burns various woodwastes and the "black liquor" from the first stage of the pulping operation, plus natural gas. This plant began to cogenerate in 1951, when the company installed a 10-MW steam turbine, which was supplemented by another 10 MW of capacity in 1971. The cogeneration system produces steam at both 170 and 70 psig, plus 23 percent of the plant's electrical needs. The system generates less than' the electric load needed onsite because of the extremely low retail electricity rates and purchase power rates in the region (see tables 19 and 34), but will be upgraded in the 1980's with an additional 30 MW of capacity, at a cost of $89 million (1980 dollars), to supply almost all the onsite demand. The system is extremely reliable, operating 24 hours per day 360 days per year, giving a system availability of over 90 percent. Electrical efficiency (fraction of fuel Btu converted to electricity) is 64 percent, and the maintenance cost is 3 to 4 milIs/kWh (29). A schematic of the cogeneration system is shown in figure 45.

An example of a chemicai industry cogeneration system, that is sized to export electricity to the grid, is the system installed by the Celanese Chemical Co. at its Pampa, Tex., plant in 1979. The system burns pulverized low-sulfur Wyoming coal in two large high-pressure boilers, each

Figure 45.—Potlatch Corp.—Schematic of the Cogeneration System

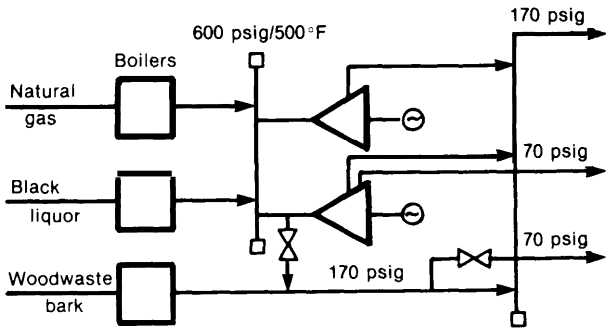

SOURCE: Synergic Resources Corp., *Industrial Cogeneration Case Studies* (Palo Alto, Calif.: Electric Power Research Institute, EPRI EM-1531, 1980).

Figure 46.—Celanese Chemical Co./Southwestern Public Service Co.—Schematic of the Cogeneration System

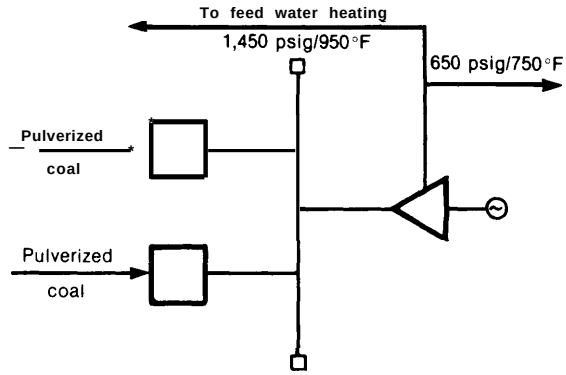

SOURCE: Synergic Resources Corp., *Irrdustr/a/ Cogenerator* Case *Stud/es* (Palo Alto, Cahf : Electric Power Research Institute, EPRI EM.1531, 1980).

producing 650,000 lb/hr of steam. After passing through a 30-MW steam turbine, the output steam is available (at 650 psig) for use in the plant. The boilers produce about 20 percent more steam than the plant needs, so the extra is used to heat the system's feedwater. The extra steam could be used for plant expansion in the future (29).

The Celanese Chemical Co. shares ownership of this system with a utility. The arrangement may be unique. The turbine and all the electricity produced are owned by the local utility, Southwestern Public Service Co., while the boiler and the steam it produces are owned by Celanese. The chemical company sells steam to the utility, which in turn sells electricity to Celanese at a favored rate—2.6¢/kWh including an 0.53¢/kWh standby charge. Without cogeneration, the company would have paid 3¢/kWh for retail electricity. (Rates quoted are for 1978.) The rate of return on this arrangement is expected to be over 20 percent for Celanese and over 15 percent for Southwestern Public Service. The cost of the system was $70 million (1979 dollars), the bulk of which was for coal conversion equipment (the plant previously used natural gas to raise steam). Operating and maintenance (O&M) costs are about 2.7 mills/kWh. The annual capacity factor for the system, including 2 to 4 weeks of planned downtime for maintenance, has been 72 percent (29). The system, for which a schematic is given in figure 46, operates to follow the electrical load.

One of the oldest ongoing cogeneration projects in the country serves a major **petroleum refinery,** as well as a chemical manufacturer that produces ethyl lead for increasing gasoline octane. The system (Louisiana Station #l at Baton Rouge, La.) was built by the Gulf States Utility Co. in 193o and upgraded several times over the decades to a present capacity of 129 MW of electricity and 3.6 million lb/hr of steam. It has now been cogenerating successfully for almost half a century with only one unscheduled outage (during an electrical storm in 1960) (29).

This cogeneration plant uses natural gas and refinery waste gas as fuel for its boilers, which produce both 600 and 135 psig steam for sale by the company to its industrial customers. The overall efficiency of the system is 73 percent, and the industrial customers consider the system extremely reliable. Exxon, the refinery owner, has a 7-year contract for steam supply. The utility sells both the electricity and steam from the station (sale of the steam is unregulated), and the industrial users provide most of the fuel and pay the operating costs (29). **Figure 47 presents a diagram of the Gulf States system.**

Due to natural gas price increases, Louisiana Station #1 may be phased out soon. Until 1979, Gulf States had long-term gas contracts for **$0.30/MMBtu, and** when these contracts expired **the price rose to $2.60/MMBtu. At the same time that** their fuel prices were increasing, energy conservation by their industrial customers substantially reduced the demand for steam, which now

Figure 47.—Gulf States Utility Co.—Schematic of the Cogeneration System

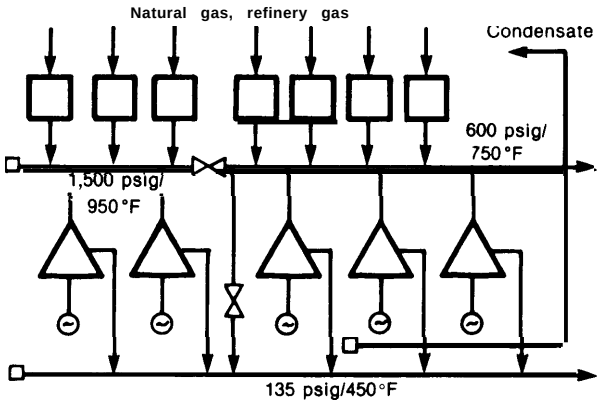

SOURCE: Synergic Resources Corp., *Indusfrial Cogeneration Case Studies* (Palo Alto, Callf Electrlc Power Research Institute, EPRI EM-1531, 1980)

stands at one-half or two-thirds of the level that prevailed 2 to 3 years ago, according to Gulf States (29).

Gulf States reports that it is not in a position to raise the capital for a new system easily (the most recently added increment of capacity is now 27 years old), so the present system may be retired and a new one built by Exxon. Exxon is planning a 150- to 180-MW coal-fired cogenerator nearby. The proposed new cogeneration plant would produce 6 million to 8 million lb/hr of process steam and potentially could supply more industrial customers than the existing system.

Another cogeneration system associated with a chemical company in the southern part of the country is the Texas City, Tex., plant of the Union Carbide Corp. The Texas City cogeneration system is owned by the chemical company, which produces a wide variety of products from alcohols to plastics, and uses natural gas for fuel. The system is a complex network of both steam and combustion turbines that was started in 1941. It produces up to 70 MW of electricity, but historically has not sold any for use offsite due to regulatory restrictions, The peak demand for the plant is 40 MW. Union Carbide reports that it is satisfied with its return on investment, but that rising natural gas prices make future cogeneration questionable, especially with combustion turbines, Union Carbide is now concentrating on conservation through heat recovery applications and waste heat utilization, rather than cogeneration (29). This system is sketched in figure 48.

The operating patterns of food plants are considerably different from those of chemical or pulp plants. An example of a food plant that only operates 4 months per year is the Holly Sugar Corp. plant at Brawley, Cal if. The plant's 7.5-MW steam turbine system provides all the steam and electricity needed onsite. The company reports that it installed the cogeneration system for economics and reliability—there had been interruptions in **power when it drew electricity from the local grid. Now the system is isolated from the grid and operates to provide the electrical load required for the plant. Holly Sugar** reports that reliability is very high (99,9 percent) for the 120 days per year that the plant operates. The reported annual capacity factor is expectedly low for such a plant schedule—25 percent. This may be too low for economic cogeneration under most circumstances, but the alternative is charges for utility-generated power during the summer months, which would be seasonably high—a factor that improves cogeneration economics (29). A schematic for the system is shown in figure 49.

Figure 48.—Union Carbide Corp.—Schematic of the Cogeneration System

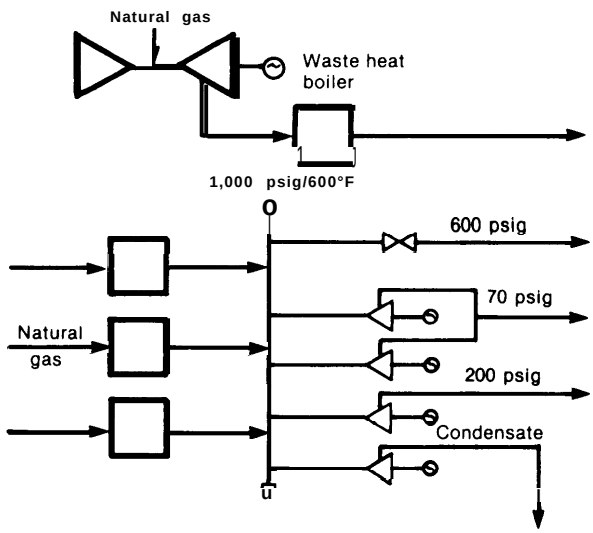

SOURCE: Synergic Resources Corp., *Industrial Cogeneration Case Studies* (Palo Alto, Calif,: Electric Power Research Institute, EPRI EM.1531, 1980)

Figure 49.—Holly Sugar Corp.—Schematic of the Cogeneration System

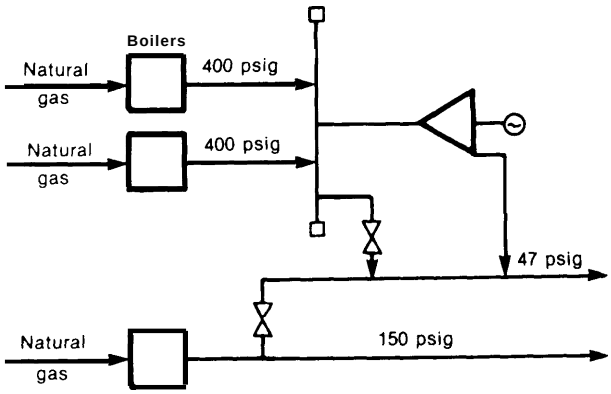

SOURCE: Synergic Resources Corp., *Industrial Cogeneration Case Studies* (Palo Alto, Calif.: Electric Power Research Institute, EPRI EM-1531, 1980).

Figure 50.— Riverside Cement Co.—Schematic of the Cogeneration System

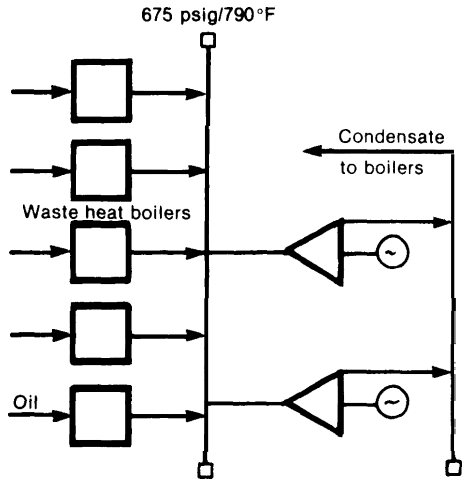

SOURCE: Synergic Resources Corp., *Industrial Cogeneration Case Studies* (Palo Alto, Calif.: Electric Power Research Institute, EPRI EM-1531, 1980).

An example of a bottoming-cycle cogenerator is the system at the Riverside Cement Co. plant at Oro Grande, Calif. The plant has five waste heat boilers to recover energy from its cement kiln exhaust gases. These produce 100,000 lb/hr of steam for cogeneration via steam turbines. Because the production of steam in the waste heat boilers varies with the production rate of the cement kilns, the system also has two oil-fired boilers for use when the output of the waste heat boilers diminishes. At present, oil provides 21 percent of the energy for cogeneration. **In order to reduce its oil consumption (the cement kilns operate on coal and natural gas), the company plans to add two additional waste heat boilers. The company reports that the system (see fig. 50) normally operates 24 hours per day, 365 days per year, and that there have been** only two brief unscheduled outages since 1954. Because 80 percent of the energy that is used for cogeneration would otherwise be wasted, system efficiency calculations are not significant in this situation (see discussion of bottoming cycles in ch. 4). The cogeneration capacity available to the local utility is 15 MW (29).

Advanced Systems

Most of **the existing cogeneration systems described above are limited to the use of clean premium fuels such as natural gas and distillate** fuel oil, which are much more expensive than alternative solid fuels, and which may be in short supply in the coming decades. The only proven technology appropriate for a wide range of industrial sites that can use solid fuels (e.g., coal, biomass, urban refuse) is the steam turbine topping cycle, which has limited electrical production for a given amount of steam. However, a number of technologies now under development offer more fuel flexibility for cogeneration than the steam topping turbine with a conventional boiler.

The primary problem with these emerging technologies is the difficulty in handling and storing the solid fuel and disposing of its ash. Compared with the ease of handling traditional liquid and gaseous fuels, solid fuels—particularly coal—are cost intensive and complex to use. Small, medium-sized, and perhaps even large industrial plants would prefer to avoid the investment and operating costs associated with burning coal. These factors are likely to limit conventional coal cogeneration systems to units 30 to 40 MW or larger, according to sources surveyed by OTA.

CENTRAL GASIFIER, REMOTE GENERATION SYSTEMS

An alternate system now under intensive development would eliminate the need for industrial firms to handle coal on their plant sites. Utilizing a central gasifier to serve a region, it

would be possible to provide medium-Btu gaseous fuel to 50 to 100 industrial plants. Medium-Btu gas has an energy content between that of low-Btu power gas and synthetic natural gas (see ch. 4). It can be transported economically over a reasonable distance, and is cheaper than premium synthetic natural gas. Onsite, the industrial plants associated with such central gasifiers would only have relatively compact cogeneration systems that would entail no more accessory buildings and equipment than present oil or gas fueled cogeneration systems. A central

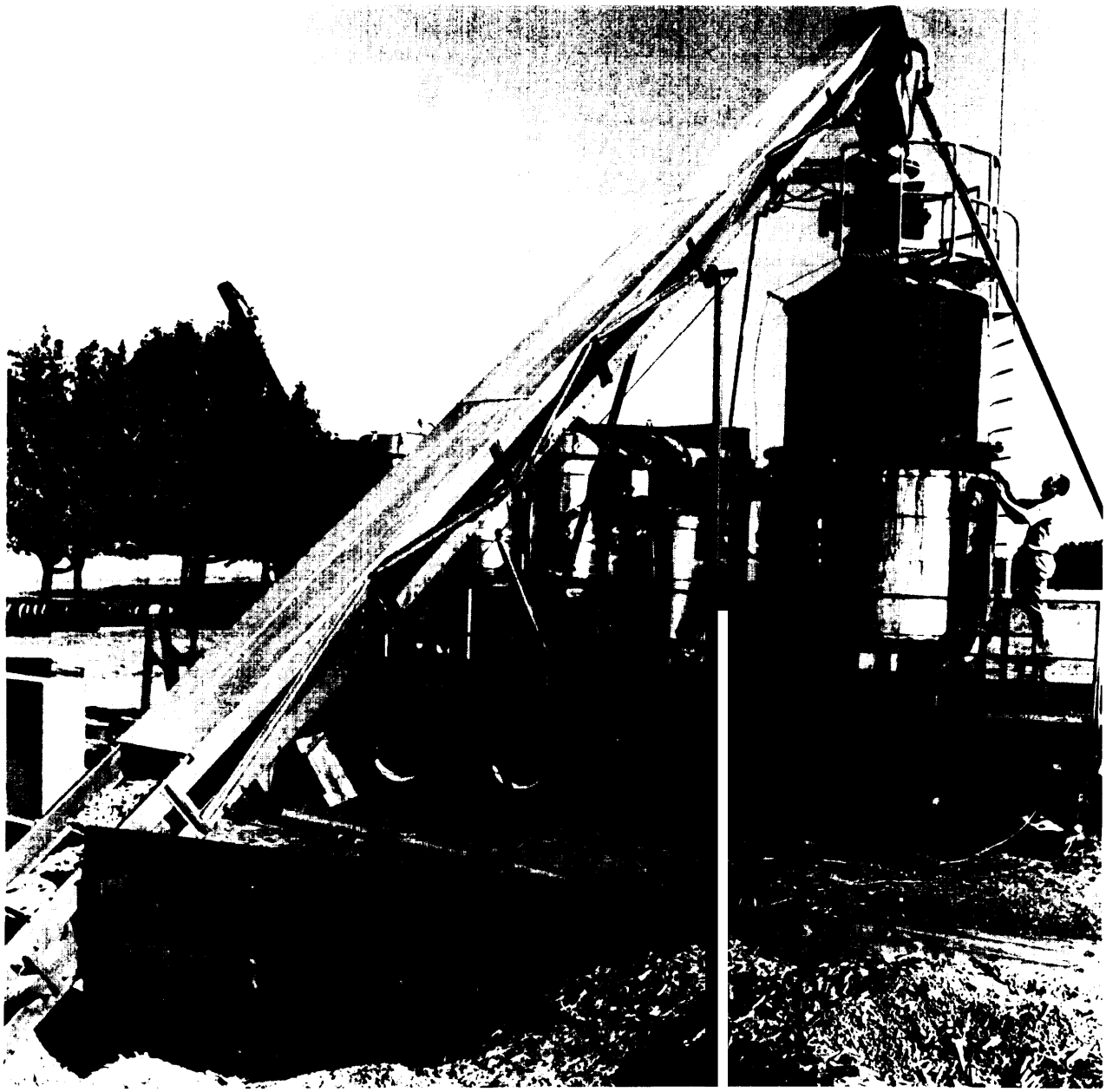

Photo credit: Department of Energy, Schneider

A prototype downdraft, airblown gasifier using wood chips as the fuel

gasifier that produced medium-Btu gas (about 300 Btu per standard cubic foot) could serve a region up to about 100 miles in radius—the distance over which medium-Btu gas can be transported economically.

An example of the central gasifier/remote generation concept is the system proposed for central and southern Arkansas to serve as many as 35 industrial sites from a central coal gasification facility located at the Arkansas Power& Light Co. (AP&L) White Bluff coal-fired generating station. The initial central gasifier module would burn petroleum coke or Illinois #6 coal to produce approximately 120 billion Btu of gas per day. The as-spent cost of this module, for a design and construction time of 76 months, and with commercial operation beginning in mid-1988, is estimated at $1.8 billion. This initial module could supply fuel for combined-cycle cogenerators that would produce 400 to 475 MW of electricity and 1.6 million to 2 million lb/hr of steam, depending on the conditions at each industrial site. Four central gasifier modules of this size–producing 460 billion to 480 billion Btu per day of medium-Btu gas–would be required to supply the 35 industrial steam users identified by AP&L as the primary cogeneration candidates in its service area. With the central gasifier concept, these 35 cogenerators would use 6 million lb/hr of process steam and produce up to 1,700 MW of cogenerated electricity. The synthetic gas would be piped as far as 100 miles to user sites with combined-cycle cogeneration systems (14).

The medium-Btu gas for the system would be produced in a gasifier fed by streams of air or oxygen and coal/water slurry, both pumped into the system at controlled rates under pressure. Both streams enter a reactor vessel where partial oxidation of the fuel occurs, The product gas leaves the vessel at very high temperature, then passes through a series of heat exchangers that cool the gas to 400° F. Ash from the burning fuel is separated at the exit of the gasifier and directed into a water-quench that produces a glassy waste product that can be used as an asphalt filler. Because the gasifier operates above the melting temperature of the ash, the quenched ash is inert and the plant does not require scrubbers.

A 150-ton-per-day Texaco entrained-process gasifier (similar to that proposed by AP&L) has been operating for more than 2 years, producing synthesis gas for the Ruhr Chimie chemical plant near Oberhausen, Germany. **In addition, the Tennessee Valley Authority is building a 200-ton-per-day Texaco gasifier** at Muscle Shoals, Ala., and the Electric Power Research Institute–in conjunction with Southern California Edison Co.–is in the final stages of planning a 1,OOO-ton-per-day gasifier (the Coolwater project) that will be used to produce 100 MW of power. None of these projects is intended to cogenerate, but the technology could be used to do so (4).

FLUIDIZED BED SYSTEMS

Another advanced coal technology is the fluidized bed combustor, which can be used to burn coal or other solid fuels, including urban refuse, in a more compact system than a conventional coal boiler. The fluidized bed combustor can burn coal of any quality, including that with a high ash content, and it can operate at a temperature (1 ,500° F) only about half as high as a conventional pulverized coal boiler. At these lower temperatures, the sulfur dioxide formed during combustion can be removed easily by adding limestone to the bed, and the combustion gases may be suitable for driving a combustion turbine with minimal erosion damage, because the coal ash is softer at lower temperatures. Two types of fluidized beds currently are being developed–those that work at atmospheric pressure and those that work at considerably higher pressures (see ch. 4).

At present, fluidized bed systems are used to fire boilers, and thus can be readily used for cogeneration with conventional steam turbines. Fluidized bed systems incorporating combustion turbines, which have higher E/S ratios, are in an earlier stage of development and are just approaching commercial status. But, combustion turbines require a high-temperature gas at a pressure considerably above atmospheric pressure, so the output of an atmospheric fluidized bed combustor cannot be used as the input to the turbine. Instead, the fluidized bed output can be used in conjunction with air heater tubes for

heat recovery in the fluidized bed, and the air, delivered from the turbine compressor to be heated in these tubes, can be used to indirectly fire a combustion turbine (either open or closed cycle).

The Curtiss-Wright Corp. in Woodbridge, N. J., is offering a prototype indirectly fired system on a semicommercial basis, sized to produce 2 to 10 MW of electricity and 25,000 to 150,000 lb/hr of steam. A spokesman for the company says that 20 MW is probably the maximum feasible size for such a system using an atmospheric bed combustor, the bed size being the limiting factor. Pressurized bed systems could be larger, however. The crucial factor in this technology, according to Curtiss-Wright, is the choice of alloy for the heater tubes. These tubes pass through the bed itself, operate at temperatures up to 2,000° F, and can be subject to corrosion, oxidation, and sulfurization. After "working the bugs out" of the first few demonstration units, Curtiss-Wright plans to offer the system on a commercial basis (4).

Pressurized fluidized bed combustors have output gases that exit at high enough pressures that these gases may be used directly to drive a turbine. These systems are also just approaching commercial status. The German Babcock Co. is planning a demonstration of a medium-sized system of this type in Great Britain. The major difficulty in the successful demonstration of such systems is perfecting the technology for cleaning the fluidized bed output gas so that it does not erode the turbine blades and shorten the lifetime of the system (4).

Shell Oil Co. recently decided to build a coal-fired fluidized bed cogeneration system near Rotterdam, Netherlands, a relatively small unit that will produce 110,000 lb/hr of steam. A considerably larger fluidized bed project is being undertaken by the American Electric Power Co. (AEP) at Brilliant, Ohio. The AEP system, being built in conjunction with Babcock& Wilcox, Ltd. of Great Britain and Stal-Laval Turbin AB of Sweden, uses a pressurized fluidized bed to operate a combustion turbine topping cycle in conjunction with an existing steam turbine. The capacity of the combined system (which will not cogenerate in this instance but which would be appropriate for cogeneration applications) will be 170 MW (4).

Other technologies also are receiving attention for use with coal. The Thermo Electron Corp. has tested the performance of a two-cycle marine diesel engine fired with a coal/water slurry. The engine, which is a low-speed tanker motor (see ch. 4), could achieve in principle 40 percent efficiency in generating electricity. Coal also can be used to fuel externally fired engines such as the Stirling-cycle engine. N.V. Philips, of Einhoven, Netherlands, has initiated work in applying fluidized bed coal systems to use with Stirling engines.

Potential for Industrial Cogeneration

Cogeneration's market potential depends on a wide range of technical, economic, and institutional considerations, including a plant's steam demand and electric needs, the relative cost of cogenerated power, the fuel used and its cost, tax treatment, rates for utility purchases of cogenerated electricity, and perceived risks such as regulatory uncertainty. The criteria for investment in an industrial cogeneration system is discussed below, including a description of the industrial sectors where cogeneration is likely to be attractive, and a brief review of the industrial cogeneration projections in the literature.

Appropriate Industries

A summary of cogeneration projects by region in the United States is given in table 32. The 371 projects in this table are those that are positively identified as cogeneration systems in a recent Department of Energy (DOE) survey (12). A breakdown by industry type is given in table 33. An additional 98 projects-representing at least 3,300 MW of capacity–have been proposed, are under construction, or are being added to existing cogeneration units.

The pulp and paper industry has, for some time, been a leader in cogeneration due to the large amounts of burnable process wastes that can supply energy needed for plant requirements. Integrated pulp and paper plants find cogenera-

Table 32—Cogeneration Projects by Region

Region[a]	Number of plants	Capacity[b] (MW)
New York , ...	27	913
New York/New Jersey	23	498
Mid-Atlantic	39	1,512
South Atlantic	62	2,200
Midwest	89	3,176
Southwest	57	4,812
Central	14	259
North Central.	14	413
West	25	629
Northwest	21	445
Total	371	14,858

aStandard EIA/DOE regions.
bTotal may not agree due to rounding.

SOURCE: General Energy Associates, *Industrial Cogeneration Potential.' Targeting of Opportunltles at the Plant Site* (Washington, DC.: U.S. Department of Energy, 1982).

tion particularly attractive. These plants dispose of woodwastes (e. g., bark, scraps, forestry residues unsuitable for pulp) and processing fluids ("black liquor"), and recover process chemicals in furnaces that can supply about half of a plant's energy needs. For at least two decades, the industry has considered power production an integral part of the manufacturing process, and new pulp and paper plants are likely candidates for cogeneration.

The chemical industry is another major steam-using industry that has great cogeneration potential. It uses about as much steam per year as the pulp and paper industry (1.4 Quads in 1976) and historically has ranked third in installed cogeneration capacity. The **steel industry** is also a major cogenerator, because the off-gases from the open-hearth steel making process provide a ready source of fuel, which is burned in boilers to make steam for blast furnace air compressors and for miscellaneous uses in the rest of the plant. Although the steel industry has been a major cogenerator in the past, most analysts project that it will not build more integrated stand-alone plants. Instead it is expected to build minimills that run with electric arcs and have little or no potential for cogeneration unless a market can be found for the thermal energy. Thus, new steel mills probably have considerably less cogeneration potential than the chemical industry. However, on the gulf coast substantial cogeneration capacity has been proposed for existing primary metals facilities (34)$_0$

petroleum refining also is an industry that is, in many ways, ideal for cogeneration. Existing refineries could be upgraded over the next

Table 33.—Existing Industrial Cogeneration by SIC Code

SIC code	Number	Percent of total	Capacity (MW)	Percent of total
20—Food	42	11.3%	398	2.7
21 —Tobacco products		< 1 . 0	33	<1.0
22—Textile mill products.	9	2.4	224	1.5
23—Apparel	0			
24—Lumber and wood products.	19	5.1	479	*3.2*
25—Furniture and fixtures.	1	<1.0	2	*<1 .0*
26—Paper	136	36.7	4,246	*28.6*
27—Printing and publishing	1	<1.0		*<1 .0*
28—Chemicals.	62	16.7	3,438	*23.1*
29—Petroleum and coal products	24	6.5	1,244	*8.4*
30—Rubber, miscellaneous plastic products	3	<1.0	76	*< 1 .0*
31—Leather	—	—		—
32—Stone, clay, and glass products	6	1.6	115	< 1 . 0
33—Primary metals.	39	10.5	3,589	24.2
34-Fabricated metal products.	10	2.7	304	2.0
35—Machinery, except electrical	11	3.0	134	1.0
36—Electric and electronic equipment	3	< 1.0	83	1.0
37—Transportation equipment	1	< 1.0	345	<2.3
38—instruments and related products	3	< 1 .0	137	< 1 .0
39—Miscellaneous manufacturing	—			
Total.	371	100.0	14,858	100.0

SOURCE: General Energy Associates, *Industrial Cogeneration Potential: Targeting of Opportunities at the* Plant Site (Washington, DC,: U.S. Department of Energy, 1982).

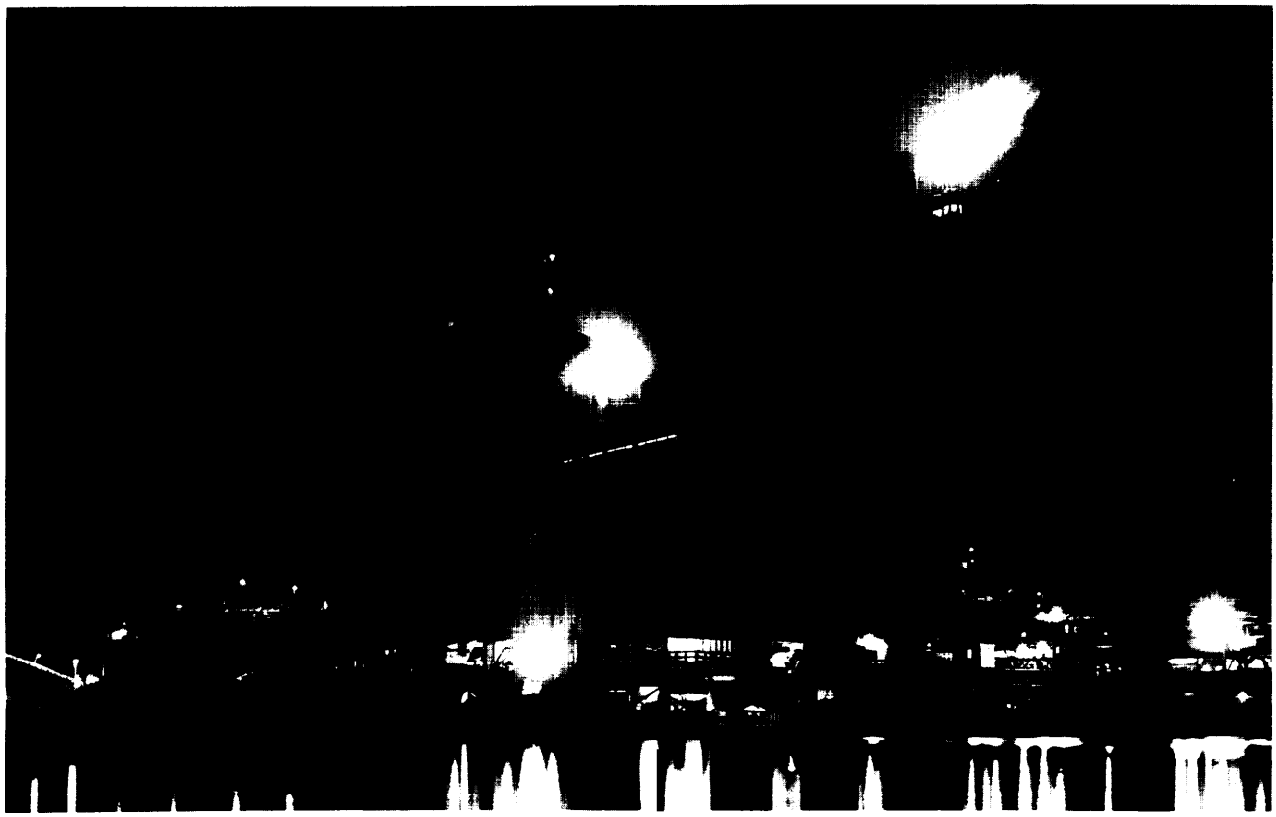

m ry m ry m g m g g

decade to increase gasoline and diesel fuel output and decrease residual oil production. A byproduct of this upgrading would be the production of low-Btu gas that might be used in cogeneration systems. One report estimates that such upgrading could produce 0.5 Quad/yr of gas, to meet about 40 percent of the refineries' 1976 process steam demand and provide 9 GW of electricity generating capacity (34). However, new refineries are not likely to be built in the near future except on the Pacific coast in conjunction with enhanced oil recovery in the Kern County heavy oilfields.

An industry in which cogeneration and conservation are in head-to-head competition is the cement industry. It has been identified as a candidate for bottoming-cycle cogeneration, an application in which the heat of the kiln exhaust gas is recovered and used to produce steam for electricity generation. **But because the industry is highly** energy intensive, it has improved its efficiency substantially in recent years, reducing the temperature of its exhaust gases from 9000 to 1,000° **F to** 300° to 400° F. One plant has reported exhaust temperatures as low as 180° F (28). In plants where conservation measures are that effective, it probably will not be economic to cogenerate.

Criteria for Implementation

A wide range of considerations must be taken into account in deciding whether to invest in an industrial cogeneration system. These include both internal and exogenous economic factors, fuel cost and availability, ownership and financing, tax incentives, utility capacity expansion

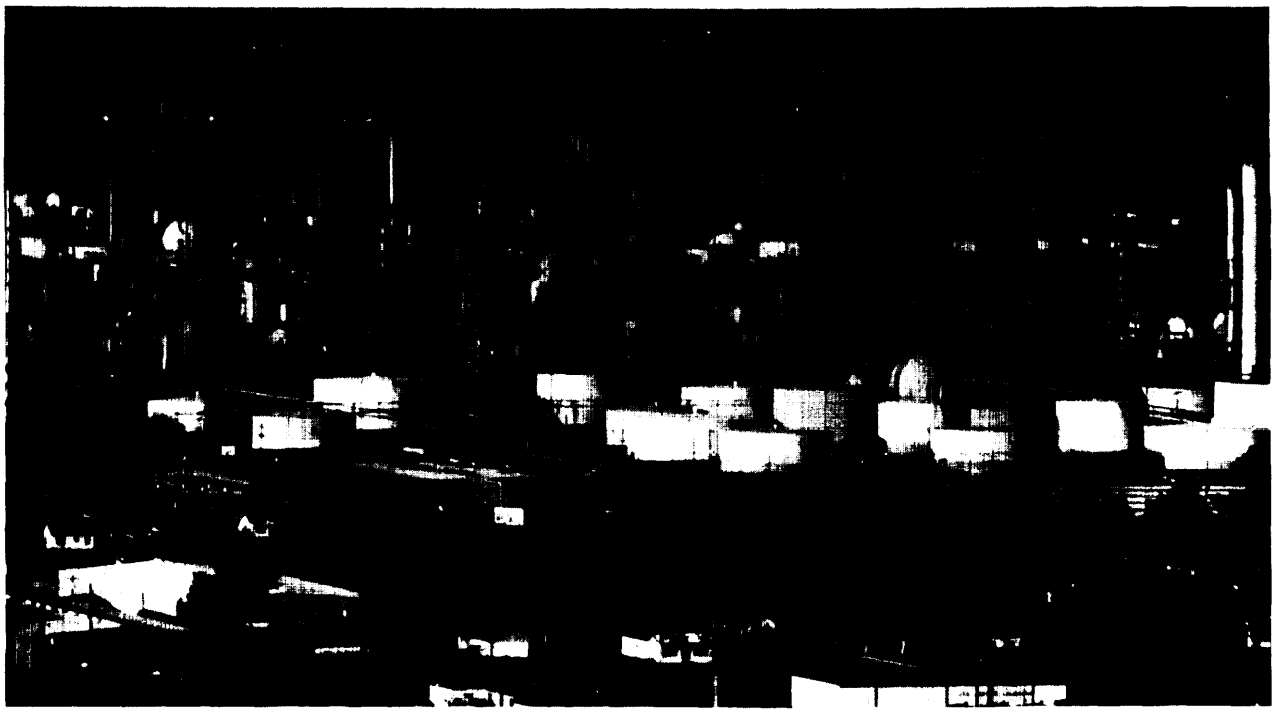

Photo credit: Department of Energy

Low-Btu gas suitable for fueling cogeneration systems is a byproduct at many petroleum refining facilities

plans and rates for purchases of cogenerated power, and a variety of perceived risks in such an investment.

ECONOMIC CONSIDERATIONS

For any potential cogenerator, the desirability of cogenerating depends on the price of power from the utility plus the cost of producing thermal energy, versus the cost of cogenerating. Historically, industrial and commercial users have paid different amounts for utility-produced power. Compared to the case for commercial cogeneration (see below), industrial facilities typically have lower electric rates, averaging up to about 1.5cents/kWh lower than commercial and residential users (see table 34) (9). Nevertheless, in some regions of the country, rates for utility purchases of cogenerated electricity have reached 8.3cents/kWh (see table 19), higher than the national average for either commercial or industrial retail electricity rates. These areas are prime targets for expanded industrial cogeneration (see discussions of purchase power rates and simultaneous purchase and sale, below).

The current costs of cogeneration for industrial users often are below the rates for utility purchases from industrial customers. A study for the Federal Energy Regulatory Commission (FERC) (28) found that the price of cogenerated electricity ranged from 4.4 to 5.6cents/kWh (1979 dollars) for various regions of the country, assuring the use of steam topping and gas turbine technologies. Diesel cogeneration was found to cost 7.2 to 7.6cents/kWh, assuming small, distillate-fired systems operating at a relatively low capacity factor. Larger systems using natural gas and operating at higher capacity factors should be able to compete at the busbar with new coal plants in many instances (34). While utility rates for purchases of cogenerated power vary widely by region (see table 19), the costs of cogeneration vary only 10 to 20 percent among the regions of the country, This is a strong indication that the rates for sales of cogenerated electricity will be important in determining the economic viability of industrial cogeneration over the next few years. More specifically, external economic factors, rather than technical breakthroughs that would reduce the intrinsic costs of cogeneration, are likely to be

Table 34.-Sample Industrial Electric Rates by State (costs per kWh for industries using 1.5 milllon kWh per year with a peak demand of 5 MW.

Alabama	3.60	Montana	1.70
Alaska	3.7	Nebraska	2.7
Arizona	4.4	Nevada	4.7
Arkansas	2.9	New Hampshire	4.8
California	5.0	New Jersey	4.4
Colorado	3.4	New Mexico	5.5
Connecticut	5.2	New York	7.6
Delaware	5.8	North Carolina	2.9
District of Columbia	3.9	North Dakota	3.5
Florida	3.1	Ohio	4.1
Georgia	3.7	Oklahoma	2.6
Hawaii	5.7	Oregon	1.7
Idaho	1.7	Pennsylvania	5.1
Illinois	4.0	Rhode Island	5.3
Indiana	3.6	South Carolina	3.6
Iowa	3.9	South Dakota	3.3
Kansas	3.9	Tennessee	3.2
Kentucky	3.0	Texas	3.7
Louisiana	2.9	Utah	3.1
Maine	3.6	Vermont	3.3
Maryland	2.7	Virginia	5.2
Massachusetts	5.2	Washington	1.1
Michigan	4.6	West Virginia	3.2
Minnesota	3.0	Wisconsin	3.5
Mississippi	3.9	Wyoming	1.5
Missouri	3.8		

aRates shown are calculated from typical bills for 455 cities with a totai population of 76.9 million as of Jan. 1, 1980. The State averages are population-based averages. The range among regions in the country is from 1.1 to 7.6 cents/kWh, as of Jan. 1, 1960.

SOURCE: Energy Information Administration, *Typical Electric Bills, January 7, 1980* (Washington, D. C.: Government Printing Office, December 1960).

the dominant factors governing the rate of cogeneration implementation in the 1980's.

In most parts of the country, the rates for purchases of cogenerated electricity do not exceed the 4.5 to 5.5cents/kWh cogeneration cost quoted above. However, the avoided cost of many utilities may be higher than industrial electricity rates. The FERC study cited above found that in many (but not all) regions of the country this was the case. in regions with high avoided costs, it would be advantageous for industrial firms to sell all their cogenerated power to the utilities and buy back as much power as they need at the industrial wholesale price. The conditions for favorable election of this option, known as simultaneous purchase and sale (or arbitrage), are discussed further below.

FUEL VERSATILITY

The fuel used for cogeneration varies with the type of technology installed and with the size of the installation. The predominant fuels are coal, biomass, natural gas, and oil–usually residual (#6) and middle distillate (#2) oil. Oil and natural gas are the most versatile fuels because they can be used in all available cogeneration technologies from the lowest E/S systems (steam topping turbines) to the highest (combined cycles and diesels). However, due to the price and supply uncertainties of oil and natural gas, over the long term (10 years and beyond) the most attractive cogeneration investments will use solid fuels. As discussed previously, of the available technologies, only steam turbines presently can use such fuels, but these systems also have relatively low fuel savings for a given steam load, and a low E/S ratio. With the advanced technologies described previously, solid fuels could be used more widely than now possible. Both the medium-Btu gasifier and the fluidized bed systems could be used with combustion turbines or combined cycles, producing electric power with a high E/S ratio from coal or biomass.

OWNERSHIP AND FINANCING

ownership arrangements may be among the principal determinants of the rate of development of cogeneration. The issue is whether cogeneration systems will be owned by the industry that uses the thermal energy, whether they will be owned by the utilities that would distribute the cogenerated electricity, or whether a third party would invest in the cogeneration equipment. Joint ventures and multiparty ventures mingling these various players also are possible (see ch. 3).

Industrial ownership could be attractive if the surplus electricity were purchased by a utility at rates that reflect the utility's full avoided costs. Also ownership could assure the cogenerating industry of reliable power, which can be a strong incentive for particular industries in some regions. However, the capital requirements of a cogeneration system are large enough that many potential industrial cogenerators would like to have long-term (i.e., 20-year) contracts for power sales to the grid. Whether this can be reasonably expected under the presently applicable laws is an important question, one that is addressed in chapter 3 of this study.

Utility ownership has the advantage that utilities consider power production their primary line of business. Utility-owned cogeneration systems could be included in the rate base, thus allowing the utility to earn a return on the systems. Utility ownership also provides a straightforward means by which utilities could maintain dispatching control over the electric power entering the grid, providing them with assurance that this new form of generating capacity would preserve system stability (see the discussion of interconnection in ch. 4). Furthermore, cogeneration's relatively small unit size can decrease the cost of capital for capacity additions and can reduce the downside risk of unanticipated changes in demand growth (see ch. 6). However, as discussed in chapter 7, unregulated utility ownership raises concerns about possible anticompetitive effects.

Third-party ownership is most likely to occur in cases where new steam-producing equipment is badly needed to cut energy costs but the industry in question cannot raise capital for a new system. Novel cogeneration financing arrangements are emerging slowly and it is risky to make generalizations so early in the process. In some cases, the third party may be a separate entity set up by the utility. In other cases, it may be a large institutional investor wooed by the industry. There appear to be few instances on the industrial scene where—as happened in the development of hydro power under the Public Utility Regulatory Policies Act of 1978 (PURPA)—a small entrepreneur identified an attractive steam load, proposed building a new plant, served as capital matchmaker, and then ran the facility. Third parties will want to reduce the risks of ownership by negotiating long-term purchase power contracts with the utilities.

TAX INCENTIVES

Significant Federal tax incentives are available to cogeneration in recognition of its fuel saving value. These include the investment and energy tax credits, accelerated depreciation, and safe harbor leasing (see ch. 3). In some cases, cogeneration may also qualify for tax-exempt financing. An informal survey by OTA indicates that these tax incentives may promote some marginal cogeneration projects from "unattractive" to "attractive," but tax considerations are not, in most cases, the overriding economic issue. Industrial power cost and reliability, PURPA avoided cost prices, and restrictions on capital from traditional sources are still the dominant economic issues. On the other hand, tax considerations can have a very strong influence on ownership and financing decisions for a cogeneration project. A key issue in cogeneration tax treatment is whether or not facilities are categorized as "public utility property." Full utility ownership is generally the least attractive tax alternative for a cogeneration project under either the 1978 or 1980 tax bills.

FLEXIBILITY IN LOAD EXPANSION

One of the major reasons that cogeneration would be attractive to utilities in the short term is its suitability for adding new capacity in small increments that are deployable in a relatively short time. Cogeneration capacity sizes in industrial settings range from 100 kw, miniscule by utility standards, to over 150 MW, about half the size of the smallest unit of baseload capacity a large utility would consider installing. Many utilities favor 300-MW coal units as small incremental additions for central plant capacity. Adding leadtime for planning, the total time to put a cogeneration facility in place is 3 to 6 years–much less than the 5- to 12-year period required for utility baseload plants. As a result, cogeneration can represent an "insurance policy" against unanticipated changes in demand growth-a much less costly form of insurance than overbuilding central station capacity.

The planned cogeneration strategy of AP&L (described above) illustrates the flexibility in capacity growth that can be attained with cogeneration. AP&L's proposed 1,700-MW remote gasification system (described above) would be based on combined-cycle units at each plant site (up to 35 sites), which would allow the utility to decouple steam and electricity production. Thus, the utility could build a system to supply the industrial steam load of its customers, and then turn on electrical capacity as needed. In this way, AP&L could gradually augment its system capacity from zero to 1,700 MW over several years in a smoothly increasing trend (14).

PURCHASE POWER RATES

The critical economic considerations in a decision whether to invest in an industrial cogeneration system include the rates and terms for utility purchases of cogenerated power. As discussed below, the utility buyback rates are a primary determinant not only of the number of cogeneration systems installed, but also of the amount of electricity they will produce. However, Federal and State policies on this issue are in great flux just now, and the regional variability in purchase rates is quite high (see ch. 3). As a result, many potential cogenerators are caught in a "squeeze" between the regulatory uncertainty surrounding sales of electricity to the grid and the desire to invest during 1982 before the energy tax credit expires.

SIMULTANEOUS PURCHASE AND SALE

The regulations implementing PURPA section 210 allow industrial cogenerators to simultaneously buy all their needed power from the utilities (at rates that do not discriminate against them relative to other industrial customers), while selling all their cogenerated electricity at the utility's purchase power rate. In effect, this provision decouples a cogenerator's thermal and electric energy production (see ch. 3). Utilities, which are seeing their load growth diminish drastically as a result of price-induced conservation, may find this option attractive because it does not reduce their load base. Moreover, industries generally are less willing to project their steam or heat loads as far into the future as utilities. Systems that allow some decoupling of steam and electric production thus have potentially greater appeal to industry, under industry ownership. industries may also find simultaneous purchase and sale attractive because it does not require them to pay standby charges for electricity they would use when the cogeneration system was shut down for maintenance or unplanned outages.

REGULATORY UNCERTAINTY AND PERCEIVED RISKS

At present, probably the greatest deterrent to investment in cogeneration systems is regulatory uncertainty. Utility rates for purchases of cogenerated power under PURPA and the FERC regulations on interconnection of cogenerators with the grid are uncertain pending a final court ruling on the existing regulations (see ch. 3). Other regulatory or legislative items that may affect cogeneration implementation but are in a state of flux include: the Fuel Use Act regulations on exemptions for cogenerators; natural gas prices, the schedule for deregulation, and its effect on incremental pricing; and the expiration of the energy tax credit at the end of 1982.

Industrial companies also are concerned about limited capital resources and high interest rates, and may favor investments in process improvements that would contribute to plant efficiency over investments in new energy systems. Companies also are hesitant to invest until the payback periods are more firmly established, given uncertainties in fuel prices. Some companies also have expressed concern about a lack of technical expertise in the use of solid fuels, as well as about the possibility of using up air pollution increments that may be needed for future plant expansions.

Market Penetration Estimates

A number of recent studies have estimated the technical and/or market potential for cogeneration based either on the Quads of energy that might be saved by the substitution of cogenerators for separate conventional electric and thermal energy systems, or on the Quads of steam and megawatts of installed capacity that could be supplied by industrial cogeneration. The range of estimates given in these studies is large, extending from 6 to 10 Quads of energy saved annually by 1985, and from 20 to 200 GW of installed generating capacity by 2000. Differing assumptions about energy prices, ownership, and return on investment, whether the cogeneration facilities would export electricity to the utility grid, and the types of technologies employed account for the large range. The early projections of the potential for industrial cogeneration are summarized in table 35.

The general methodology in each of these studies was to estimate the industrial steam load and then quantify what portion of that load would be technically and economically exploitable for cogeneration. The choice of cogeneration tech-

Table 35.—Early Estimates of the Potential for Industrial Cogeneration

Study	Ownership	Cogenerator	Off site distribution	Installed capacity in 1985 (GW)	Expected annual steam load growth
DOW	Industry	Steam turbine	No	61	3.5 % (1968-80) 4.5% (after 1980)
RPA	Industry	Steam turbine	No	10-16	4.1% (1976-85)
Thermo Electron	Industry	Steam turbine	Yes	20-34[a]	4.1 % (1975-85)
		Combustion turbine		85-128	
		Diesel		107-209	
	Utility	Steam turbine		34-37[a]	
		Combustion turbine		131-137	
		Diesel		218-249	
Williams	Utility	Steam turbine	Yes	28 (in 2000)	20/0 (1974-2000)
		Combustion turbine or combined cycle:			
		Oil-fired		28	
		Coal w/FBC		95	
		Diesel		57	
		Total		208 (in 2000)	

aThe Thermo Electron estimates assume only one technology Is developed and are thus not additive.

SOURCE: OTA from Robert H. Willlams, "Industrlal Cogeneration," 3 *Annual Review of Energy 313-3S6* (Palo Alto, Callf.: Annual Reviews, Inc., 1978).

nologies, among other considerations, then would determine the electrical capacity achievable with such a steam load. In general, those studies that assumed the use of only steam turbine topping cycles (sized so there was no offsite export of electricity) arrived at much lower estimates of cogeneration electric capacity.

A DOW Chemical Co. study (6) projected 61 GW of electrical cogeneration capacity in 1985 (including existing capacity), corresponding to about 50 percent of the projected process steam demand for that year. The DOW study assumed industrial ownership (with a 20-percent rate of return) of steam turbine topping cycles installed in plants using over 400,000 lb/hr of steam. These cogenerators would produce the minimum amount of electricity for a given steam load (about 40 kWh/MMBtu) and would not export any electricity offsite. Even with this rather conservative choice of technologies, there were instances in which the study found that more electricity would be generated than could be used onsite, and so the estimated market potential for cogeneration was scaled down accordingly.

A 1977 study by Resource Planning Associates (RPA) for DOE (24) examined the potential for cogeneration development by 1985 in six major steam-using industries (pulp and paper, chemicals, steel, petroleum refining, food, and textiles). RPA only considered applications larger than 5-MW electrical capacity and assumed that all of the cogenerated electricity would be consumed onsite. Furthermore, approximately 70 percent of the total estimated process steam available for cogeneration development in 1985 was eliminated as unsuitable for cogeneration, due to technical or economic constraints, or to conservation and process improvements. As a result, RPA found the 1985 potential in the six industries to be 1.7 Quads of process steam output (10-GW capacity) without Government action, and 2 to 2.6 Quads of process steam (12- to 16-GW capacity) with Government programs such as the energy tax credits and the more rapid depreciation now in place, or PURPA-style regulatory and economic incentives.

A study by Thermo Electron (30) was based on three of the most steam-intensive industries—the chemical, pulp and paper, and petroleum refining industries—which were assumed to account for approximately 34 percent of the total estimated 1985 industrial steam loads. This study assumed that either industry or utilities might invest in high E/S technologies such as combustion turbines and diesels, and found that the maximum implementation for combustion turbines—137 GW of cogeneration capacity–occurred with utility ownership, an investment tax credit of 25 percent (rather than the 10 percent then available), and Government financing for half the project.

38-946 O - 83 - 13 : QL 3

A 1978 study by Williams (33) assumed utility ownership, and a mix of technologies in which steam turbine cogenerators met 42 percent of the steam load and higher E/S technologies the remainder. Williams assumed that fuel use for steam generation in existing industries would increase 2 percent annually through 2000, leading to a process steam demand of **16.1 Quads in those industries. Williams also assumed that about half of the total steam demand would be associated with cogeneration having an average E/S ratio of 140 kWh/MMBtu and producing electricity 90 percent of the time that steam is produced. Based on these assumptions, Williams estimated the total cogeneration potential in 2000 to be 208 GW, saving over 2 million barrels of oil per day.**

As noted previously, each of these studies began by estimating the present demand for industrial process steam. These estimates include a 1974 steam load of 7.8 Quads (Williams, based on an Exxon analysis); a 1976 industrial steam demand of 9.7 Quads (RPA); and a 1980 estimate of about 14 Quads (DOW). In 1981, the Solar Energy Research Institute (SERI) attempted to reconcile the differences among these and other estimates of industrial steam load, and found that the data base (disaggregated by fuel use, boiler capacity, average and peak steam loads per site, steam quality, steam load by industry, steam load by State) is so inadequate that none of these published estimates could be considered accurate. However, SERI was able to reject the higher steam demand estimates in the literature because they did not account accurately for fuel use in smaller boilers in less energy-intensive industries. By reconciling differences in approach and accounting among the lower published numbers, SERI arrived at an estimate equivalent to approximately 5.5 Quads/yr during 1976-77 (27).

In addition to overestimating the base industrial demand for steam, the early studies of industrial cogeneration assumed robust steam growth-on the order of 4 percent annually. The steady progress that has been made in industrial energy conservation through the 1970's—amounting to a decrease in energy use per unit of industrial value-added of approximately 2 percent per year—makes these earlier predictions for steam load growth highly unlikely. More recent studies of cogeneration have projected steam growth rates that are either lower or constitute no growth. For instance, in 1980 SRI International projected 1.18 percent per year (28), while Williams now estimates zero growth in steam demand through 2000 (34), and SERI projected zero or negative growth (27).

More recent estimates of the potential for industrial cogeneration either have assumed a much smaller present steam base and lower thermal demand growth rates, or have devised a methodology that does not begin with an estimate of the current steam load. However, due to changes in the context for cogeneration since the earlier studies were completed, these recent studies have not necessarily projected a lower market potential for industrial cogeneration. These contextual changes include the PURPA economic and regulatory incentives for grid-connected cogeneration, substantial increases in oil and electricity prices, special energy tax credits, and shorter depreciation periods. As a result of these and other considerations, cogeneration is considered likely to be economically attractive at more industrial sites than in earlier studies (despite the lower thermal demand projections), and more likely to use technologies with higher E/S ratios that produce more electricity.

A 1981 study by RPA (23) examined the 1990 potential for cogeneration in five industries (those analyzed previously except for textiles), began with a 1990 steam demand of 682 million lb/hr (approximately 6 Quads/yr, assuming 1,000 Btu/lb and 24-hr operation). Of this base, RPA found an expected investment in the five industries of 155 million lb/hr (1 .36 Quads) steam production, or 20.8 GW of electric capacity, assuming "base case" utility buyback rates (see table 36). This would increase to 28.7 MW of installed cogeneration capacity if, as a result of utility ownership, 30 percent of the steam turbines were replaced by combustion turbines and combined cycles. The "high buyback rates" case would lead to an expected investment potential of as much as 37 GW of installed capacity, while the "low" case shows 14.2 GW (1.2 Quads steam). The amount of electric capacity declines more than the steam production with lower buy-

Table 38.-Range of Utility Buyback Rates Analyzed by RPA
(1980 dollars In cents/kWh)

DOE region	Marginal utility fuel	Low buyback rate	Base buyback rate	High buyback rate
1. New England	Oil	4.0	5.5	7.0
2. New York/New Jersey.	Oil	4.0	5.5	7.0
3. Mid-Atlantic	Oil	4.0	5.5	7.0
4. South Atlantic	Oil/coal	2.0	3.5	5.0
5. Midwest.	Coal	2.0	3.0	4.0
6. Southwest.	Natural gas	2.5	4.0	5.5
7. Central.	Coal	1.0	2.0	3.0
8. North Central	Coal	1.0	1.5	2.5
9. West.	Oil	4.5	6.0	7.5
10. Northwest	Coal	3.5	4.5	5.5

SOURCE: Resource Planning Associates, Inc., The *Potential for Industrial Cogeneratlon Development by 1990 (Cambrldge,* Mass.: Resource Plannlng Associates, 1981).

back rates due to the sensitivity of technology E/S ratio to these rates (23).

In an informal update of his earlier work, Williams (34) begun with a much lower steam demand–4.l Quads in six industries in 1977–but assumed that cogeneration would achieve a higher degree of penetration of the steam base than he had assumed earlier. Of these 4.1 Quads, Williams assumed 1.25 Quads would be unsuitable for cogeneration (due to load fluctuations, low steam demand, low-pressure waste heat streams, declining demand, etc.), resulting in a six industry market potential of 93 to 142 GW in 2000, depending on the technology mix. Williams estimated an additional potential of up to 32 to 49 GW in other industrial sectors, if their steam loads are proportional to those in the six industries, but less if their steam loads are smaller or more variable. Finally, Williams estimates that new industries (e.g., thermally enhanced oil recovery) have a potential of 11 to 20 GW of installed capacity. Together, these sources have an "economic potential" of 136 to 211 GW of cogeneration capacity in 2000. Williams considers this economic potential to be the amount available for insuring against underdevelopment of central station generating capacity. The actual amount to be designated as a "prudent planning base" for such insurance could not be determined without better disaggregated data on the steam base, but Williams found 100 to 150 GW to be a "conservative estimate" (34).

Williams' approach to cogeneration as insurance against the uncertainty in future electricity demand growth was included in the 1981 SERI report on solar/conservation. SERI did not estimate the total potential for industrial cogeneration because the report's emphasis on conservation meant that projected electricity demand growth was so low (0.13 percent annually) that no cogeneration electrical capacity would be needed unless the conservation targets were not met. The study concluded that 93 GW of cogeneration in the six industries would be an adequate insurance measure, but made no attempt to ascertain how much capacity would be economically attractive (27).

A different methodology was adopted in a 1982 **analysis for DOE** (12). Rather than using a gross estimate of steam demand as the primary measure of potential, this study began by individually analyzing the 10,000 largest U.S. industrial sites for their cogeneration potential based on buyback rates, accelerated depreciation, heat match, and other considerations. This analysis identified 3,131 plants in the 19 manufacturing sectors that would have a return on investment greater than 7 percent and represent the maximum potential of 42.8 GW of cogeneration capacity (producing 3.3 Quads of steam). Ninety-two percent of the electric capacity and 95 percent of the steam generated are in the five top steam-using industries. The "best" mix of technologies for these sites was found to be 70 percent combustion turbines and 30 percent steam turbines, resulting in the offsite export of 49 percent **of** the electricity generated. If the return on investment increased to 20 percent, the maximum potential decreases to 20 GW. The study also estimated that an additional 48.5 GW of capacity could be installed

at new industrial sites based on U.S. Department of Commerce industrial growth figures and assuming that plant expansions and new plants would have characteristics similar to those in existing plants (12).

The studies reviewed above illustrate two main points:

1. The technical potential for cogeneration is very large; even the lowest of these estimates corresponds to the equivalent of 20 new baseload central generating plants, while the highest estimate corresponds to a generating capacity capable of producing more than one-sixth of the electrical power presently used in the country.
2. Economic and institutional considerations are paramount in determining how much cogeneration will actually be installed, as illustrated by the wide sensitivity of these estimates to variations in utility purchase rates, tax incentives, ownership, fuel prices, etc. The underlying consensus among these studies on all matters except the likely steam load is in fact remarkable.

While the market for cogeneration is potentially large, the actual rate of cogeneration equipment installation is much lower than expected a few years ago. This trend is occurring in spite of higher electricity prices because of the weakened financial posture of utilities, industries' difficulty in raising capital for expansion due to unprecedentedly high interest rates, and the unexpectedly rapid rate of energy use reductions in industry. Long-term fuel supply uncertainties also may work against cogeneration, or against the more attractive cogeneration options.

The effect of energy conservation in industry is one of the key influences on future cogeneration. Whereas substantial steam load growth was assumed in most cases, the rate of energy use **per unit of production** has in fact dropped substantially in major industries. The industry that has traditionally been most committed to cogeneration as an integral part of its business, the pulp and paper industry, has reduced its energy consumption per ton of production by 26 percent between 1972 and 1980. The chemical industry has reduced its energy use by 22 percent over the same period, and the petroleum refining industry, 15 percent. Steam production at the largest operating industrial cogeneration system–the Gulf States 130-MW complex supplying steam to oil refineries and related industries near Baton Rouge, La.—has decreased *by* **30 to** 50 percent over the past several years, according to a spokesman for the utility.

The weakened financial position of some industries is also likely to be a factor in cogeneration. Whereas the steel industry is a very heavy energy user, it has been a declining industry over the past decade and one unlikely to have the capital for new cogeneration facilities. In most industries, cogeneration faces competition for capital with expansion of production capacity, and in such a face-off cogeneration investments are likely to have a low priority. However, this situation would be averted under utility ownership, or under the leasing provisions of the Economic Recovery Tax Act of 1981. Although utilities face more financial problems than at any time in decades, smaller investments in cogeneration systems can be financed more easily than 1,000-MW central powerplants.

If cogeneration is implemented, the amount **of** electrical capacity resulting from a system sized to fit a given heat or steam load could vary by as much as a factor of 4 depending on the type of cogeneration equipment that is used. For example, a large industrial installation that uses 0.5 million lb/hr of steam would cogenerate 30 to 40 MW of electricity with steam turbines, and 120 to 150 MW with gas or oil burning combustion turbines. A major question for industrial usage, therefore, is the extent to which alternate fuels such as coal or biomass can be adapted to turbine technology, because the traditional fuels (oil and gas) are now the most expensive available on the U.S. market.

COMMERCIAL COGENERATION

Although the opportunities for cogeneration in industry are numerous and diverse, cogeneration in commercial buildings is likely to have a smaller market potential. Commercial enterprises typically use thermal energy only for space conditioning and water heating, and have thermal load factors that are usually much lower than those of industrial concerns. As a result, the economics of cogeneration systems for commercial buildings traditionally have been much less favorable than those of industrial systems. Recently, however, market incentives resulting from PURPA and/or from high electricity and fuel prices have changed the economics of commercial cogeneration. Several technical and economic factors in particular determine the relative attractiveness of commercial building cogeneration and purchasing utility-generated electricity, such as the suitability of electrical and thermal load profiles, the potential for fuel savings, and the change in relative fuel prices.

This section discusses the results of OTA analyses of cogeneration in commercial buildings v. centralized electric utility systems. The section begins with a review of the literature on commercial cogeneration, followed by a general introduction to OTA's analytical methods, a discussion of the major assumptions used in the analyses, and a summary of the results.

Previous Studies of Commercial Cogeneration

Several existing studies have examined the potential for commercial cogeneration in particular areas or under certain conditions. These include a FERC study that estimated the amount of cogeneration that would be stimulated by PURPA (28); a study by the American Gas Association (AGA) that compared gas-fired cogeneration with two conventional heating systems in a hospital in different climate regions (l); and regional studies by Consolidated Edison (Con Ed) for their service area (1 3,25) and by the State of California for State-owned buildings (s).

The FERC study calculates the national and regional penetration of cogeneration and small power production induced by PURPA through 1995, and concludes that only in the Mid-Atlantic region (New York, New Jersey, and Pennsylvania) is commercial building cogeneration likely to be economically attractive. FERC projects that 2,500 MW of commercial sector capacity could or might be installed in this region by 1995, producing 10,000 GWh/yr of electricity. In these calculations FERC assumed: first, that the PURPA regulations would be the sole incentive for cogeneration; second, that cogeneration would only occur in large new buildings (e.g., new apartment buildings with more than sO units, new hospitals having more than So beds); third, that all commercial investment would earn a fixed rate of return of 20 percent; and fourth, that all equipment would have a fixed capacity factor of 45 percent and a fixed size of 500 kw. Some of these assumptions may be both too kind and too cruel to commercial cogeneration. That is, FERC'S analysis ignores incentives other than PURPA (e.g., tax benefits, high electricity rates), the possibility of retrofits or eventual use in smaller buildings, and the achievement of higher capacity factors, and thus may understate cogeneration's potential. At the same time, the analysis uses a very favorable rate of return and thus may overstate the market potential for cogeneration under current high interest rates.

The AGA study is based on a prototype design for a 300,000 square foot hospital located in four different climate regions. AGA assumed two different rates for utility purchases of cogenerated power to compare the annualized capital, fuel, O&M, and net electricity costs for three different types of heating and cooling systems for the hospital: 1) a conventional combination system, using a gas boiler to provide steam for space heating plus an electric air-conditioner for space cooling, and relying on the grid for electricity; 2) an all-electric system, using baseboard resistance heaters and air-conditioners run with utility-generated electricity; and 3) an all-gas system, using a gas-fired cogenerator to provide electricity and space heating and a waste heat recovery system to run an absorptive air-conditioner. AGA assumed the cogenerator was sized to match the

thermal load, with any excess electricity being sold to the electric utility.

The AGA study concluded that the "economic attractiveness (of cogeneration) is heavily dependent on the buyback rate for cogenerated electricity." The study found that, for all four climate regions, the cogeneration system had a lower annual cost than the other options when the buyback rates were set at 8cents/kWh. However, when the rate was lowered to 2cents/kWh, cogeneration was found to be economical only in the Mid-Atlantic region. This is because the higher buyback rates offset cogeneration's high capital cost compared to the capital costs of the combination and all-electric systems. But when the buyback rates were lowered, cogeneration's capital cost became prohibitive in all but the Mid-Atlantic region, where high fuel costs and electric utilities' dependence on foreign oil give fuel-efficient cogenerators an economic advantage.

Although the AGA study analyzes the sensitivity of cogeneration economics to factors such as buyback rate and climate, it is limited to hospitals, a type of commercial building with a relatively constant energy demand.

ConEd developed a model of the costs and benefits of investment in cogeneration based on the internal rate of return from such investment, and applied the model to load data for their 4,500 largest customers, assuming that the investment would be made if the rate of return would be at least 15 percent over 10 years. Depending on customers' loads and other variables, ConEd found an "expected" cogeneration penetration of 395 customers with a combined peakload of 1,086 MW, with a high range of up to 750 cogenerators totaling 1,483 MW peakload. The analysis was then repeated using a slightly higher cost cogenerator (and thus a lower rate of return), and the market potential dropped substantially—to 27 customers with a combined peakload of 130 MW.

These market penetration estimates for cogeneration depend heavily on how the cogenerators will operate. Con Ed assumed that cogenerators would only operate when there is sufficient electrical demand on the system. Thus, the assumed thermal efficiency is low (52 percent for commercial building systems and 62 percent for residential systems), and the cogenerators are unable to provide either substantial fuel or cost savings. However, if cogenerators are undersized (relative to the electrical demand) so that they operate as "baseload" heaters and only supply some of the electrical needs, they may have lower total costs, and thus, higher penetration rates than the ones calculated by ConEd (3). Therefore, even in the Mid-Atlantic region, cogeneration's market penetration may be very sensitive to operating and cost assumptions.

In the fourth study of cogeneration in commercial buildings three State agencies in California calculated the cogeneration potential in State-owned buildings, including hospitals, universities, and State offices. The State identified 188 State-owned facilities that have significant potential for cogeneration, and initiated engineering studies for the cost effectiveness of cogeneration. "The evaluation showed that 150 MW at 24 sites could be designed, under construction, or in operation in fiscal year 1981. An additional 97 MW at 31 sites could be developed in fiscal year 1982, totaling 247 MW at 55 sites. It should be clearly understood that these are preliminary estimates of cost-effective cogeneration capacity. Further engineering analyses may result in increased or decreased capacity." The study concludes that the total potential for cogeneration in State-owned buildings is over 400 MW. The distribution of this capacity among State facilities is shown in figure 51.

Because the literature on commercial cogeneration is sparse, OTA undertook its own analysis of cogeneration opportunities in the commercial sector. This analysis is concerned with illustrating those parameters that significantly affect the use of cogeneration in commercial buildings. To do this, in part, we make use of a computer-based model—the Dispersed Electricity Technology Assessment (DELTA) model–that simulates decisionmaking by electric utilities in choosing new capacity. The model can accommodate ranges of values for the technical, operating, and financial characteristics of utilities and cogenerators. There are limitations to its use, however, due to the number of assumptions that have to be made and to the gaps in the available data. Consequent-

Figure 51.—Cogeneration Potential at California State Facilities

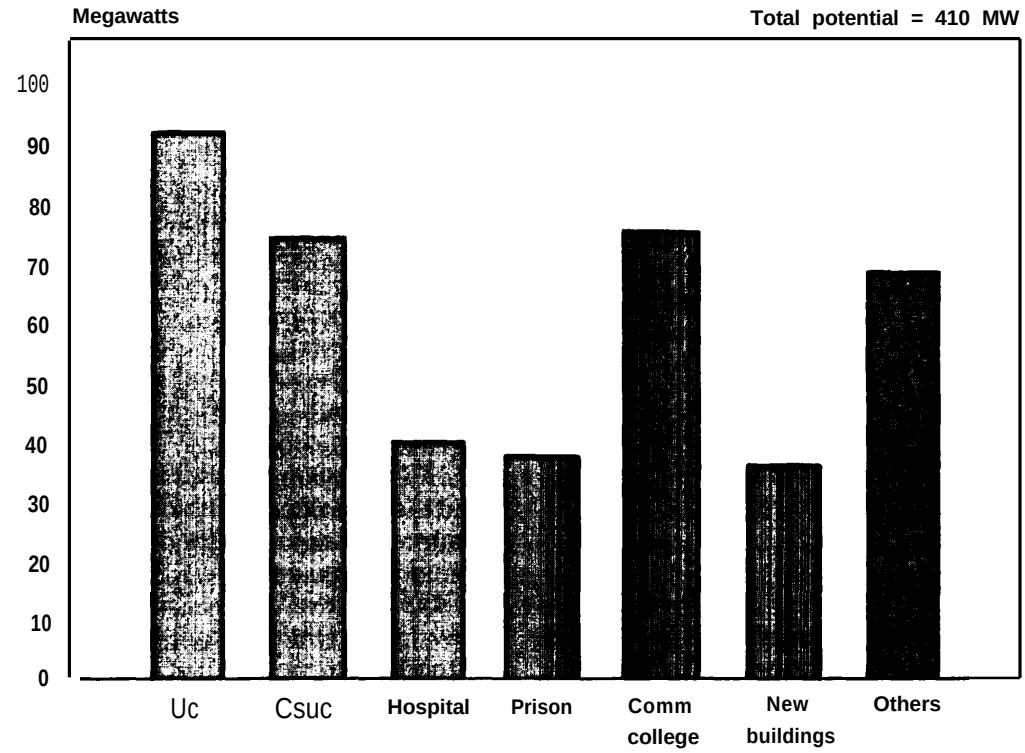

SOURCE: California Energy Commission, *Commercial Status: Electrical Generation and Nongeneration Technologies* (Sacramento, Calif.: California Energy Commission, P102-8O4O4, April 1980).

ly, the DELTA model cannot be used to accurately project levels of cogeneration use in commercial buildings over the next several years. in particular, we have not used the model to analyze the case where natural gas and distillate oil prices are significantly different from one another, nor the case where retrofits of existing buildings are included in the demand for thermal energy. A qualitative discussion of these cases is presented, however. The model does give us, though, insight into how cogeneration might compete with new central station capacity to supply commercial electricity demand, and the effect of such factors as thermal load profiles on that competition. Therefore, despite its limitations it is believed that the DELTA model–properly clarified–will substantially assist in understanding the conditions that affect cogeneration's future in the commercial sector.

Critical Assumptions and Limits of the DELTA Model

The DELTA model uses a linear program (similar to those used by utility planners) that minimizes the total cost of producing electricity and thermal power during the years 1981 to 2000 (see app. A for model description). The model simulates the addition of grid-connected cogeneration in three kinds of large new commercial buildings, with different types of daily load cycles, to supply electricity, space heating, and space cooling demands. Several scenarios were constructed to explore the sensitivity of cogeneration in these buildings to regional utility and climate characteristics, future fuel price changes, and different technological specifications. The structure of the model, the assumptions about thermal and electricity supply and demand, and

the features of the scenarios constructed are described below.

Model Structure

Electric and Thermal Cost Minimization.—The DELTA model differs from many existing utility planning models in that its objective is the minimization of total annualized fixed plus operating costs for **both utilities and their commercial building customers (e.g.,** for heating and cooling). Thus, DELTA goes beyond traditional utility planning, which usually analyzes only those costs borne by the power system. The strategy selected through this hybrid cost minimization may not exactly match either the strategy chosen by the utility or by the customer acting alone, but will tend to produce an "average" between both parties.

Demand Assumptions

Grid-Connected Cogeneration.–The DELTA model only examines grid-connected cogeneration because the PURPA provisions on purchases of cogenerated power are intended to benefit cogeneration systems that provide energy and/or capacity as well as diversity to utilities. Therefore, OTA did not analyze the effects of stand-alone systems on utility operations.

Three Types **of Energy Demands.–The DELTA model specifies hourly demands for three types of energy: space heating, space cooling, and electricity. The analysis begins in 1980 with a specified thermal baseline** of zero load and zero capacity, and an electrical baseline of 1,000-MW load and the existing generating capacity mix (normalized to the 1,000-MW load) in each sample region. The model then determines what capacity additions will minimize utility and customer costs for all three types of energy, assuming a range of growth rates for energy and peak demands in each sample region (see table 40, below, for a description of existing electrical capacity and growth rates). New capacity is added at the end of each decade—in 1989 and 1999—and then system costs are evaluated in 1990 and 2000.

The 1980 electric generating capacity in each sample region was normalized to 1,000 MW to facilitate comparisons of capacity additions and future utility operations among the different regions. However, in order to compare thermal demands among the building types and regions a different approach was necessary. A large amount of data would be needed for a precise specification of existing thermal capacity and demands–unlike electrical demands, there is no accurate and centralized source of information on thermal demand and capacity. Thus, in order to ensure consistent and accurate treatment of thermal demands, OTA would have had to collect individual commercial customer profiles–a time-consuming and expensive process. Therefore, OTA chose another method for the DELTA model: to set existing thermal demands and capacity equal to zero. In effect, this is equivalent to only allowing cogeneration in new buildings, and then comparing the cost of installing cogeneration with the costs for new centralized capacity and new steam boilers, but not considering the replacement of any existing steam boilers with new cogeneration equipment. As was stated, without inclusion of such boiler retrofits, the model cannot be used to project the cogeneration potential in the entire commercial sector. Although we have not attempted to project the retrofit potential in any other way, the factors that will influence this potential will be discussed later in this section.

Eight Typical Days.–OTA chose to specify each type of energy demand with a yearly pattern of eight different "typical days" in order to observe more clearly the range and frequency of utility operating characteristics (see table 37).

Table 37.—Typical Days Used in the DELTA Model

Day type	Frequency Per Year
Winter:	
Peak[a]	6
Weekday	59
Weekend	26
Summer:	
Peak[a]	8
Weekday	80
Weekend	34
Fall/spring:	
Weekday[a]	108
Weekend	44
Total	365

aThe 1990 electrlc bad patterns for region 1 for these 3 days are shown in fig. 52.

SOURCE: Off Ice of Technology Assessment.

Each typical day has a specific load cycle pattern for each region and year. For example, the load cycle patterns during 1990 for three different typical days and for one region (New England) are shown in figure 52. The differences among these cycles are caused by the different assumptions for energy use and demand growth used in each region.

Three Commercial subsectors.-In addition to specifying the annual load patterns for electricity, OTA chose to disaggregate the commercial sector's thermal heating and cooling demands into three parts: hospitals and hotels, multifamily buildings, and 9-to-5 office buildings. This was done to explore the effects of load diversity on cogeneration operation, and thus to provide more precise information on the opportunities for commercial cogeneration. Other commercial sector building types (such as universities and retail stores) have energy demand profiles that are combinations of these basic three categories. (The electric demands were not disaggregated in the DELTA model because the load profiles for the entire commercial sector were sufficient to capture the interaction of the cogenerators with the centralized utility system.)

The three subsectors were chosen **for their different thermal load patterns; examples of these patterns for two typical day types are given in figures 53 and 54 for 1990 New England heating and cooling demands respectively.** For heating demands, hospitals and hotels have the lowest energy demands of all the subsectors, with small peaks at 8 a.m. and 9 p.m. Multifamily buildings use somewhat more energy and have similarly occurring peaks, while 9-to-5 offices use the most energy and have the most pronounced peak during the winter days at 6 a.m. The cooling demands of hospitals and hotels and multifamily buildings are small when compared to office buildings, the latter having a peak during summer days at 2 p.m.

Supply Assumptions

The energy supply assumptions in the DELTA model specify different sets of fuel prices and of

Figure 52.—Comparison of Eiectric Demand for Three Types of Days
(for region 1 during 1990)

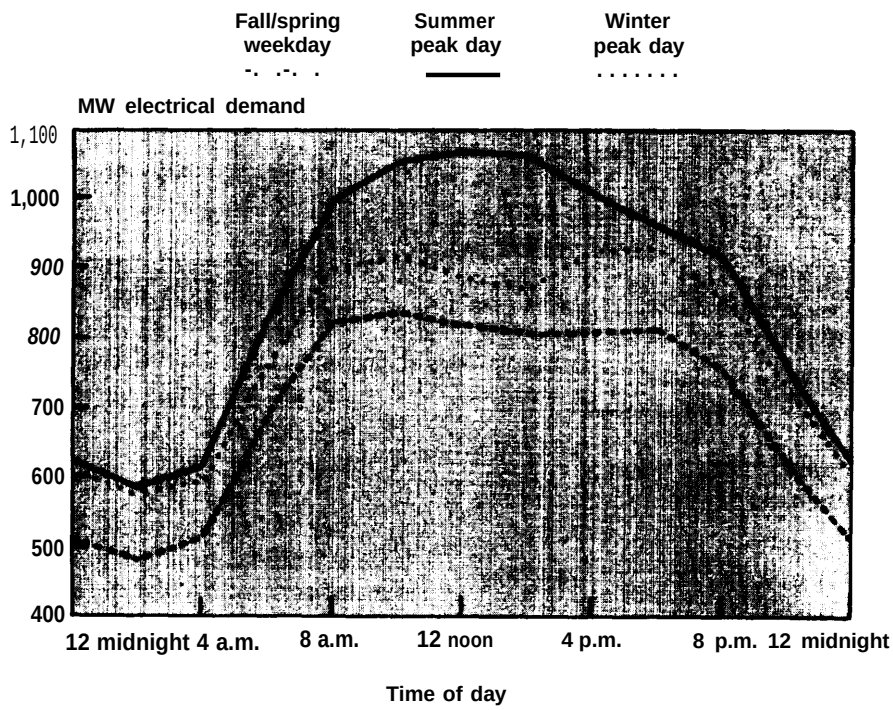

SOURCE: Office of Technology Assessment.

Figure 53.—1990 Heating Demands for Scenario 1[a] (for Region 1 during 1990)

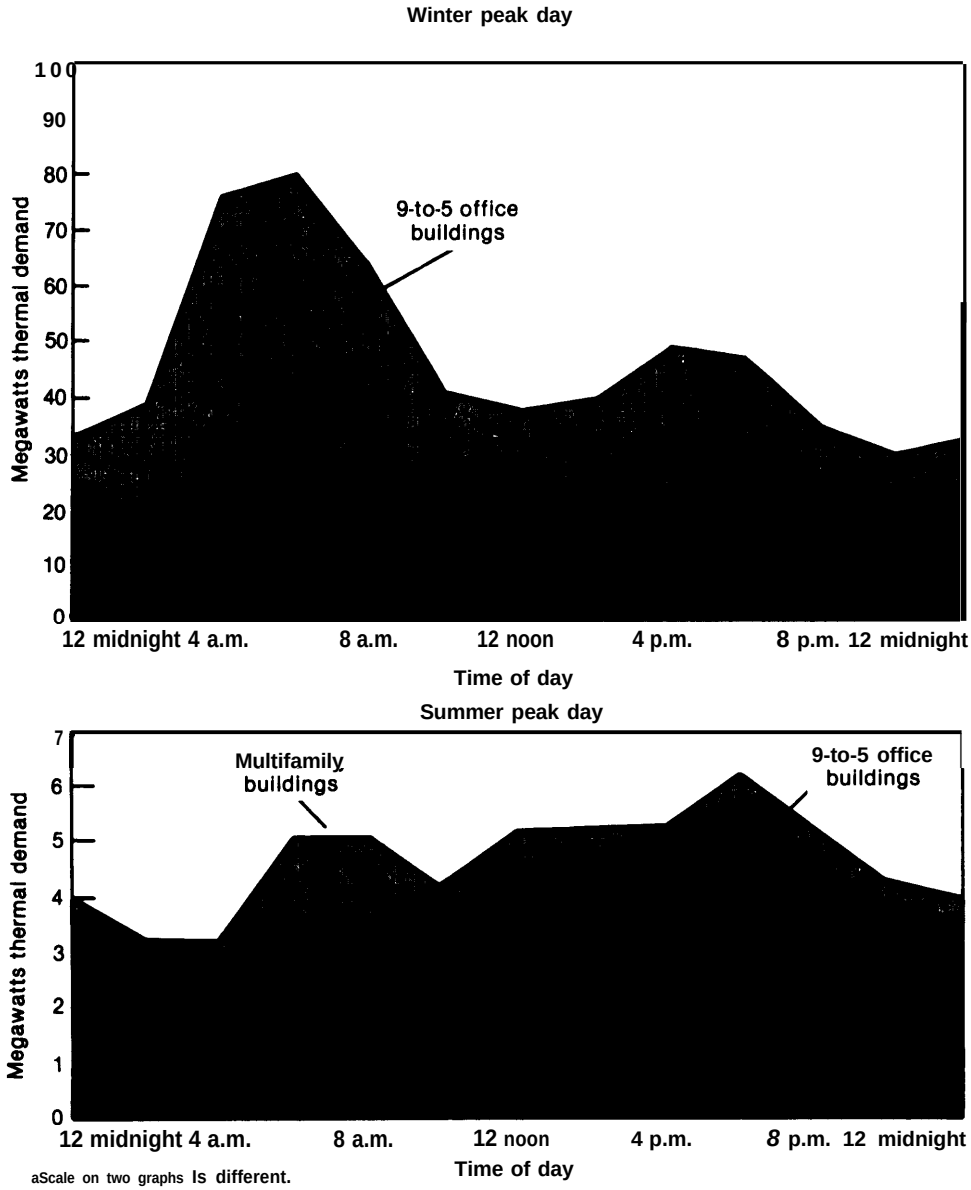

aScale on two graphs is different.

SOURCE: Off Ice of Technology Assessment.

technological and operational characteristics in order to describe the three different sample utility regions.

Fuel Prices.–OTA specified two different fuel price trajectories, based on the 1980 average prices in the commercial sector (31) and the range of real growth rates (not accounting for inflation) assumed in two previous OTA studies (1 7,20). These growth rates are: 1.0 percent annually for coal (and electricity) and 1.7 percent per year for fuel oil and natural gas for the low price trajectory, and 4.7 percent annually for coal (and electricity) and 4.8 percent per year for fuel oil and natural gas for the high price trajectory. * For this analysis of commercial cogeneration, these as-

*These growth rates are explained in the OTA report, *Application of Solar Technology to Today's Energy Needs,* vol. 11, September 1978.

Figure 54.-1990 Cooling Demands[a] (for Region 1 during 1990)

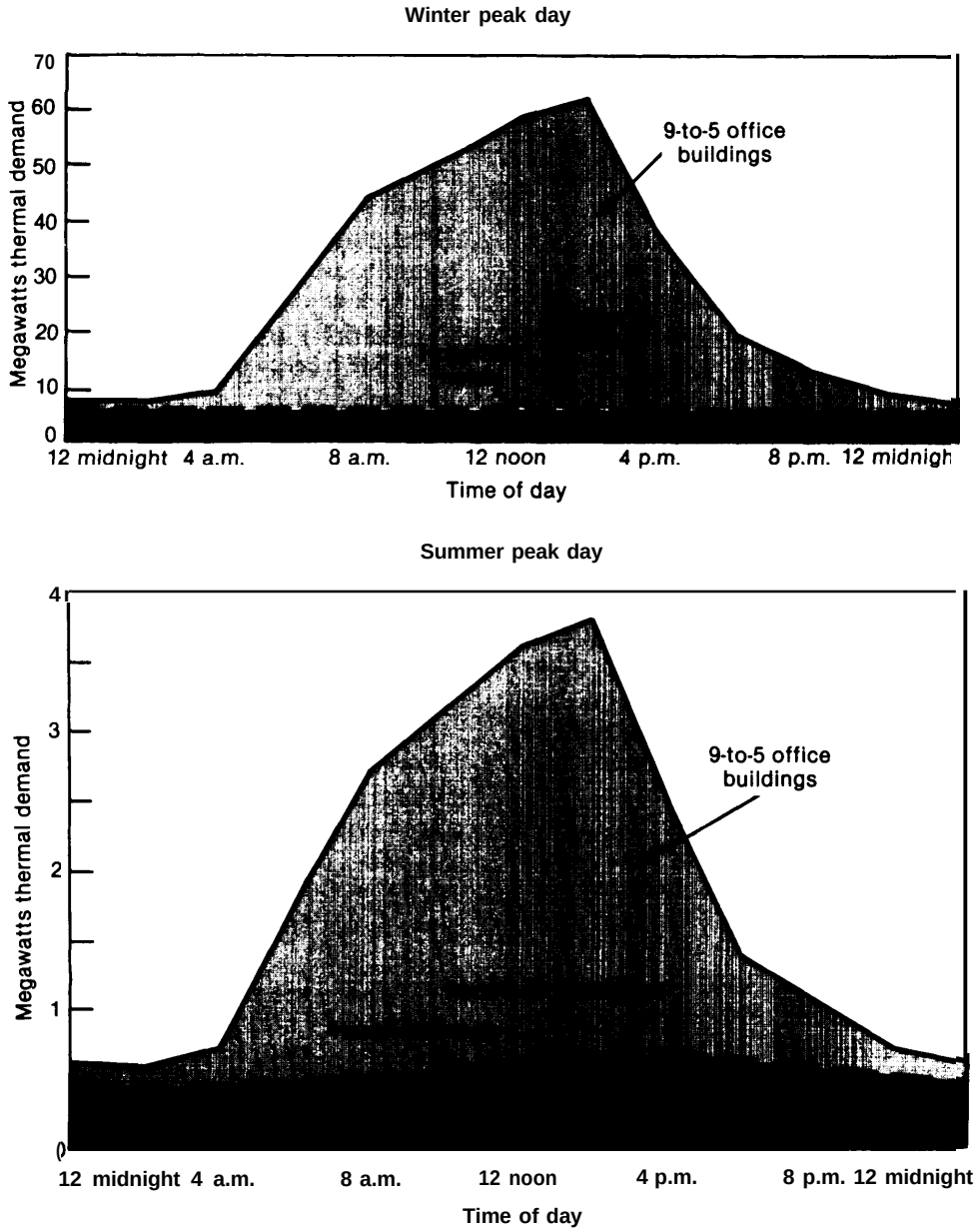

a Scale on two graphs is different.

SOURCE: Office of Technology Assessment.

sumptions were modified slightly by setting the price of natural gas equal to fuel oil after 1985.

Using two different fuel price trajectories allowed us to test the sensitivity of our results. However, the results varied by less than 2 percent between the two different price paths. Therefore, only the lower price path results were reported. These prices are shown in table 38.

our assumption about natural gas prices requires elaboration. Currently, most natural gas is used for purposes that require a higher quality fuel than coal or residual fuel oil. About 25 to

Table 38.-Fuel Prices
(all prices In 1980 dollars per MMBtu)

	1980	1990	2000
Coal	1.34	1.95	*2.38*
Residual	4.05	5.86	7.13
Distillate	5.67	8.20	9.98
Natural gas	2.09	8.20	9.98

SOURCE: Office of Technology Assessment.

30 percent of current natural gas use is for raising steam, while the remainder goes for space heating in buildings, industrial process heat, peakload electricity generation (primarily combustion turbines), and chemical feedstocks (7). The future price of natural gas will be determined by the relative strengths of these demands combined with the availability and cost of new domestic natural gas.

The conversion of all natural gas-fired boilers to coal would free about 4 trillion to 5 trillion cubic feet (TCF) of natural gas per year at current consumption rates. If there were no other change in natural gas supply and demand, this new "supply" would be more than enough to replace all current distillate fuel oil used for stationary purposes (1.9 MMB/D) (8). If price increases resulting from decontrol bring about more conservation, additional natural gas would be freed, which, when combined with the displaced boiler fuel, would result in a substantial surplus of natural gas. The most logical use for this surplus gas would be to displace residual fuel oil used to fire boilers. (Of course, in reality, the gas would only leave the boiler market until it just displaced all stationary fuel oil). This competition with residual fuel oil would keep the marginal cost of natural gas about the same as that of residual oil.

This scenario, however, assumes that domestic natural gas supplies do not decline significantly over the same period, and that the marginal cost of the new supplies that offset the decline in production from existing reserves will be below the price of distillate fuel oil. It is quite possible–indeed both Exxon and the Energy Information Administration have projected as much–that there will be a net decline in domestic natural gas supplies by as much as 3 TCF by 1990 (10). On the other hand, AGA estimates that supplies could increase substantially over this same period (2). In all cases, however, a significant fraction of new domestic supplies in these projections is made up of high cost supplemental supplies—unconventional gas, Alaskan gas, and synthetic gas from coal. In fact, the three organizations project about the same amount of conventional domestic natural gas production—about 14 TCF in 1990 and 12 TCF in 2000. This is close to the quantity now being consumed by the so-called high priority uses for which only distillate fuel oil or electricity are feasible substitutes (19). Therefore, if the cost of new marginal natural gas supplies were equivalent to distillate fuel oil, the price of all natural gas would approach that of distillate or electricity (whichever is cheaper) as decontrol takes effect and the quantity of old, flowing natural gas under contract vanishes. It is partly the somewhat optimistic supply assumptions about new, "lower cost" gas that has caused most recent price projections to show natural gas prices below those for distillate fuel oil for the remainder of the century (8).

Our price scenarios rest on the assumption that "lower cost" gas supplies will decline as fast or faster than the rate at which coal displaces natural gas in boilers. Even in this case, however, natural gas prices could be lower than distillate oil if electricity prices stay below distillate (on an energy-service basis)—as they currently are in many regions of the country. in this case, natural gas prices will likely approach those of electricity (again on an energy service basis). Similar speculation has been offered by others (26). Because OTA did not run the model with natural gas prices below distillate, the model results presented are confined to what would happen under the plausible situation that the prices of the two fuels are the same. To partially expand the analysis, some calculations of target gas prices are presented for the condition that cogeneration produces power at the cost of electricity determined by the model. There is evidence, as will be seen, that some cogenerators are proceeding based on the assumption that natural gas prices will remain below distillate prices for the economic life of their projects.

Technology Characteristics.–The major technologies used in the DELTA model include

three types of central electricity generating plants, several space heating and cooling technologies, and the cogenerators. Table 39 summarizes the characteristics for each type.

OTA specified three different types of generic utility generating plants to serve base, intermediate, and peak loads. The baseload type is represented by coal-fired steam powerplants, the intermediate-load type by either residual oil-fired or distillate or gas-fired steam turbines, and the peaking technologies by distillate or gas-fired combustion turbines.

Space **heating and** cooling technologies in the model include ordinary steam boilers used for heating, electric air-conditioners, absorptive air-conditioners using distillate or gas fuel, and thermal storage equipment with a capacity of up to 24 hours storage. Because of the linear programming formulation, the model cannot change the type of fuel used in either electric generating or thermal equipment from their original specification in table 39.

Two sets of capital costs for cogeneration capacity were included in the analysis. The higher cost cogenerator has a capital cost of $750/kW, while the lower cost system has a capital cost of $575/kW (both in 1980 dollars). These capital costs are typical of the range of cogeneration costs described in chapter 4 (see table 23). We did not include, explicitly, cogeneration technologies that could use coal by means of synthetic fuel production or advanced combustion technologies (e.g., fluidized beds). If the capital costs of these technologies are similar to those used in the model, the results would remain unchanged. The only exception would be a reported increase in coal use if these technologies are employed, because the model allowed cogeneration technologies to use only oil or natural gas.

Operational Assumptions.–OTA made three operational assumptions that would allow the DELTA model to follow more closely the way actual grid-connected cogeneration systems would operate. First, OTA specified the utility planned reserve margin to be 20 percent of annual peak demand. This includes scheduled maintenance for 10 percent of the year for the base and intermediate types of plants, and is typical of reserve margins used in power systems planning, although actual reserve margins may be much higher than 20 percent. For the sample utility regions used in this analysis (see below), all 1980 reserve margins were above 20 percent. In addition, the actual 1981 national average reserve capacity was around 33 percent (16).

Second, the model assumes that all cogeneration equipment has an E/S ratio of 227 kWh/

Table 39.—Technology Characteristics (all costs are for 1980 In 1980 dollars)

Technology type	Cap cost ($/kW)	Fixed O&M ($/kW-yr)	Variable O&M ($/kWh)	Availability[a] (percent)	Heat rate[b] (Btu/kWh)
Base	1,014	14.0	0,001	68	10,300
Intermediate	200		0,0015	88	10,500
Peak	200	0.3	0.003	93	14,000
Cogeneration—high	750	0.0	*0.008*	*95*	*9,751*
Cogeneration—low	575	0.0	0.008	95	9,751
Thermal boiler	100	0.0	0.0	95	4,266
Thermal storage.	2'	0.0	0.0	—	—
Electric air-conditioners	700	0.0	0.0	95	1,138
Absorption air-conditioners	110	0.0	0.0	95	5,251

aAvailability is the maximum percent of time that capacity can serve demand—thus 88 percent means the baseload equipment is out of service a total of 12 Percent of the year.
bThe cogeneration heat rate shown is the heat rata for electrical service only: the net heat rate (Including the energy In Steam produced by the cogenerator) is 5,333 Btu/kWh. Both of the heat rates shown for air-conditioners are calculated in Btu/kWh of heat removed from commercial buildings.
cCapital cost of thermal storage is expressed in dollars/kWh.

SOURCES: Electric Power Research Institute, The Technical Assessment *Guide,* Special Report PS 1201 SR, July 1979, specifies capital cost, variable and fixed O&M costs, heat rates, and availabilities for coal steam plants with flue-gas desulfurization, for distillate oil-fired steam plants, and for oil- and gas-fired combustion turbine plants. OTA multiplied the costs for these plants by the Consumer Price index inflator to bring 1978 costs to 1980 costs, and used the Gross National Product inflator to bring 1978 dollars to 1980 dollars. Characteristics for the thermal technologies were obtained by averaging the data collected in ch. 4 for cogeneration equipment, thermal boilers, and storage (see table 23 for these figures). Zero fixed and variable O&M costs are assumed for the conventional space heating and cooling technologies, because these costs are very small when compared to the 8 mills/kWh variable O&M costs of the cogenerators.

MMBtu, with 35 percent of the output used for electricity, 45 percent to satisfy the thermal load, * and 20 percent exhausted to the outside environment—an overall efficiency of 80 percent. Third, thermal storage is assumed to have an efficiency of 90 percent (i.e., 1.0 MWh (thermal) into storage can supply 0.9 MWh (thermal) out of storage). No electrical storage is considered. These values are within the range of actual values described in chapter 4 for E/S ratios and efficiencies for gas turbine or combined-cycle cogeneration systems, which are or will be applicable in the commercial sector (see table 23).

Sample Regions.–OTA chose three sample utility regions based on the technological and operational assumptions mentioned above and on data from the regional electric reliability councils. **Region 1** is typical of areas with utilities that have a large percentage of oil-fired steam generation, high reserve margins (over 40 percent), and a relatively moderate annual growth in electricity demand of 1 percent (such as the Northeast Power Coordinating Council). The summer and winter peaks for Region 1 are about equal. **Region 2** is typical of summer-peaking regions with mostly nuclear or coal baseload capacity, a higher annual load growth than in Region 1 (2 percent), but lower reserve margins (26 percent) (e.g., the Mid-America Interpool Network). **Region 3 is typical of areas with** large reserve margins (over 40 percent), relatively high load growth (3 percent), and large amounts of gas-fired steam generation (such as the Electric Reliability Council of Texas). Region 3 is also summer-peaking. (See fig. 8 for the location of each of these regions of the North American Electric Reliability Council.)

● **Measured in megawatts, i.e., 1 MW (thermal) = 3.412 MMBtu/hr.**

Table 40 summarizes the electrical demand and supply characteristics of each region, normalized to 1,000 MW.

Scenario Description

Based on the above demand and supply assumptions, OTA used nine "standard scenarios" to investigate the effects of cogeneration on the sample utility regions for different cogeneration costs (see table **41). These standard scenarios were grouped into three sets to represent the three utility regions. Each set has three different scenarios: a base case** in which no cogeneration is allowed and only utility powerplants are used, and two cogeneration cases using higher and lower capital costs of the cogenerators. As mentioned previously, the scenarios also originally included two sets of fuel prices. However, the results of the analysis varied by less than 2 percent between the higher and lower prices, and only the results for the lower prices are reported here.

In addition, five **special scenarios were formulated to investigate the effects of limiting the addition of baseload capacity and of using a zero capital cost cogenerator. Not all possible combinations of regions and cogeneration capital costs were made** for these five special scenarios because OTA was primarily interested in observing the sensitivity of the standard set of scenario assumptions to particular situations, rather than **making complete inter-regional comparisons. Table 41 identifies these special scenarios and their distinguishing assumptions.**

Commercial Cogeneration Opportunities

The DELTA model described above chooses among the varying technological, financial, and other assumptions to find the minimum total cost

Table 40.-Sample Utility Configurations

Region	1960 capacity installed (MW) Base	Intermediate	Peak	Total	Electrical demand growth[a]	Annual peak in	1960 reserve margin
		740	150	1,390	1%	Summer, winter	39%
2	500 1,020	0	*237*	*1,257*	2%	Summer	26°A
3	265	1,107	50	1,442	3%0	Summer	44%

aAnnual growth in both electrical peak demand and total energy demand.

SOURCE: Office of Technology Assessment.

Table 41.—Description of Scenarios Used

Standard scenarios:	
I-NO COGEN	Region 1, base case/no cogeneratlon allowed
1-HIGH COST COGEN	Region 1, high capital cost cogeneration
I-LOW COST COG EN	Region 1, low capital cost cogeneration
2-NO COGEN	Region 2, base case/no cogeneration allowed
2-HIGH COST COGEN	Region 2, high capital cost cogeneration
2-LOW COST COG EN	Region 2, low capital cost cogeneration
3-NO COGEN	Region *3,* base case/no cogeneration allowed
3-HIGH COST COGEN	Region 3, high capital cost cogeneration
3-LOW COST COG EN	Region 3, low capital cost cogeneration
Special scenarios	
I-NO COGEN/COAL-LIMITED	Region 1, coal-fired baseload capacity limit, no cogeneration
I-LOW COST COGEN/COAL-LIMITED	Region 1, coal-fired baseload capacity limit, low capital cost cogeneration
2-ZERO COST COGEN	Region 2, zero capital cost cogeneration
3-NO COGENI/OAL-LIMITED	Region 3, coal-fired baseload capacity limit, no cogeneration
3-LOW COST COGEN/COAL-LIMITED	Region 3, coal-fired baseload capacity limit, low capital cost cogeneration

SOURCE: Office of Technology Assessment.

of providing electric and thermal energy in each scenario. The model results are not predictions about future utility behavior—rather, they represent what might happen under the conditions and assumptions used to specify the scenario. By answering these "what-if" types of questions, the model can provide valuable insights about the interaction of cogeneration with the existing centralized utility systems.

Capacity Additions and Operating Characteristics

In order to analyze the addition of cogeneration capacity and its effects on utility system operations, OTA determined, first, whether a minimum-cost capacity expansion plan would include significant amounts of cogeneration, and second, how the cogeneration equipment that is added is used to supply electric and thermal energy.

COGENERATION CAPACITY

To see if cogeneration capacity would be economically attractive compared to central station generation for our set of assumptions, OTA compared the electric generating capacity additions for the base-case scenarios–in which no cogeneration is allowed—with the scenarios in which cogeneration can be added. Figure 55 summarizes these capacity addition comparisons for the nine standard scenarios.

The results show that the greatest opportunity for cogeneration occurs when the match between thermal space heating and electrical demands is the closest. Thus, the largest proportion of cogeneration capacity is added in Region 2, which has the highest thermal demand of the three regions. Region 3, on the other hand, adds more total capacity (cogeneration and central station) because it has the largest growth in electricity demand, and because it has a large proportion of existing gas-fired capacity that can be replaced by less expensive coal-fired units. With our assumptions, therefore, commercial cogeneration in new buildings is competitive with central station technologies only when there is a significant need for space heating and at least a moderate growth in electricity demand. Coal-fired capacity is cheaper than new cogeneration capacity when electricity is needed but very little or no heating is required. Coal is cheaper because of the difference in fuel prices, and that difference dominates any other cost of installing or operating the technology under our assumptions.

One way to test this result is to vary the capital cost of the cogenerator. By going to the extreme case of zero capital cost, the limit of cogeneration penetration can be shown under our fuel cost assumptions. * We ran this case for Region

*This analysis also provides a rough approximation of what might happen by keeping the capital cost unchanged but lowering natural gas fuel prices.

Figure 55.–Elactrical Capacity Additions 1990-200@

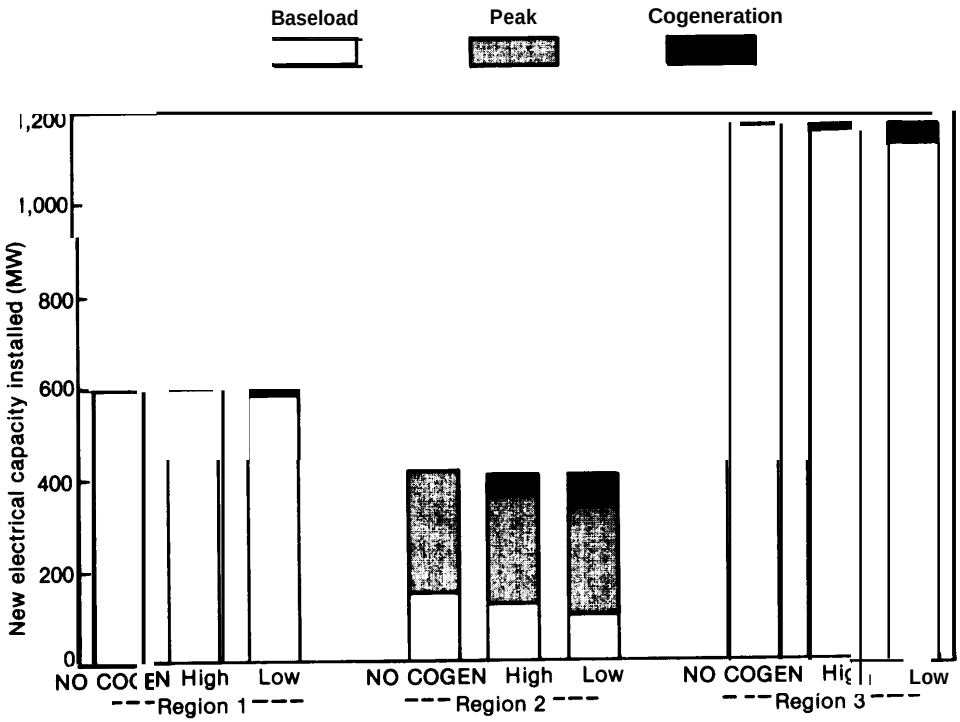

aFor 1990, scenario I–LOW-COST COGEN/COAL-LIMITED.

SOURCE: Office of Technology Assessment.

2 (abbreviated as 2-ZERO COST COGEN), and found that the cogeneration technology was more competitive with the coal baseload capacity and more cogeneration was installed than in the other cogeneration scenarios for Region 2. However, the amount of electricity produced from the cogeneration did not increase significantly (see the discussion on costs below).

In another set of special cases, the amount of coal that could be used for central station capacity was restricted. This constraint had two purposes. First, it simulated conditions where coal burning may be prohibited or severely restricted for environmental, availability, or other reasons. (This assumption also simulates the case where nuclear would serve as the baseload and it, too, would be restricted.) The second purpose was to examine the effect of much higher coal prices relative to natural gas and oil. This method (restricting coal use) is not as satisfactory as carrying out model runs with different fuel price trajectories and ratios, but will serve qualitatively to show how higher coal prices would benefit oil- or natural gas-fired cogeneration.

In Region 1, no baseload plants were allowed to be added through 2000, while in Region 3, baseload capacity additions through 1990 were limited to a small percentage of the total existing baseload capacity, while no limits were placed on additions from 1990 to 2000. Two scenarios were run for each region: a **new base-case** in which only central station equipment was added (abbreviated l-NO COGEN/COAL-LIMITED and 3-NO COGEN/COAL-LIMITED, for Regions 1 and 3 respectively) and a **cogeneration case** (abbreviated l-LOW COST COGEN/COAL-LIMITED and 3-LOW COST COGEN/COAL-LIMITED). Table 42 summarizes the capacity additions for these four scenarios.

Table 42 shows that the limits on baseload capacity additions increase the economic attractiveness of cogeneration in both regions. For ex-

Table 42.—New Capacity Installed for Coal-Limited Scenarios

Scenario	Total electrical capacity installed (MW)	Proportion of new electrical capacity installed (o/o)		
		Base	Peak	Cogeneration
I-NO COGEN/COAL-LIMITED	15	—	100	—
I-LOW COST COGEN/COAL-LIMITED	62	—	0	100
3-NO COGEN/COAL-LIMITED	1,192	100	0	
3-LOW COST COGEN/COAL-LIMITED	1,363	63	0	17

NOTE: "-" means assumed zero input for this scenario.

SOURCE: Office of Technology Assessment.

ample, 3-LOW COST COGEN/COAL-LIMITED installs 77 percent of its total capacity as cogeneration while the standard Region 3 scenarios (3-HIGH COST COGEN, and 3-LOW COST COGEN) install at most 4 percent.

These results demonstrate the competition between cogeneration and central station coal-fired capacity to meet new electricity demand. Both capital and operating costs of the system and the thermal demand determine this choice. If new coal-fired capacity is sufficiently inexpensive, even in the face of the efficiency advantage of cogeneration, coal will provide electricity and conventional oil- or gas-fired space heaters will provide thermal energy for these new buildings. Further, if excess electric generating capacity exists, the ability of cogeneration to penetrate the commercial market may also be limited, even if cogeneration is less costly than new, coal-fired central station generation. Electricity from the existing capacity, **because of its sunk capital cost, is usually cheaper than that produced by new, more efficient cogeneration** if the latter is confined to premium fuels. In some cases, however, economics may still favor cogeneration, particularly if the existing central station capacity is oil fired and near retirement. In some markets where retirement would be desirable in the next few years, cogeneration from natural gas-fired units could be the only means of replacement capacity, whether coal-fired generation is permitted or not. We will discuss this further below.

COGENERATION OPERATION

The above results on cogeneration capacity are explained by the details of how the electrical and thermal loads are met. OTA calculated the electrical capacity factor (the ratio of time a generator actually supplies power to the time the plant is available for service) for both the cogeneration and the baseload capacity in each of the scenarios. Table 43 shows the electrical capacity factors calculated by the model for both the standard and coal-limited scenarios. Most of the baseload capacity operates 66 to 70 percent of the time, while the cogenerators operate less than 30 percent of the time. * The low load factor for cogeneration results from its inability to generate electricity that is competitive with central station electricity even though cogeneration is more energy efficient. This is a result of our assumed fuel prices. As we shall see, the DELTA model only operates cogenerators when the electricity is needed to meet intermediate or peaking demands that otherwise would be supplied by oil-fired utility units. The higher fuel prices of these utility units, combined with the high overall efficiency of the cogenerator, allows the latter to compete economically in the market for intermediate and peaking power. When coal **is prohibited, the thermal and electrical capacity factor of the cogenerators increases from 30 percent or less to over 50 percent. In this case, the cogenerators are also supplying a small amount of baseload electricity. This is because the cogenerators can supply power less expensively than other types of central station generation when coal-fired additions are limited.**

However, these capacity factors only indicate the most general performance of each type of equipment. in order to provide a more complete description, we need to observe, **for each scenario, the hour-by-hour dispatching schedule** (for

*For the cogenerator, this is also the thermal capacity factor since the unit is producing both electricity and thermal energy while it operates.

98-946 O - 83 - 14 : QL 3

Table 43.-Capacity Factors for Baseload and Cogeneration Plants

	Baseload plants		Cogeneration plants	
	1990	2000	1990	2000
Standard scenarios				
I-NO COGEN	69	68	—	
1-HIGH COST COGEN	69	68	—	27
1-LOW COST COGEN	70	69	31	29
2-NO COGEN	66	67	—	—
2-HIGH COST COGEN		70		10
2-LOW COST COGEN	66	68	7	13
3-NO COGEN	69	68		
3-HIGH COST COGEN	70	68	21	20
3-LOW COST COGEN	70	69	21	21
Baseload-limlted-scenarlos				
I-NO COGEN/COAL LIMITED	80	80	—	
I-LOW COST COGEN/COAL-LIMITED	80	80	58	53
3-NO COGEN/COAL-LIMITED.	80	67		
3-L0W C0ST COGEN/COAL-LIMITED	80	69	95	7

Note:"—" means no cogeneratlon was Installed by the model, elther due to economics of the model or because of input es zero for the base-case scenarlos. Capacity factors are calculated for each plant type as follows:

$$\frac{\text{MWh Supplied}}{\text{(MW installed + existing MW) x 8,760 hours}} \times 100$$

SOURCE: Off Ice of Technology Assessment.

both cogenerators and central station generators) for each of the eight different types of "typical" days used in the analysis. Figures 56 and 57 present the space heating and electric demands, respectively, and show how each technology is dispatched to meet these demands for 1 day (winter peak which occurs six times a year) in 1990 for scenario 1-LOW COST COG EN/COAL-LIMITED.

Figure 56 shows that, during the 1990 peak winter day, the cogenerators provide about 37 MW of heat to meet thermal demands that vary between 30 and 78 MW. During this peak day, the cogenerators operate 95 percent of the time. Thus, seen from the perspective of a commercial building owner, cogenerators operate as a "baseload" heating system during winter peak days.

Figure 57 shows the electrical demands for the same 1990 winter peak day. Note that the cogenerators only contribute to the peak and intermediate load. The small numerical value of these contributions is partly due to our assumptions of zero thermal demand and 1,000 MW of electrical demand for 1980. If a larger thermal demand had been assumed and retrofits considered, the electricity contribution of the cogenerators would have increased substantially, although it would still be confined to the peak and intermediate load. What is important here, however, is not the absolute value of the electrical contribution by cogeneration, but rather what portion of the electrical demand it can supply economically compared with other options.

RETROFIT OPPORTUNITIES

As discussed above, existing buildings (hence existing thermal demands) were not included in this analysis. This rules out cogeneration retrofits and thus the analysis understates cogeneration's contribution to the total electric load. It is therefore important to discuss the factors that will influence the choice of whether to install a cogeneration system in an existing building. In addition to the considerations about economic competition with new central station electric generating capacity, the major constraints to retrofitting are excess central station capacity, the uncertainty about natural gas prices and availability, and the difficult financial conditions brought about by high interest rates and short loan terms.

The first constraint, excess capacity, has the effect of keeping the price of electricity well below its marginal cost in most regions of the country

Figure 56.—Thermal Supply and Demand for Winter Peak Day[a]

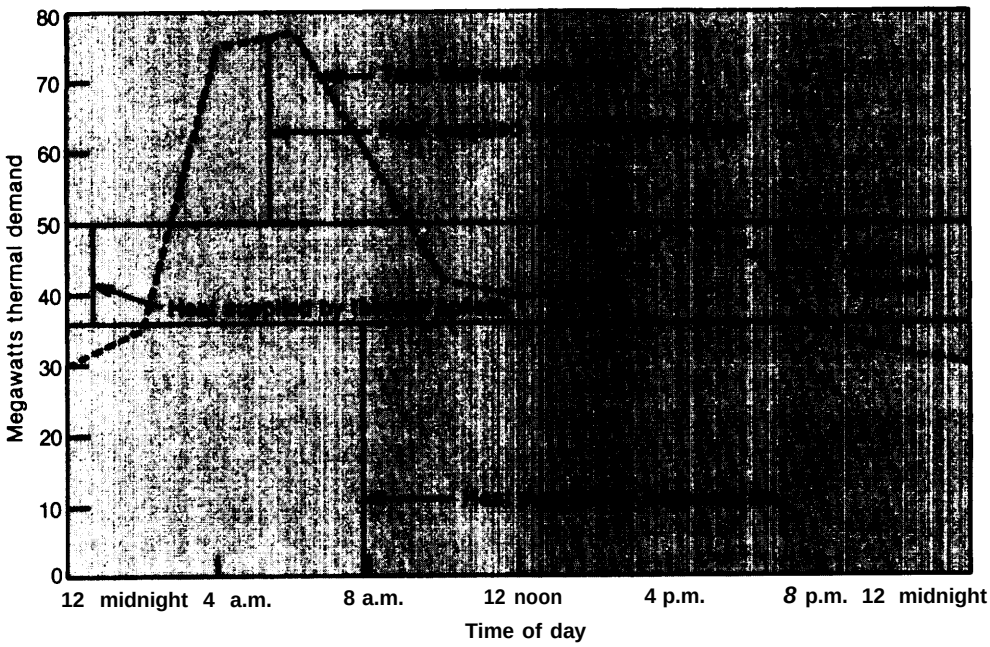

aFor 1990, scenario 1- LOW-COST COGEN/COAL-LIMITED.

SOURCE: Office of Technology Assessment.

Figure 57.–Electricity Supply for Winter Peak Day

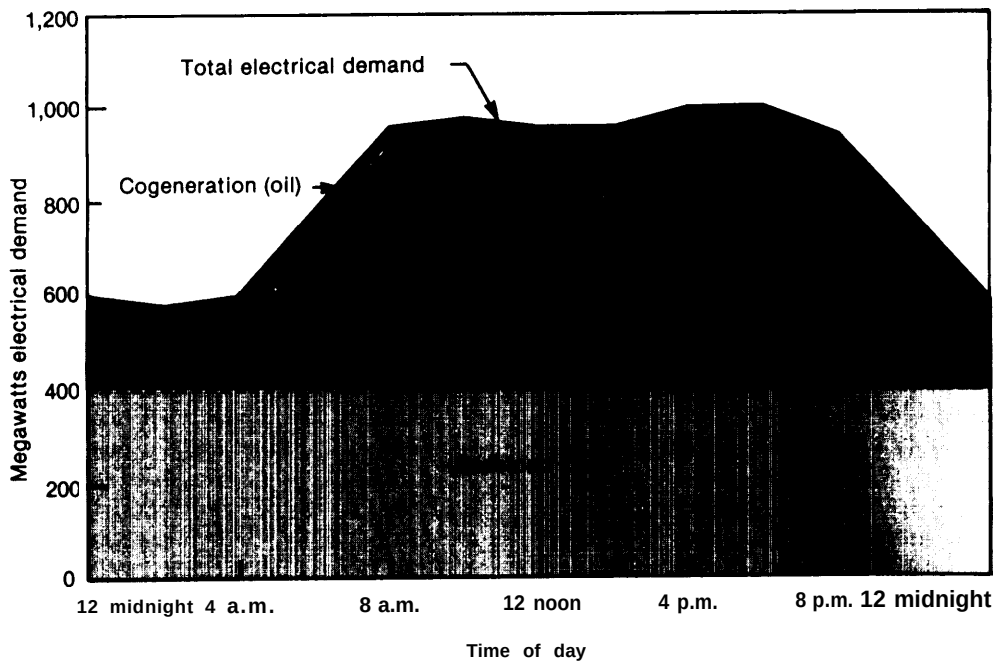

aFor 1990, scenario 1 - LOW-COST COGEN/COAL-LIMITED.

SOURCE: Off Ice of Technology Assessment.

and thus to force payments for cogenerated power under PURPA to be determined by fuel savings alone (i.e., no capacity credit). Both act as an incentive for building owners to continue purchasing all their electricity from the utility. New buildings have a similar incentive–as the model results have demonstrated. In the case of existing buildings the incentive is even greater, however, because of the sunk costs of existing heating equipment and interconnection with the utility. Where current prices exceed marginal cost, as would likely be the case if oil is the dominant fuel used to generate electricity and the future capacity would be coal-fired, shortrun PURPA payments based solely on fuel savings could be high, stimulating cogeneration investment. More will be discussed on this below.

The second constraint, uncertainty about fuel prices and availability, is important because natural gas is the most likely fuel for commercial cogeneration retrofits for the next several years. As discussed earlier, the price of natural gas will increase, but it could still be low enough to make cogenerated electricity and thermal energy (using a combustion turbine, diesel, or combined-cycle system) cost less than a combination of electricity produced from central station generators and an individual heating plant. Gas prices also could be much higher, perhaps as high as distillate fuel oil, which would make potential retrofits too costly in most cases. In the latter case, the results **would be similar to those obtained** for new construction as given by the model. The price at which natural gas-fired cogeneration is competitive with electricity depends primarily on the size of the facility, the credit obtained for displacing natural gas or oil used for space heating, the financial conditions available to the prospective owner, and the thermal load factor of the building. Capital and O&M costs per unit output increase as the facility size decreases, lowering the natural gas prices required for breakeven with electricity. The displacement credit depends on the amount of fuel saved from the displaced space heating unit, and the cost of hooking up the cogeneration unit. The thermal load factor will determine the amount of electricity that can be produced assuming the cogeneration unit operates to supply baseload thermal demand. The analysis of this point is similar to that described above for the new buildings.



Photo credit: OTA staff

Some older commercial buildings could be retrofitted for cogeneration, but the economics of such retrofit will depend on the price of electricity and the price and availability of cogeneration fuels—primarily natural gas

As an example of these considerations, we examine a combined-cycle cogeneration unit of about 10 MW (a size typical for a very large building), operating to supply 50 percent of a building's heat load. Further, if this unit can operate at a high electric load factor of 85 percent or more, this unit could produce electricity that would compete with central station electricity priced at 5cents/kWh if natural gas cost $4.50/MMBtu or less (all in 1980 dollars) (34). * The na-

***This calculation assumed a value for the capacity factor in order to determine a breakeven natural gas price. In actual operation it is the other way around. Under the conditions that the building owner's goal is minimum cost and that the cogeneration unit is sized**

tional average price of natural gas in the commercial sector commercial sector for the third-quarter of 1981 was about $3.50/MMBtu. Therefore the combined-cycle system described above appears to have a definite economic advantage for regions where electricity is selling for 5cents/kWh or greater.

There is another set of conditions that would allow natural gas-fired cogeneration to be economically competitive even if the price relationships just calculated do not hold. If the price that utilities must pay to cogenerators for power is set high enough by the State public utility commission, then cogeneration would be installed even if its electricity production costs were greater than the retail price for electricity. Further, depending on the purchase power price under PURPA, cogenerated electricity from a natural gas unit could cost more than new, central station coal-fired generation and still be economically preferable to the latter. In California, for example, the purchase price is based on the cost of oil-fired generation. Many industrial and commercial establishments see this as a very attractive opportunity because their natural gas prices are below the fuel oil prices paid by the utility. Therefore, these cogenerators are willing to enter into agreements with utilities in California to sell them electricity for the next 5 to 10 years.

Even though natural gas prices will increase and probably surpass those of residual oil during that period, the cogenerators will still receive a high return because of their higher overall efficiencies. Further, the utilities will be able to replace current oil-fired capacity more quickly than by more conventional means—i.e., coal or nuclear central station. For the period beyond 1990, however, coal-fired, central station capacity is planned and probably will be cheaper than natural gas-fired cogenerated electricity as the ultimate replacement for the existing oil-fired capacity. However, successful coal gasification with combined-cycle generation could alter the economics back to favoring cogeneration. More is discussed about this last point below.

The California case is not typical of fuel oil dependent utilities, primarily because such utilities located in other States usually can purchase power from neighboring utilities with an excess of coal or nuclear power. In California, power purchases generally are not an option because of limited transmission interties with other systems. The California case does, however, point out the potential for natural gas-fired cogeneration in the next 10 years. We have also not calculated that potential for new buildings **since** that analysis determines longrun generation needs only (hence longrun avoided costs).

The final point about cogeneration's potential in existing buildings concerns the financing conditions currently available to prospective cogeneration owners. Financial factors will help determine the cost of electricity and thermal energy from a cogenerator. The current high interest rates and short loan terms available to non utility investors for investments in building energy systems are acting to severely limit cost effective investments of any type—conservation or cogeneration.

In a study released by OTA, Energy Efficiency of Buildings in Cities (18), these current financial conditions are partially responsible for keeping about 60 percent of the otherwise cost-effective conservation retrofits identified in that study from being installed. Although OTA did not examine cogeneration in this same way, it is likely that cogeneration retrofits will be affected similarly, perhaps even more so because of the much higher initial investment levels per building needed for cogeneration than conservation. This is one place where utility or third-party ownership would be potentially very helpful. In the former case, utilities would be able to secure longer term loans at lower interest rates than commercial investors. In addition, utilities possess the engineering skills needed to install and hook up the units. Utilities currently are prohibited from owning

to supply baseload thermal energy, cogeneration would be operated whenever it can produce electricity at a cost less than or equal to the combined cost of central station electricity and separate thermal energy production (e.g., a conventional building heating system). The former cost depends on the price of the fuel for cogeneration (natural gas in this case), various financial parameters (interest, taxes, debt/equity ratio, etc.), and O&M costs. The cogeneration unit must be sized to provide baseload thermal energy because the cost of electricity alone from the cogenerator will nearly always be greater than the cost of electricity from a central station plant due to economic and efficiency reasons. It is therefore necessary for the cogenerator to be able to displace building heating fuel and obtain a cost credit in order to meet the minimum cost criteria.

more than so percent of a cogeneration unit and still qualifying for PURPA benefits.

Aside from this legal barrier, however, a potentially more important one exists as a result of the low thermal load factors in individual buildings. Because of this, cogeneration that supplies baseload thermal demand to these buildings may not produce excess electricity for sale to the grid. Unless such electricity is produced, utilities cannot be expected to invest in commercial cogeneration. Raising the load factor, for example, by supplying clusters of buildings (each with different load patterns), would be one way to eliminate this problem. Finally, third-party ownership with lease arrangements may also be promising because of the provisions of the new tax laws.

Although we have not attempted to project the retrofit potential for cogeneration, it is probable that movement in that direction will be tentative for the next few years, primarily due to unfavorable financial conditions. Even should interest rates and loan terms ease in the near future, however, there still will be competition with conservation investments, which will reduce the technical potential for cogeneration in a given building. Further the uncertainty over natural gas is likely to remain until resolution of pricing policy and elimination of end-use restrictions (the Fuel Use Act, see ch. 3). Once these conditions are cleared, however, and if natural gas prices are low enough, or purchase power rates are high enough, there could be considerable interest and activity in cogeneration retrofits in the last half of the 1980's. If new technologies that can use solid fuels—through gasification-are successfully developed by then, further stimulus would exist.

Fuel Use

In addition to investigating the changes in utility capacity additions and operating characteristics that might result from cogeneration, OTA also analyzed the change in proportion of fuels used in the sample utility regions to determine if cogeneration would displace any oil or gas. As mentioned earlier, the analysis assumes that all cogeneration equipment uses distillate fuels in Regions 1 and 2 and natural gas in Region 3. The results of the calculations of fuel consumption in 1990 and 2000 for the "no-cogeneration" standard scenarios are shown in table 44.

Not all scenarios are shown in table 44 because the total fuel used and the proportion used by each fuel type are similar between the base-case ("NO COG EN") and the cogeneration scenarios for each region. Cogeneration accounts for less than 1 percent of the total fuel used in all cogeneration scenarios, and the total fuel and proportionate fuel use change less than 1 percent between the two types of scenarios. As expected for our fuel price and use assumptions, because cogeneration cannot compete with baseload coal-fired electricity, cogenerators operate only a small fraction of the time (when they can supply intermediate and peak demand electricity) and therefore use only a small fraction of the total fuel. A further caveat is the exclusion of existing buildings' thermal demand, as explained earlier.

Because the model was restricted to the case where natural gas and distillate prices were equal, no results were obtained for the case when natural gas prices fall low enough so that cogenerated power could compete with central station electricity. OTA calculated this gas price, given

Table 44.-Base-Case Standard Scenario Fuel Use, By Generation Type and Year

Scenario	Percentage of total fuel used					Total annual fuel use (10^{12} Btu)
	Base	Intermediate	Peak	Cogeneration	Steam boiler	
1990						
I-NO COGEN 98		1	0			64.2
2-NO COGEN 97		0		0	2	62.5
3-NO COGEN 95		2	0	o	3	74.0
2000						
I-NO COGEN 97			0	0	2	69.3
2-NO COGEN 95		0		o	4	74.4
3-NO COGEN 94		1	0	o	5	95.1

SOURCE: Office of Technology Assessment.

the set of costs and technical assumptions as well as the average price of electricity determined in our analysis (ranging from 3.3cents/kWh to 7.0cents/kwh). Using our assumptions of $575/kW capital cost for the cogenerator, 0.8cents/kWh O&M cost, and an overall heat rate of 9,750 Btu/kWh with an 80-percent combined heat and electric power efficiency, we can calculate the breakeven price range of natural gas. For a cogenerator capacity factor of 0.85 this price ranges between $2.55/MMBtu to $8.40/MMBtu, which brackets the current commercial natural gas price of $3.50/MMBtu (in 1980 dollars). Again, the capacity factor will be determined by the cost of electricity produced by the cogenerator and, therefore, the cost of natural gas. This is a complex interaction because lower capacity factors reduce the fuel displacement credit, thus increasing the net cost of cogenerated electricity.

Similar arguments can be applied for the new technologies not considered in the model. The ability of these newer technologies to enter the market depends ultimately on the cost of steam and power they produce. Currently a few systems are being developed that will allow these costs to be estimated. One such system is the Coolwater combined-cycle, coal gasification system recently announced (1 1). Although that system is being designed to supply electric power to the Southern California Edison system, successful demonstration of the technology could lead the way to cogeneration applications. An unpublished analysis of the economics of the Coolwater facility as a cogeneration plant estimates an electricity cost of about 3.6cents/kWh, including a credit for heat recovery (fuel displaced by byproduct steam from the cogenerator) of about 4.6cents/kWh (34). This price for electricity is lower than the marginal cost of electricity from a new central station coal plant, although higher than the average cost calculated in some of the cases of our analysis. The calculation, however, assumes a return on equity that may be less than will be required of new plants such as the Coolwater facility. * In addition, using such facilities for commercial buildings entails the development of coal handing, delivery, and storage facilities plus the need for air quality control equipment. All will add expenses to these systems (which were not included in the calculation cited above), and the question of the economic attractiveness of these advanced cogeneration systems is still open. Biomass and urban solid waste have been proposed as fuels for gasification-cogeneration systems, and, in some cases, are under development. The economic analysis of these systems is similar to that given for the Coolwater facility. One exception is that for proposed solid waste units, a credit is available in the form of the tipping fees usually charged to dispose of these wastes.

A recent development concerning biomass cogeneration is a combined-cycle system using a direct-fired combustion turbine fueled by pulverized wood. Using hot gas cleanup technology developed in the British pressurized fluidized bed combustion program, turbine blade damage is reduced to an acceptable level. A 3-MW test unit is currently being designed and built by the Aerospace Research Corp. of Roanoke, Va. Economic analysis of this technology in a cogeneration system looks very promising and may be competitive with coal-fired central station electric power (35). As with other systems described in this chapter, the economics are highly dependent on the electric load factor. Consequently, they are more promising for industrial sites then for buildings.

COAL-LIMITED SCENARIOS

While few changes in fuel use are observed in 1990 and 2000 between the cogeneration and the base-case standard scenarios, some changes do occur in the special scenarios that limit coal-fired capacity additions (thus allowing other types to operate more frequently than they would without these limitations). As mentioned earlier, four special scenarios that limit baseload additions were constructed: two allowing cogeneration and two restricting cogeneration. Figure 58 shows that the addition of cogeneration to the sample sys-

•In the particular example cited, the return on equity assumed was 10 percent along with a 50/50 debt-equity ratio and a real interest rate on debt of 3 percent. If we repeat the calculation with a 15 percent return on equity and a 5 percent real interest rate on debt, values which we have found to be operative in favor of synfuels projects (21), the cost of electricity increases to 5.9cents/kWh. Utility financing, however, would allow a lower return even for a first-of-a-kind plant, perhaps close to that assumed in the original calculation. This argues in favor of utility ownership of such cogeneration facilities.

Figure 58.—Fuel Used in 1990 and 2000 or Coal= Limited Scenarios

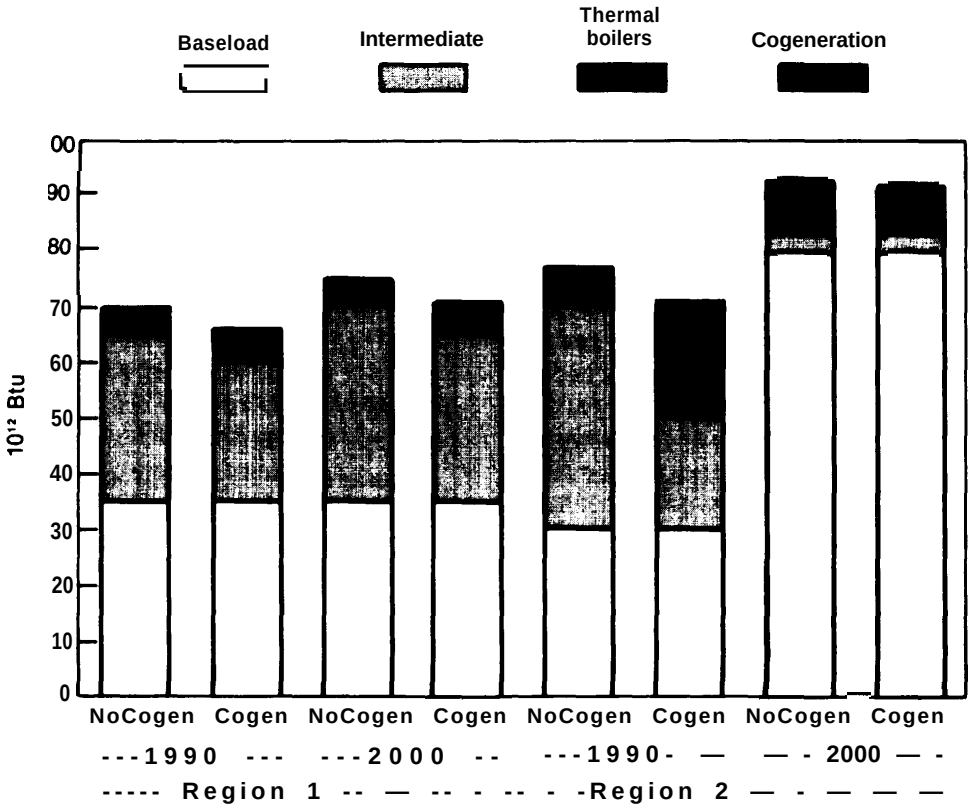

SOURCE: Off Ice of Technology Assessment.

terns decreases total fuel use when the cogeneration scenarios (I-LOW COST COGEN/COAL-LIMITED and 3-LOW COST COGEN/COAL-LIMITED) are compared to their respective base-case scenarios (I-NO COGEN/COAL-LIMITED and 3-NO COGEN/COAL-LIMITED). This is a result of two factors. First, there is considerably more cogeneration that operates at higher capacity factors, as shown above. Second, this greater penetration allows the higher overall fuel efficiency of cogeneration to significantly affect total fuel use.

Most of the decrease in overall fuel use in the coal-limited scenarios (when 1- and 3-LOW COST COGEN/COAL-LIMITED are compared to 1- and 3-NO COG EN/COAL-LIMITED, respectively) results from the decrease in fuels used by the intermediate electric generating capacity. While the baseload coal consumption remains identical between the base-case and the cogeneration scenarios, the efficiency of the cogenerators, combined with the reduction of intermediate capacity generation, reduces overall fuel used for the two special coal-limited cogeneration scenarios. Table 45 compares the use of oil and gas for the four coal-limited scenarios.

In summary, cogeneration has only a small effect on utility fuel use as long as electricity can be produced more cheaply with other types of technologies. However, in the special coal-limited scenarios, cogeneration may cause less total oil to be used and may displace fuel used by the intermediate capacity.

Sensitivities to Changes in Assumptions

In addition to analyzing fuel use and operating characteristics with and without cogeneration, we must also determine the sensitivity of this analysis to changes in some of the assumptions used in

Table 45.-Comparison of Fuel Use for Coal-Limited Scenarios

	Region 1 coal-limited scenarios (net change in percent[a])		Region 3 coal-limited scenarios (net change in Percent[a])	
	1990	2000	1990	2000
Total fuel	–1	– 2	–7	–1
Total residual	– 6	– l o		—
Total distillate/natural gas	+155	+ 121	–13	+3
Total oil	– 3	– 5	–13	+3

aA negative change means that the coal-limited cogeneratlon scenarios use less fuel than the no Cogeneration coal-limited scenarios; a positive change means that the cogeneratlon scenarios use more fuel. All fuel is measured In Btu-equivalents.

SOURCE: Off Ice of Technology Assessment.

the scenarios. One important assumption is the cost for installing and operating cogenerators. As mentioned above in the discussion of capacity additions, OTA formulated a scenario, 2-ZERO COST COG EN, that uses zero capital cost cogenerators for Region 2.

The sensitivity of our results to the costs of cogeneration is determined by comparing the types of capacity that are installed and how the utility system uses cogeneration for two scenarios: the 2-ZERO COST COGEN scenario with the 2-LOW COST COG EN scenario. While the ZERO COST scenario installs 81 percent of its capacity as cogeneration, the LOW COST scenario installs 20 percent. Despite the difference in cogeneration capacity between the two scenarios, the fuels consumed by cogeneration are only 2 percent of the total fuels used in each scenario. In other words, for our fuel price assumptions, baseload electricity from coal is still cheaper so it is used to meet the baseload demand. In the zero capital cost case, however, cogenerators can supply thermal energy much more cheaply than boilers, so cogeneration is being used primarily to meet space heating demands plus as much intermediate and peak electricity demand as possible. Zero-capital cost cogeneration therefore is used as an inexpensive heater, without displacing any coal-fired generation. Thus, the cogeneration in this scenario displaces some of the peakload equipment, and does not use its steam during peak summer days.

Summary

By using the DELTA model and our set of technical and economic assumptions, OTA was able to determine the interaction of cogeneration with several sample centralized utility systems. Under most circumstances, cogeneration additions in new buildings were very limited because they could not compete economically with central station coal-fired generation. As a result, fuel usage did not change greatly from an all-centralized system. When coal-fired expansion was limited, however, cogenerators penetrated the utility system significantly and provided much of the heating demands and peak and intermediate electricity for the system.

Three specific conclusions can be made from this analysis. First, given the assumptions, cogenerated electricity cannot compete with central station, coal-fired capacity. Therefore, in commercial buildings, cogeneration will only contrib ute to peak and intermediate demands and will only operate when it can supply such electricity. This holds for even a zero capital-cost cogenerator. Lower natural gas prices, however, could greatly increase the opportunity for cogeneration. in fact, natural gas prices somewhat above current gas prices would allow cogeneration to compete with new, baseload, coal-fired central station capacity. Alternatively, successful development of gasification technologies that can produce moderately priced (about $5/MMBtu) medium-Btu gas from coal, biomass, or solid waste could expand the competitive position of cogeneration. Finally, cost relationships could be determined by high utility purchase rates for cogenerated power that would also make natural or synthetic gas-fired cogeneration preferable regardless of the actual Iongrun marginal costs **of new** COA fired capacity.

Second, existing electric generating plants usually can provide power more cheaply than

new cogenerators. Even if oil is used for these plants, the cogenerator capital costs dominate any gains from more efficient fuel use; and this domination results in little significant penetration of cogeneration. However, lower cost natural gas could change these economics. In some regions this is the case now where natural gas-fired cogeneration is the preferable choice to existing oil-fired central stations that are near retirement. Third, if oil- and natural gas-fired equipment is used, the best opportunity for cogenerators is in regions with high heating loads (about 6,000 heating degree-days) and moderate electrical growth (at least 2 percent annual growth in peak and total energy).

RURAL COGENERATION

Although industrial and commercial sector cogeneration opportunities are recognized widely, little attention has been paid to cogeneration applications in rural areas, particularly in agriculture. The rural cogeneration potential is not so large as in the industrial sectors, but could present fuel and cost savings on farms or in rural communities. The principal rural cogeneration opportunities arise where there are existing small powerplants or where agricultural wastes can be used as fuel. Promising cogeneration applications for rural communities include producing ethanol, drying crops or wood, and heating livestock shelters.

Small, rural municipal powerplants can gain significant economic and fuel conservation advantages with cogeneration if a market for the thermal energy is available. Many of these powerplants use reciprocating internal combustion engines or combustion turbines as their prime movers. Dual fuel engines predominate (generally burning natural gas, with small amounts of fuel oil to facilitate ignition), but diesel engines and natural gas fueled spark ignition engines also are common. Generally, these small rural powerplants have a peak electric power rating of 10 MW or less, and they operate at around 33 percent efficiency in producing electricity (i.e., 33 percent of the fuel input energy is converted to electricity and 67 percent is exhausted as waste heat). If only half of the waste heat from these plants were used, the energy output would double (IS).

Table 46 shows the distribution and maximum temperature of waste heat sources in a supercharged diesel engine. As shown in this table, most of the waste heat is in the exhaust gases. The engine cooling jacket and lubrication system together produce almost as much waste heat as the exhaust gases, but at a much lower temperature (15).

Table 4&—Distribution of Waste Heat From a Supercharged Diesel Engine

Heat source	Percent of total waste heat	Maximum temperature (F°)
Engine cooling jacket	20	165-171
Aftercoolers [a]	15	104-111
Lubrication system	10	140-150
Exhaust gas[b]	55	797-696

aAftercoolers generally are used In temperate cllmates, with maximum use occurring In the summer.
bIn engines that are not supercharged, exhaust gas temperatures maybe cooler, approximately 572° to 662° F.

SOURCE: Randall Noon and Thomas Hochstetler, "Rural Cegeneratlon: An Untapped Energy Source," Public Power January-February 1981.

The hot exhaust gas from an existing powerplant fueled with natural gas can be used directly in a waste heat boiler. Alternatively, water can be preheated via heat exchange with the aftercoolers, lubrication system, and cooling jacket, then flashed into dry steam through heat exchange with the exhaust gas. Steam temperatures as high as 850° F can be obtained in this manner (15).

For on-farm systems, a small powerplant (with direct heat recovery or steam production, as described above) could be connected with an anaerobic digester (using animal wastes as the feedstock) producing biogas, or with a small gasifier that converts biomass (e.g., crop residues) to low- or medium-Btu gas. However, as described in chapter 4, further development of combustion turbine or internal combustion engine technol-

ogy may be necessary if these systems are to operate efficiently for long periods of time with low- or medium-Btu gas derived from lower quality feedstocks.

Potential Applications

Ethanol production is one promising application for rural cogeneration. Ethanol has been shown to be a useful fuel for spark ignition engines, and it can be produced readily from renewable biomass feedstocks (e.g., grains and sugar crops). If ethanol is used as an octane-boosting additive in gasoline, and if the ethanol is distilled without the use of premium fuels, then each gallon of ethanol can displace up to about 0.9 gallon of gasoline. However, if ethanol distilleries are fueled with oil, then ethanol production for gasohol could actually mean a net increase in oil use. * Moreover, the premium fuels usually considered for ethanol distilleries–diesel fuel and natural gas–already are used widely in the agricultural sector but often are in short supply. Using these fuels in distilleries could aggravate any shortages.

One way to improve ethanol production's premium fuels balance is to cogenerate with existing small rural powerplants. The waste heat would be flashed into **dry steam (as described above), and the steam distributed into the distillation columns of the ethanol recovery system. To facilitate cooking (the process stage where starch grains are ruptured** for effective enzymatic action), steam above atmospheric pressure and at about 300° F can be bled from the exhaust gas heat exchanger. In addition, warm water can be bled from ***the*** aftercooler heat exhanger to soak the milled corn and speed up water absorption. Finally, heat for drying wet stillage into distillers dried grain (which can be used as a livestock feed supplement) can be obtained either directly from the exhaust gas in a natural gas-fired plant, or by placing an air-to-exhaust gas heat exchanger downstream from the steam-producing heat exchanger (15). Figure 59 shows a schematic of ethanol cogeneration with diesel engine heat recovery.

The waste heat from a 1 -MW powerplant operating at full load (33o full-time operating days) is sufficient to produce around 600,000 gallons of anhydrous ethanol per year with wet byproduct, or 300,000 to 400,000 gallons annually with dried distillers grain byproduct (15).

Cogeneration also can be used for **grain drying,** which requires relatively low-temperature heat. Seed drying requires a temperature of approximately 110° F, while milling drying requires 130° to 1400 F depending on the crop, and animal feed drying needs around 180° F. These temperatures are well below those of exhaust gases, and thus, for grain drying, the exhaust gas of natural gas-fired powerplants can be mixed with flush air and used directly (i.e., without heat exchangers). For plants that use fuels other than natural gas, a heat exchanger may be required in order to recover the energy without contaminating the grain with the exhaust gas. Due to the low temperatures needed, waste heat from the cooling water or lubrication oil also can be recovered and used to dry grain (15).

The waste heat from a 1-MW powerplant could dry grain at a rate of approximately 370 bushels per hour. In the case of field-shelled corn, this would reduce the moisture content from around 25 to about 15 percent—a safe level for storage. That grain-drying rate is comparable to that of many commercial dryers, and is sufficient for the grain-drying needs of small communities (1 5). However, grain drying is a seasonal activity and other uses for the waste heat would have to be

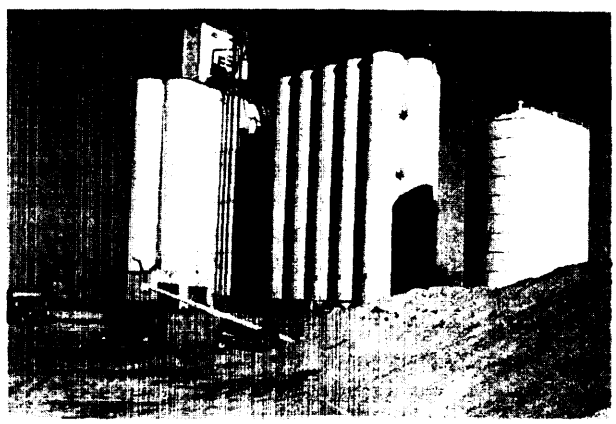

Photo credit: Department of Agrlculture

Small existing powerplants can be retrofitted for cogeneration with the thermal output used for applications such as drying grain

***See *Energy From Biological Processes (OTA-E-124;* July 1980) for an in-depth analysis of ethanol production.**

Figure 59.—Ethanol Cogeneration With Diesel Engine Waste Heat Recovery

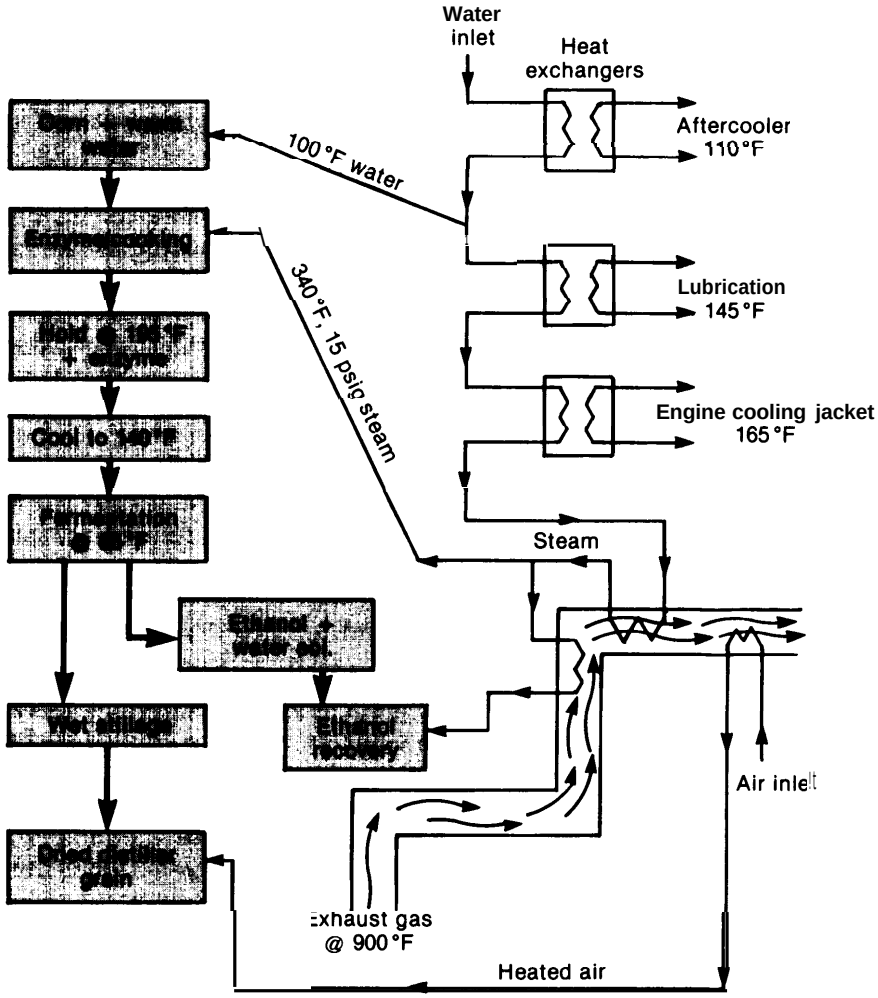

SOURCE: Randall Noon and Thomas Hochstetler, "Rural Cogeneration: An Untapped Energy Source," *Public Power* January-February 1981).

found in the off-seasons in order to optimize the efficiency of the system.

In most cases, applying cogeneration to grain drying using existing powerplants will cost only slightly more than a conventional grain drying facility. A relatively small additional investment would be required for the engineering design needed to interface the exhaust stacks (or heat exchanger) with the drier. The grain drying would need flexible scheduling in order to coordinate with the powerplant's operation, especially when expected electricity demands do not materialize, but this is a relatively minor inconvenience. A more important concern is that rural grain elevators usually have low priority or interruptible service from natural gas suppliers (unless they use propane). Any resulting shutdowns can be a serious problem during a harvest season that is wet and cold, because the grain could spoil before it can be dried.

Drying crops with cogeneration can have significant dollar and fuel savings advantages. If the cost of waste heat is set at so percent of the cost per Btu for natural gas, then a facility drying 500 bushels of grain per hour would save $11.25 per hour compared to the cost of using a separate

natural gas-fired dryer using $2.50/MCF gas for continuous operation, and the fuel cost savings would amount to $7,000 per month (1 5).

Wood drying is similar in many respects to grain drying. Both commodities are dried prior to shipping to minimize moisture weight. Historically, both drying processes have relied on relatively cheap and plentiful natural gas supplies, but can do so no longer. Furthermore, most wood drying kilns, like grain drying facilities, require relatively low-temperature heat–104° to 117° F–although a few kilns may need temperatures above 212° F (1 5).

Because most modern wood drying kilns use natural gas combustion units, the exhaust gas from a small powerplant can be substituted easily for the natural gas burner. A 1-MW powerplant will produce approximately 8,000 MWh of usable drying heat annually (based on 24 hours per day, 330 days per year operation). This is sufficient to dry as much as 11 million board feet of air dried hardwood or 6.5 million board feet of green softwood per year.

As with grain drying, substantial savings can be gained through cogeneration/wood drying. Because the basic design would not change in a cogeneration retrofit, the capital and installation costs of a cogenerating unit would not be substantially more than those of a new conventional gas-fired kiln. It is estimated that 2 to 5 MCF of natural gas would be saved for each 1,000 board feet of lumber that is dried with cogeneration. For the 1-MW powerplant drying 11 million board feet, this would mean a savings of 22000 MCF/yr. If the cogenerated heat were sold at 50 percent of the value of $2.50/MCF natural gas, $27,000 per year could be saved in fuel costs (1 5). Additional savings would accrue from the electricity generation.

Fuel Savings

The three rural cogeneration applications described above—producing ethanol and drying grain or wood–rely on existing small powerplants fueled with oil or natural gas. In each case, fuel savings is assumed to result when the plant's waste heat is recovered and substituted for a second oil- or gas-fired facility. However, as discussed earlier in this chapter, the fuel saved may not always be oil. For example, recovering the waste heat from a diesel oil fueled engine and substituting it for heat previously provided by a natural gas combustion unit will save gas but increase oil consumption. Similarly, if the waste heat from a spark-ignition engine burning oil is substituted for a boiler using coal or biomass, no oil would be saved.

As a result of these fuel use considerations, rural cogeneration opportunities that use fuels other than oil (i.e., that do not rely on waste from an existing powerplant) merit a good deal of attention. These opportunities are based on the direct firing of cogenerators with fuels derived from plentiful rural resources.

Wood wastes have long been the traditional fuel in the forest products industry, which historically has been the largest industrial—and rural—cogenerator. The cogeneration potential in the forest products industry was discussed earlier in this chapter. At this point it will be sufficient to mention that, in the wood drying example cited above, a steam turbine and boiler can be substituted for the powerplant and natural gas-fired kiln. Although the capital costs of the boiler system would be higher (about one boiler horsepower is needed to dry 1,000 board feet of hardwood), and it would not produce as much electricity, this system can burn wood wastes or coal and thus save oil or natural gas. Similarly, fuel savings in ethanol distilleries will be greater if coal or biomass is used as the primary fuel for the cogenerator. Savings also can be achieved in grain drying but the potential for contaminating the grain would be greater unless heat exchangers were used.

Alternatively, internal combustion engines or gas turbines can be adapted to **alternate fuels.** These technologies, if successful, would require a smaller investment for equipment than steam turbines, an important consideration for small dispersed cogenerators. In some cases, fuel flexibility can be achieved through advanced engine design, advanced combustion systems such as fluidized beds, or fuel conversion (synthetic gas or oil). The technical and economic aspects of using fuels

other than oil or natural gas in conjunction with combustion turbines or internal combustion engines are discussed in detail in chapter 4. Two applications that are especially promising for rural areas include gasification of crop residues and anaerobic digestion of animal wastes. However, small powerplants also can be modified to accommodate alternate liquid fuels such as ethanol and methanol, which can be made from relatively plentiful rural biomass resources; these liquid fuel options are discussed in more detail in OTA's report on ***Energy From Biological Processes.***

Gasification of crop residues has been suggested as a means of providing relatively cheap nonpremium fuels for rural cogenerators. One demonstration project being developed in lowa uses downdraft gasifiers to produce low-Btu gas from corn stover for use in retrofitted diesel engines. Some of the probable end uses for the thermal energy include grain drying, **green houses,, dairies, food processing, space heating, or drying** the corn cob feedstock (22).

Downdraft gasifiers were selected for this project because they can generate producer gas that has relatively low amounts of tars and other hydrocarbons and is suitable for use in steam generators, directly fired dry kilns, or internal combustion engines. Field tests with downdraft gasifiers in California have produced diesel quality producer gas successfully from corn cobs, walnut shells, and other crop residues (32).

The demonstration project focuses on stationary diesel engines for several reasons. First, the wide number of domestic diesel models in place allows a range of retrofit considerations to be evaluated. Second, a number of tests are underway around the country using dual-fuel diesels fired with 80 percent producer gas and 20 percent diesel oil. European firms have offered efficient commercial producer gas/diesel packages capable of continuous operation on 90 percent gas/10 percent diesel oil since World War 1. Third, a large number of functional diesel powerplants are standing idle because of high oil prices. A recent survey showed that more than 70 lowa communities have diesel generators with a total capacity of over 300 MW that operate at an average capacity factor of less than 2 percent (22).

Finally, the projects will use corn cobs as the feedstock because this is a relatively plentiful, clean fuel with a low ash and sulphur content. Moreover, they require no special handling (e.g., baling, chopping) and they are easy to gather and store. * Other possible biomass gasification combinations for cogeneration include other types of organic wastes (e.g., crop residues, wood waste) and wood from excess commercial forest production or intensively managed tree farms.

Cost estimates for this project are shown in table 47. Two rural test sites designed to demon-

***For an in-depth analysis of the technical, economic, and environmental considerations related to the use of crop residues as a fuel or feedstock, see** *Energy From Biological Processes (OTA-E-124, July 1980).*

Table 47.—Model Community Gasification/Diesei Eiectric Generation Energy Cost Estimate

Operating data from the fuel rate calculations:		
Energy output: Maximum, 1,000 kW; average, 750 kW		
Gas input for electrical powec 10.18 MMBtulhr		
Solid fuel input for electrical power: 1,810 Ib/hr		
Fuel oil input for electrical power: *0.825* MMBtulhr at 7.5 percent of total energy input (5.9 gal/hr)		
Costs-gasiWr plant:		
Equipment:		
Gasifier system	**$259,610**	
Installation	**64,800**	
Capital cost total	**324,410**	
Annualized at 5°/0 for 20 years		**$33,670**
Diesel retrofit @ $150/kW	**150,000**	
Annualized at 8.25% for 20 yrs.		**15,564**
Insurance at 2.5°/0 of plant cost		**6,490**
Total fixed costly r.		**$55,724**
@ 6,570,000 kWh/yr, fixed cost = $0.0085/kWh		
Operational cost		
6,570 **hr/yr, operating at 75°/0 capacity:**		
Fuel handler, 1 person, 40 hr/wk, w/fringes		**31,200**
Maintenance charge @ 5°/0 of plant cost		**16,200**
Fuel costs:		
Diesel oil @ $1.15/gal x 38,716 gal		**44,523**
Corn cobs at 18.80/T x 5,979 T/yr		**112,400**
Total operational costs		**$204,323**
6.57 MMkWh/yr, operational costs/kWh = $0.0311		
Total cost		**.$O.0396/kWh**
Cost ***of hot producer gas from gasifier***		
Operating at 90°/0 capacity; with gas conversion efficiency of 850/o		
1,810 lb cobs/hr x 8,760 hr x 0.90 = 7,135 T/yr @ $18.80~ = (fuel)		**$134,138**
Labor, maintenance, amortization, Insurance.		**87,560**
Total cost. .$221,698(7,135 T cobs x 15 MMBtu x 0.85 efficiency) = $2.441 MMBtu		

SOURCE: J. J. O'Toole, et al., "Corn Cob Gasification and Diesel Electric Generation," in *Energy Technology VIII: New Fuels Era* Richard F. Hill (cd.) (Rockville, Md.: Government Institutes, Inc., 1981).

strate the technical and economic feasibility of downdraft gasifiers using corn cobs to produce low-Btu gas for diesels have been identified. The sites (in Iowa) have different diesel models and usage patterns as well as different biomass resource concentrations (one town has a local source of excess corn cobs, one must set up a collection and transportation system on neighboring farms). Thus, the sites will allow a sensitivity analysis on a wide range of variables, including energy prices, Btu value, moisture content, farmer participation rate, and cob processing costs. Economic modeling for the project will yield data on agricultural production for the site, the quantity of cobs used, the system kWh costs, emissions, and energy balance. If these and other tests yield positive results, then gasification of crop residues could become an important source of energy for diesel cogeneration in rural communities—one that enables those communities to use existing local resources and equipment at a cost competitive with energy from central station powerplants.

A second rural cogeneration option is the **anaerobic digestion of animal wastes** to produce biogas (a mixture of 40 percent carbon dioxide and 60 percent methane). The national energy potential of wastes from confined animal operations is relatively low—about 0.2 to 0.3 Quad/yr–but other important benefits are that anaerobic digestion also serves as a waste treatment process and the digester effluent can be used as a soil conditioner, or dried and used as animal bedding, or possibly treated and used as livestock feed. Digesters for use in cattle, hog, dairy, and poultry operations are now available commercially and are being demonstrated at several sites in the United States. * Wastes from rural-based industries (e.g., whey from cheese plants) also are being used as a feedstock for farm-based digesters.

In a typical digester system (see fig. 60), a settling pond is used to store the manure prior to digestion. The digester consists of a long tank into which the manure is fed from one end. After several weeks, the digested manure is released at the other end and stored in an effluent lagoon.

Figure 60.-Anaerobic Digester System

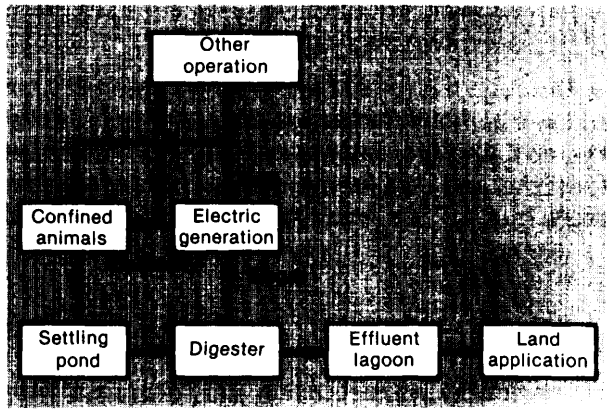

SOURCE: Office of Technology Assessment.

Gas exits from the top of the digester tank, the small hydrogen sulfide content is removed if necessary, and the biogas is used to fuel an internal combustion engine that drives an electric generator. The system supplies electricity for onsite use (or for export Off-Sit@. The heat from the engine can be used onsite for a variety of purposes, including heating the animal shelter or a greenhouse (that could also use the soil conditioning effluent), or for crop drying, or even residential space heating.

Finally, it should be noted that the above applications can be combined in **farm energy complexes** that integrate methane and alcohol systems so that waste heat and byproducts are utilized more fully. For example, the waste heat from generating electricity with biogas can be used in alcohol production, while spent beer from the distilling process can be used as a digester feedstock. Moreover, the waste heat from a generator often is used to help maintain an optimum digester temperature.

Summary

Significant energy and economic savings can be achieved with cogeneration in rural areas. Communities can improve the economics of operating small powerplants by recovering waste heat for use in distilling ethanol, drying grain or wood; heating homes, greenhouses, or animal shelters, and other applications; or by retrofitting existing powerplants to accommodate alternate

*For a detailed analysis of anaerobic digestion of animal waste, see *Energy From Biologica/ Processes* (OTA-E-1 24, July 1980).

fuels. In addition, significant oil savings can be achieved if the cogenerator uses alternate fuels or replaces two separate oil-fired systems.

Although the rural cogeneration potential is not so large as that in industry and urban applications, the cost and fuel savings can be very important for farms and rural communities. in rural economies, much of the gross income escapes the local economy rather than being recirculated to produce a second round of local income. Developing cogeneration opportunities could double the productive energy output of rural powerplants, creating significant local economic expansion in both public revenues (from electric and thermal energy sales) and private income (from new jobs) without increasing the base demand of energy.

CHAPTER 5 REFERENCES

1. American Gas Association, *An Energy and Economic Analysis of Gas-Fired Cogeneration in Commercial and Industrial Applications* (Arlington, Va: American Gas Association, 1981).
2. American Gas Association, *The Gas Energy Supply Outlook: 1980-2000* (Arlington, Va: American Gas Association, January 1982).
3. Bullard, Clark, University of Illinois at Urbana-Champaign, private communication to OTA.
4. California Energy Commission, *Commercial Status: Electrical Generation and Nongeneration Technologies* (Sacramento, Calif.: California Energy Commission, P102-8O-OO4, April 1980).
5. California State Department of Water Resources, et al., *Cogeneration Blueprint for State Facilities* (Sacramento, Calif.: Department of Water Resources, March 1981).
6. DOW Chemical Co., et al., *Energy Industrial Center Study* (Washington, D. C.: National Science Foundation, June 1975).
7. Energy Information Administration, *Analysis of Economic Effects of Accelerated Deregulation of Natural Gas Prices* (Washington, D. C.: U.S. Government Printing Office, August 1981).
8. Energy Information Administration, *Annual Report to Congress, Volume Two* (Washington, D. C.: U.S. Government Printing Office, April 1981).
9. Energy Information Administration, *Typical Electric Bills, January 1, 1980* (Washington, D. C.: U.S. Government Printing Office, December 1980).
10. Exxon Corp., *Energy Outlook 1980-2000* (Houston: Exxon Corp., December 1980).
11. "Gasification Plant Finds Private Aid," *The New York Times,* Dec. 14, 1981.
12. General Energy Associates, *Industrial Cogeneration Potential: Targeting of Opportunities at the Plant Site* (Washington, D. C.: U.S. Department of Energy, 1982).
13. Harkins, William, testimony before the New York Public Service Commission, Case 27574, Nov. 10, 1980.
14. Mitchell, Ralph C., Ill, Arkansas Power & Light Co., private communication to OTA, November 1981.
15. Noon, Randall, and Hochstetler, Thomas, "Rural Cogeneration: An Untapped Energy Source," *Public Power,* January-February 1981.
16. North American Electric Reliability Council, *Electric Power Supply and Demand 1981-1990* (Princeton, N.J.: North American Electric Reliability Council, July 1981).
17. Office of Technology Assessment, U.S. Congress, *Application of Solar Technology to Today's Energy* Needs, OTA-E-66 (Washington, D. C.: U.S. Government Printing Office, June 1978).
18. Office of Technology Assessment, U.S. Congress, *Energy Efficiencyof Buildings in Cities, OTA-E-168* (Washington, D. C.: U.S. Government Printing Office, March 1980).
19. Office of Technology Assessment, U.S. Congress, *The Future of Liquefied Natural Gas Imports,* OTA-E-1 10 (Washington, D. C.: U.S. Government Printing Office, March 1980).
20. Office of Technology Assessment, U.S. Congress, *Residential Energy Conservation, OTA-E-92* (Washington, D. C.: U.S. Government Printing Office, July 1979).
21. Office of Technology Assessment, U.S. Congress, *Synthetic* Fuels *for* Transportation, OTA-E-185 (Washington, D. C.: U.S. Government Printing Office, September 1982).
22. O'Toole, J. J., et al., "Corn Cob Gasification and Diesel Electric Generation," in *Energy Technology V///: New Fuels Era,* Richard F. Hill (cd.) (Rockville, Md.: Government Institutes, Inc., 1981).
23. Resource Planning Associates, Inc., *The Potential for Industrial Cogeneration Development by 1990*

(Cambridge, Mass.: Resource Planning Associates, 1981).
24. Resource Planning Associates, Inc., *The Potential for Cogeneration Development in Six Major Industries by 7985* (Cambridge, Mass.: Resource Planning Associates, Inc., December 1977).
25. Rosenthal, Arnold, Consolidated Edison Co. of New York, private communication to OTA.
26. Schlesinger, Ben, American Gas Association, private communication to OTA.
27. Solar Energy Research Institute, *A New Prosperity* (Andover, Mass.: Brick House Publishing Co., Inc., 1981).
28. SRI International, et al., *Draft Environment/ Impact Statement, Small Power Production and Cogeneration Facilities–Qualifying Status/Rates and Exemptions* (Washington, D. C.: U.S. Government Printing Office, FERC/EIS-0019/D, June 1980).
29. Synergic Resources Corp., *Industrial Cogeneration Case Studies* (Palo Alto, Calif,: Electric Power Research Institute, EPRI EM-1531, 1980).
30 Thermo Electron Corp., *A Study of Inplant Electric Power Generation in the Chemical Petroleum Refining and Paper and Pulp Industries* (Waltham, Mass.: Thermo Electron Corp., TE5429-97-76, 1976).
31 U.S. Department of Energy, *Month/y Energy Review* (Washington, D. C.: U.S. Government Printing Office, February 1982).
32 Williams, R. O., and Lang, R. C., "Fuel From Waste Products," *Food Engineering* October 1979.
33. Williams, Robert H., "Industrial Cogeneration," 3 *Annual Review of Energy* 313-356 (Palo Alto, Calif.: Annual Reviews, Inc., 1978).
34. Williams, Robert H., Princeton University, private communication to OTA, February 1982.
35. Williams, Robert H., Princeton University, "Biomass Cogeneration as a Major Option in the Swedish Context, " draft report, October 1982.

98-946 O - 83 - 15 : QL 3

Chapter 6
Impacts of Cogeneration

Contents

Page

Environmental Effects of Cogeneration 221
Characteristics of Cogeneration Systems and Their Effects on Air Quality 221
Emissions Balances: Cogeneration v. Separate Heat and Electricity. 229
An Air Quality Analysis of Urban Diesel Cogeneration. 231
Emission Controls. 233
Health Effects From Cogenerator Emissions. 236
Effects of Some Cogeneration Technology/ Fuel Options 238
Policy Options: Removing Environment-Associated Regulatory Impediments 239
Other Potential Impacts. 241

Potential Regulatory Burden on Environmental Agencies 242
Environmental Permitting and Enforcement Agencies 242
Potential Impacts on Agency Caseloads. . . . 244
Summary. 246

Economic and Sociall Implications 246
Economic Impacts 247
Utility Planning and Regulation ., ...*.* 254
Other Economic and Social Impacts 257
Centralization and Decentralization of Electricity Generation 259

Chapter 6 References 263

Tables

Table No. *Page*

48. Effect of Cogeneration Characteristics on Air Quality. 222
49. Uncontrolled Emissions of Competing Combustion Technologies Using the Same Fuel, in Pounds/MMBtu Fuel Input . 223
50. Maximum Size Cogenerator Not Requiring New Source Review 226
51. Selected Emissions Balances for Cogeneration Displacing Central Power Plus Local Heat Sources. 231

Page

52. Summary of NO_x Emission Control Techniques for Reciprocating IC Engines . 234
53. NO_x Control Techniques that Achieve Specific Levels of NO_x Reduction 235
54. Costs of Alternative NO_x Controls for Diesel Cogenerators 235
55. Emissions From Oil- and Coal-Fired Diesels 238
56. Approximate Costs of procedures Required Under the Clean Air Act 240
57. Penetration Scenario for Cogeneration in California and Colorado 244
58. Increase in Agency Workloads Due to the Deployment of Cogeneration Technologies in Colorado. 245
59. Increase in Agency Workloads Due to the Deployment of Cogeneration Technologies in California 246
.60. Market Penetration Estimates for Cogeneration 248
61. Scenarios for Cogeneration Implementation 249
62 Assumptions Used to Compare Capita! Costs 250
63 Comparison of Capital Requirements 251
64 Assumptions Used in Estimating Operating and Maintenance Costs. 251
65. Comparison of Operating and Maintenance Costs 252
66. Comparison of Construction Labor Requirements. 253
67. Craft Requirements for Central Station Powerplant Construction 254
68. Estimated Operating and Maintenance Labor 254
69. Pacific Gas & Electric Cost Structure Adjusted for PURPA, 1990 256

Figures

Figure No. *Page*

61. CWE Fixed Cost Structure as a Function of Sales Growth. 256

Chapter 6
Impacts of Cogeneration

ENVIRONMENTAL EFFECTS OF COGENERATION

The major environmental issue that has arisen from the promotion and deployment of cogeneration technologies concerns whether the widespread use of cogeneration may lead either to improved or degraded air quality. This issue is especially critical in urban areas, where air quality may not be in compliance with national ambient standards or where the allowable margin for additional emissions may be small. A corollary issue, also critical for urban areas, concerns the relative value of promoting cogeneration by easing environmental standards. Examples of suggested regulatory changes designed to favor cogeneration include basing emission standards on energy output rather than (currently used) fuel input, * and awarding emissions "offsets"** created by the cogenerator's substitution of cogenerated electric power for utility-generated electric power. Clearly, the issues are interconnected, because cogeneration's effect on air quality will provide a powerful argument for or against any changes in environmental standards.

This analysis of the environmental effects of cogeneration focuses on these air quality issues, with a final section devoted to other potential impacts (such as noise). First, cogeneration is characterized according to a list of attributes that affect air quality. These attributes are then discussed qualitatively and, to the extent possible, quantitatively. Next, a series of cogeneration applications are evaluated to determine their "emissions balances:" the net emissions increases or decreases in the total system (the utility grid plus local heat and electricity sources), and the net changes at the cogenerator site. Then, an evaluation of an existing air quality study of cogeneration is presented, followed by discussions of emission controls and the health effects of exposure to the major pollutants emitted by cogenerators. The air quality evaluation concludes with a discussion of the potential air quality concerns associated with advanced cogeneration technologies and an analysis of some suggested policy options for promoting cogeneration by easing environmental regulations. The chapter ends with a discussion of other potential impacts of cogeneration, including water discharges, solid waste disposal, noise, and cooling tower drift.

***Because a cogenerator produces more usable energy per unit of fuel consumed than a similarly sized electric generator using the same technology, an output-based standard would allow the cogenerator to emit more pollutants per unit of fuel consumed and thus incur lower pollution control costs.**

****New sources attempting to locate in an area that has not attained Federal ambient standards must obtain pollution "offsets" (i.e., reduced emissions), from existing sources in the area so as not to increase total emissions.**

Characteristics of Cogeneration Systems and Their Effects on Air Quality

The deployment of cogeneration systems may involve a number of changes in the physical characteristics of electricity generation and (useful) heat or steam production. These physical changes may, in turn, alter the magnitude and dispersion characteristics of emissions from these activities. The result will be a change in air quality.

At a minimum, cogeneration will **increase fuel efficiency** by replacing separate devices producing either electricity or thermal energy with a single device providing both. Thus, less fuel would have to be burned to produce the same energy. Cogeneration may involve merely the addition of waste heat capturing equipment to existing electric generators, or the addition of turbines to existing steam producers; in this case, cogeneration **technology is different** from only one of the separate technologies. However, many cogeneration systems use technologies different from both the separate electricity generator and heat or steam producer. Cogeneration systems generally are **different in scale** from separate electricity and thermal energy systems; for virtually all applications except simple additions of waste heat recovery equipment, they are smaller in scale than the central electricity generating systems they substitute for, and in many applications they are larger in scale than the thermal energy systems. Cogeneration systems often ***use***

a **different fuel** from either or both systems they replace, and often they have a **different location–usually closer to the electricity demand source, at times slightly farther away from the thermal demand sources.**

Table 48 summarizes the separate impact on air quality of each of these cogeneration characteristics, assuming all other factors remain the same. For example, a reduction in fuel burned will lead to decreased emissions and improved air quality if everything else remains the same. Usually, however, lots of things have changed. For example, the substitution of several small cogenerators for a central power station may imply:

- fewer controls, because most regulations increase in stringency as size increases;
- lower stacks, which have greater impacts on ground level air quality per ***unit of emission;***
- dispersal of powerplant emissions sources–i.e., more sources with lower emissions from each separate source;
- different technology-e. g., diesels instead of fossil boilers and gas-fired furnaces;
- use of a different fuel—e.g., diesel fuel used instead of coal and natural gas.

The complex mixture of effects in this example and in table 48 implies that cogeneration **as a general concept** cannot be characterized easily as environmentally beneficial or adverse. A more detailed exploration of cogenerator characteristics is necessary in order to identify those circumstances where the environmental value of cogeneration can be defined less ambiguously.

Increase in Fuel Efficiency

As noted above, all near-term cogeneration applications involve the use of a fuel burning technology that produces **both** electricity and thermal energy, and that substitutes for a separate electric generator and thermal system. Although most applications involve a change in the scale of electricity generation (from central station to inplant generation) and many involve a basic technology change as well (e.g., steam turbines to diesels), combining the production of both electric and thermal energy in one unit creates a substantial energy savings **by itself.** For example, using a diesel cogenerator in place of a diesel electric generator and an oil-fired furnace can reduce total fuel use by at least 25 percent if three-quarters of the potentially usable heat can

Table 48.–Effect of Cogeneration Characteristics on Air Quality

Technological characteristic	Direct physical effect	Effect on air quality (positive or negative)
1. Increased efficiency	Reduction in fuel burned	Positive
2. Change in scale (usually smaller for electric generation, at times larger for heat/steam production)	Change in pollution control requirements (stringency increases with scale)	Negative for electric[a] Positive for heat
	Change in stack height and plume rise (increases with scale)	Negative for electric Positive for heat
	Changes in design, combustion control	Mixed
3. Changes in fuel combustion technology	Changes in emissions production, required controls, types of pollutants, physical exhaust parameters	Mixed
4. Change of fuels	Change in emissions production, type of pollutants	Mixed
5. Change of location (most often for electric generation)	Change in emissions density and distribution—electric power more distributed, heat/steam may become more centralized	Mixed

aThe air quallty effect of replacing the electric power component of the conventional system with the electric component of the cogeneratlon ayetem is negative.

SOURCE: Offlce of Technology Assessment.

be recovered* (11). Similar savings can be achieved by using a gas turbine cogenerator in place of a gas turbine electric generator and a separate furnace. Substitution of a steam electric cogenerator for a steam electric generator and separate low-pressure steam boiler can reduce fuel use by 15 percent (42).

Such substitutions may lead to substantial reductions in total emissions because they eliminate emissions from the heat source. For example, a diesel cogenerator could reduce sulfur oxide (SO_x) emissions by about 0.1 lb for every 100 kilowatthours (kWh) of electricity it generated, by displacing oil heat using 0.2 percent sulfur distillate oil. Similarly, a gas turbine cogenerator could reduce nitrogen oxide (NO_x) emissions from a displaced oil-fired industrial boiler by **0.3** lb/loo kWh (see app. B for emissions information). In some cases, however, fuel used–and thus emissions generated—by the cogenerator to produce thermal energy and electricity may be greater than for electricity generation alone, and theoretically total emissions could **increase** if the separate thermal system that is displaced were a particularly clean one. A coal or residual oil-fired steam turbine that was used for both electricity and space or process heat, for example, would add to total SO_x emissions if it replaced a similarly fueled electric generator and a separate heat system that used gas or low sulfur distillate oil.

Aside from any benefits attained by reducing emissions at the fuel combustion source, the cogenerator should be credited with environmental benefits from the remainder of the fuel cycle—i.e., the benefits of extracting, refining, and transporting less fuel. For example, reducing the use of oil for heating is most likely to reduce the impacts of importing and refining crude oil and transporting the refined product from refinery to market area. These impacts include spills of the crude and refined product and a number of pollution problems generally associated with refineries. These benefits must be balanced by any negative effects related to increased fuel transportation requirements for multiple cogeneration units.

● **The reduction is 27 percent assuming a heat rate for the diesel of 10,700 Btu/kWh, potentially recoverable heat of 4,300 Btu/kWh, furnace efficiency of 80 percent.**

Quantification of these costs and benefits is not attempted in this report, but it is important not to forget that they exist. In fact, as the more accessible fuel reserves become exhausted and extraction becomes more difficult and potentially more damaging, the magnitude of the potential benefits will grow.

Different Technology and Fuel

Although the alternative to a cogeneration system can be the identical electricity generating technology (without heat recovery) with a separate thermal energy source (boiler or furnace), often a cogeneration system replaces a completely **different** (usually large-scale centralized) electric generation technology. A common example is a cogenerator with diesel or gas turbine technology being used in place of electricity supplied by a central oil- or coal-fired steam or nuclear steam generating plant. Also, the smaller cogeneration systems typically use cleaner fuels (distillate oil or natural gas) than central station fossil plants (coal or residual oil). The technological and fuel differences both create sharp differences in emissions rates.

Table 49 displays typical levels of uncontrolled emissions from the three major competing cogeneration technologies; the steam turbine also represents the technology used in most central station powerplants. Although the same fuel is assumed, there are substantial differences in NO_x and carbon monoxide (CO) emissions, and small differences in particulate and hydrocarbon emissions. The magnitude of uncontrolled SO_x emissions is not technology-dependent because essentially 100 percent of the sulfur in the fuel is converted to SO_x regardless of the technology.

Table 49.—Uncontrolled Emissions of Competing Combustion Technologies Using the Same Fuei, in Pounds/MMBtu Fuei input (using 0.2% sulfur distillate oil

	NO_x	Particuiates	CO	HC	SO_x
Low-speed diesei[a]	3.48	0.07	0.91	0.10	0.20
Gas turblne[b]	0.90		0.02	0.04	0.20
Steam turbine[c]	0.16	0.01	0.04	0.01	0.20

aBased on sales-weighted averages for large-bore diesels, in Environmental protection Agency (39).
bBased on Environmental Protection Agency (40) and particulate emissions data from a GE 7821B combustion turbine.
cBased on Environmental Protectlon Agency (38).

SOURCE: Office of Technology Assessment.

A shift from central station electricity to diesel or gas turbine generation generally will be accompanied by a substantial increase in NO_x emissions. CO emissions also will increase significantly with diesel generation. As discussed later, however, significant differences in efficiencies and emission rates among diesels and gas turbines of different sizes, configurations, and manufacturers make it imperative that **considerable caution be used in applying "average" emission factors and efficiencies to analyses of cogeneration impacts.**

Aside from their relatively high levels of NO_x and CO emissions compared to alternative combustion technologies, diesel cogenerators face the additional problem of producing particulate emissions that appear to have a **possibility** of causing adverse health effects because of their chemical makeup. The potential effects of these particulate are discussed below in the section on health effects.

Diesel and gas turbine cogenerators must use cleaner fuels (primarily distillate oil or natural gas) than those burned in fossil-fueled powerplants (generally coal or residual oil), yielding emission benefits to the cogenerators. * Natural gas, for example, contains virtually no sulfur, and distillate oil may contain only 0.1 or 0.2 percent sulfur compared with more typical 1 percent sulfur residual oil and 1 to 5 percent sulfur coal; SO_x emissions are roughly proportional to these percentages. Although scrubbers will be used on newer utility powerplants, substantial differences among technologies in expected SO_x emissions will remain.

Fuel choice is also important for particulate and NO_x emissions, even though widely required particulate controls may eliminate some of the differences for particulate. The differences in uncontrolled industrial steam turbine NO_x emissions for coal, oil, and natural gas are displayed below:

NO, emissions (lb/MMBtu) (38):*	
Coal (bituminous)	0.60
Oil (residual)	0.40
Gas	0.17

Because some large diesels (e.g., those in marine applications) use residual oil, and others are being developed that can use coal as well, some of these "clean fuel benefits" may disappear in the future as cogenerators begin to use the same types of fuels as the powerplants they displace.

Finally, fuel choice dictates the costs and benefits associated with eliminating the environmental effects of exploring for, extracting, refining and transporting the fuel used in the (displaced) conventional system, and adding these effects for the cogenerator fuel. Although many cogeneration systems use natural gas and oil, which may have fewer than or the same noncombustion environmental costs **per unit of energy** as fuels used in central station powerplants, cogeneration systems based on steam turbines may use coal and displace oil and natural gas. In these cases, cogeneration's net environmental benefit associated with the noncombustion portion of the fuel cycle may be negative even though total energy usage has decreased, because of the relatively greater adverse impacts of coal mining and transportation.

Change in Location and Scale

Even when fuel type, technology type, and efficiency are not considered, the substitution of several smaller energy producers for one or a few large producers can have substantial air quality impacts. Control requirements will vary with the size of the equipment, resulting in changes in total emissions, while the substitution of several more widely distributed, smaller smokestacks for a few large ones will change the dispersion of those emissions. Poor enforcement of control compliance for the dispersed system (due to the multiplicity of sources and the limited local en-

***However, if use of these fuels were supply limited, then their use by cogenerators would have to be balanced by the withdrawal of supply from an alternative combustion source. At the moment there is no such limitation.**

***Large commercial and general industrial boilers (10 to 100 MMBtu/hr), bituminous coal heat content 25 MMBtu/ton.**

forcement capabilities of regulatory agencies) also may affect air quality. Of course, to the extent that the cogenerators may represent a centralization of heat production (e.g., in a total energy system for an apartment complex that replaces multiple small heating units), these effects may be reversed.

In general, control requirements for energy production technology become more stringent as size increases. Many cogenerators will be controlled less stringently than utility generators using the same combustion technologies, but controlled more strictly than small heating systems. Examples of the effect of size on control requirements for each cogenerator technology are:

New **steam generators and steam turbines** must comply with Federal New Source Performance Standards (NSPS) only if they are larger than 250 million Btu per hour (MMBtu/hr) fuel input (45). * Smaller units are subject only to local and State rules, some of which may not be so stringent. Furthermore, generators larger than this cutoff are subject to different emission limits depending on whether or not they are utility-operated. New utility-operated steam generators must achieve 90 percent SO_x control for oil and for medium to high sulfur coal, and **70** percent for low sulfur coal, with an upper limit of 1.2 lb/MMBtu input. In addition, they are restricted to 0.03 lb of particulate per million Btu input. in contrast, new large steam generators used as industrial cogenerators need achieve only 1.2 lb of SO_x per million Btu input and 0.10 lb of particulate per million Btu input.

New **gas turbines** with fuel rates greater than about 100 MMBtu/hr must achieve 75 ppm NO_x (about 70-percent reduction from uncontrolled levels) under Federal NSPS, whereas turbines in the 10 to 100 MMBtu/hr range need reach only 1 **so** ppm (40-percent reduction) (46). The iatter standard does not go into effect until about 1983. Gas turbines smaller than 10 MMBtu/hr are subject only to State and local regulations (if any), although gas turbines in this size range currently do not appear to be a likely technological choice for cogeneration applications.

***Equivalent to about 200,000 lb of steam per hour or 25 MW of electrical capacity.**

Thus, it appears that new gas turbine cogenerators will have either emission standards equal to those of large utility gas turbines or, for the smaller units, half as stringent. Future improvements in the efficiency and economics of very small gas turbines conceivably might lead, however, to turbine cogenerators below the NSPS cutoff and thus only subject to local emission standards.

Stationary diesels currently are not regulated at the Federal level. The Environmental Protection Agency (EPA) has proposed new source performance standards for stationary diesels above 560 cubic inch displacement per cylinder, which essentially includes most low- and medium-speed diesels (less than 1,000 rpm) (39). In the absence of the NSPS, it appears likely that most cogenerators would fall in this size range. However, it is unclear whether the incentive of potential escape from controls might lead, upon the promulgation of a Federal emission standard, to deployment of smaller displacement diesel cogenerators. In fact, incentives to purchase such smaller displacement diesels may precede a Federal standard; at least one EPA regional office is reported to be requiring control to the proposed NSPS level even without the benefit of a formal standard (8).

Small cogenerators could escape the effect of additional emission limitations (beyond the Federal NSPS) in nonattainment and prevention of significant deterioration (PSD) areas (see ch. 3). These limitations are triggered by annual emissions of either 100 tons per year (tpy) (steam turbine) or 250 tpy (diesel and gas turbine) of any criteria* pollutant (44). For example, a 1-MW diesel achieving the proposed NSPS NO_x level (600 ppm or **about 2.20 lb/MMBtu) (2,39) would emit a maximum of 96 tpy of NO_x even if it ran continuously at full load. Thus, it could avoid the nonattainment or** PSD requirements, whereas a large utility plant could not.

Table 50 indicates the size limit necessary to avoid a nonattainment or PSD review (i.e., to emit

***A "criteria" pollutant is one that is regulated under the Clean Air Act by a National Ambient Air Quality Standard. Current criteria pollutants are sulfur oxides, particulate matter, nitrogen dioxide, hydrocarbons, photochemical oxidants, carbon monoxide, and lead.**

Table W.—Maximum Size Cogenerator Not Requiring New Source Review

Technoloav	Megawatts	
Dlesels	300/0 efficient	
NO, limit:		
Oil-fired uncontrolled . .	1.5	
Dual-fuel uncontrolled .	2.2	
Proposed NSPS	2.5	
Gas *turbines*	*30°A* efficient	200/0 efficient
NO_x limit, assuming NSPS	17.0	11.5
SO_x limit:		
1.O% sulfur oil	5.0	7.5
0.30% sulfur oil	16.5	10.8
0.20% sulfur oil	24.8	16.3
Steam turbines	150/0 efficient	100/0 efficient
NO_x limit:		
Coal-fired	7.9	5.6
Oil-fired	3.4	2.4
Gas-fired	2.2	1.6
SO_x limit:		
0.2% sulfur oil	5.0	3.3
1.0% sulfur oil	1.0	0.7

aPlant electrical efficiency, Btu (electrlcity) 100/Btu (Input fuei).

SOURCE: Office of Technology Assessment.

less than 100 or **250** tpy of a criteria pollutant) for a cogenerator operating at 100 percent load. Under existing regulations, cogenerators larger than this size also could avoid review by applying sufficient controls to reduce their emissions to just below the limit.

The change in scale and location associated with cogeneration replacing conventional energy systems can have a substantial effect on the dispersion characteristics of the emissions. In some circumstances, this change in dispersion will influence ambient air quality more strongly than the changes in the amount of emissions. The air quality changes, however, will depend on a variety of factors including meteorological conditions, effective stack heights, terrain, and location of the emissions sources. This large number of physical factors, coupled with a wide range of technology choices, makes air quality modeling of an appropriate range of cogeneration and conventional systems expensive, and it was not attempted. However, by relying on existing studies and diffusion theory, some of the qualitative differences between alternative electric and thermal energy production systems can be described.

Although both a cogeneration-based system and a conventional system consist of combinations of centralized and dispersed sources (the cogeneration system usually requires central station backup), a good part of the air quality differences between the two systems can be understood by comparing the pollution effects of centralized emission sources with tall stacks to the effects of multiple dispersed sources with shorter stacks. This is because cogeneration installations often are added to a large existing (conventional) system (i.e., a utility grid and a series of localized heat sources) and in many cases simultaneously increase the emissions from dispersed sources* and decrease the centralized emissions. The air quality tradeoff between dispersed and centralized sources thus is an important determinant of whether adding cogeneration is environmentally preferable to maintaining the conventional system.

The air quality tradeoff between central and dispersed sources–between a few sources with tall smokestacks and multiple sources with relatively short stacks—is difficult to evaluate because the tradeoff changes with local conditions. Some of the general features of the tradeoff can be described, however, by looking at a simplified example and then showing the effects of varying conditions, one at a time.

The simplified example considers a very large area with a relatively flat terrain. The centralized system is represented by a few large emission sources with tall stacks—on the order of several hundred feet in height. The dispersed system is represented by many smaller sources with short stacks scattered relatively uniformly throughout the area. The total emissions from each system are assumed to be equal.

As long as the area in question is very large and the air quality is averaged over a long period—a year, for example–striking differences in air quality between the two systems usually will not be seen. * The few tall stacks achieve a relatively uniform dispersion of pollution because of their superior diffusion characteristics; the more numerous shorter stacks achieve a somewhat sim-

● There are important exceptions to this, e.g., when the heat source that is substituted for is more polluting than the cogenerator, or when the cogenerator is replacing multiple small heat sources.

*in some situations, when there are strong differences in the prevailing winds at the different heights, strong differences may occur.

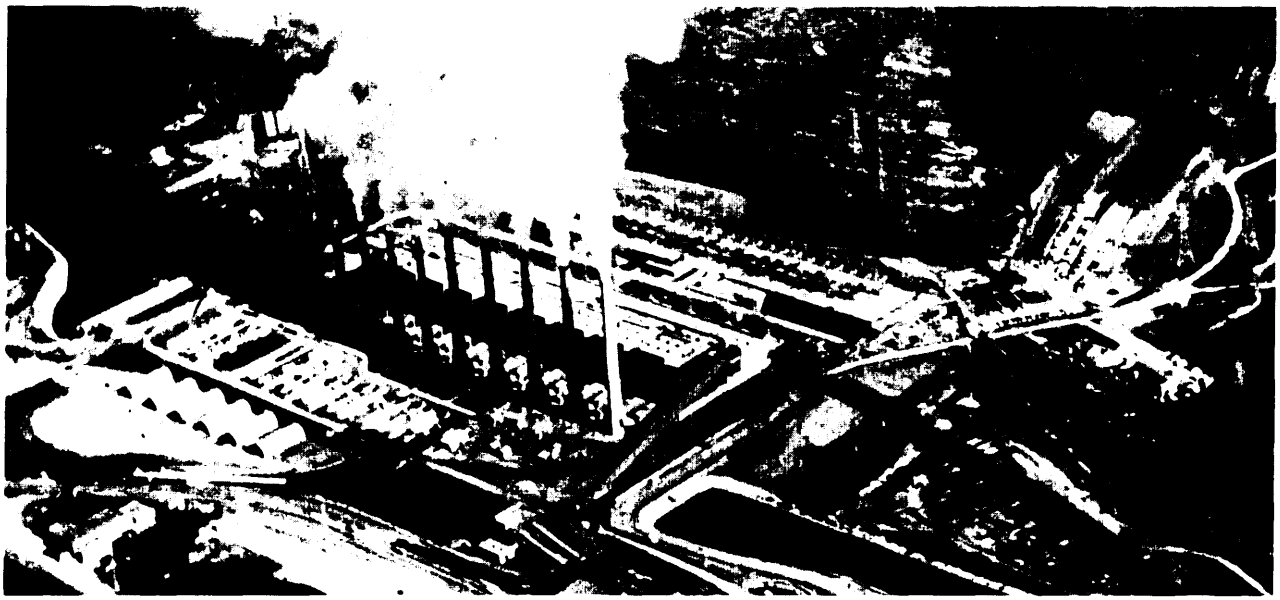

Photo credit: Environmental Protection Agency



Photo credit Department of Housing and Urban Development

The substitution of multiple small cogenerators in urban areas in place of centrally located powerplants involves shifts in location, stack height, magnitude, and type of air emissions and can have significant impacts on air quality

ilar effect (albeit with many small peaks and valleys in pollutant concentration levels) because they are spread out.

The actual characteristics of the choice facing a decision maker usually are quite different from this idealized case. Often, the short stacks—the cogenerators—are clustered within a relatively small area rather than being widely scattered. Short-term meteorological conditions may disrupt the smooth dispersion of pollutants from tall and short stacks in drastically different ways. When the cogenerators are located in urban areas, their proximity to other buildings may affect emissions dispersion. And sometimes the tall stacks–the central power stations—are located in a different area from the cogenerators. Each of these conditions affects air quality and must be considered in examining the tradeoff between cogenerators and conventional central utility systems.

Clustering of the small sources within an urban area makes the dispersion characteristics of a tall stack in the same area superior to those of the small stacks. This is because the effective area of dispersion of a tall stack is very large, whereas the clustering of small sources has defeated their potential for geographically based dispersion. Thus, a series of emission sources with relatively short stacks—such as cogenerators—located in a relatively small area will have a considerably greater impact on local (average annual) air quality than a single source with a tall stack located in the same area.

However, if the tall stack is located some distance from the cluster of short stacks, the air quality of areas at a distance from the cluster of small sources may show some improvement as a result of reducing emissions from the tall stack. In situations where the problems associated with long-distance transport of air pollution (e.g., acid rain) are considered to be more important than existing local air pollution problems, a switch to short stacks may be viewed as beneficial to overall air quality.

Short-term meteorological conditions may substantially change dispersion characteristics and alter the air quality tradeoffs between short and tall stacks. Under inversion conditions, when high levels of pollutant concentrations can result from sources under the inversion layer, the buoyant plume from a tall stack may be able to punch through the inversion layer and, consequently, have minimal impact on local air quality. Emissions from lower stacks, on the other hand, are trapped beneath the layer and are poorly dispersed. During other conditions, plumes from either tall or short stacks may be forced to ground level ("fumigation"). Under fumigating conditions, the concentration peaks from the few large sources with tall stacks can be considerably larger than the concentrations possible with a series of dispersed, smaller sources with low stacks. Fumigation conditions include the breakup of a night-time inversion, certain kinds of shoreline wind conditions, and thermal instability causing looping plumes. Mountainous terrain can also cause powerplant plumes to touch down. Other conditions, such as the trapping of emissions beneath elevated inversions, may also diminish the dispersion advantages of tall stacks.

Careful siting of cogenerators can be critical in urban situations because the unique terrain conditions can adversely affect dispersion of emissions. Plumes from cogenerator stacks may be caught in aerodynamic downwashes caused by the action of wind around neighboring buildings (or, in some cases, around the stack itself) and cause high pollutant concentrations in the immediate area of the stack. In addition, the plume may impinge on surrounding buildings, especially if they are taller than the stack or fairly close to it.

Pollutant concentrations caused by this "urban meteorology" may be much higher—perhaps by an order of magnitude or more—than predicted by models assuming unobstructed dispersion. For example, a calculation of the effect of downwash caused by airflow around a small building housing a diesel cogenerator showed an increase in maximum ground level concentrations of NO_x from 400 micrograms per cubic meter (ug/m3) (no downwash, 10 m stack) to 6,000 ug/m3 (downwash) (5). Concentrations may be still higher on the faces and roofs of surrounding buildings. Because roof areas may be used as recreation areas or for fresh-air intake, and building faces may have open windows, downwash problems must be taken extremely seriously.

Aerodynamic problems from the cogenerator's building or from surrounding buildings of similar height can be eliminated by the simple expedient of increasing the stack height. Unless surrounding buildings are close and their height is considerably taller than the stack, the stack height levels needed either to avoid any effects or to avoid the worst downwash effects usually are not so high as to render the system infeasible. For example, for a 7 m high building with no problems from surrounding buildings, stack heights that avoid all building interaction effects are on the order of 10 to 14 m above the roofline if the building is of moderate horizontal dimensions. A 6 m stack might be tall enough to avoid the worst downwash effects (5). The presence of nearby buildings of similar height adds to the downwash problem, but the additional stack height necessary to avoid problems is not great; for 9 m high buildings, only 3 m would have to be added to the stack (5). If the surrounding buildings are much taller than the cogenerator's building and closer than about three times their height, however, then the cogenerator can only free itself of their adverse aerodynamic influence by raising its stack above their height (5). The economic and esthetic effects of this requirement will be quite high in some cases.

Finally, in cases where an area's electricity is imported from distant powerplants, the tradeoff between short stack cogenerators and central powerplants with tall stacks is complicated: the emissions from each alternative affect different areas that may have different meteorological conditions, background air quality, and other factors that determine pollution impacts. Also, because a utility often can choose among a variety of supply alternatives, including different types of powerplants within its airshed (possibly using different fuels or maintaining different levels of pollution control) and long-distance power imports, the air quality tradeoff becomes still more complex and is difficult to evaluate properly.

One factor in this tradeoff is fairly consistent, however. New powerplants generally are located far from densely populated urban areas, whereas cogenerators serving urban areas are located there. Thus, peak pollutant concentrations caused by short-term unfavorable meteorological conditions generally fall outside of the urban areas for powerplants and inside these areas for cogenerators. Consequently, the actual population exposure due to the cogenerators may be higher than the exposure caused by the powerplant even during conditions when the cogenerator-related concentrations are much lower than the concentrations associated with the powerplant. These differences may have important implications for the health effects of alternative centralized and decentralized systems, although there are other effects (such as ecological damage) for which the above differences are either unimportant or imply higher costs from the powerplants.

Emissions Balances: Cogeneration v. Separate Heat and Electricity

Computing the air quality effects of any technological change is always made difficult by the complexity, expense, and inaccuracy of air quality modeling. In the case of cogeneration, this computation is further complicated by difficulties in determining the emissions changes occurring in the central utility system and by substantial variability in the emissions factors to be applied to the cogenerators.

The response of the utility system to an increase in cogenerated power—a critical parameter in determining not only emissions impact but also oil savings (or loss)—is difficult to predict. The addition of significant levels of cogenerated power to a utility's service area will affect both its current operations and future expansion. If the cogenerated power represents a displacement of current electricity demand in the service area (i.e., with retrofit of an existing facility for cogeneration), the utility will either reduce its own electricity production or reduce power imports, with its decision based on costs, contractual obligations or, perhaps, politics. It may also move up the retirement date for an older powerplant or cancel planned capacity additions in response to cogenerators' displacement of either current or anticipated future demand. Because most uti{ity grids draw on a mix of nuclear-, coal-, and oil-fired steam electric generators for base and intermediate loads, and oil- or natural gas-fired tur-

bines for peaking capacity (as well as hydroelectric and natural gas-fired steam electric plants in some parts of the country); because these plants may be scattered over a wide area; and because control systems for the fossil plants may vary drastically in effectiveness, the pollution implications of the response of the utility system to cogeneration are highly variable.

Aside from problems in computing the utility system impacts, a variety of factors create analytical difficulties in calculating the emissions likely to be produced by a cogenerator. For example, the potential variability in organic nitrogen and sulfur content of future fuel supplies for gas and steam turbines and diesels may have substantial impacts on the level of NO_x and SO_x emissions unless appropriate controls are applied to compensate for fuel quality. Differences in the specific design and duty cycle of cogenerators also may create substantial variability in emissions from engines of the same size and technology. CO and unburned hydrocarbon emissions from diesels depend on injection pressure (range: several hundred to 20,000 psi, though not for the same size engine), engine speeds, use of a precombustion chamber, and other factors. NO_x emissions depend on combustion and postcombustion temperatures, which can vary substantially in diesels and gas turbines. Emissions of all three of the above pollutants depend on load, which can vary from application to application. Data from EPA and other sources show that uncontrolled diesel hydrocarbon emissions can va~ by a factor of 29 (0.1 to 2.9 grams/horsepower/hour (g/hph)), CO emissions by a factor of 49 (0.3 to 14.6 g/hph), and NO_x emissions by a factor of eight (2.1 to 17.1 g/hph) (39). Although controls required by uniform emission standards should reduce this variability, it is likely that even controlled emission rates will vary substantially from one installation to another, because controls are unlikely to be "fine-tuned" to account for variations in fuels and operating procedures, and because different manufacturers will choose different margins of safety and control techniques to ensure compliance.

OTA calculated the emissions impact–both at the cogenerator site and over a larger area encompassing the cogenerator site and the entire utility grid—for a variety of situations where a cogenerator replaces or substitutes for a more conventional electricity and heat supply option (e.g., central station power plus onsite boiler). The results are shown in table 51. The substantial number of combinations of: 1) **cogenerator type and fuel, 2) central power station type and fuel,** and 3) **local heating type and fuel** that are analyzed, and the normalization of the calculations to 100 kWh of electricity generation are designed to compensate in part for the site-specific variability of cogeneration installations discussed above. Emissions data for each of the separate modules are given in appendix B, and these data may be readily used to compute additional combinations. Unfortunately, the variability in emissions factors caused by design and operating variations is not accounted for in table 51.

A key conclusion that can be drawn from table 51 is that substituting cogeneration for more conventional systems will not result in automatic pollution gains or losses despite the increased efficiency. If the variability not accounted for in the table is further considered (e.g., alternative fuel compositions, or the considerable range of emissions factors possible within a cogenerator technology type), the potential for achieving a wide range of positive and negative emissions effects by varying the precise cogeneration system design becomes even more readily apparent.

Diesel cogeneration may be an important exception to this conclusion. Diesel cogenerators will tend to cause a strong increase in NO_x both at the cogeneration site and in the overall regional balance (utility plant reduction included), mainly because diesels are very high emitters of NO_x. Although CO emissions increase by about the same order of magnitude as NO_x, the CO increases are far less significant because the toxic effects of NO_x occur at concentrations that are at least 10 times lower than the levels at which CO becomes toxic.

The actual effect of diesel cogenerators on emissions and air quality will depend on the degree of attention paid to environmental control. If minimum NO_x emissions were judged to be of critical importance in a series of cogeneration installations in an area, appropriate selection

Table 51.—Selected Emissions Balances for Cogeneration Displacing Centrai Power Pius Locai Heat Sources[a] (normalized to 100 kWh)

Cogenerator Replaces	Central power Plus	Heat	Net emissions (lb) NO_x	Partlculates	CO	HC	SO_x	Net emissions at cogeneratlon site (lb) NO_x	Partlculates	CO	HC	SO_x
Diesel (011)	New coal plant	Domestic gas	+2.84	+0.04	+0.65	+0.09	−1.12	+3.39	+0.07	+0.90	+0.10	+0.20
	Older oil-fired plant	Domestic oil	+2.69	−0.01	+0.88	+0.08	−0.93	+3.37	+0.06	+0.89	+0.10	+0.12
	Existing gas turbine (oil) peaking unit	Domestic 0il	+2.36	+0.02	+0.77	+0.06	+0.09	+3.37	+0.06	+0.89	+0.10	+0.12
		Note: Proposed diesel NSPS subtracts 1.2 lb NO_x/100 kllowatthours										
Diesel (90 percent gas, 10 percent oil)	Any combinations		Slgnlflcant changes from above: 1) 0.77 lb/100 kWh more HC 2) 0.94 lb/1OO kWh leas NO_x									
Gas turbine (NSPS) (gas)	Older coal-fired plant	Domestic oil	−0.39	−0.29	+0.09	+0.03	−4.52	+0.30	+0.02	+0.13	+0.04	−0.14
		011-fired Industrial boiler	−0.80	−0.40	+0.09	+0.03	−5.17	+0.09	−0.09	+0.13	+0.04	−0.79
	Older oil-fired plant	Coal-fired Industrial boiler	−0.84	−0.40	+0.05	+0.01	-3.27	-0.04	-0.35	+0.09	+0.02	−2.18
	New coal plant	Gas-fired Industrial boiler	−0.28	−0.01	+0.10	+0.04	−1.31	+0.27	+0.02	+0.14	+0.05	+0.01
		Note: Removing gas turbine NSPS adds 0.4 lb NOx/lOO kilowatthours										
Gas turbine (NSPS) (oil)	Older oil-fired plant	Oil-fired Industrlal boiler	−0.61	−0.09	−0.03	+0.03	−1.65	+0.09	−0.04	+0.01	+0.04	−0.60
	Older natural gas-fired plant	Gas-fired Industrial boiler	−0.40	+0.06	o	+0.01	+0.20	+0.27	+0.07	+0.02	+0.05	+0.20
		Note: removing gas turbine NSPS adds 0.8 lb NO_x/100 kllowatthours										
Steam turbine, coal fired	Older oll-flred plant	NSPS steam boiler, coal	−0.38	−0.01	−0.02	o	−0.49	+0.32	+0.04	+0.02	+0.01	+0.56
	Older natural gas-fired plant	NSPS steam boiler, coal	−0.35	+0.03	o	−0.03	+0.56	+0.32	+0.04	+0.02	+0.01	+0.56
	Nuclear plant	NSPS steam boiler, coal	+0.32	+0.04	+0.02	+0.01	+0.56	+0.32	+0.04	+0.02	+0.01	+0.56
	Older oil-fired plant	Oil-fired Industrial boiler	+0.38	−0.13	o	0	-0.11	+1.08	-0.06	+0.04	+0.01	+0.94
		Older oll-fired boiler[c]	−0.37	+0.12	−0.02	−0.01	−0.12	+0.33	+0.17	+0.02	o	+0.94

aSee app. A for assumptions on controls and emlsslons rates.
b This might represent replacing a number of oil-fired process heat boilers In an Industrial park with a single coal-fired cogenerator.
cEssentially Identical in (emissions per million Btu) with the older Oil-fired PowerPlant.

SOURCE: Office of Technology Assessment.

of diesel designs and use of controls could lower emissions from the level shown in table 51.

Gas turbine cogenerators do not appear to cause consistently strong changes in emissions either locally or regionally, except for: 1) regional SO_x reductions due to turbines' clean fuel requirements, 2) regional NO_x reductions resulting from the increased efficiency of the cogeneration systems, and 3) small NO_x increases locally. The regional NO_x reductions would be largely lost and local increases made larger by 0.4 to 0.8 lb/100 kWh if NO_x controls were no longer required.

Finally, coal-fired steam turbine cogenerators are likely to create mild increases in NO_x and somewhat larger increases in SO_x emissions locally because of the increased fuel consumption at the site. Regional effects are mixed.

An Air Quality Analysis of Urban Diesel Cogeneration

To our knowledge, there have been few analyses of the air quality effects of an areawide installation of cogeneration equipment, and only one non hypothetical area—New York City—has been modeled explicitly. Both Consolidated Edison (ConEd), the utility serving New York City, and the New York State Public Service Commission staff have conducted dispersion modeling studies to evaluate the impacts of installing multiple cogenerators with a combined electric capacity of as much as 1,000 MW* (14,19,21). The results of these studies, which generally show

● The Con Ed analysis is reported in detail in Environmental Research and Technology, Inc. (19), and updated and revised in Freudenthal (21). The Public Service Commission analysis is described in Domaracki and Sistla (14).

adverse effects on air quality, have been widely disseminated by ConEd, which is opposed to urban cogeneration, and they have become controversial. Consequently, they deserve closer examination.

The most recent study by Con Ed examines the impact of installing 141 cogenerators in Manhattan, displacing 514 MW of ConEd's capacity as well as a considerable amount of space heating. In this study, annual nitrogen dioxide ($N0_2$) concentrations in a large part of Manhattan were predicted to increase by more than 14 pg/ms, with a resulting violation of Federal ambient standards in this area (21). This most recent version of ConEd's analysis corrects two major problems affecting the results of an earlier study examining the impacts of 1,086 MW of cogeneration capacity: collocation of multiple emission sources and location of receptors too close to emission sources (19).

However, evaluation of the most recent Con-Ed analysis should take into account the following considerations:

1. The analysis assumes an emission rate of 17.3 g/kWh of NO_x for the diesels. This appears to be a reasonable value for uncontrolled oil-fired diesels, but it is substantially higher than the approximately 10 g/kWh proposed for the Federal NSPS. Furthermore, diesels that do considerably better than the assumed uncontrolled rate are available, so that careful selection of manufacturers and models could yield significantly lower emissions even without adding controls. Consequently, the assumed emission rate is valid only if selection of diesels is made with no concern about their emission rate and if manufacturers of diesels make no attempts to reduce emission rates in the next few years.
2. The analysis examines only one distribution of sources and does not attempt to find a more acceptable pattern (e.g., by removing a few critical cogenerators). This implicitly assumes that air quality considerations will play no role **in the siting of cogenerators, and thus that permitting procedures are ineffective. This implicit assumption** has been challenged by the State Department of Public Service (DPS) (14). DPS notes that most cogenerators will undergo PSD reviews, and also that proliferation of cogeneration will result in an appropriate regulatory response on the part of the State. DPS believes that the present inadequacy of regulations for cogenerator siting is the result of the lack of development activity. However, there is no guarantee that local reviews, currently considered by some to be inadequate, will be sufficiently upgraded in response to a surge in cogeneration activity. In the testimony cited above, the witnesses agreed that none of the cogeneration sources included in the Con Ed analysis would have been prohibited under existing regulations,
3. ConEd has assumed that commercial cogenerators will be able to use only 50 percent of their recoverable heat (thermal efficiency of 52 percent), and residential cogenerators will use 75 percent of their recoverable heat (62 percent thermal efficiency). Available studies of cogeneration assume significantly higher thermal efficiencies, which in turn would change the emissions balance of cogenerator, central power station, and furnace or boiler in favor of the cogenerator. As discussed in chapter 5, ConEd's assumptions imply no thermal storage and "electrical dispatch"—running the cogenerator only when sufficient electrical demand exists. With the Public Utility Regulatory Policies Act of 1978 (PURPA), cogenerators are more likely to operate on "thermal dispatch" and distribute any excess electricity to the grid. Consequently, their overall efficiencies should be higher than what Con Ed assumes, with more favorable emissions balances.

Despite the inherent inaccuracy of diffusion models, especially in urban applications, it seems prudent to consider the prediction of a general increase in NO_x concentrations to be roughly accurate **for the particular situation examined.** The potential problems in ConEd's analysis with the cogenerator thermal efficiencies should not drastically affect this prediction. The remaining problems with the analysis, however, demand a very

careful interpretation: **OTA interprets the Con-Ed analysis as showing that any additional development—including multiple installations of diesel cogenerators—that could produce an increase in local urban emissions, might create air quality problems if adequate controls were not required and if permits were issued without careful consideration of stack height, siting, and other parameters affecting pollutant dispersion.** In areas where existing air quality is not substantially better than the Federal ambient standards, it appears likely that some permits may have to be denied to avoid violations of these standards.

Emission Controls

Potential air quality problems like the ones described above can be ameliorated if emissions can be controlled sufficiently. As noted previously, however, controls will not automatically be required by law in many situations, especially for small cogenerators such as diesels and spark-ignition engines that are not covered by Federal NSPS and may not be subject to State and local regulation. For technologies to which NSPS **do** apply (e.g., gas turbines) the required level of control may not be as stringent as the local air quality situation might call for, because most State and local environmental authorities are reluctant to go beyond the NSPS requirements. This section describes the available controls for NO_x emissions from reciprocating internal combustion engines and gas turbines. Emissions from industrial boilers (for steam turbine cogenerators) are not discussed, but EPA is preparing an NSPS background document for these emissions sources. *

Reciprocating Internal Combustion Engines

In 1979, EPA proposed an NSPS of 600 parts per million (ppm) NO_x corrected to 15 percent oxygen (equivalent to about 7 g/hph or about 2.2 lb/MMBtu fuel input) (2) for diesels burning oil or oil/natural gas combinations (39). This is an order of magnitude higher than emission rates from other combustion sources such as industrial boi!ers or even gas turbines (38). “Typical” uncontrolled NO_x levels from diesels are 11 g/hph (about 3.5 lb/MMBtu) for oil-fired engines and 8 g/hph (about 2.5 lb/MMBtu) for dual-fuel engines (39). As noted above, emission levels vary widely among different engine manufacturers and models.

Table 52 lists the wide variety of control options available to reduce NO_x emissions. In its efforts to formulate the internal combustion engine NSPS, EPA concluded that, of the methods shown in table 52, only retarded ignition timing, air-to-fuel ratio changes, decreased manifold air temperatures and engine derating were demonstrated to be effective and readily available for large engines (39). Exhaust gas recirculation and combustion chamber modification were considered to require additional development and durability testing, and the remaining methods were considered to have serious technical or cost problems, or to be of uncertain effectiveness for these engines.

The available control techniques do not work identically on diesel, dual-fuel, and natural gas-fired spark-ignition engines. Table 53 shows which techniques will achieve emission reductions of 20, 40, and 60 percent for the three engine types; the table also shows the expected increases in fuel consumption with these levels of emissions reductions. The increased fuel use, combined in some cases with higher maintenance costs and capital charges from add-on equipment, can cause significant increases in total costs; table 54 shows the increases in total annualized costs for different control types and emission reductions applied to diesel engines. ignition retard, with or without an air-to-fuel ratio change, and a combination of air-to-fuel change and manifold cooling can reduce NO_x emissions by 40 percent with total annualized cost increases of less than 10 percent. This level of control was selected by EPA for its proposed NSPS, although the proposal was withdrawn.

More recent information implies that greater NO_x emission reductions than those indicated by EPA may be possible. For example, although **EPA rejected water induction as a viable control strategy because of its potential for corrosion and oil contamination (39), the use of fuel/water emulsions or carefully timed direct injection apparently can bypass these problems (15). Control** levels

*A draft has been prepared by the Radian Corp.

98-946 O - 83 - 16 : QL 3

Table 52.—Summary of NO_x Emission Control Techniques for Reciprocating IC Engines

Control	Principle of reduction	Application	BSFC[a] Increase	comments-limitations
Retard Injection (CI[b]) Ignition (SI)[c]	Reduces Desk temperature by delaying start of combustion during the comustlon period.	An operational adjustment. Delay cam or Injection pump timing (CI); delay ignition spark (SI).	Yes	Particularly effective with moderate amount of retard; further retard causes high exhaust temperature with possible valve damage and substantial BSFC Increase with smaller NO_x reductions per successive degree of retard.
AIr-to-fuel(A/F) Ratio change	Peak combustion temperature Is reduced by off-stolchiometrlc operation	An operational adjustment. Increase or decrease to operate on off-stoichiometric mixture. Reset throttle or Increase air rate.	Yes	Particularly effective on gas or dual fuel engines. Lean A/F effective but llmited by mlsfirlng and poor load response. Rich A/F effective but substantial BSFC, HC, and CO Increase. A/F less effective for diesel-fueled engines.
Derating	Reduces cylinder pressures and temperatures.	An operational adjustment, limits maximum bmep[d] (governor setting).	Yes	Substantial Increase In BSFC with additional units required to compensate for less power. HC and CO emission increase also.
Increase-speed	Decreases residence time of gases at elevated temperature and pressure.	Operational adjustment or design change.	Yes	Practically equivalent to deratlng because bmep is lowered for given bhp requirements. Compressor applications constrained by vibration considerations. Not a feasible technique for existing and most new facilities.
Decreased Inlet manifold air temperature	Reduces peak temperature.	Hardware addltlon to increase aftercooling or add aftercoollng (larger heat exchanger, coolant pump).	No	Ambient temperatures limit maximum reduction. Raw water supply may be unavailable.
Exhaust gas recirculation (EGR)				
External	Dllutlon of incoming combustion charge with inert gases. Reduce excess oxygen and lower peak combustion temperature.	Hardware addition; plumbing to shunt exhaust to Intake; coollng may be required to be effective; controls to vary rate with load.	No[e]	Substantial fouling of heat exchanger and flow passages; anticipate increased maintenance. May cause fouling in turbocharged, aftercooled engine. Substantial Increases In CO and smoke emissions. Maximum recirculation llmlted by smoke at near rated load, partlcularly for naturally aspirated engines.
Internal:				
Valve overlap or retard	Cooling by increased scavenging, richer trapped air-to-fuel ratio.	Operational hardware modification: adjustment of valve cam tlmlng.	Yes	Not applicable on natural gas engine due to potential gas leakage during shutdown
Exhaust back pressure	Richer trapped air-to-fuel ratio.	Throttling exhaust flow.	Yes	Limited for turbocharged engines due to choking of turbocompressor.
Chamber modlflcation Precombustion (CI) Stratified charge (SI)	Combustion In antechamber permits lean combustion In main chamber (cylln-der) with less available oxygen.	Hardware modification; requires different cylinder head.	Yes	5 to 10 percent increase In BSFC over open-chamber designs. Higher heat loss implies greater cooling capacity. Major design development.
Water Induction	Reduces peak combustion temperature.	Hardware addition: inject water into inlet manifold or cylinder dlrectly; effective at water-to-fuel ratio 1 (lb H_2)/lb fuel).	No	Deposit buildup (requiring demineralizatlon); degradation of lube oil, cycling control problems
Catalytic *conversion*	Catalytic reduction of NO to N_2.	Hardware addition; catalytic converter installed In exhaust plumbing or reducing agent (e.g. ammonia) injected Into exhaust stream.	No	Catalytic reduction of NO is difficult in oxygen-rich envlronment. Cost of catalyst or reducing agent high. Little research applied to large-bore IC engines.

aBSFC-brake specific fuel consumption.
bCompression Ignition.
cSpark Ignition.
d bmep—brake mean effactlve pressure.
e If EGR rates not excessive.

SOURCE: Environmental Protection Agency, *Standards Supporf and* Environmental *Impact Statement for Stationary Internal Combustion Engines* (EPA-450/2.7&125a, draft, July 1979).

Table 53.—NO_x Control Techniques That Achieve Specific Levels of NO_x Reduction

NO_x reduction	Diesel		Dual fuel		Natural gas	
	Control (amount)	Δ BSFC,[a] %	Control (amount)	Δ BSFC,[a] %	Control (amount)	Δ BSFC,[a] %
20%0	Retard (2° to 4°)	o to 4	Retard (2° to 3°)	1 to 3	Retard (4° to 5°)	1 to 4
	External EGR (7%)	o	Manifold air coolIng	1	Manifold air cooling	0
	Derate (25 to 5070)	3 to 5	External EGR (lO%)	1	External EGR (4%)	o
	Air-to-fuel change (25%)	10	Derate (12 to 25%)	O to 8	Derate (5 to 35%)	2 to 6
	Retard and manifold air cooling	o to 1	Air-to-fuel changes (5 to IO%)	o to 2	Air-to-fuel change (570)	2
	Retard and manifold air cooling and air-to-fuel change	o to 1				
40%	Retard (7 to 8°)	4 to 8	Retard (5°)	2	Retard (10°)	2
	Derate (50%)	14 to 17	Manifold air cooling	1	Derate (10 to 50%)	2 to 24
	Air-to-fuel change and manifold air cooling	3 to 5	Derate (30 to 50%)	2 to 8	Air-to-fuel change (7%)	2
	Retard and air-to-fuel change	3 to 5	Air-to-fuel change (lO%)	2	Retard and manifold air cooling and air-to-fuel change	7
			Retard and manifold cooling	3		
6 0 %	Retard (16°)	19 to 24	Retard (6°)	2	Derate (10 to 50°/0)	2 to 22
	Retard and air-to-fuel change	21	Derate (50%)	12	Air-to-fuel change (8 to 12%)	2 to 5
			Retard and air-to-fuel change	1 to 3	Retard and manifold air cooling and air-to-fuel change	7

[a] Δ BSFC - change in brake specific fuel consumption.

SOURCE: Environmental Protection Agency, *Standards Support and Environmental Impact Statement for Stationary Internal Combustion Engines* (EPA-450/2-78-125a, draft, July 1979).

Table 54.-Costs of Alternative NO_x Controls for Diesel Cogenerators (percent Increase In total annualized costs)

NO_x control Percent reduction	Retard (R)	Derate	External EGR	Air to fuel (A)	R + M[a]	R + M + A	R + A	A +M
200/0	o-3	9-31	6	8	2	3		
40%	3-6	37-40					4	4
60%	14-18						16	

[a] Manifold air cooling.

SOURCE: Office of Technology Assessment, from Environmental Protection Agency, *Standards Support and Environmental Impact Statement for Stationary Internal Combustion Engines* (EPA-450/2-78-125a, draft, July 1979).

of 50 percent or greater have been achieved with these techniques, with some parallel decreases in particulate emissions* (43). Another, more speculative NO_x control approach is the use of catalytic reduction systems. The staff of the California Air Resources Board (CARB) reports that NO_x reductions of 90 to 95 percent can be obtained from such catalytic systems (35). They also expect the systems to reduce CO emissions by 80 percent and hydrocarbon emissions by 75 percent. Catalytic reduction systems are currently available for rich-burning natural gas spark-ignition engines, and the CARB staff expects them to be available for the other engine types within a year or so, at costs below 10 percent of total annualized costs (3). However, this projection is viewed with various degrees of skepticism by other researchers (2).

*Wilson (42) reported that water/fuel emulsion achieved 50 percent NO_x reduction at full engine load with no fuel penalty. At part-load (66 to 93 percent), NO, reductions of 75 percent were achieved with a combination of exhaust gas recirculation and water/fuel emulsion.

Combustion Turbines

The Federal NSPS for large combustion turbines (above 100 MMBtu/hr) is 75 ppm NO_x corrected to 15 percent oxygen, which is equivalent to about 0.3 lb/MMBtu NO_x (40). For comparison, a typical emission factor for NO_y emissions from an industrial boiler burning distillate oil is about half as much, or 0.16 lb/MMBtu (38). "Typical" uncontrolled NO_x levels from turbines are 0.6 lb/MMBtu for natural gas-fired engines and 0.9 lb/MMBtu for oil-fired engines (40). However, the

variation in emissions among different turbine designs and sizes and even in the same turbine under different operating conditions is extremely high. Thus, the "typical" values are of limited usefulness in air quality analyses.

The most widely used emission control systems for combustion turbine NO_x emissions are so-called "wet" controls, which consist of water or steam injection into the combustion zone of the turbine. The injected fluid absorbs some of the heat of reaction, reducing peak combustion temperatures and, consequently, the rate of NO_x formation. This control is accepted by the industry and does not have significant adverse side effects. Generally, a water/fuel injection ratio of 1.0 will produce a 70- to 90-percent reduction in NO_x emissions, with a loss of fuel efficiency of 1 percent (40).

This range of control effectiveness, coupled with the variability in uncontrolled emission levels, results in actual controlled emissions that vary widely. EPA has measured "controlled" NO_x emissions of 15 to 50 ppm for gas-fired turbines and 25 to 60 ppm for oil-fired turbines (40). This implies that appropriate selection of turbine design could allow the use of turbines in certain situations where an "NSPS" turbine would be unsatisfactory.

Still more stringent control may be available by adding so-called "dry" controls. These are operating or design modifications such as exhaust gas recirculation, two-stage combustion, catalytic combustion, and other types of modifications. NO_x reductions of at least 40 percent have been demonstrated for some dry controls, and this reduction should be additive to any achieved with wet controls (40).

Finally, catalytic exhaust gas cleanup systems achieving NO_x reductions of 80 to 90 percent have been tested (40). Although these systems do not appear to be economically competitive with wet and dry controls, they could be useful if fuels with high nitrogen content were to be used (otherwise, the only viable control for NO_x generated by fuel-bound nitrogen is two-stage combustion) (40).

EPA has calculated the net NO_x emission control costs using wet controls for a baseload 4,000 hp industrial turbine. For a plant located close to a water source, the controls cost about 0.6 mills/kWh v. a total electricity cost of 32.5 mills/kWh, or a 1.75-percent increase (40). Transporting water for a turbine located in an arid climate could add considerably to this cost, however. Considering this and other cost variables, EPA considers the range of potential control costs to achieve the 75 ppm NSPS to be about 1.5 to 10.0 percent of the electricity cost for industrial turbines (40).

Health Effects From Cogenerator Emissions

Theoretically, any allowed increases in the deployment of cogeneration technologies should have no significant adverse effects on human health due to the protection afforded by environmental standards—especially the National Ambient Air Quality Standards (NAAQS). As discussed above, however, these standards might be violated because of ineffective permit review processes that miss "micro" (close to the emission source) effects in urban areas or that allow small cogenerators to escape careful analysis. The smallest cogenerators generally will be diesels, and these may therefore have the highest potential to escape detailed review of monitoring and, possibly, to pose health hazards. Judging from the emissions balances displayed in table 53 and from other environmental analyses of cogeneration, the pollutants of major concern are NO_x, sulfur dioxide ($S0_2$), and particulates-the latter not because of a high emission rate but because of their toxic character.

Due to of a variety of difficulties in measuring the health effects of pollutants, several of the Federal ambient standards–especially the standard for $S0_2$—have been criticized severely. A recent review in the Journal of the Air Pollution Control Association (JAPCA) concludes, however, that the standards "seem adequate to protect the health of the public" and, "until more data are available . . . should not be changed" (20). On the other hand, a number of other researchers disagree, arguing that some of the standards have proved to be unnecessarily stringent (23). The health and other considerations relevant to eval-

uating the NAAQS for $S0_2$, NO_x, and particulate are reviewed briefly below.

Sulfur Oxides

The 80 ug/m^3 long-term standard for $S0_2$ is the most controversial NAAQS because of the substantial expense involved in reducing sulfur emissions and, until recently, the lack of firm evidence of adverse health impacts from $S0_2$ exposure even at levels several times the current standards. Recent experiments, however, have demonstrated health effects in asthmatics (increases in bronchoconstriction) at levels near the current 24-hour standard (36). Also, exposure to $S0_2$ virtually always occurs in the presence of particulate and other gases, and generally there is a heightened response from the combination of pollutants. At levels around the ambient standards (100 ug/m^3 $S0_2$ and 150 ug/m^3 particulates, annual averages), respiratory symptoms, including general lung function impairments and increased asthma attacks, have been detected (33).

Nitrogen Oxides

The form of most of the NO_x emitted directly by diesels and other cogenerators is nitrous oxide, or NO; eventually, the NO is transformed by photochemical oxidation to the far more toxic $N0_2$. Because this oxidation takes sometime, the danger associated with a cogenerator's plume impacting on nearby buildings or the ground is considerably lessened.

At levels that maybe experienced in polluted areas (a few hundred ug/m^3), $N0_2$ appears to be associated with lung irritation in asthmatics and some increases in respiratory illness in the general population. According to the JAPCA review cited above, the epidemiologic evidence for the latter effect is not particularly strong (20). In any case, there seems to be little disagreement that the 100 ug/ms (annual average) ambient standard is adequate to protect public health. EPA currently is investigating the need for a short-term standard to protect against the acute effects of brief pollution episodes. It appears likely that this standard will be no stricter than about 500 ug/m^3 for 1 hour.

Diesel Particulate

Aside from their relatively high levels of NO_x and CO emissions compared to alternative combustion technologies, diesel cogenerators face the additional problem of producing particulate emissions that **may** cause adverse health effects. These effects, if they occur, would most likely stem from toxic substances such as polycyclic organic material that adhere to the carbon core of the exhaust particles. The small size of the particles complicates their control, allows them to remain airborne for weeks at a time, and allows deep penetration into and retention by the lungs.

The National Academy of Sciences recently released a report on diesel exhaust health effects that stresses the uncertainties in measuring the potential for adverse effects of these exhausts, while emphasizing that conclusive evidence of harm is not available (25). Some of the conclusions of the report are:

- Although current epidemiologic evaluations (statistical analyses of human populations) are inadequate, the available evidence shows no excess risk of cancer from diesel exhaust in the populations studied.
- Organic extracts (in which the potentially harmful organic compounds are removed, using a solvent, from the carbon particles to which they adhere) of diesel particulate have been shown to be mutagenic and carcinogenic in animal cell and whole animal skin applications. The mutagenic and carcinogenic potencies of these organic extracts appear to be similar to those of extracts of gasoline engine exhaust, roofing tar, or coke-oven effluent.
- Unlike the extracts, inhaled whole diesel exhaust has not been shown to be carcinogenic or mutagenic in laboratory animals. A **possible reason for this could be that many of the potentially dangerous compounds may not be released from the particles and thus may** not become biologically available to cause harm. *

*However, another reason could be that the tissue **tests used** for these investigations do not adequately reflect what would actually go on inside the body.

- Potentially toxic particles can accumulate in the lungs when diesel exhaust is inhaled, but long-term effects are uncertain. In the short term, cell damage (mostly reversible) can occur because the diesel exhaust can adversely affect the lungs' defense and clearance mechanisms; it is not clear if this is caused by the particles or by the gases in the exhaust.
- The design and operating characteristics of the engine may be a significant determining factor in the carcinogenicity of diesel engine exhaust materials.

Evaluating the potential for harm of diesel particulate from cogenerators is complicated by differences in operating characteristics between cogenerators running at constant speeds and relatively stable loads, and mobile sources running at varying speeds and loads. Mobile sources (from which most of the emission data have been gathered) operate at far less optimal combustion conditions and produce more particulate matter. It is not unreasonable to speculate that the human health risk from diesel cogenerators **per unit of energy input or output** may be significantly lower than the risk from mobile diesels; however, scientific data with which to confirm or deny this speculation do not appear to be available.

Effects of Some Other Cogeneration Technology/Fuel Options

Although oil-fired and dual-fuel diesels, oil- and natural gas-fired combustion turbines, and multifuel steam turbines are the most likely cogeneration options for the immediate future, other technology or fuel choices will be open to potential cogenerators.

Spark=Ignition Engines

Fiat recently introduced a natural gas-fired spark-ignition cogenerator—called TOTEM–based on its automobile engines. Because the TOTEM modules are extremely small (15 kw), they may escape careful permitting by local authorities. Proliferation of such cogenerators in urban areas could conceivably lead to air quality problems.

EPA data indicate that gas-fired spark-ignition engines have higher NO_x emissions than diesels (sales-weighted average of about 4.6 lb/MMBtu v. about 3.5 lb/MMBtu for diesels) (39). On the other hand, Fiat and Brooklyn Union Gas claim NO_x rates of about 3 lb/MMBtu as well as extraordinarily high thermal efficiencies (91 percent) that would maximize the emission displacement of the cogenerator (6). Either emission level can present a problem, however, because the small TOTEM engines would not be subject to the proposed NSPS for stationary internal combustion engines, and even the lower rate is quite high in comparison with competing combustion sources.

Alternate-Fuel Diesels

Although natural gas/diesel fuel mixtures and straight diesel fuel are used in stationary diesels today, residual fuel currently is used in large marine diesel engines and will be available for stationary engines. Coal-derived fuels in the form of synthetic oil, coal slurry, and dry powdered coal may be used in future engines (see ch. 4).

Use of residual oil in diesels should affect SO_x emission levels because residual oil generally has higher sulfur levels than distillate fuels. According to available data, however, levels of other emissions should not be affected significantly in comparison to current diesels (27). Diesels using coal-derived synthetic residual oil exhibit similar characteristics, although synfueis that have not been hydrotreated will contain levels of fuel-bound nitrogen that are generally higher than those in natural oils and consequently will cause elevated NO_x emissions (24).

The use of coal slurries and powdered fuels should adversely affect levels of NO_x, SO_x, and particulate. Table 55 shows expected values of

Table 55.-Emissions From Oii- and Coai-Fired Dieseis

Fuel	Emissions (lb/M MBtu)		
	NO.	so..	Particulate
Diesel Oil[a]	3.46	0.2[c]	0.07
Coal slurry[b]	3.61	I.5[d]	3.26
Coal[b]	4.35	1 .5[d]	8.91

aSource is app. A.
bReference 47.
cAssumes 0.2% sulfur distillate oil.
dAssumes 2% sulfur coal, 25 MMBtu/ton.

these fuels compared to average emissions from oil-fired diesels. The level of particulate emissions is so high as to virtually guarantee that an uncontrolled coal-fired engine would be environmentally unacceptable. Based on an extrapolation from ConEd modeling studies (19), it is possible that a proliferation of such diesels in urban areas would create significant problems with all three pollutants unless emission controls were used.

Atmospheric Fiuidized Bed

Steam turbines using coal-fired atmospheric fluidized bed (AFB) boilers can achieve low SO_x emission rates without generating large amounts of scrubber sludge, and probably will have NO_x emissions below current NSPS for steam turbines. Although the action of the bed creates potentially high levels of particulate emissions, baghouse controls should keep actual emissions to ve~ low levels. The AFB boiler at Georgetown University in Washington, D.C. (which is a **potential** cogenerator although it currently does not generate electricity) has now been operating without environmental complaints for a few years.

Closed-Cycle Gas Turbines

Closed-cycle gas turbines use an external heat source to produce high-temperature gas. Although emissions depend on the nature of the heat source and fuel used, emission control should present no unusual problems.

Methanol-Fired Gas Turbines

There is a reasonable probability that significant quantities of methanol from biomass and coal resources may become available within a few decades. Methanol is a suitable fuel for gas turbines and might be an advantageous fuel in turbine cogenerators because of the expected substantial drop in NO_x emissions. Methanol has achieved 76-percent reductions in NO_x emissions from large turbines because it has a significantly lower combustion temperature than distillate fuels (28).

Policy Options: Removing Environment= Associated Regulatory Impediments

In general, Federal, State, and local authorities treat cogenerators in an identical fashion with other stationary combustion sources. For example, both Federal NSPS and local emission standards for all combustion sources are tied to fuel input rather than energy output, and thus do not consider the energy efficiency of the system. In other words, two diesel generators that use the same amount of fuel are limited to the same levels of emissions, even if one produces more usable energy than the other. Also, facilities are designated as “major sources” subject to PSD and nonattainment review only on the basis of their emissions output, without consideration of any emissions reductions their use might cause in other facilities. Finally, new sources locating in nonattainment areas are awarded emission offsets only to the extent that other sources within the same locale agree to reduce their emissions permanently and transfer the pollution rights obtained by the reduction to the new source. Thus, cogenerators are not automatically given preferred treatment to account for their increased efficiency or their displacement of centrally generated electricity.

It has been suggested that cogenerators should be given various types of preferred treatment with regard to air quality concerns to facilitate their market entry (12, 16,22). Two basic changes that have been recommended are:

- That emissions standards account for high cogenerator efficiency, either by being tied to the energy ***output*** rather than the fuel ***input*** of the source, or by having separate (more lenient) standards for cogenerators.
- That restrictions on new sources under PSD and nonattainment area provisions of the **Clean** Air Act (see ch. 3) be reduced or eliminated for cogenerators. For example, the

250-tpy emissions trigger could be relaxed by allowing the cogenerator to subtract emissions that are eliminated at the central power station. Only if net ***emissions*** exceed the trigger levels would the provisions apply. An alternate or additional policy would be to shift the responsibility for obtaining emissions offsets to the State, or to allow the cogenerator to count any reduction in central station power generation as an offset.

Each of these policy alternatives is evaluated below.

Emission Standards Based on Output

Because cogenerators generally produce considerably more useful thermal and electric energy than the same equipment generating only electricity, basing emission standards on energy output rather than fuel input would significantly reduce the emission control requirements for cogenerators and should lower their overall costs. Thus, this policy would make cogeneration more competitive in the marketplace, although the extent of any advantage will vary substantially from case to case.

The major environmental argument for this policy alternative is that, for a given amount of useful energy, a cogenerator will produce less pollution than a separate generator and thermal energy source and thus should be rewarded for this benefit (4,41). This argument generally is valid only when a cogenerator would replace an otherwise identical generator, using the same technology and fuel. As discussed above, many cogenerator applications involve new technology or fuel substitutions (e.g., diesel cogenerators replacing steam turbines and boilers or furnaces), as well as changes in scale. As shown in the section on emissions balances, the net result is quite often an emissions **increase.** Furthermore, the pollution impact of most concern often is the local air quality impact, and this may not be improved by the reduced emissions at a distant powerplant as a result of the addition of cogeneration. Finally, the legislative philosophy associated with NSPS is that all important new stationary sources should apply the best control technology available to them, taking into account energy, economic, and non-air quality environmental factors. Some potential cogenerators might try to argue that these energy and other considerations justify a different interpretation of "best technology" in their case. Based on the analysis of the environmental costs and benefits of cogeneration in this report, however, it appears that such an argument would not be valid for all cogenerators. Thus, cogeneration emission standards based on energy output should only be applied on a case-by-case, or technology- and area-specific basis, if at all.

Changes in Offset Requirements

As shown in table 56, the costs incurred in being designated a "major source" under either PSD or nonattainment area provisions are high and will affect the economic attractiveness of cogeneration (17). In addition to the costs of performing the necessary environmental analyses, the added costs of obtaining emissions offsets (if any are available) and installing lowest achievable emission rate (LAER) controls may effectively block cogenerators (and most other types of stationary sources) from locating in nonattainment areas. Thus, policies that reduce or eliminate the review requirements (and, for nonattainment areas, the offset requirements) for cogenerators would be removing important impediments to these technologies.

The major argument against automatically crediting the reduction in central station power requirements in applying PSD and nonattainment

Table 56.-Approximate Costs of Procedures Required Under the Clean Air Act

Procedure	cost to cogenerator
Engineering review	$100-500
Stage 1 PSD review (attainment)	$1,000-2,000
Monitoring—1 year	
One pollutant	$30,000
Six pollutants	$125,000
Stage 1 interpretive ruling (nonattainment)	$2,000
TSP/SO_2 modeling	$10,000-20,000

NOTES: Any of these costs may or may not be incurred, depending on the individual case. These figures assume a simple, "major source" case.

SOURCE: Office of Technology Assessment, from Michael S, Dukakis, *Governor's Commission on Cogeneration, Cogeneration: Its Benefits to New England* (Governor of Massachusetts, October 1978).

rules is that the benefit of this reduction to the airshed in question is often either illusory or very difficult to calculate. As noted previously, the corresponding emission reduction may be out of the airshed altogether, or the reduced power requirements may be shifted among different plants at different times according to the utility's economic dispatch methods and the overall supply/demand balance of the grid. Also, when the central powerplant has a very tall stack, its effect on the air quality of a particular airshed maybe far less, per unit of power, than the effect of cogenerators. Finally, in the case of a large new cogenerator, the "offset" utility emissions may be from a projected powerplant rather than from an existing facility. Because any future powerplant would have to comply with PSD or nonattainment requirements if its emissions affected the airshed, it is not logical that the plant's replacement or "offset" —the cogenerator—should be freed from these requirements.

To summarize, these policy alternatives do appear to be attractive if the primary objective is to promote cogeneration. However, **widespread** application of regulatory relief to cogenerators **as a class** is difficult to justify on environmental grounds. On the other hand, the existence of situations where air quality benefits and oil savings will accrue from cogenerators may justify awarding some relief on a case-by-case or technology- and area-specific basis.

Other Potential Impacts

Although the potential air quality effects are the major environmental concern associated with cogeneration systems, potential impacts from water discharges, solid waste disposal, noise, and cooling tower drift are important and must be addressed satisfactorily to avoid local opposition to these cogenerators.

Water Quality

Water discharges are associated primarily with blowdown from boilers and wet cooling systems. Pollutants of concern are suspended solids, salts, chlorine, oil and grease, and chemical corrosion inhibitors. For large coal-fired steam turbine cogenerators, potential discharge sources include runoff from coal storage piles, scrubber effluent from $S0_2$ control systems, and discharges from ash quenching. These discharges are the same as would occur in conventional steam turbine combustion systems, although any wet cooling systems clearly would be smaller because much of the waste heat is captured in a cogenerator and need not be discharged to the environment. Some of the discharges may present special problems, however, because the cogenerators may be located in urban areas whose sewage treatment facilities are not designed to handle industrial discharges. Onsite pretreatment (before discharge into the municipal system) may be necessary to avoid problems from these discharges.

Solid Waste Disposal

Disposal of ash and scrubber sludge could also present some difficulties for urban and suburban coal-fired cogenerators due to the lack of secure landfill areas. Municipal landfills may be inadequate due to the toxic metals content of the ash, and long-distance and expensive shipping of these wastes might be necessary.

Noise

Operating cogenerators and trucks supplying fuel to cogenerators may produce high noise levels in urban areas. For example, a recent study of the Jersey City Total Energy Demonstration project, which uses diesel cogeneration, measured sound levels of 65 dB(A) (loud enough to interfere with a normal conversation) at a distance of 75 ft from the equipment building (1 3). This might be considered unacceptably loud for a night-time noise level in a residential area. Similarly, the noise from fuel trucks may be considered disruptive, although the effect of supplying oil-fueled furnaces and boilers may be as disruptive, if not more so, because furnaces and boilers are likely to require more frequent fuel deliveries than cogenerators. In any **case, noise** control measures are readily available. These include careful scheduling of fuel deliveries, installing mufflers, or adding sound absorbing materials to equipment and buildings to reduce engine noise.

Cooling Tower Drift

Cooling tower drift-the discharge and dispersal of small droplets of water from wet cooling towers—is a potential source of problems in urban areas. These droplets will contain anticorrosion chemicals and biocides and will have a high salt content caused by the concentrating effect of the evaporative cooling. In the Jersey City demonstration project mentioned above, inadequate maintenance of the system led to spotting of nearby automobiles and an annoying misting of pedestrians (1 3). Although the effects in the Jersey City case appear to represent a nuisance rather than a hazard, negative community reaction to this as well as other visible adverse effects of cogenerators may play a significant role in their further deployment.

POTENTIAL REGULATORY BURDEN ON ENVIRONMENTAL AGENCIES

Cogeneration usually involves shifting environmental impacts-primarily effects on air quality—away from a few central powerplants to a larger number of small sources. Although cogeneration will not be subject to as many permitting requirements as large central generating plants (see ch. 3), multiple installations could lead to increased permit applications and more sources that must be monitored and inspected. In some areas, State and local environmental protection agencies may not have the resources to accommodate such an increase in their workload. If this is the case, cogenerators could be inadequately monitored and controlled, and substantial adverse impacts could occur (see discussion of environmental impacts, above). *

To determine whether cogeneration would significantly increase the workload of environmental agencies, OTA first estimated current workloads and resources of the various Federal and State permitting agencies in two States–Colorado and California—based on interviews with agency personnel.** Those interviews also revealed current management concerns about existing and future caseloads. Then the increased permitting, monitoring, and enforcement responsibilities attributable to cogeneration were calculated from State agency market penetration projections, and compared to the existing workloads to determine the potential regulatory burden.

The results of this analysis suggest that cogeneration is likely to have a minimal impact on environmental caseloads in these two States because the increase in agency resources needed to regulate cogeneration is very small when compared to existing workloads. Possible exceptions would be areas where agencies were already understaffed prior to the Federal (and many State's) budget reductions of 1981 and 1982–usually water quality and right-of-way programs, or where economic or other legislative incentive programs for cogeneration impose significant new responsibilities on agency staff.

Environmental Permitting and Enforcement Agencies

Four regulatory agencies in **Colorado** have direct jurisdiction over cogeneration facilities, while approximately seven others regulate associated facilities such as transmission and distribution systems.

Permitting and enforcement of the Clean Air Act are shared by the region Vlll offices of EPA and the Air Pollution Control Division of the Colorado Department of Health. The division administered approximately 400 permits in 1980 and conducted approximately 4,900 inspections. Discussions with agency personnel revealed no major enforcement problems in 1980. EPA region Vlll administers the PSD program in Colorado. They processed 40 to 50 permit applications in 1980 and they typically conduct oversight inspections of roughly 10 percent of the major sources **in the State each year.**

***The analysis in this section is drawn from Energy and Resource Consultants, Inc. (17).**

****In Colorado, the Department of Natural Resources, the Office of Energy Conservation, and the Colorado Energy Research Institute were contacted. In California, the California Energy Commission and the Cogeneration Task Force were contacted.**

The water programs are administered by the Water Quality Control Division of the State Department of Health and by the Army Corps of Engineers. The Water Quality Control Division administers the section **401 and the National Pollution Discharge Elimination System (NPDES) permits. The section 401 program (primarily applicable in this context to transmission and distribution systems) had one staff member who issued 200 water quality certificates in fiscal year 1980. The NPDES program also suffers from insufficient manpower; almost 300 applications** for new permits or for amendments to existing permits were awaiting action at the end of 1980. Time pressures on the staff members are felt to impair the quality of the reviews for permits being issued, possibly resulting in inadequate controls. The Water Quality Control Division initiates 30 to 45 enforcement actions per year, but many violations by minor sources are ignored due to lack of manpower.

The Army Corps of Engineers administers the section 404 permits through their district offices in Sacramento and Omaha. The Sacramento District maintains an area office in Grand Junction, Colo., with three full-time personnel. In 1980, this office issued approximately 40 applications for section 404 or section 10 permits in process, 50 violations (generally involving unpermitted work—their biggest problem), and 150 to 175 individual permits (these have a normal term of 3 years, with extensions available). They also supervised approximately so operations under general permits.

Applications for rights-of-way in Colorado are handled by the State Board of Land Commissions, the Bureau of Land Management (BLM), and the U.S. Forest Service. Right-of-way applications have been a bottleneck in the permitting process, with application processing lasting up to 1 year.

In summary, the programs concerned with water quality (sec. 401, sec. 404, NPDES) are at present less effective than they might be, due largely to manpower limitations. Delays in processing right-of-way applications in the district offices of BLM and the Forest Service, which in large measure reflect manpower limitations, change from year to year and district to district, reflecting the variability in applications filed and resources at each district. If dispersed facilities sharply increased the number of right-of-way applications, this permit could become a severe bottleneck.

California environmental agencies are subdivided into numerous regional and district offices (see ch. 4). For example, 46 separate air pollution control districts (APCDS) are responsible for administering air permits and each district has different permitting requirements. As a result, only sampled agency districts or regions that are considered representative are discussed explicitly.

The 46 APCDS in California vary from rural counties with one full-time employee, to the Bay Area and South Coast Air Quality Management Districts with over 200 and 400 full-time employees, respectively. The Sacramento County APCD employs two people to permit 150 to 200 sources per year. permits require up to 2 months to be processed. There are no sources in the district with continuous monitoring, and one of three inspectors visits each major source from two to five times per year. Telephone contacts with these and other APCDS revealed no major enforcement concerns in 1980.

The nine Regional Water Resources Control Boards administer the waste discharge requirement program in California. Region 5, headquartered in Sacramento, has approximately 20 personnel to handle all phases of the program. Approximately 150 permits are issued each year, 25 percent of which are NPDES permits. Major sources are inspected twice a year, minor sources perhaps once every 3 years, and about 2,000 sources maintain self-monitors and report quarterly to the regional board. Telephone contacts with these and several other regional boards revealed no major management problems.

California is included in two Corps of Engineers Districts, Los Angeles and Sacramento. The "navigation" branch of the Los Angeles District is in charge of permitting and enforcement under *the* section 404 program. The Corps presently suffers from a manpower shortage, as revealed by the increased number of unresolved violations (from

66 to 78); enforcement generally is the lowest priority action for the district.

Rights-of-way for dispersed generating facilities in California will be sought from three agencies: the State Lands Commission, BLM, and the Forest Service. Conversations with agency personnel indicated that at present they were adequately staffed in 1980, with the possible exception of the Forest Service.

In summary, the information collected regarding the caseloads and personnel of California environmental agencies showed them to be, in general, better staffed than their counterpart agencies in Colorado. However, legislation enacted in California in 1981 that requires the State Air Resources Board and the APCDS to mitigate the air quality impacts of cogenerators smaller than 50 MW, and to secure offsets for them, could tax the resources of the APCDS. Also, as in Colorado, the agencies administering the water programs (NPDES, sec. 404 and sec. 401 programs) appear to suffer from manpower shortages that result in lax enforcement. Finally, the rights-of-way for facilities on Federal lands administered by BLM or the Forest Service could be a bottleneck in the permitting process if the number of applications increased significantly or the number of personnel to process them decreased.

Potential Impacts on Agency Caseloads

Few market penetration estimates are available for cogeneration (see ch. 5). Therefore, to gauge the effects of cogeneration permitting and enforcement on agency caseloads, State agencies primarily responsible for cogeneration's development or regulation were contacted and asked to provide their best estimates for potential development through 2000. The results of this informal survey are presented in table 57. It should be emphasized that these are not official or precise estimates based on any formalized methodology, but instead typically were the result of "brainstorming" sessions held by agency personnel. To determine the permit and other regulatory requirements of the amount of cogeneration capacity shown in table 57, assumptions were made concerning, among other things, the size and location of the facilities.

Table 57.—Penetration Scenario for Cogeneration in California and Coiorado

Year	MW capacitv installed	
	California	Colorado
1985	1,700	170
1990	2,300	230
1995	3,600	360
2000	6,000	600

SOURCE: Energy and Resource Consultants, Inc., *Federal and State Environmental Permitting and Safety Regulations for Dispersed Electric Generation* Technologies (contractor report to the Office of Technology Assessment, 1980).

First, it was assumed that, in Colorado, all new cogeneration units will file an Air Pollution Emissions Notice (APEN). Second, PSD permits were assumed to be required under the Clean Air Act for all sources over 10 MW and for one-half of the sources under 10 MW. Third, 25 percent of cogeneration units were assumed to require an NPDES, section 401 or 404 permit under the Clean Water Act. Fourth, 25 percent of cogeneration units would require State and/or Federal rights-of-way, and 25 percent also were assumed to require consultations with wildlife and historical agencies.

The market penetration assumptions and their assumed regulatory requirements were combined to estimate the increased agency responsibilities for permitting and enforcement due to cogeneration. The results of this analysis must be viewed as one possible scenario out of many plausible futures due to the large uncertainties in working with informal market penetration estimates. However, it can be stated that the results presented below are a **high estimate** of the increased regulatory burden because the deployment assumptions described above are based on size or siting conditions that would result in many cogenerators being subject to the full range of regulatory requirements. If cogenerators tend to be smaller or located in different areas, then the increase in permitting and enforcement responsibilities would be less than that shown below.

Colorado

The projected increases in agency workloads in Colorado due to the future deployment of cogeneration technologies are presented in table 58. There is expected to be an increase of less

Table 58.—increase in Agency Workloads Due to the Deployment of Cogeneration Technologies in Colorado

Agencv	Current staff	Current case load	Projected average increases in cases per year 1981-85	1988-90	199; -95	1998-2000
1. Air Pollution Control Division, Colorado Department of Health:						
1. Air Pollution Emission Notices.	4	480	2	3	4	7
2. Inspections.	20	900	6	18	39	81
II. Region VIII–EPA:						
1. PSD permits	5	45	1	2	3	7
2. Inspections.	8	300	3	9	18	39
III. Water Quality Control Division, Colorado Department of Health:						
1. NPDES permits	12	300	1	1	1	2
2. Sec. 401 certificates	1	200	1	1	1	2
3. inspections	12	1,000	3	6	9	15
IV. Army Corps of Engineers, Omaha District: 404 applications	20a	475[a]	1	1	1	2
Sacramento District: 404 applications (Colorado only)	4	40	1	1	1	2
V. State Board of Land Commissioners (right-of-way applications and commercial leases)	1	75	1	1	1	2
VI. BLM-State Office (right-of-way applications)	12	185	1	1	1	2
VII. State Division of Wildlife (consultations)	18	75	1	1	1	2
VIII. Colorado Historical Society (consultations)	6	1,200	1	1	1	2

a For the entire district.

SOURCE: Energy and Resource Consultants, Inc., *Federal and State Environmental Permlttlng and Safety Regulations for Dispersed Electric Generation Technologies* (contractor report to the Off Ice of Technology Assessment, 1980).

than 1 percent in annual APEN filings due to cogeneration during the 1981-85 period, and only a 3-percent increase (over the 1980 base year) during 1996-2000. Increases in other types of permits are even smaller.

The impact on **the number of inspections** can be greater (depending on the current caseload) due to the fact that a permit is only granted once, whereas each facility must be inspected every year. Thus, inspections are cumulative and the agency must inspect not only the facilities permitted this year, but also all facilities permitted in previous years that are still operating. Still, only a 10-percent increase in the number of required air pollution inspections is shown through 2000.

California

Table 59 presents a similar estimate of the potential impacts of cogeneration on agency workloads in California. These impacts are more difficult to quantify because data on air and water permit applications are tabulated on a regional or district basis, and statewide totals were not available. Table 59 is based on data from selected California air and water quality districts that tend to be representative of the potential statewide agency impact, but the table does not include the impact of the 1981 legislation (mentioned previously) that shifts the burden of attaining offsets under the nonattainment area provisions of the Clean Air Act to the local APCDS.

Table 59 shows that the projected number of air and water permit applications for cogenerators and the subsequent enforcement cases is greater in California than in Colorado due to the larger assumed penetration of cogeneration in California. However, California agencies tend to have more staff and other resources and thus the overall workload impact can be expected to be roughly similar. But, several of the California environmental agencies already are overextended and even a minor increase in the workload or reduction in staff may be difficult to accommodate under present conditions.

Table 59.—increase In Agency Workloads Due to the Deployment of Cogeneration Technologies in Caiifomia

Agency	Current staff	Current case load	Projected average increases in cases per year			
			1981-85	1986-90	1991-95	1996-2000
1. California Air Quality Division						
State-wide total	1,000+	NA	20	17	37	41
Sacramento District:						
1. New Source Review	2	175	1	1		1
2. Inspections	3	900	3	6	9	12
II. Water Resources Control Board						
State-wide total	NA	NA	5	4	9	10
Region 5—Sacramento:						
1. Waste Discharge Requirement[a]	20	150				2
2.inspections	—	1,500	3	6	9	12
Region 9—San Diego:						
1. Waste Discharge Requirement[a]	2	8	1		2	2
2. Inspections	17	1,000	3	6	12	18
III. Army Corps of Engineers						
Los Angeles District:						
404 applications	11	120	3	2	5	6
IV. State Lands Commission						
(rights-of-way)	100	450	5	4	9	10
V. BLM State Office						
(rights-of-way)	15	150	5	4	9	10
VI. Fish and Game Department						
(consultations)	35	10,000	10	9	19	20
VII. Office of Historic Preservations						
(consultations)	4	20	10	9	19	20

NA - Not available.

aThis encompassed both the 401 and NPDES permit programs.

SOURCE: Energy and Resource Consultants, Inc., *Federal and* State *Environmental Permitting and Safety Regulations for Dispersed Electric Generation Technologies* (contractor report to the Offlce of Technology Assessment, 1980).

Summary

The data in this discussion show that, in most cases, the deployment of cogeneration should only increase State and Federal agency caseloads by a small percentage. The resulting increases in staff workloads vary depending on present load and resources. But many of the agencies currently are understaffed and not able to handle their present caseload. Thus, even small percentage increases in workload would represent a substantial burden for these agencies. Moreover, under current policies designed to reduce Federal agency budgets and staff resources and turn over more of the responsibility for permitting, monitoring, and enforcement to already understaffed State agencies, the impact of cogeneration may be more significant than suggested by these data. If this is the case, then cogeneration projects could be delayed in the permitting process, or could be reviewed inadequately resulting in insufficient controls and enforcement, and therefore a greater potential for adverse environmental impacts.

ECONOMIC AND SOCIAL IMPLICATIONS

Cogeneration (and other onsite generating technologies) has attracted widespread attention not only for its potential benefits and costs for energy efficiency, the environment, and utility planning and operations, but also for its possible implications for the economic and political institutions traditionally involved in the supply and demand of electric and thermal energy. Many analysts feel that, as global stocks of oil and natural gas dwindle, major changes must occur in the technical, economic, and institutional context for energy supply and demand in industrial-

ized societies. Cogeneration and small power production are likely to be a part of these energy system changes. Moreover, many people advocate the use of dispersed generating technologies not solely because of the perceived technical, economic, or environmental advantages, but also due to the belief that an energy system based on these technologies will be more compatible with traditional democratic, participatory, and pluralistic institutions than a strategy based on continued reliance on large-scale centralized technologies. Although a thorough assessment of these implications is beyond the scope of this report, some general considerations are discussed below.

In general, there are two ways in which technological change can be associated with social or political change: 1) a change in the number, type, or responsibilities of organizations associated with the production, distribution, and/or operation of a technological system; and 2) the more general benefits and costs for individuals, groups, and society as a whole. In the context of cogeneration, the first type of change relates primarily to those institutions described in chapter 3–the traditional suppliers, users, and regulators of electric energy, while the second set of impacts concerns the likelihood of cogeneration's resulting in greater centralization or decentralization in social organization.

The general background for an analysis of the social and political implications of cogeneration is described in chapter 3, including the national energy context, the current status of the electric utility industry, and the regulatory and institutional aspects of cogeneration. Clearly a fundamental feature of the electric utility industry-its ability to provide a reliable supply of electricity at a relatively low price while maintaining its financial health–has changed dramatically in recent years. Virtually all aspects of the technological and institutional context of the industry have contributed to this change: capital and fuel cost increases and environmental concerns have limited the choice of generating technologies and operating conditions, and have increased the price of electricity significantly. At the same time, the rate of demand growth has declined substantially, resulting in excess utility capacity in many areas, which has contributed to utilities' financial problems. As a result of these recent changes in the status of electric utilities, the industry and its customers and regulators have sought alternate means of achieving the goal of reliable service at a low price. One such means is through small-scale generating technologies such as cogeneration.

The widespread use of cogeneration could bring a wide array of changes to the context described in chapter 3. In general, these changes can affect the roles, responsibilities, or authority of energy suppliers or consumers and the relationships among them. Thus, with cogeneration, the traditional roles of utilities—as suppliers of electricity—and their customers would have *to* be recast as former customers feed cogenerated power into the grid, and thus become suppliers of electricity themselves. Alternatively, electric utilities could own dispersed cogeneration capacity and establish **a** new role for the industry as providing alternative energy supply options (and, in most cases, a new product–thermal energy) rather than merely facilitating the development of those options by other parties.

This section focuses on the economic and social implications of cogeneration for utilities and their customers. It begins with an analysis of the potential capital cost and employment impacts of three scenarios for cogeneration market penetration, discusses the effects of the scenario results on utilities' planning and operation, and then briefly outlines some potential impacts in other economic sectors. The section concludes with a review of cogeneration's implications for the centralization or decentralization of electricity generation.

Economic Impacts

Due to the large number of uncertainties about future energy development patterns, it is extremely difficult to develop a quantitative—or even qualitative—basis for comparing the economic characteristics of these different development scenarios. For example, the rate of growth in electricity demand, the rate of inflation, future capital costs for powerplant construction, and changes in the **regulatory climate all may affect the future**

costs and deployment characteristics (e.g., plant size) of utility generating capacity. Similarly, uncertainties about ownership, future capital costs, and the choice of technologies make it difficult to project the economic effects of the widespread use of cogeneration. Furthermore, due to the lack of recent cogeneration experience, reliable data are not available for items such as the operating and maintenance (O&M) labor required for cogenerators. Without a large computer modeling effort, clearly beyond the scope of this assessment, it is not possible to determine the sensitivity of the economic impacts of cogeneration development to these uncertainties.

However, OTA wanted to be able to define the problem areas in order to lay the groundwork for future impact assessments. Therefore, OTA developed three rough market penetration estimates for cogeneration. The assumptions underlying these rough estimates and their derivation are reviewed briefly, and then the ranges of impacts that could be associated with each estimate are discussed.

Market Penetration Scenarios

A wide range of penetration estimates are available in the literature on cogeneration and are displayed in table 60. The highest estimate shown in the table—which represents 10 to 16 percent of total projected electricity generation capacity in the year 2000-is around 70 times larger than the smallest. To bracket the ranges of penetration estimates, OTA chose three estimates. The first, a penetration of 50,000 MW by 2000, is an approximation of the Economic Regulatory Administration's high estimate for the maximum oil/gas electric generating capacity potentially displaced by cogeneration. The implementation of 50,000 MW of cogeneration would represent approximately 5 to 8 percent of total projected installed generating capacity in 2000. Second, as the middle range, OTA chose the high number in table 60—approximately 100,000 MW of cogeneration–which would represent 10 to 16 percent of potential installed generating capacity in 2000. Finally, in order to gauge the impacts of phenomenal success, OTA postulated a penetration of 150,000 MW **by 2000, which** would be 16 to 24 percent of total projected installed capacity.

Table 60.-Market Penetration Estimates for Cogeneration

Source	MW	Qualifications
FERC	5,910	Estimate of the marginal increase in cogeneration capacity caused by PURPA by 1995.
FERC	27,405	Estimate of the potential for cogeneration capacity in 1995.
ERA	1,312	Amount initially allowed under FUA regulations.
ERA	3,920	Likely cogeneration penetration by 1990.
ERA	45,190	Maximum oil/gas-fired generating capacity potentially displaceable by cogeneration.
SERI	93,000	Amount of central station baseload capacity potentially displaceable by cogeneration.

KEY: FERC—Federal Energy Regulatory Commission; ERA—Economic Regulatory Administration; and SERI—Solar Energy Research Institute.
SOURCE: Office of Technology Assessment.

Once these three penetration estimates were established, it was necessary to disaggregate for the types of utility generating capacity that would be backed out by cogeneration and in what parts of the country. In order to do this it was assumed that:

- 30 percent of existing oil-fired steam generating capacity would be converted to coal or permanently retired;
- oil-fired steam plants would be backed out before gas-fired steam plants;
- only oil- and gas-fueled capacity would be backed out (i.e., no coal, nuclear, hydro, or other non-oil/gas capacity is replaced by cogeneration);
- steam plants would be backed out before combustion turbines;
- oil-fired combustion turbines would be backed out before gas-fired combustion turbines; and
- no utility region would replace **all** its combustion turbine capacity with cogeneration, for reliability reasons.

Based on these considerations, three scenarios were derived from the following assumptions:

1. *50,000 MW penetration by 2000:*
   - 30 percent of the 1981 oil steam capacity would be converted to coal or retired

by 2000 and would not be available for replacement by cogeneration;
- of the remaining 70 percent of oil steam capacity, approximately 40 percent would be replaced by cogeneration;
- approximately 40 percent of the gas steam capacity would be replaced by cogeneration; and
- approximately 1 percent of the oil-fired combustion turbine capacity would be backed out by cogeneration.

2. ***100,000 MW penetration by 2000:***
   - ***30*** percent of oil steam would be converted or retired, and 75 percent of the remainder would become cogeneration;
   - . 75 percent of the gas steam capacity would be backed out;
   - . 18 percent of the oil combustion turbine capacity would be replaced by cogeneration; and
   - . 11 percent of the gas combustion turbine capacity would be replaced by cogeneration.
3. 150,000 ***MW penetration by 2000:***
   - 30 percent of the oil steam capacity would be converted or retired, and 100 percent of the remaining oil steam would become cogeneration;
   - 100 percent of the steam gas capacity would be backed out by cogeneration;
   - 70 percent of the oil combustion turbine capacity would be replaced by cogeneration; and
   - 30 percent of the gas combustion turbine capacity would become cogeneration.

These assumptions were applied to the nine North American Electric Reliability Council regions based on 1981 regional oil and gas steam and combustion turbine capacity (i.e., the analysis assumes no new oil/gas capacity will be brought on-line after 1981, regardless of utility announced plans). Thus, these penetration estimates do no necessarily correspond to the regional cogeneration opportunities that have been identified in the literature. This is simultaneously a result of the linear approach to the analysis and a desire to gauge the impacts of overwhelming success for cogeneration policy and financial incentives. The results of this exercise are shown in detail in table 61.

Financial and Employment impacts

It has been claimed widely that investment in smaller capacity increments, such as cogeneration systems, would contribute to the improved financial health of the electric utility industry. Therefore, OTA undertook a comparison of the **capital costs** of the scenarios in table 61 with and without cogeneration. For the base case—utility development of 50,000, 100,000, and 150,000 MW of capacity without cogeneration—two sets of assumptions were used (see table 62). The first (Case A) uses coal-fired plants with scrubbers to meet all the baseload capacity requirements. The capital cost for baseload coal was set at $1,014/kW (1980 dollars), the same figure used in modeling commercial cogeneration opportunities (see ch. 5). In the second base case (Case B), 50 percent of the baseload capacity was assumed to be coal-fired (at $1,01 4/kW) and the other 50 percent assumed to be nuclear powered (at $1,400/-kW, the average cost, including interest during construction, for those plants that came on-line in 1979-80) (30). In both base cases, peaking

Table 61.—Scenarios for Cogeneration Implementation

	50,000 MW					100,000 MW						150,000 MW					
	Steam oil	Steam gas	CT oil	CT gas	Total	Steam oil	Steam gee	CT oit	CT gas	Total	Steam 0il	Steam gas	CT Oil	CT gas	Total
ECAR	1,190	60	21	–	1,271	2,170	120	360	115	2,765	2,66S	157	1,478	306	4,629
ERCOT	–	12,400	1	–	12,401	–	23,260	10	150	23,420	–	31,010	40	398	31,448
MAAC	3,350	–	72	–	3,422	0,300	—	1,300		7,625	8,366	–	5,054	68	13,510
MAIN	1,210	200	18	–	1,428	2,275	390	320	125	3,110	3,033	514	1,245	329	5,121
MARCA	150	65	31	–	266	285	160	565	10	1,020	376	213	2,196	21	2,806
NPCC	7,210	10	47	—	7,267	13,526	20650		5	14,401	18,035	26	3,309		21,379
SERC	5,260	70	103	–	5,433	9,665	140	1,630	12	11,647	13,150	184	7,122	33	20,489
SPP	2,050	2,870	15	–	10,935	3,650	16,635	265	120	20,870	5,130	22,179	1,031	322	28,662
WSCCc	6,540	1,000	37	–	7,577	12,271	1,875	675	101	14,992	16,362	2,499	2,623	272	21,756
NERC–U.S. totals	26,960	22,695	345	–	50,000	50,542	42,600	6,195	663	100,OOO	67,362	56,782	24,098	1,758	150,000

CT - combustion turbine.

SOURCE: Office of Technology Assessment.

98-946 O - 83 - 17 : QL 3

Table 62.—Assumptions Used to Compare Capitai Costs

Technology type	Capital cost ($/kW)	Amount installed (MW)					
		50,000 MW		100,000 MW		150,000 MW	
		Case A	Case B	Case A	Case B	Case A	Case B
Baseload:							
Coal-fired	$1,014	45,655	22,827.5	93,142	46,571	124,144	62,072
Nuclear	1,400	0	22,827.5	0	46,571		62,072
Peakload	200	345	345	6,858	6,858	25,85:	25,856
		Case C	Case D	Case C	Case D	Case C	Case D
Diesels	$350-800	12,500	2,500	25,000	5,000	37,500	7,500
Gas turbines	320-900	12,500	7,500	25,000	15,000	37,500	*22,500*
Steam turbines	550-1,600	12,500	17,500	25,000	35,000	37,500	*52,500*
Combined cycle	$430-600	12.500	22.500	25.000	45.000	37.500	*67,500*

SOURCE: Office of Technology Assessment.

capacity was assumed to have a capital cost of $200/kW, the same figure used in the analysis in chapter 5.

Additional assumptions were needed to develop a capital cost comparison for meeting these capacity requirements **with** cogeneration. First, a mix of cogeneration technologies was established by selecting four mature systems–diesels, combustion turbines, steam turbines, and combined cycles–that represent a wide range of possible cogeneration applications, and then choosing two sets of penetration mixes for the four systems (see table 62). The first set (Case C) assumes that each of the technologies would contribute 25 percent of the capacity requirements. The second set (Case D) assumes that diesels would contribute 5 percent, combustion turbines 15 percent, steam turbines 35 percent, and combined cycles 45 percent. Capital costs for these four technologies vary widely depending on the size of the system, the fuel used, and the industrial or commercial application. Therefore, the full range of costs given in chapter 4 was used (see table ***18).***

Table 63 shows the capital investment needs for meeting the three capacity scenarios based on these assumptions. As can be seen in table 63, the assumptions used in estimating capital costs play a substantial role in determining the impact of substituting cogeneration for central station capacity. For example, in the 50,000 MW scenario, the central station capital requirements are as much as 90 percent higher than those for lower cost cogenerators, and up to 17 percent **lower** than those for higher cost cogenerators. Similarly, the mix of technologies affects the cost comparison, with Cases A and C having significantly lower capital requirements than Cases B and D. Equally wide ranges of results are shown for the 100,000 and 150,000 MW scenarios. However, if the **mean** of the cogenerator case costs is compared to the central station costs, the cogeneration cases require around 20 to 40 percent less capital than the central station cases.

Still greater uncertainties are introduced into the capital cost comparison if one factors in interest costs and construction duration. The cost of capital is heavily dependent on its source, including whether a project is financed through debt, equity, or internal funds; the source of debt or type of equity; and the interest rates and rate of return on equity. If one assumes that all factors except construction duration are equal, then the cost of capital obviously would be lower for smaller capacity increments such as cogeneration than for large central station plants. However, high interest rates mean that the shorter leadtime for cogenerators offers substantial short-term financing advantages over central station powerplants.

In addition to examining capital cost differences, OTA also estimated differences in O&M costs for equal amounts of central station and cogeneration capacity. The same capacity assumptions as in the capital cost estimates were used (see table 62), but additional assumptions had to be made with regard to O&M costs and capacity factors (see table 64). The results of the O&M cost comparison are shown in table 65. As can be seen in table 65, O&M costs show the

Table 63.—Comparison of Capitai Requirements (1980 dollars x 10°)

Without cogeneration				With cogeneratlon			Percent difference			
Technology	Case A	Case B	Percent difference A-B	Technology	Case C	Case D	Percent difference C-D	A-C	A-D	B-C	B-D
50,000 MW:				*50,000 MW*							
Baseload	46,294	54,106		Diesels	4,375-10,000	*875-2,000*					
Peakload	69	69		Gas turbines	4,000-11,250	*2,400-6,750*					
Total	46,363	54,175	15.5	Steam turbines	6,875-20,000	*9,625-28,000*					
				Combined cycle	5,375-10,000	*9,675-18,000*					
				Lowest total	20,625	*22,575*	*9*	*76.8*	*69.0*	*90.0*	*82.3*
				Highest total	51,250	*54,750*	*6.6*	**–10.0**	–16.6	5.5	–1.1
				Mean	35,938	38,663	7.3	25.3	18.1	40.5	33.4
100,000 MW:				100,000 MW:							
Baseload	94,446	112,422		Diesels	8,750-20,000	1,750-4,000					
Peakload	1,372	1,372		Gas turbines	8,000-22,500	4,600-13,500					
Total	95,818	113,794	17.2	Steam turbines	13,750-40,000	19,250-56,000					
				Combined cycle	10,750-20,000	19,350-36,000					
				Lowest total	41,250	45,150	9	79.6	71.9	93.6	66.4
				Highest total	102,500	109,500	6.6	–6.7	–13.3	10.4	3.8
				Mean	71,875	77,325	7.3	28.6	21.4	45.2	38.2
150,000 Mw:				150,000 MW:							
Baseload	125,680	149,642		Diesels	13,125-30,000	2,625-6,000					
Peakload	5,171	5,171		Gas turbines	12,000-33,750	7,200-20,250					
Total	131,051	155,013	16.8	Steam turbines	20,62540,000	28,875-64,000					
				Combined cycle	16,125-30,000	29,025-54,000					
				Lowest total	61,875	67,725		71.7	63.7	65.9	78.4
				Highest total	153,750	164,250	6°6	–15.9	–22.5	0.8	–5.8
				Mean	107.813	115.988	7.3	19.5	12.2	35.9	28.8

aA negative percent difference means that cogeneratlon coats are higher, and a positive percent difference Indlcates that central station costs are higher.

SOURCE: Office of Technology Assessment.

Table 64.—Assumptions Used in Estimating Operating and Maintenance Costs

Type of equipment	Size (MW)	Capacity factor	Annual fixed O&M cost ($/kw)	Variable O&M cost (mills/kWh)	Consumable O&M cost (mills/kWh)
Central station:					
Coal steam	1,000	75%	12.9	0.90	2.6
Light water reactor	1,000	75%	3.1	1.50	—
Combustion turbine	75	9%	0.275	2.925	—
Cogeneration:					
Steam turbine	0.5-100	90%/45%	1.6-11.5	3.0-8.8	—
Gas turbine	0.1-100	90%/45%	0.29-0.34	2.5-3.0	—
Combined cycle	4-100	90%/45%	5.0-5.5	3.0-5.1	
Diesel	.0.075-30	90%/45%	6.0-8.0	5.0-10.0	–

SOURCE: Off Ice of Technology Assessment.

same wide variation as capital costs, depending on the mix of equipment types, sizes, and capacity factors. In general, however, the figures in table 65 suggest that O&M costs for cogeneration will be **lower** than those for central station capacity when the cogenerators are larger units suitable for industrial sites (i.e., steam turbines, combined cycles), or when they are operating at a lower capacity factor. Conversely, small cogenerators **with a higher proportion of diesels and gas turbines, and those operating at a higher capacity** factor, tend to have **higher** O&M costs than central station capacity.

The labor requirements for construction and for O&M of equivalent amounts of central station and cogeneration capacity also were compared. This was extremely difficult due to a lack of consistent data. For example, estimated construction work-hour requirements by craft and **region are** available for central station capacity, but not for cogeneration. On the other hand, construction

Table 65.—Comparison of operating and Maintenance Costs (1978 dollars x 1O[a])

Without Cogeneration			With cogeneration						Percent differences							
Equipment	Case A	Case B	Percent difference A-B	Equipment	Case C90	Case D90	Percent difference C90-D90	Case C45	Case D45	Percent difference C45-D45	A-C90	A-D90	B-C90	B-D90	A-C45	A-D45	B-C45	B-D45
50,000 MW:				50,000 MW:														
Baseload	16.388	11.151		Diesels	5.67&10.655	1.136-2.171		3.214-5.83	0.643-1.IW									
Peakload	0.009	0.009		Gas turbines . . .	2.5-3.0	1.5-1.8		1.266-1.521	0.761-0.912									
Total	16.397	11.180	36.0	Steam turbines .	3.156-10 .11	4.419-14.154		1.6705.774	2.350-8.063									
				Combined cycle	3.58-5.714	6.447-10.285		2.103-3.2	3.786-5.761									
				Lowest total .	14.914	13.502	9.9	8.263	7.54	9.2	9.5	19.4	−28.8	−19.0	*88.0*	*74.0*	*29.8*	*36.7*
				Highest total .	29.679	28.410	4.4	16.425	15.942	3.0	−57.7	−53.6	−90.7	−87.2	*−0.2*	*2.8*	*−36.2*	*−35.3*
				Mean.	22.297	20.958	6.2	12.344	11.741	5.0	−30.5	−24.4	−88.6	−61.0	*28.2*	33.1	−10.7	−5.1
100,000 Mw:				100,000 MW:														
Baseload	33.434	22.750		Diesels	11.36-21 .71	2.27434		6.43-11.88	1.266-2.37									
Peakload	0.179	0.179		Gas turbines . . .	5.0-6.0	3.0-3.6		2.54-3.04	1.522-1.825									
Total	33.613	22.929	37.8	Steam turbines .	6.313-20.22	8.636.28.31		3.36-11.55	4.7-16.185									
				Combined cycle	7.163-11.425	12.89-20.57		4.2-6.4	7.57-11.52									
				Lowest total .	29.838	28.996	9.9	16.530	15.078	9.2	11.9	21.8	−26.2	−16.3	88.1	76.1	32.4	41.3
				Highest total .	59.355	58.820	4.4	32.850	31.860	3.0	−55.4	−51.3	−88.5	−85.0	2.3	5.3	−35.6	−32.7
				Mean.	44.596	41.909	6.2	24.690	23.479	5.0	−28.1	−22.0	−64.2	−58.5	30.6	35.5	−7.4	−2.4
150,000 MW:				*150,000 MW:*														
Baseload	44.582	30.322		Diesels 17.03-32.6		3.414.513		9.64-17.78	1.93-3.58									
Peakload	0.676	0.676		Gas turbines . . .	7.5-9.0	4.5-5.4		3.6-4.%	2.28-2.74									
Total	45.236	30.996	37.4	Steam turbines .	9.47-30.33	13.26-42.46		5.035-17.32	7.05-24.25									
				Combined cycle	10.7$17.14	19.34-30.85		6.31-9.6	11.36-17.28									
				Lowest total .	44.750	40.510	9.9	24.785	22.620	9.2	1.1	11.0	−36.3	−28.6	58.4	88.7	22.3	31.3
				Highest total .	89.070	85.223	4.4	49.260	47.630	3.0	−85.3	−61.3	−96.7	−93.3	−8.5	−5.6	−45.5	−42.7
				Mean.	66.910	62.887	6.2	37.023	35.225	5.0	−36.6	−32.6	−73.4	−67.9	20.0	24.9	−17.7	−12.8

aA negative percent difference means that cogeneration costs are higher, and a positive percent difference indicates that central~ station costs are higher.

SOURCE: Office of Technology Assessment.

labor costs are available for cogenerators, but usually are not broken out in surveys of central station installation costs. Moreover, labor requirements and costs for central station capacity vary widely by region and type and size of capacity.

However, in order to derive broad estimates for comparison purposes, the available data were applied to the three scenarios described above based on the capital and O&M cost estimates in tables 63 and 65. To estimate cogeneration construction labor requirements in work-hours, OTA used existing estimates of labor costs and divided by the 1979 average cost per work-hour for construction labor. The results were then compared to existing estimates of work-hour requirements for central station powerplants (see table 66).

As with the cost estimates in tables 63 and 65, the **construction labor requirements** in table 66 vary widely due to the wide range in the underlying assumptions. For example, for the 50,000 MW scenario, cogeneration is shown as requiring from 40 percent fewer to as much as 70 percent more work-hours than central station plants, depending on the size, type, and location of the central station capacity, and the size and type of cogenerators. Similar wide ranges are shown for the ***100,000*** and 150,000 MW scenarios. In general, construction labor needs for cogeneration are **higher** than those for an eqivalent amount of central station capacity when small-to medium-sized cogeneration units are installed, and lower when large cogenerators are used.

Although it is not possible to project actual construction labor needs without additional information on the size and type of cogeneration capacity to be used, it is possible to qualitatively compare the types of jobs that might result. Powerplant construction labor may be broken down into approximately 15 different craft requirements (see table 67). Not all of the skills listed in table 67 would be needed for cogeneration installation, nor would the proportion of each craft be similar (although actual craft needs for installing cogeneration have not been published).

The location and duration of labor needs also will be quite different for cogeneration and central powerplants. Central station capacity construction is likely to occur in larger capacity increments at relatively isolated rural sites, and to

Table 66.–Comparison of Construction Labor Requirements (WH x 10^6)

Without cogeneration				With cogeneration				Percent difference[a]			
Technology	Case A	Case B	Percent difference A-B	Technology	case c	Case D	Percent difference C-D	A-C	A-D	B-C	B-D
50,000 MW:				50,000 MW							
Baseload.	389.8-452.0	*497.6-646.0*		Diesels	72.92-186.67	14.58.33.33					
Peakload.	0.88-1.24	*0.88-1.24*		Gee turbines	46.15-129.81	27.69-77.89					
Lowest total. . .	370.88	*498.48*	*29.4*	Steam turbines	132.21484.62	185.05-537.96					
Highest total . .	453.24	*847.24*	*35.3*	Combined cycle , . . .	82.69-153.85	148.85-276.95					
Mean	411.98	*572.88*	*32.7*	Lowest total	333.97	378.17	11.9	10.4	1.5	39.5	28.0
				Highest total	834.96	926.13	*10.4*	–59.3	–68,6	–25.3	–35.5
				Mean.	584.48	661.15	*10.8*	-34.6	–45.0	–2.0	–12.8
100,000 MW:				100,000 MW:							
Baseload.	754.45-922.1	1,015 .2-1,318.0		Dlesels	145.84-333 .34	29.18-86.67					
Peakload.	17.59-24.63	17.59-24.63		Gas turbines	92.30259.82	55.38-155.78					
Lowest total . .	772.04	1,032.79	*28.9*	Steam turbines	264.42-789.24	370.1-1,075.92					
Highest total .	946.73	1,342.63	*34.6*	Combined cycle	185.38-307.70	297.7-553.9					
Mean	859.39	1,187.7	*32.1*	Lowest total	887.94	752.34	11.9	14.5	2.6	42.9	31.4
				Highest total	1,689.90	1,852,3	10.4	–55.3	–64.7	–21.7	–31.9
				Mean	1,188.9	1,302.3	10.8	–30.5	–41.0	1.6	–9.2
150,000 MW:				150,000 MW:							
Baseload, ...	1)005 .6-1,229.0	1,353 .2-1,758.5		Diesels	218.76-500.01	43.74-100.00					
Peakload.	88.3-92.8	66.3-92.8		Gas turbines	138.45389.43	83.07-233.67					
Lowest total. .	1,071.9	1,419.5	*27.9*	Steam turbines	396.63-1,153.86	555.15-1,613.88					
Highest total	1,321.8	1,849.3	*33.3*	Combined cycle	248.07-481 .55	446.55-830.85					
Mean	1,196.9	1,634.4	*30.9*	Lowest total	1,001.9	1,128.5	11,9	6.8	–5.1	34.5	22.8
				Highest total	2,504.9	*2,778.4*	10.4	-61.8	–71.1	-30.1	-40.2
				Mean	1,753.4	*1,953.5*	10.8	-37.7	–48.0	–7.0	–17.8

a A negative percent difference means that cogeneration labor requirements are higher, and a posltve percent difference Indicates that central station labor requirements are higher.

SOURCE: Office of Technology Assessment.

98-946 O - 83 - 18 : QL 3

Table 67.—Craft Requirements for Central Station Powerplant Construction

Craft	Percent of total construction labor	
	Nuclear	Fossil
Asbestos workers/insulation. .	1.6	3.5
Boilermakers	3.3	15.0
Bricklayers/stone masons	0.4	0.5
Carpenters	11.1	8.5
Cement/concrete finishers . . .	1.4	1.1
Electricians	16.3	14.3
Ironworkers	7.7	9.0
Laborers	15.0	11.8
Millwrights	2.4	2.9
Operating engineers.	6.2	7.6
Painters	2.5	1.5
Pipefitters	26.5	18.6
Sheet metalworkers	1.5	2.0
Truck drivers		3.2
Other workers	0.5	0.4

SOURCE: U.S. Department of Energy, Off Ice of Energy Research; and U.S. Department of Labor, Employment Standards Administration, *Projections of Cost Duratlon, and On-Site Manual Labor Requirements for Constructing Electric Generating Plants, 197~19&3 DOE/IFf-O 057 and DOUCLDS/PP2,* September 1979.

entail large influxes of workers (either temporary residents or commuters) for several years. **The social and economic disruption that can result from powerplant construction is well** documented in the literature. Cogenerators, on the other hand, are more likely to be installed at commercial or industrial sites, usually located near population centers. Moreover, because cogeneration would be installed in smaller capacity increments, fewer workers would be required for each installation. Although the installation jobs would be of much shorter duration, they would occur more frequently, providing a steadier **regional employment profile. Thus, the potential** for adverse socioeconomic impacts **would be much lower with cogeneration.**

Estimated requirements for O&M **labor** are compared in table 68. These were not translated into the three scenarios due to the large number of uncertainties and gaps in the data. However, it is clear from table 68 that the labor requirements for cogeneration per megawatthour of output will be greater than those for central station capacity. How much greater will depend on the size, type, and operating characteristics of the cogenerator. The crafts involved (engineering, fuel handling, general labor) are likely to be similar for cogeneration and coal-fired powerplants, but, as with construction labor, the location of the jobs will be very different.

Table 68.—Estimated Operating and Maintenance Labor

Capacity type	Size (MW)	WH/MWh
Central station.[a]		
Nuclear	1,000-2,000	0.0389-0.0761
Coal	1,000-2,000	0.0462-0.0793
Diesel[C ogeneration: b]		
. . . . .	*0.24*	27.8-55.6
	0.7	9.5-19.0
	1.135	5.9-11.7
	2.84	2.1-4.7
Gas turbine[b].	0.5	12.6-26.7
	10.0	0.63-1.3
	50.0	0.13-0.27
Steam turbine[c].	15-30	1.114-1.968
	45-70	0.378-0.464
	140-190	0.136-0.159

[a]Derived from actual operating experience of plants responding to *Electrical World's* 21st Steam Station Cost Survey (Nov. 15, 1979), assuming that each employee works an 8 hour shift 260 days/year.
[b]Derived from Acres American, Inc., *A Report on Cogeneration Plant Costs and Performance* (report prepared for The Cogeneration Task Force of the New York Power Pool, February 1978). The range given is for a 90 percent and a 45 percent capacity factor.
[c]Based on actual operating experience of cogenerators reported in Electric Power Research Institute, *Industrial Cogeneration Case Studies,* EPRI EM-1531, September 1980.

SOURCE: Office of Technology Assessment.

The above comparisons of capital and O&M costs and labor requirements for equivalent amounts of central station and cogeneration capacity indicate that cogeneration has the potential to reduce the cost of supplying electric power while increasing the number of jobs associated with electricity generation. * However, depending on the size and type of cogenerators deployed, it could have the opposite effect-higher capital costs and/or lower labor requirements. That is, the financial and employment effects of cogeneration are highly correlated with economies of scale. Based on the mean values, however, it is more likely that cogeneration costs will be lower and labor needs higher than those for central station powerplants.

Utility Planning and Regulation

Where utilities face financial, fuel availability, or other constraints on capacity additions, or where they are heavily dependent on oil-fired capacity that cannot be converted to coal, co-

***Note that this seemingly anomalous result is possible only if cogeneration installation and operation/maintenance require less skilled (and thus lower paid) labor than central station plants, which is likely to be the case.**

generation can benefit utility finance, planning, and operations. If utilities own cogeneration capacity, the potentially lower capital costs—together with the lower cost of capital that results from short construction leadtimes and smaller capacity increments—will mean lower shortrun costs to be passed on to their customers. Other financial characteristics also would be likely to improve, including utilities' ability to finance projects internally and the amount of Allowance for Funds Used During Construction (AFUDC) (or Construction Work In Progress–CWIP) and deferred taxes they carry on their books. All of these factors would tend to slow the rate of growth in retail electricity rates as well as make utilities more attractive to investors.

The short construction leadtimes and small unit size of cogenerators also can have important benefits for utility planning and operations. If the demand for electricity increases more rapidly than utility planners project, smaller plants can be brought on-line more quickly (i.e., a 2- to 3-year leadtime for cogenerators compared to an 8-to 10-year leadtime for baseload coal plants and 10 to 12 years for nuclear plants). Similarly, if demand grows more slowly than expected, smaller capacity increments can be deferred more easily and inexpensively than large powerplants for which planning and construction must begin years before the power is projected to be needed. In addition, small unit sizes will have lower outage costs (less unserved energy) than larger units, assuming that both sizes present approximately the same degree of reliability.

The potential for all of these benefits would be enhanced if utilities were allowed to own a 100 percent interest in cogeneration capacity and still receive unregulated avoided cost rates under PURPA. That is, their qualifying cogeneration capacity would be unregulated and the cogenerated power could be valued at the avoided cost rather than the average cost. Thus, the utility could earn a higher rate of return on it than on their regulated generating capacity. This higher return would compensate them more fully for the perceived risks of investment in "unconventional" technologies with relatively uncertain operating characteristics, but probably would still be lower than the rate of return required by industrial or commercial owners. Similarly, the higher return would increase the cost that would have to be passed on to customers, but that cost might still be lower than under nonutility ownership.

Utilities with long-term contracts for purchases of cogenerated power could still use the smaller capacity increments to reduce the downside risk of sudden unexpected changes in demand growth. outage costs also would probably remain relatively equal under either form of ownership, although utilities may consider cogenerators they own to be more reliable due to perceived or actual differences in dispatchability and other factors affecting reliability. But these considerations are tempered by the probability that cogeneration would supply more electricity to the grid under utility ownership. Utilities typically require a lower rate of return—even when unregulated—than private investors, and financially healthy utilities often have access to lower cost capital. Thus, cogeneration investments maybe economic for utilities when they would not be for users or third parties. Furthermore, except where avoided costs are very high, utilities would be more likely to invest in cogeneration systems with a high ratio of electricity-to-steam production (E/S ratio).

For nonutility ownership, the benefits from cogeneration's potentially lower power production costs would accrue to the cogenerator rather than to the utility or its customers. Under the original FERC rules implementing PURPA, the cogenerator would be paid for power supplied to the grid based on the utility's avoided cost of alternative energy (or marginal cost), rather than on the average energy cost (see ch. 3). This higher cost would be passed on to the utility's noncogenerating customers. Moreover, the utility would have administrative and other expenses related to capacity that were not included in its rate base and on which it would not earn a rate of return.

Finally, utilities may be subject to planning and financial risks from the increased competition posed by nonutility-owned cogenerators. When competition takes away utility customers, the joint or common costs get a reduced revenue contribution. This reduction in fixed cost

coverage either endangers **service to other customers or imposes a greater share of the cost burden on them. This phenomenon is not unique to electric power. It has occurred in the transportation industry, most dramatically with the competition between trucking and railroads, and the same problems currently are being faced by the telecommunications industry. It is essentially the same as the issue of loss exposure raised by Con-Ed** in the New York Public Service Commission hearings on cogeneration (see ch. 3). Remedies for such problems, insofar as they exist, must be found in the rate structure of the utility, or through changes in Federal policy that would equalize utilities' competitive position in cogeneration markets.

The following material analyzes the potential effects of competition on two utilities: Commonwealth Edison (CWE), which is committed to major central station capacity construction, and Pacific Gas & Electric (PG&E), which is constrained from adding large amounts of new central station capacity and has been ordered by the California Public Utilities Commission to aggressively seek cogeneration capacity. Background information on the implementation of PURPA in these utilities' service areas may be found in chapter 3.

Current cost conditions in the electric power industry can give rise to reduced fixed cost coverage. These are illustrated for CWE in figure 61, which shows the average fixed cost portion of CWE **revenue requirements, based on their current construction plans,** for growth rates of 4, 2, and O percent (CWE projects **4 percent load growth).** Any load growth lower than 4 percent–whether it is due to competition from onsite generation or from conservation-will result in sales below CWE expectations and thus a rising burden of fixed costs for remaining customers. As shown in figure 61, the larger the shortfall in sales, the faster the fixed cost burden rises.

Turning to the California context, it is more readily apparent that PURPA payments to cogenerators can lead directly to reduced fixed cost coverage. PURPA payments for capacity are **fixed** costs **from the ratepayers' point** of view, even if their basis in value comes from fuel savings.

Figure 61 .—CWE Fixed Cost Structure as a Function of Sales Growth

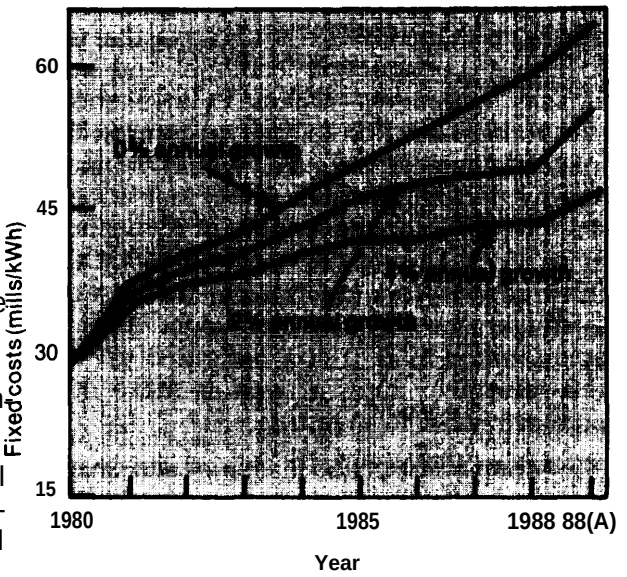

SOURCE: Edward Kahn and Mlchael Merritt, *Dispersed* ***Electricity Generation: Planning and Regulation*** (contractor report to OTA, February 1981).

When a utility contracts to purchase energy from a private party, on an avoided cost basis, the PURPA payments should drop with decreasing demand. However, this may not be the case, or at least not to any significant degree. To demonstrate this proposition, the cost structure of PG&E is illustrated in table 69.

The differences between the base case and the PURPA case in table 69 are due to two factors. First, there is more than twice as much cogeneration in the PURPA case compared to the base case (940 MW v. 2,000 MW). The larger amount of cogeneration represents a fulfillment of the goal set for PG&E by the California public Utilities Commission. The second difference is that the

Table 69.—Pacific Gas & Electric Cost Structure Adjusted for PURPA, 1990

	Base case	PURPA case
Fixed costs	$5.31 x 10^9	$8.58 x 10^9
Fuel	$5.22 x 10^9	$3.87 X 10^9
Sales to noncogenerators	87.4 X 10 kWh	80.8 X 10^9 kWh
Fixed cost/kWh to noncogenerators	80.8 mills	81.4 mills

SOURCE: Edward Kahn, and Michael Merritt, *Dispersed Electricity Generation: Plannlng and Regulation* (contractor reporl to the Office of Technology Assessment, 1981).

base case assumes utility ownership while the PURPA case assumes private ownership.

Table 69 shows the same qualitative phenomenon as figure 61—a rising burden of fixed or common costs to be borne by the nongenerating customers remaining on the utility system. In the PG&E case, the shift is clearly due to the effects of cogeneration. Moreover, a significant part of the increase in fixed cost comes from PURPA incentives under the simultaneous purchase and sale provision—estimated at roughly $445 million, assuming that cogenerators will pay rates for their own use that are roughly 70 percent of the average price (18). The estimate may, of course, be too high. If it is high, the net fixed costs would be less and the risk less extreme. However, the simultaneous purchase and sale incentive is only about one-third of the fixed cost differential (445/1,270) in the two cases. Therefore, even a change in the rate structure to reduce that incentive would not by itself eliminate the problem. Customers remaining on the utility system would have fewer incentives to conserve electricity at this point because reduced sales would only increase the fixed cost burden (29).

Thus, the increasing burden of fixed costs can result from either excess capacity (CWE) or competition (PG&E). Of the two distinct routes to the high fixed cost situation, it is likely that the competition risk may be smaller than the excess capacity risk. The reason for this is the potential escalation in fuel costs. The calculations in table 69 show fuel costs ranging from about 50 percent of total cost in the base case to about 37 percent of total cost in the PURPA case. The fuel cost fraction would rise if fuel cost escalated faster than assumed (roughly 10 percent nominal annual rate). Although no one can predict future oil prices (the dominant fuel in California), the tendency in the past has been to underpredict price increases (29).

On the other hand, the excess capacity risk results in part from the “lumpiness” of investment in baseload facilities. New central station plants come in large unit sizes and require long construction and licensing times. Further, accurate demand forecasting is difficult, and the tendency in the past has been to overestimate the future size of the electricity market. However, demand growth is more sensitive to price increases than pre-1 973 behavior seemed to indicate and large baseload projects are difficult to adjust to reduced growth. Powerplant construction can be deferred (which means extra carrying cost) or canceled (which means losses). Thus, once large projects are initiated there is a tendency to continue them regardless of changing circumstances.

Therefore, where construction commitments are large (as in the CWE case), the balance of economic and institutional forces points toward a greater risk from excess capacity than from competition. At the present time, however, the risks from cogeneration competition are more potential than real due to its low market penetration. One way utilities can deal with possible future competitive threats is by trying to capture the new markets with their own investment.

Other Economic and Social Impacts

OTA’s analysis focused on the economic and social impacts of cogeneration on electric utilities and their customers. However, cogeneration may also have important socioeconomic implications in other sectors, such as business development patterns for fuel and technology suppliers and capital markets, and the role of policy/politics in energy supply. A detailed assessment of these issues is beyond the scope of this report, but some general considerations are outlined below as a framework for future analysis.

PURPA’S partial deregulation of entry into the electricity generation market has received a lot of attention for the opportunities it presents for new and small businesses, and for the changes it may bring to existing economic sectors. For example, the primary sources of fuel for cogenerators in the near term are not expected to be different from the fuel sources for electric utilities (oil, **gas,** and coal). However, as advanced cogeneration technologies with greater fuel flexibility emerge, new opportunities should arise for suppliers of alternate fuels such as municipal **solid waste (MSW), biomass, and synthetic liquids and gases. In some cases, these markets will** be captured by existing large energy companies seek-



Photo credit: Environmental ProtectIon Agency

Advanced cogeneration technologies with greater fuel flexibility may be able to burn municipal solid waste, contributing to the solution of waste disposal problems and providing a new source of revenue for disposal collection agencies

ing diversification opportunities. But other markets may be served by local governments or private entrepreneurs (e.g., MSW), **or** supplied onsite (biomass), or captured by utilities or cogenerators themselves. For instance, one promising scheme for alternate-fueled cogeneration uses a centrally located gasifier that converts coal, biomass, petroleum coke (from refineries), or other nonpremium fuels to a low- or medium-Btu gas for distribution to cogenerators within a limited radius. The gasifier could be owned jointly by the cogenerators (e.g., in an industrial park) or by the local utility as a means of diversifying its energy supply business. A central gasification/remote cogeneration scheme proposed by Arkansas Power & Light is described in detail in chapter 5. Such a scheme would enable cogenerators who cannot use nonpremium fuels (e.g., due to environmental, economic, or site limitations) to centralize the costs of fuel conversion and distribution. Thus, economic and policy considerations that discourage the use of oil and gas in cogeneration also may help to create new business opportunities for a wide range of fuel suppliers. In many cases these opportunities will go to local distribution companies, as opposed to the large producers or distributors that supply central station powerplants.

Markets for technologies also could change as a result of the widespread use of cogeneration. Electric utilities or their construction contractors generally interact directly with the major manufacturers of powerplant equipment. Cogenerators, on the other hand, will be more likely to purchase a total system from vendors acting as middlemen between manufacturers and purchasers. Such vendors will be able to offer a wider

range of "package" systems than a single manufacturer, and to tailor the package more closely to a user's specific needs. Moreover, whereas utilities generally perform their own maintenance, cogeneration vendors may evolve as total service companies that offer repair and maintenance as part of the sales contract. The potential role for such service companies in spreading the burden of maintenance costs and labor requirements contributes to the uncertainty (discussed earlier in this chapter) in assessing these factors. Alternatively, if utilities own cogenerators, they may tend to continue to deal with the major manufacturers with which they are familiar, and to provide their own maintenance.

Similar changes might appear in capital markets with widespread investment in cogeneration. The small unit size of cogenerators will mean smaller but more frequent investments in generating capacity increments. If utilities are investing, then their capitalization is likely to shift away from long-term debt and equity to short-term debtor retained earnings. Alternatively, utilities may establish innovative low-interest loan programs for cogenerators. Third-party investors may play a major role due to the tax incentives introduced by the Economic Recovery Tax Act of 1981. Or potential cogenerators may shift their investment priorities from process equipment to cogeneration. As a result of all these types of owners, new capital markets for energy projects will be introduced. Traditional lending institutions such as banks could become financiers for energy projects. Investment firms will have a new option for sheltering their clients' income. A wide range of traditional financiers may establish leasing subsidiaries.

The potential impacts on fuel, technology, and capital markets outlined above will themselves have far-reaching effects. For example, concern is frequently expressed about the anticompetitive aspects of utility investment in cogeneration. It is argued that utilities may favor their own subsidiaries in contracting for cogenerated power, or **favor one or two manufacturers or vendors of cogeneration systems, and thus foreclose small business opportunities and/or stifle the development of innovative technologies. Similarly, utility loan programs have raised questions about** competition in the banking industry, where market entry traditionally has been regulated. Although these concerns may be real, closing these markets to utilities could also stifle the development of cogeneration capacity, and it may be more sensible to resolve any questions about the competitive effects of utility investment through carefully drafted legislation and regulations, and through established legal and administrative remedies.

The introduction of new fuel supply configurations could have significant impacts on other fuel users as well as on land use patterns and other environmental factors. If oil- or gas-fired cogeneration achieved a significant market penetration, changes could occur in the way these fuels are allocated among noncogenerating residential, commercial, and industrial customers. Centralized fuel conversion systems such as gasifiers would require new dedicated distribution systems, and would strongly influence the location of new cogenerating industries. Where fuel conversion is not centralized, fuel delivery and storage may pose substantial problems, especiall$_y$ **in urban areas.** If the cogeneration site is not able to accommodate large fuel storage facilities (e.g., 30 days' supply), then frequent deliveries could involve noise and/or air pollution as well as traffic congestion. As with the concerns about the anticompetitive aspects of utility ownership of cogenerators, these potential land use problems are probably best solved through careful design and siting of cogenerators and rational local planning, rather than through general disincentives to cogeneration.

Centralization and Decentralization of Electricity Generation

In the two decades following World War II, the electric power industry operated under a declining production cost curve even during periods of general increases in the cost of fuels and the overall consumer price index. The primary contributor to these declining costs was the capture of significant economies of scale that allowed larger powerplants to use fuel more efficiently (see ch. 3). At the same time, obvious cost sav-

ings became associated with the location of multiple units on single sites, and planning responsibilities, decisionmaking authority, and capital assets became concentrated in a rapidly diminishing number of institutions—primarily investor-owned utilities (32). The resulting combination of large powerplants concentrated at a central location and under the authority of a limited number of large organizations has become known as the centralization of the utility industry.

When engineering economies of scale were no longer able to offset other costs for larger powerplants, and the electric power industry's declining cost curve disappeared in the late 1960's, the value of such centralization became increasingly debated. Questions have been raised about the role of centralization in the adverse environmental impacts of large powerplants, in utilities' financial deterioration, and in more qualitative concerns such as individual's feelings that they have lost some control over important aspects of their lives and livelihoods. As a result, it is frequently suggested that the electric power industry should be restructured in favor of a decentralized system based on small-scale technologies located at or near the point of use and subject to local or individual control. This position is advocated by a wide range of groups with varying goals, but the central features of the argument generally are considered to be embodied in the writings of Amory Lovins and colleagues on the "soft energy path" (31).

This section reviews the context of the debate over centralized and decentralized electric energy systems, then analyzes the role that cogeneration might play within that debate. *

Technology and Values

One of the critical features of the current energy policy debate is the lack of consensus on both the facts and the values surrounding energy policy. Thus, there are radically different perceptions about the actual nature of the "energy problem" as well as disagreements about the role energy plays in structuring social organization. One of the most pervasive of these disputes is over the **centralization or decentralization of electric** power production.

The point of view that argues for "decentralization" is embodied in a number of separate movements (e.g., appropriate technology, environmentalist, antinuclear), each of which has its own criteria for evaluating energy technologies. But they all tend to converge with regard to proposals for small-scale renewable energy technologies, as embodied in the "soft-path" future first described by Lovins.

The three primary components of Lovins' soft energy path are:

- prompt commitment to maximizing end-use efficiency;
- rapid development and deployment of small-scale renewable-fueled technologies whose energy quality closely matches the required service; and
- special transitional fossil fuel technologies.

The first component would minimize the energy input into a given end-use function. The second would accelerate reliance on renewable fuels and on energy technologies that contribute to self-reliance, and the third would "tide us over" until the system adjustments anticipated by the first two can be made. Because of Lovins' overriding concern with thermodynamic efficiency, cogeneration—primarily industrial cogeneration using coal-fired fluidized bed combustion systems—is viewed as a major contributor to the transitional fossil fuel technologies.

Lovins' writings have played a major role in winning a place for alternative technologies in the energy policy debate. However, as in other energy policy areas, the facts and values surrounding soft energy paths are subject to debate. With respect to the facts, the uncertainties in capital and operating costs and in output characteristics are especially important. In regard to the values, there is disagreement not only between soft and hard path advocates, but also between different segments of the alternative energy movement.

For example, Lovins only applies soft energy technologies at the margin; he does not advocate the early replacement of existing central station

*Much of the following discussion is from Hoberg (26).

powerplants and their accompanying transmission and distribution networks. Other "appropriate" technology advocates focus on stand-alone applications that are totally incompatible with the existing electricity supply system (e.g., windmills or photovoltaics coupled with battery storage). Moreover, there is no real consensus among soft path advocates as to which values should predominate in such technological decisions. Some place a great deal of emphasis on fostering decentralization in order to gain control over the technologies that affect their lives, while others emphasize economic efficiency.

The debate about the role of cogeneration in energy policy typifies these fact and value disputes in several ways. It can be a small-scale technology located at the point of use, or larger systems can be centrally located and the energy products distributed among several co-owners or customers. Cogenerators can use coal or other alternate fuels as their primary energy source, but the most economic systems for some applications will rely on oil or gas in the near term (e.g., gas turbines, diesels). Cogeneration can present significant energy savings when compared to central station generation and separate thermal power production, but it also will be competing against conservation, coal, and renewable fuels on many electric systems, and its electric power output is less certain. Thus, whether cogeneration will be a favored technology to advocates of decentralized energy systems will depend heavily on the technology and the mode of deployment chosen.

Centralization and Decentralization

The concepts of centralization and decentralization are critical to an assessment of the social and institutional impacts of dispersed electricity generation, but are all too often left undefined. In this discussion, these terms will be used to describe a measure of the distribution of control, authority, or autonomy throughout a system (in this case the energy and social systems), where "control" refers to the ability to affect the behavior of others or of the system itself. A situation in which a single component controls all others and the system itself (e.g., a monopoly or monopsony) defines the centralized extreme, while at the decentralized extreme each individual is autonomous and therefore cannot change the system or its components (e.g., perfect competition). This concept of centralization is similar to that in organization and administration theory, where the concern is locating the decision making authority within an organization or institution. The concepts of centralization and decentralization of control are particularly important to the structure of organizations because mismatches between that structure and the task it is designed to accomplish can result in inefficiencies (7).

The centralization or decentralization of **control** should be distinguished from other concepts that focus on size or geographical concentration. While these factors may influence the degree of centralization, they do not define it. Similarly, it is useful to distinguish **technical** from **social** centralization. Thus, technical systems can be defined in terms of their dependence on one or a few components (e.g., central dispatch of an interconnected electric utility system) without necessarily implying an equal degree of authority over a related social system.

Centralization/Decentralization and Cogeneration

How cogeneration fits into this definition of centralization and decentralization will depend on its deployment and operating characteristics. Thus, the lower minimum efficient **scale** of cogeneration relative to conventional powerplants can contribute to decentralization because the smaller size and lower costs make the technology accessible to more people. On the other hand, cogenerators are more **complex** than traditional onsite thermal energy systems (e.g., boilers, furnaces), and they are likely to require new technical and managerial skills in industrial and commercial enterprises that own and operate them, or in utility companies that deploy them in their service areas. Whether a firm decides to train or acquire its own expertise or to rely on a vendor, utility, or other service company may determine that firm's perceptions of autonomy.

Similarly, the **resource/demand characteristics** of cogeneration, including the type of primary energy source and its concentration or density,

the type of technology and its concentration, and the actual number of components in the resource, conversion, and demand categories will influence the degree of centralization. In general, decentralization might occur if the **energy required within** a given area is approximately equal to the energy available in that area. **If energy must be imported, the system will** be more vulnerable to external control and thus relatively centralized. Similarly, where the energy can be exported or distributed over a larger area, a relatively centralized dependence of dispersed users on a concentrated resource may result.

Finally, the amount of **political or social importance** associated with cogeneration will be a significant factor in determining centralization and decentralization of control. For example, PURPA encourages grid-connected cogeneration, offering economic incentives for operating characteristics (such as central dispatch) that increase utilities' control over the deployment and use of the technology.

Because all these characteristics will vary widely, it is clear that cogeneration cannot automatically be considered a decentralized technology that will lead to a decentralized social structure. Similarly, central station powerplants will not always lead to centralized social organization, although this has been the predominant trend in the electric power industry. Rather, it is possible **to envision centralized technologies that contribute to a decentralized social or political system, as well as decentralized technologies leading to centralization of control. For example, Franklin Roosevelt saw centralized generation of electricity with transmission to outlying areas as the key to a decentralized society:**

> **Sheer inertia has caused us to neglect formulating a public policy that would promote the opportunity to take advantage of the flexibility of electricity; that would send it out wherever and whenever wanted at the lowest possible cost. We are continuing the forms of overcentralization of industry caused by the characteristics of the steam engine, long after we have had technically available a form of energy which should promote decentralization of industry (34).**

The central theme underlying the possibility of such a **centralized energy system supplying a decentralized society** is the proposition that the most effective means of preserving diversity, flexibility, and freedom of choice in social structure is to ensure abundant supplies of energy at the lowest possible cost (termed the "cornucopia strategy"). The less scarce the fundamental energy input, the less influence energy would have on the structure of social organization. Cogeneration (and other alternative technologies) would be included in the cornucopia strategy to the extent that they pose economic advantages over conventional technologies. Moreover, a recent analysis suggests that cogeneration combined with the centralized electricity grid will contribute to decentralization in the economy(1). This analysis argues that the lack of significant scale effects associated with connection to a centralized grid will mean that large firms will not have competitive advantages over small firms in energy access (ignoring declining block rates or relative process efficiencies). Thus, diversity and decentralization of organizational structure in industry and business might be promoted.

The idea of centralized energy systems leading to decentralized social organization looks more to fragmentation of power among interest groups and various levels of government wherein freedom and flexibility in lifestyles are fostered and preserved, while the appropriate technology movement embodies a notion of decentralization that consists of a loosely coupled system of nearly autonomous and self-reliant communities. As such, the former view can accommodate a great deal of specialization and differentiation in societal function, at aggregate levels, that the latter fundamentally opposes.

On the other hand, it is also possible to envision a **decentralized energy system in a centralized political economy.** This might come about in two ways. One analysis considers the case where some combination of a deterioration in the economics of utility generated electricity and an enhanced competitive position of cogeneration systems brings about an industrywide movement towards cogeneration as the source of electric power and process heat/steam. Because there are economies of **scale** (in capital equipment, O&M, pollution control, etc.) inherent in cogeneration devices, the larger firms in a certain industry

group will be able to produce energy more cheaply than the smaller firms, which would give the larger firms a competitive advantage, contributing to the elimination or absorption of smaller firms by the larger firms. The end result is centralization in industry (as measured by industrial concentration) (26).

A second view of this configuration-decentralized energy systems in the context of centralized control—also could result from policy considerations. In fact, some commentators have suggested that this is the most likely result:

> The most plausible vision of a renewable-energy future is one that offers less freedom and less true diversity, more centralization of decision, and more state (i.e., government) interference and corporate domination in our lives, than is the case in the present society in the United States . . . (37).

Clearly, this combination of decentralized energy and centralized social organization depends more on policy orientations than on any of the other factors that influence the degree of centralization/decentralization. Lovins terms this alternative a coercive one in that it is most likely to result from policies that mandate—rather than use market incentives for—a decentralized energy system (or the proverbial distinction between the carrot and the stick). Alternatively, such centralization could result from demands for control of the impacts of decentralized technologies in that it is easier to impose and enforce controls in a centralized manner (e.g., uniform Federal standards for system design at the point of manufacture) than it is to monitor and enforce such controls at myriad points of use. At the extreme, authoritative solutions may be seen as necessary to meet an industrial society's need for adequate and reliable supplies of energy, or to allocate losses in the event of an energy supply shortfall (37).

As has been seen above, cogeneration (and other dispersed generating systems) cannot necessarily be considered either a decentralized or a centralized energy system nor will they necessarily lead to either centralization or decentralization of social organization. Rather the degree of centralization/decentralization will depend on site specific, market, and policy factors such as the mode of operation, form of ownership, resulting profit and competitive aspects, and relative policy emphasis on their deployment.

CHAPTER 6 REFERENCES

1. Asbury, Joseph G., and Webb, Steven B., *Centralizing or Decentralizing: The Impact of Decentralized Electric Generation* (Argonne, Ill.: Argonne National Laboratory, ANL/SPG-16, 1979).
2. Bell, Douglas, Standards Development Branch, U.S. Environmental Protection Agency, private communication to OTA.
3. Bhargava, Vijay, California Air Resources Board, private communication to OTA, September 1981.
4. *Bioenergy Bulletin, vol.* 11, No. *3,* published by U.S. DOE, Region X, Mar. 15, 1981.
5. Breitstein, L. and Gant, R. E., *M/US Systems Analysis–Effects of Unfavorable Meteorological Conditions and Buildings Configuration on Air Quality* (Oak Ridge, Term.: Oak Ridge National Laboratory, ORNL/HUD/MIUS-29, February 1976).
6. Brooklyn Union Gas/FIAT, *TOTEM Technical Description,* October 1978.
7. California Air Resources Board, *Proposed Strategy for the Control of Nitrogen Oxide Emissions from Stationary Internal Combustion Engines* (State of California, October, 1979).
8. Casten, Thomas, Cogeneration Development Corp., private communication to OTA.
9. Chandler, Alfred D., Jr., *Strategy and Structure: Chapters in the History of American Industrial Enterprise* (Cambridge, Mass.: The MIT Press, 1962).
10. "Cogeneration Proponents Will Seek An Air Act Change Recognizing Greater Efficiencies," *Inside EPA,* Apr. 3, 1981.
11. Consolidated Edison Co. of New York, written testimony before the New York State Department of Public Service, "Environmental Assessment of Cogeneration in New York City," Mar. 17, 1980, p. 13.
12. Dadiani, John, Cogeneration—Status *and Environmental Issues* (contract 68-03-2560, draft report to EPA, 1980),
13. Davis, W. T., and Kolb, J. O., *Environment/ Assessment of Air Quality, Noise and Cooling Tower*

Drift From the Jersey City Total Energy Demonstration (Oak Ridge, Term.: Oak Ridge National Laboratory, ORNUHUD/MIUS-52, June 1980).
14. Domaracki, Alan J., and Sistla, Gopal, testimony before the State Department of Public Service before the Commission, case No. 27574, July 1980.
15. Dryer, Frederick, Princeton University, private communication to OTA, October 1981.
16. Dukakis, Michael S., *Governor's Commission on Cogeneration, Cogeneration: Its Benefits to New Eng/and* (Governor of Massachusetts, October 1978).
17. Energy and Resource Consultants, Inc., *Federal and State Environmental Permitting and Safety Regulations for Dispersed Electric Generation Technologies,* contractor report to OTA, 1980.
18. Environmental Defense Fund, *An Alternative to the Warner Va//ey Energy System* (Berkeley, Calif.: EDF, Jlliy 1980).
19. Environmental Research and Technology, Inc., *Air Quality Impact of Diesel Cogeneration in New York City,* Document P-A 302, November 1979.
20. Ferris, B. G. Jr., "Health Effects of Exposure to Low Levels of Regulated Air Pollutants. A Critical Review," 28J. *Air Pollution Control Association 482,* 1978.
21. Freudenthal, P. C., additional rebuttal testimony, New York Public Service Commission case No. 27574, Nov. 13, 1980.
22. Freudenthal, P., Consolidated Edison, private communication to OTA.
23. "General Discussion: Health Effects of Exposure to Low Levels of Regulated Air Pollutants," J. *Air Pollution Control Association 28:891, 1978).*
24. Ghassemi, M. and Lyer, R., *Environmental Aspects of Synfue/ Utilization (EPA-600/7-81 -025,* March 1981).
25. Griffin, H. E., et al., *Health Eflects of Exposure to Diesel Exhaust* (Washington, D. C.: National Academy of Sciences, 1980).
26. Hoberg, George, *Electricity, Decentralization, and Society: The Soci~Political Aspects of Dispersed Electric Generating Technologies,* contractor report to OTA, January 1981.
27. ICF, Inc., *A Technical and Economic Evaluation of Dispersed Electric Generation Technologies,* contractor report to OTA, October 1980.
28. Jarvis, P. M., "Methanol as Gas Turbine Fuel," paper presented at the 1974 Engineering Foundation Conference, Methanol as an Alternate Fuel, Henneker, N. H., July 1974.
29. Kahn, Edward, and Merritt, Michael, *Dispersed Electricity Generation: Planning and Regulation,* contractor report to OTA, 1981.
30. Komanoff, Charles, "Nuclear Costs Spiral Above Coal," *Public Power,* Sept. 10, 1981.
31. Lovings, Amory, *Soft Energy Paths: TowardA Durable Peace* (Cambridge, Mass.: Ballinger Press, 1 977).
32. Messing, Marc, Friesema, H. Paul, and Morrell, David, *Centralized Power* (Washington, D. C.: Environmental Policy Institute, 1979).
33. Office of Technology Assessment, U.S. Congress, The Direct *Use of Coal,* OTA-E-86 (Washington, D. C.: U.S. Government Printing Office, April 1 979).
34. President Franklin D. Roosevelt, speech before the World Power Conference, 1936, quoted in *The Energy Controversy: Soft Path Questions and Answers,* Hugh Nash (cd.) (San Francisco: Friends of the Earth, 1979).
35. Reese, R. E., and Nisenbaum, D., "Suggested Control Measure for the Control of Nitrogen Oxide Emissions From Stationary Internal Combustion Engines" (California Air Resources Board, May 1980).
36. Sheppard, D., et al., "Exercise Increases Sulfur Dioxide–induced Bronchoconstriction in Asthmatic Subjects," *Am. Rev. Resp. Dis.,* May 1981.
37. Tugwell, Franklin, "Energy and Political Economy," *Comparative Politics,* October 1980.
38. U.S. Environmental Protection Agency, *Compilation of Air Pollutant Emission Factors* (AP-42), 1978.
39. U.S. Environmental Protection Agency, *Standards Support and Environmental Impact Statement for Stationary Internal Combustion Engines (EPA-4501* 2-78-125a, draft, July 1979).
40. U.S. Environmental Protection Agency, *Standards Support and Environmental Impact Statement for Stationary Gas Turbines (EPA-450/2 -77-Ol* 7a, September 1977).
41. U.S. Department of Energy, *Environmental Readiness* Document- *Cogeneration* (DOE/ERD-0003, 1978).
42. U.S. General Accounting Office, *Industrial Cogeneration— What It Is, How It Works, Its Potential* (Washington, D.C.: U.S. Government Printing Office, EMD-80-7, Apr. 29, 1980).
43. Wilson, R. P., et al, "Single-Cylinder Tests of Emission Control Methods for Medium-Speed Diesel Engines," ASME paper 82-DGP-28, March 1982.
44. 40 CFR 52.21, 52.24.
45. 40 CFR pt. 60, subpts. D,E.
46. 40 CFR pt. 60, subpt. GG.

Chapter 7
Policy Analysis

Contents

Page

Cogeneration and Oil Savings. 267

Economic incentives for Cogeneration 270

Utility ownership of Cogenerators. 273

Interconnection Requirements 275

Air Quality Impacts 276

Research and Development 277

Summary 278

Chapter 7 References 280

Table

Table No. Page

70. Summary of Policy Considerations Related to Cogeneration 279

Figure

Figure No. Page

62. Cogeneration Development Under Low, Medium, and High Utility Purchase Rates: 1981-90 271

Chapter 7
Policy Analysis

A comprehensive Federal policy toward cogeneration was established in 1978. In general, the elements of this policy, which are described in detail in chapter 3, offer economic and regulatory incentives for cogeneration applications that will promote the efficient use of energy, economic, and public utility resources. The major policy initiatives include title II of the Public Utility Regulatory Policies Act of 1978 (PURPA), the Powerplant and Industrial Fuel Use Act of 1978 (FUA), and the Energy Tax Act of 1978 (as amended by the Windfall Profits Tax Act of 1980 and the Economic Recovery Tax Act of 1981), as well as provisions of the Clean Air Act, general aspects of utility regulation, and Government support for research and development (R&D) and for demonstration projects.

It is difficult to predict what long-term effects these Federal policies will have on cogeneration. Federal ratemaking, fuel use, R&D, and environmental policies are now shifting in focus; many of the tax initiatives are too new for data on their effects to be available; and court decisions are pending on the validity of the ratemaking and interconnection provisions of PURPA. Despite these uncertainties, some aspects of Federal cogeneration policy that may discourage the implementation of cogeneration projects, or that may result in adverse impacts from such projects, have been identified and are analyzed below. These include the use of oil by cogenerators, economic incentives for cogeneration, utility ownership of cogeneration capacity, interconnection requirements for cogeneration systems, the effects of cogeneration on air quality, and the focus of R&D.

COGENERATION AND OIL SAVINGS

One of the principal objectives of Federal policy toward cogeneration is to encourage the implementation of those projects that will reduce net oil consumption, particularly by electric utilities and industry. However, despite their inherent energy efficiency, not all cogenerators will save oil. Rather, cogeneration will result in net oil savings only if an alternate-fueled cogenerator (e.g., one that burns coal, biomass, wastes), displaces **either** an electric generating plant **or** a thermal energy system that uses oil, or if an oil burning cogenerator replaces separate electric and thermal energy systems that **both** use oil and would continue to do so for most of the useful life of the cogenerator. Thus, if an oil-fired cogenerator is substituted for either an electric or thermal conversion technology that uses an alternate fuel, or that would have converted to an alternate fuel during the useful life of the cogenerator, then cogeneration actually could increase net oil consumption.

In general, Federal policies under PURPA, FUA, and the tax code are designed to discourage cogeneration applications that would not offer net oil savings over the technology's useful life. The rates for utility purchases of cogenerated electricity (and other incentives) under PURPA are only available to oil-fueled cogenerators if they meet the efficiency and operating standards established by the Federal Energy Regulatory Commission (FERC) (see ch. 3). Moreover, the PURPA incentives are more economically advantageous to cogenerators in regions where utilities depend heavily on oil-fired generating capacity. In these areas, the utilities' purchase power rates are *likely* to be based on the price of oil, and thus will be higher than the rates of utilities with primarily coal, nuclear, or hydroelectric capacity. Therefore, oil-fired cogenerators that do achieve net oil savings usually will have higher purchase power rates than those that do not. (Exceptions include States where the utility regulatory com-

mission has set purchase power rates equal to the price of oil while the purchasing utility actually uses a mix of fuels, or has established explicit subsidy rates for purchases of cogenerated power.) Similarly, oil burning cogenerators only can obtain an exemption from the FUA prohibitions on oil and natural gas use in powerplants and industrial boilers if they can demonstrate net oil or gas savings. Finally, the energy tax credits generally are available only for energy property that uses fuels other than oil or gas.

When these policies were enacted, oil prices were escalating rapidly. It was assumed that the rising prices and uncertain availability of petroleum fuels, when combined with Federal policy, would be sufficient to ensure that only those oil-fired cogenerators that could achieve net oil savings would be worth the investment risk. However, oil prices have leveled off recently, and, although most analysts project that prices will rise slowly through the end of the decade, future prices will not be so high as projected when the National Energy Act was passed.

Thus, oil-fueled cogeneration that does not offer net oil savings may be attractive in spite of supply and policy disincentives. For example, some cogenerators may not need high purchase power rates under PURPA to be economically feasible (e.g., where retail electricity rates are exceptionally high), or may not wish to distribute electricity to the utility grid (e.g., if onsite electricity needs are large and retail rates are very high, or if reliability of electricity supply is essential). In addition, the FUA prohibitions only apply to cogenerators larger than about **10 megawatts (MW) (or a** combined capacity of 25 MW per site) and those that sell more than half of their electric energy output. Furthermore, oil-fired cogenerators may be eligible for the energy tax credit if they consist of a retrofit at an existing industrial or commercial facility that results in a reduction in the amount of energy used onsite (e.g., adding a heat exchanger to an existing diesel generator). Where these special circumstances exist, oil-fired cogeneration could "slip through the cracks" in existing policies and result in increased oil use.

If net oil savings is the desired policy goal, then a number of changes in Federal policy are possible to close these gaps and further discourage oil-fired cogeneration that would not offer such savings. First, the FERC regulations implementing PURPA could be revised to include standards for fuel use in qualifying facilities (e.g., oil-fired cogenerators would not qualify for the economic and regulatory incentives offered by PURPA unless they could demonstrate a lifetime oil savings). PURPA authorized the implementation of fuel use standards, but FERC chose not to exercise its discretionary authority in this area in the belief that other provisions of the act (i. e., the efficiency and operating standards and the avoided cost rate structure) would, when combined with market forces, be sufficient to discourage oil-fired cogeneration. As stated in the **introduction to the FERC rules implementing section 210 of PURPA:**

> **Had Congress not intended that the benefits of qualifying status be extended to oil- and natural gas-fired cogeneration facilities, the statute or [Conference Report] would have contained a restriction on fuel use similar to that which is provided for small power producers. The Congress knew that cogeneration facilities typically use natural gas and oil . . . the Congress enacted [FUA] at the same time as PURPA, [FUA] provides authority to the Secretary of Energy to restrict the use of oil and gas in cogeneration facilities. Therefore, [FERC] does not believe it necessary or appropriate to require an additional layer of fuel use regulation on technologies . . . for which another agency has authority to restrict fuel use. . . . To the extent that oil- and natural gas-fired cogeneration facilities provide for more efficient use of these resources, the Commission believes that the benefits of qualifying status should be extended to them (4).**

FERC'S decision not to require cogenerators to meet fuel use requirements in order to qualify under PURPA was upheld in January 1982 by the U.S. Court of Appeals. The court agreed with FERC'S reasoning, and held that the regulations promulgated by FERC were a reasoned and adequate response to the discretionary congressional mandate.

Adding fuel use restrictions to the PURPA regulations would not necessarily block those facilities for which oil use may be economical even without the benefit of the PURPA incentives (i. e., those systems that do not need to be interconnected with the grid). To reach these cogenerators, Congress could amend FUA to prohibit the use of oil in all cogenerators, regardless of size or electricity sales, unless net oil savings are demonstrated. The guidelines for such a demonstration already are included in the Economic Regulatory Administration regulations on larger cogenerators, but extending them to cover smaller systems would require congressional action.

Finally, Congress could amend the energy tax credit (and other advantageous tax code provisions such as accelerated cost recovery) to deny credits or deductions to oil-fired cogeneration systems that cannot demonstrate net oil savings (regardless of reductions in onsite energy use).

However, each of these provisions would impose additional layers of regulation on an already complicated set of fuel use policies, and would only affect a small portion of the cogeneration market. Perhaps as little as one-third of the industrial cogeneration market potential is at sites that would install less than 25 MW. As a result, even if all the cogenerators that would be subject to these regulations demonstrated net oil savings and were installed, the resulting savings could be as low as 60,000 to 90,000 barrels of oil equivalent per day (bee/day) in 1990 (2). Moreover, the difficulty of demonstrating net oil savings and the cumbersome paperwork involved in regulations of this type could discourage even those oil burning cogenerators that would pose net savings.

One alternative to imposing additional regulation of oil use would be to tax oil consumption (e.g., an oil import fee). This would be **relatively simple to administer, and would provide an additional Federal revenue stream. Although it has been argued that such a tax would be inflationary, it also would be an effective conservation measure because it** would reach all users of oil. Therefore, larger savings could be expected than if only cogeneration were targeted.

Another alternative to additional prohibitions on oil-fired cogeneration is to amend existing Federal laws and regulations to encourage the near-term use of gas instead of oil. Natural gas supplies currently are more abundant and less expensive than oil, and over 90 percent of the natural gas used in the United States is produced domestically rather than imported. Where purchase power rates are set at or near the price of oil-fired electricity and utilities have oil or gas burning capacity, natural gas fueled cogeneration will be economically attractive even if natural gas prices approach those of distillate oil.

The use of natural gas in cogenerators also would complement the policies established under PURPA that encourage the export of cogenerated electricity to the grid as an economical alternative to building new central station powerplants, or as a form of insurance against unexpected changes in electricity demand. Currently available technologies that are likely to produce more electricity than is needed onsite (i.e., those with a high ratio of electricity-to-steam output–E/S ratio) cannot burn fuels other than oil or gas directly, and providing incentives (or removing disincentives) for the use of gas could automatically discourage oil consumption.

The near-term use of natural gas in cogeneration systems also could be an integral part of an evolutionary fuels strategy, because synthetic gaseous fuels from coal, biomass, or wastes are likely to be commercially feasible on a small or medium scale (i.e., onsite gasification systems or those with a limited distribution system) much sooner than synthetic liquid fuels. Moreover, gaseous synfuels with a low- or medium-Btu value—which can be burned in cogenerators with a high E/S ratio—are likely to be produced more cheaply from alternate fuels (e.g., coal, biomass, solid waste) than liquid synfuels. The most promising near-term liquid synthetic fuel that could be produced on a relatively small scale is methanol from wood, which also could be used in combustion turbines.

The policy options that provide incentives (or remove disincentives) for the use of gas in cogen-

98-946 c1 - 93 - 19 : QL 3

erators are similar to those described above for discouraging oil use:

- FERC could amend the PURPA regulations (without further congressional action) to deny qualifying facility status to oil-fired systems but specifically allow such status for gas burning cogenerators.
- Congress could amend FUA to extend the prohibitions to all oil-fired cogenerators regardless of size or electricity sales, while specifically exempting natural gas-fired cogenerators (or exempting those that would convert to synthetic gas or other fuels by 1990 or 1995).
- Congress could amend the energy tax credits to allow credits for gas-fired energy property but not oil-fired systems.

However, as noted above, each of these measures would prevent or discourage the implementation of those oil-fired systems that **would** pose net oil savings.

Encouraging gas-fired cogeneration in order to discourage or prevent oil burning systems is a controversial option. From a national fuels policy perspective, many analysts consider gas to be equivalent to oil in terms of its value as a premium fuel and its future supply. If onsite or modular gasification systems do not become commercial as soon as their developers project, or if the cost of synthetic low- or medium-Btu gas remains significantly higher than the cost of natural gas, then a strategy that encourages the near-term use of natural gas and a switch to synthetic gas in the long run could fail, and thus lock cogenerators into natural gas use for 10 to 20 years. Moreover, the potentially high cost of conversion to solid fuels where these fuels can be burned directly (e.g., fluidized bed), could cause cogenerators to stay on natural gas even if the solid fuel is much cheaper in the long run. Thus, making cogeneration with natural gas attractive eventually could add to supply pressures if future production and reserves are not so large as optimistic gas industry analysts project.

Large established gas users (such as electric utilites) understandably are concerned about the future uncertainty of their fuel supplies, and argue that neither oil- nor gas-fired cogenerators should be eligible for Government incentives under PURPA and the tax code. However, limiting access to, or otherwise discouraging the use of these fuels could prevent cogenerators from taking advantage of those savings that might be available. For example, a recent study that examined the effects of an additional 10 percent investment tax credit for cogeneration systems that used fuels other than oil or natural gas found that such a credit would actually **reduce** both net energy and oil savings. The reduction occurred because the additional credit would favor cogeneration technologies that use coal or other alternative fuels and thus, in the near term, would have a low E/S ratio and would not be able to displace utility oil fueled capacity (2). Therefore, measures that limit oil and gas use in cogeneration will not necessarily guarantee net oil/gas savings.

Some large established users also have argued that future supplies of high-Btu synthetic gas (the type that would be produced in large centralized facilities and distributed in pipelines) should be reserved for such users because synthetic gas with a high energy content will be supply-limited for at least 20 years. OTA did not analyze the issue of allocating such gas to a particular class of users. Rather, the gasification schemes appropriate to cogeneration would produce low- or medium-Btu gas for onsite use or limited distribution, and thus would not compete in the same markets with potential users of high-Btu synthetic gas.

ECONOMIC INCENTIVES FOR COGENERATION

Both the amount of cogeneration capacity that **will** be considered an attractive investment, and the amount of cogenerated electricity that may be available for export offsite, are extremely sensitive to economic considerations such as rates for utility purchases of cogenerated power, tax incentives, and other policy measures that reduce either the capital or operating costs of cogenera-

tion systems. For example, a study of the potential for cogeneration development by 1990 in the five top steam-using industries under three levels of utility purchase rates found that the amount of capacity that might be installed was almost six times higher under the "high" purchase rates (ranging from 2.5cents to 7.5cents/kWh depending on the geographic region—see table 36) than under the "low" rates (1.0cents to 4.5cents/kWh). Moreover, under the higher assumed rates, a much greater proportion of the installed capacity would be high E/S ratio technologies such as combined cycles and combustion turbines that would be more likely to make electricity available to the grid (see fig. 62). Under the lower assumed rates, the amount of cogenerated steam was reduced 11 percent relative to the medium case, but the amount of cogenerated electricity was reduced by 50 percent (2). Analyses of tax provisions (e.g., investment tax credits and accelerated depreciation), and of subsidized financing (e.g., loan guarantees, low interest loans) show a similar but less substantial sensitivity of cogeneration installation and electric output to these economic incentives.

PURPA requires that purchase power rates be just and reasonable to the electric utilities' consumers and in the public interest, and that they not exceed the incremental cost to the utility of generating electricity itself or purchasing it from the grid (the "avoided cost"). FERC originally set rates for purchases of cogenerated power under PURPA equal to the utilities' incremental cost, reasoning that only 100 percent avoided cost rates would simultaneously encourage the fullest possible development of the cogeneration market and fulfill the statutory requirements for just and reasonable rates. However, the FERC rules on purchase rates were vacated by the U.S. Court of Appeals in January 1982 on the grounds that FERC had not adequately justified its choice of the "ceiling" rate established in the legislation, when a rate less than 100 percent of the avoided cost would share the economic benefits of cogeneration with the utilities' noncogenerating ratepayers (see ch, 3). The U.S. Supreme COURt will review the appeals court decision, but final disposition of the case (either on appeal or through revised regulations, if necessary) may not occur for a year or two.

Figure 62.—Cogeneration Development Under Low, Medium, and High Utiiity Purchase Rates: 1981.90 (MW)

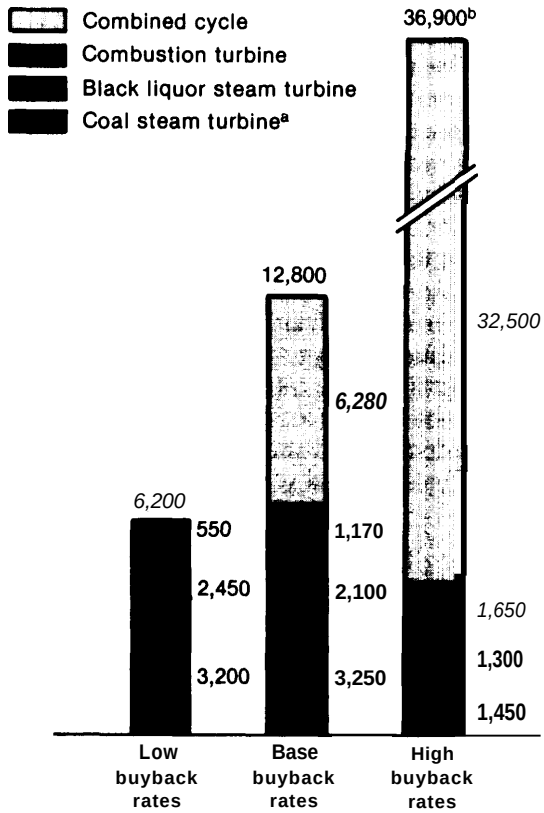

[a]Includes coal boilers and atmospherlc fluidized-bed boilers.
b The high buyback rates and amount of MW development are considered infeasible, but are shown to demonstrate the sensitivity of cogeneration development to buyback rates.

SOURCE: Resource Planning Associates, The Potential *for Cogeneration Development by 1990* (Cambridge, Mass.: Resource Planning Associates, July 1981).

Although the full avoided cost rates remain in effect pending a final decision, many potential cogenerators (except where State legislatures or regulatory commissions have instituted full avoided cost pricing independently of PURPA) have put their plans on hold as they wait to see whether, in the long term, it will be economically feasible for them to export power to the grid–and, if so, how much—or for them to cogenerate at all. Furthermore, the uncertainty about future purchase power rates has chilled the interest of potential financial backers, who may not be willing to invest in cogeneration projects without firm long-term purchase contracts with a utility until

after a ruling by the Supreme Court, and—possibly–then only if the full avoided cost regulations are upheld.

Whether purchase power rates based on 100 percent of the utility's avoided cost are seen as desirable depends on the policy goal. If the goal is to maximize cogeneration's market potential, for whatever reason, then rates that reflect at least the full avoided cost are necessary (some States have instituted even higher subsidy rates to encourage cogeneration). In this case, cogeneration would bean alternative (at least in the short term) to building new central station powerplants. However, **if the goal is to provide the least cost electricity supply to the ratepayer,** then purchase power rates based on less than 100 percent of the avoided cost would share any economic savings from cogeneration with the utilities' other consumers.

As a compromise, the percentage of avoided cost on which purchase power rates are based could be determined regionally. In areas where utilities are heavily dependent on oil and/or are experiencing demand growth (e.g., the Northeast and Pacific Coast), rates based on 100 percent of the short-term marginal cost (usually equivalent to the cost of oil—see ch. 3) could be instituted to encourage the fullest development of cogeneration. These rates would share the benefits of cogeneration's potentially lower capital and interest costs with the ratepayers, but would not pass on any of the cost benefits attributable to cogeneration's oil savings. Alternatively, rates based on the full longrun marginal cost (equivalent to the cost of coal or nuclear capacity, or of advanced technologies) could share more of the cost savings with noncogenerating customers. In regions where the utilities' full avoided cost is very low, but cogeneration can provide insurance against sudden changes in demand, full avoided cost rates may be justified even though they would not reduce rates for other customers. But where utilities are dependent on alternate fuels and already have substantial excess capacity, cogeneration can increase rates to other consumers (through reduced fixed cost coverage–see ch. 6), and rates at less than the full avoided cost–perhaps even equal to the cogeneration cost–may be justified.

A second source of uncertainty in Federal policies that provide economic incentives for cogeneration is the continued availability of tax provisions that reduce the capital cost of cogeneration. The special tax credit for investments in alternative energy property expires at the end of 1982. A recent study of the economic incentives for cogeneration found that extending the 10 percent tax credit to 1990 (and making it applicable to oil- and natural gas-fired systems) could increase net oil savings attributable to cogeneration from 185,000 bee/day in 1990 to 210,000 bee/day. If all the fuel economically demanded by the increased investment were natural gas, the direct oil savings were estimated to increase from 280,000 to 310,000 bee/day. In addition, the amount of cogeneration capacity was projected to increase approximately 11 percent (from 12,800 MW of installed capacity to 14,400 MW) in 1990. The resulting reduction in tax receipts (discounted at a 10 percent rate) was estimated at $1.6 billion (equivalent, in this analysis, to $1.60/MMBtu, versus the saved oil cost of $5/MMBtu) (2).

The 1982 expiration of the energy tax credit will not only reduce the available investment credit by half, but also may encourage investment in cogeneration technologies "before their time." That is, advanced cogeneration technologies currently under development (including evolutionary improvements in existing technologies) will have greater fuel flexibility, higher E/S ratios, better operating efficiency, and improved environmental emissions. Many of these improvements will be ready by the mid-1980's. Thus, the continued availability of the energy tax credit would enable potential cogenerators to wait until they could select a technology that would maximize the oil savings and other benefits of cogeneration. In addition, extending the energy tax credit to 1990 would enhance cogeneration's role in an evolutionary fuels strategy, in that a potential cogenerator could invest in the basic technology now and still receive the tax credit for a later addition of fuel flexibility (e.g., a gasifier or fluidized bed combustor). Finally, availability of the energy credit after 1982 would allow innovative financing mechanisms to be developed more fully.

Similarly, the leasing provisions of the Economic Recovery Tax Act have been targeted for repeal due to the loss in Federal revenues from their widespread use by corporations seeking tax shelters. These provisions provide the primary incentive for third-party investment in technologies (e.g., cogeneration) that will contribute to energy efficiency and increased productivity, and that may be economically attractive for the user but for which the capital cost is prohibitive given the need to invest in process improvements or conservation measures. The uncertainty in their continued availability is chilling third-party investment, and thus the development of innovative private financing arrangements, because potential investors are chary of committing capital without a guarantee that the needed tax incentives will be available over the life of the investment. Additional analysis is needed to review the tradeoff between the degree to which tax leasing contributes to investments in increased energy efficiency and productivity, and its effects on Federal revenues.

Other policy measures that would provide an economic incentive for cogeneration are options for subsidized financing. High interest rates pose a substantial disincentive to debt financing, while recessionary business trends inhibit equity and internal financing. Subsidized financing options such as low interest loans or loan guarantees can reduce the problems related to the cost and availability of capital. These options could be implemented through funding for existing programs. However, Government subsidies for financing would be difficult to implement given the current Federal budget situation. The most effective way to enhance the investment climate is through policies that promote general economic recovery, and which lower interest rates by reducing inflation.

As an alternative to Government financing subsidies, private subsidies could be **offered.** For example, Southern California Edison offers funding assistance of up to $100,000 or 20 percent of the capital cost (excluding installation labor) of their customers' cogeneration systems. Similar programs are offered by some utilities for solar or conservation investments. The utility's investment might be included in the rate base, and the carrying costs shared by all the utility's customers. Utility involvement could encourage better integration between cogenerators and utility systems, and could increase the market potential because utilities have a broader perspective on the marginal costs of alternative energy supplies and because' subsidized financing could pose an incentive to more potential cogenerators than tax credits. However, utility financing is subject to the same potential drawbacks as utility ownership (see below), and may increase the capital cost **if the utility relies on equity capital for its** financing program.

UTILITY OWNERSHIP OF COGENERATORS

The economic and regulatory incentives established under PURPA are granted only to "qualifying facil it ies. ' One of the statutory requirements for qualification is that the owner of a facility not be "primarily engaged in the generation or sale of electric power" (other than electric power solely from cogeneration or small power production facilities) (3). The FERC rules implementing this requirement specify that if an electric utility, a utility holding company, or a subsidiary of either holds more than a 50 percent interest in a cogeneration facility, that facility will not qualify for the PURPA incentives. **It is important to note that** PURPA **only limits the extent to which utility-owned systems can receive an unregulated rate of return and can price cogenerated electricity based on the cost of alternate power supplies. It does not prohibit or restrict electric utility ownership or operation of cogenerators, and where cogeneration is economically attractive relative to conventional powerplants, utilities are, in** some cases, making the investment. Utility-owned cogenerators also are subject to less attractive treatment under the Energy Tax Act of 1978 because

public utility property (with the exception of hydroelectric equipment) is not eligible for the energy tax credit.

The ownership rule under PURPA and the unequal tax treatment of utilities have become controversial for several reasons. Electric utilities argue that the ownership rule discriminates against them because it does not apply equally to other types of utilities (e.g., gas utilities). When combined with the tax provisions, the 50 percent ownership limitation also means that cogenerators owned by electric utilities may not be as economically competitive as facilities owned by other parties. This is especially disturbing to the electric utilities, because electricity generation is their primary business.

Furthermore, it is likely that cogeneration's market potential and electricity output would be much greater if utilities were allowed 100 percent unregulated ownership. A study of the cogeneration potential in five industries (representing 75 percent of U.S. industrial steam demand) found that, of a total technical potential of 12,800 MW by 1990, 4,000 MW would be stimulated solely by full utility ownership (2). Similarly, a study by Arkansas Power & Light (AP&L) concluded that the industrial cogeneration potential among 35 high steam load factor customers would be approximately 100 MW of electric capacity under industrial ownership, but up to 1,700 MW under utility ownership (l). The primary reasons for the differences in the amount of cogenerated electricity with utility and nonutility ownership cited by these analyses are that utilities would be more likely to choose technologies with high E/S ratios, and that utilities may require a lower rate of return and often have better access to capital markets than other investors. As a result of the higher electricity production (and thus more power available to the grid) and the better financial position, utilities could find more projects economically attractive. However, without the full PURPA benefits—especially an unregulated rate of return on cogenerated electricity—utilities would not have so much of an incentive to invest.

Finally, allowing 100 percent electric utility ownership under PURPA would lessen utility concerns about competition from cogenerators and the resulting possibility of reduced fixed cost coverage (see ch. 6). AP&L found that if the 35 likely cogeneration candidates in their service area had cogenerated in 1981 under industrial or third-party ownership, AP&L's revenue loss would have been almost $40 million in that year (1). This would mean that rates for their remaining customers would have increased as AP&L's fixed costs would be spread over a smaller number of customers while their income dropped substantially. Utility ownership would protect against such revenue losses and rate increases, and could provide additional revenue streams from steam sales while reducing the rate of increase in retail electricity rates.

As noted above, utility ownership of cogenerators is possible without changes in PURPA or the tax code. Thus, an electric utility could own regulated cogeneration capacity, or it could participate in a joint venture. In either case, some of the advantages of 100 percent unregulated utility ownership would be available, including the potential for greater amounts of installed cogeneration capacity and greater electricity output from cogenerators than under industrial or other private ownership arrangements, and protection from the adverse effects of competition. However, joint ventures may be difficult to arrange, while regulated ownership presents limited financial incentives for investments in cogeneration capacity. The regulated rate of return would, in most States, be the same for cogeneration as for other types of new powerplants (e.g., coal or nuclear) despite the potentially higher administrative costs and investment risks. Allowing utilities to compete for unregulated cogeneration capacity on the same basis as other potential investors would provide utilities with stronger incentives and ensure that the full range of benefits of utility ownership would be available. These incentives would be even greater if the tax treatment were equalized as well.

However, 100 percent utility ownership of cogenerators under PURPA also could have disadvantages. The PURPA ownership rule was enacted in part out of concern that full utility ownership might have anticompetitive effects on the

development of and market for cogeneration technologies. That is, it has been suggested that utilities could "capture" the cogeneration market by favoring their own (or their subsidiaries') projects through more favorable contract terms, priority in contracting (and thus potentially higher energy and/or capacity credits), and less stringent interconnection requirements. Moreover, due to the potential for cross-subsidization, utilities' required rate of return–even if unregulated–could be sufficiently lower than other investors' and thus allow the utilities a competitive advantage. In addition, some opponents of unregulated utility ownership have argued that utilities might tend to favor a limited number of large vendors and manufacturers, with potentially adverse effects on small businesses and the development of advanced technologies.

However, the implementation of cogeneration technologies by utilities can be protected from such anticompetitive effects through carefully drafted legislation and regulations (e.g., similar to the parts of the Energy Security Act that amended the utility provisions of the National Energy Conservation Policy Act), and through traditional administrative and legal remedies. Alternatively, the question of whether utilities should be allowed to own cogenerators under PURPA could be left to the States, with requirements for case-by-case review of ownership schemes by the State regulatory commission prior to their implementation. With carefully drafted legislation and/or State review programs, it is likely that the economic and other benefits of utility ownership would outweigh the potential for anticompetitive effects.

INTERCONNECTION REQUIREMENTS

The interconnection requirements for cogeneration have become an issue for **two reasons: 1) because of the procedures that may be necessary to obtain interconnection, and 2) because of the uncertainty about the amount and type of equipment that will be necessary to protect utility lineworkers and the utility system in general.**

As discussed in chapter 3, the original FERC regulations implementing PURPA required utilities to interconnect with cogenerators as part of the general obligation to purchase power from and sell it to cogeneration facilities. This requirement was overturned by the U.S. Court of Appeals on the grounds that PURPA also included provisions amending the Federal Power Act to establish procedures for obtaining an interconnection order, and that PURPA did not exempt cogeneration systems from this process. Thus, absent a legislative amendment to PURPA, a cogenerator whose utility is unwilling to interconnect (or a utility who wants to interconnect with an unwilling cogenerator) must apply for a FERC order.

FERC may not issue an interconnection order under the Federal Power Act unless the commission determines that the order:

(1) is in the public interest, ***and***
(2) would (a) encourage the overall conservation of energy or capital, or (b) optimize the efficiency of use of facilities or resources, ***or (c)*** improve the reliability of any electric utility system or Federal power marketing agency to which the order applies, ***and***
(3) is not likely to result in a reasonably ascertainable uncompensated economic loss for any electric utility or qualifying cogenerator affected by the order, and
(4 will not place an undue burden on an electric utility or qualifying cogenerator affected by the order, and
(5 will not unreasonably impair the reliability of any electric utility affected by the order, ***and***
(6) will not impair the ability of any electric utility affected by the order-to render adequate service to its customers.

Finally, in issuing an interconnection order, FERC must issue notice to each affected party and afford an opportunity for a full evidentiary hearing under the Administrative Procedure Act.

The requirements under the Federal Power Act will be extremely difficult and expensive for a

cogenerator to meet. Even **in well-understood situations, full evidentiary administrative hearings entail expenses and delays that can pose** a substantial disincentive to applying for an order. But most of the showings listed above are couched in new, broad language that will have to be construed, first, by FERC and then, in all likelihood, by the courts. Moreover, in some cases, a cogenerator will not have access to the data needed to make a particular showing, or only will be able to acquire and analyze the data at great **expense. Thus, these provisions of the Federal** Power Act (as amended by PURPA) pose a substantial deterrent to cogenerators that cannot get an electric utility to interconnect voluntarily—one of the primary obstacles to cogeneration that PURPA was intended to remedy.

in adopting revised regulations to implement the interconnection provisions of the Federal Power Act, FERC can adopt streamlined procedures that minimize the administrative burden on the cogenerator or shift that burden to the utility; the act only specifies that the necessary determinations "shall be based upon a showing of the parties." However, full relief from the Federal Power Act procedures can only come through legislative amendment of the act to specify that interconnection is required in order to make purchases of power from, and sales of power to, cogenerators, or through independent action by each of the State legislatures.

The second area of controversy related to interconnection is the amount and type of equipment required. As discussed in chapter 4, special equipment may be necessary in order to regulate power quality, meter cogenerators' power production and consumption properly, control utility system operations, maintain system stability, and protect utility lineworkers. Given the lack of experience with power flows from cogenerators to the grid, utilities are understandably concerned about proper interconnection. But, with the possible exception of maintaining system stability, the interconnection requirements are relatively well understood, and OTA found no **technical** obstacles to proper interconnection. However, the amount and type of equipment required by the utility (or the State regulatory commission) can be a major **economic issue,** because such equipment can add substantially to the capital cost of a cogeneration system. Few guidelines for interconnection are available (other than those set by utilities), but research is underway to provide the needed information, and several groups are working on interconnection standards (including the Institute of Electrical and Electronics Engineers' Power System Relaying Committee, the Electric Power Research Institute, the Jet Propulsion Laboratory, the Department of Energy's Electrical Energy Systems Division, and the National Electrical Code). Research to date points out the need for performance-based standards that will allow cogenerators to meet functional criteria rather than requiring them to install particular types of equipment that might later be found u necessary.

Better data and additional analysis also are needed to determine the actual costs of proper interconnection. Cost estimates obtained through simulation and other techniques must be verified on actual systems. The State regulatory commissions should encourage those utilities that have not done so to prepare guidelines for interconnection, and to update those guidelines as new data are made available. However, until better data are available, it is likely that both utilities and State regulatory commissions will have to review interconnections on a case-by-case basis to ensure that both the potential hazards to the utility system and the costs to the cogenerator are minimized.

AIR QUALITY IMPACTS

Advocates of cogeneration argue that special treatment for cogeneration under the Clean Air Act would enhance its market potential, because compliance with air quality regulations is cited by many potential cogenerators as a major impediment. Suggested changes that would remove this impediment include, first, setting emissions standards that account for cogenerators' effi-

ciency—either by tying the standards to energy output rather than fuel input or by having separate and more lenient standards for cogenerators; and second, revising new source review procedures under the prevention of significant deterioration and nonattainment area provisions of the Clean Air Act to automatically credit cogenerators for reductions in emissions from the separate thermal and electric energy systems they would replace. The costs of complying with current air quality regulations and the potential impacts of these proposed changes are discussed in detail in chapter 6 and reviewed briefly here.

Both of these policy changes would significantly reduce the costs of pollution control for cogenerators and thus would increase their economic attractiveness. However, cogeneration's fuel efficiency does not always lead to reduced emissions, nor does its substitution for two separate energy systems always produce a net air quality benefit.

In general, improved fuel efficiency will lead to reduced emissions from electricity generation only when a cogenerator replaces an electric generator of the same size and type. Thus, if the cogenerator involves new technology or fuel substitutions, or a change in scale, the net result may be an emissions increase. Even if emissions are reduced, that reduction may occur at a different location and the cogenerator could still have a negative impact on local air quality (e.g., reduced emissions at a rural powerplant but higher ambient concentrations around an urban cogenerator). Finally, cogenerators may involve a change in the type of emissions (e.g., reduced sulfur oxide emissions from a coal burning facility but increased emissions of potentially toxic diesel particulate).

Moreover, those technologies that are most likely to contribute to air quality problems–small steam and combustion turbines and diesel and spark-ignition engines—are the least likely to be controlled. At present, Federal New Source Performance Standards only apply to steam turbines larger than about 25 MW and gas turbines larger than around 10 MW. Standards for diesel nitrogen oxide emissions were proposed, but withdrawn. The emissions characteristics of unregulated technologies vary widely among different engine models, and cogeneration systems must be carefully designed, sited, and controlled to avoid adverse air quality impacts. Control technologies do exist for smaller steam and gas turbines and for diesels, but their effectiveness and costs also vary widely, and their use currently is not mandated by Federal law.

As a result of these considerations, there appears to be little public health or environmental justification for automatically granting cogenerators relief from air quality regulations. Rather, such relief might be afforded on a case-by-case basis to those cogenerators that can demonstrate air quality benefits. Moreover, the special air pollution problems posed by cogenerators that are not regulated under the Clean Air Act (either because of their size or the type of technology) may require more stringent review by State or local agencies—a task those agencies may be ill--equipped to handle.

RESEARCH AND DEVELOPMENT

Federal R&D support for energy technologies is in a state of flux and OTA was not able to analyze the direction of current research and development (R&D) efforts for cogeneration and related combustion systems. Based on OTA's assessment of cogeneration technologies and opportunities, however, it is believed that high priority should be given to funding or encouraging the development of systems with a low capital cost and a high E/S ratio that can burn fuels other than oil and natural gas cleanly. The promising applications identified in chapter 4 include the gasification of coal, biomass, or wastes for use in combustion turbines or combined cycles; fluidized bed combustion systems that can be used in conjunction with steam or combustion turbines; direct-fired combustion turbines using solid fuels (pulverized coal or wood); and advanced technologies such as fuel cells, organic Rankine bottoming cycles, and Stirling engines.

Additional R&D also is needed on the effects of a large number of dispersed generating sources on utility system stability, and for the development of low-cost effective emission controls for smaller cogeneration systems.

SUMMARY

Federal policy on cogeneration **generally en**courages grid-connected applications that can save oil or natural gas while promoting the efficient use of economic and electric utility resources and protecting public health and the environment. In most cases, these policies will have the intended effects. However, special circumstances may mean that some cogeneration applications could increase oil use, or have adverse economic impacts on already financially troubled electric utilities, or lead to local air quality problems. options for closing these gaps in current Federal policy initiatives are summarized in table 70. Although some of these options would require congressional action, most are relatively easy to implement (i.e., low administrative costs, few additional regulations).

Cogeneration can make an important contribution to the Nation's transition to the efficient use of fuels other than oil and gas while providing important economic benefits. But achieving the maximum benefits from cogeneration—and avoiding its potential drawbacks—will require innovation in technologies, financial markets, and utility management. And, until more experience is gained with cogeneration under the current energy, economic, and environmental context, it will require careful planning. This includes careful selection of cogeneration technologies as well as careful design and siting to ensure that the needs of both the thermal energy user and the local utility are met at an attractive cost and with minimum environmental impacts. In most cases, such planning can be achieved easily if early cooperation among all concerned parties-potential cogenerators, utilities, and Government agencies—is secured. Some utilities and State and local agencies already have initiated cooperative planning programs designed to maximize cogeneration's market potential and energy and economic benefits. Others are bound to follow as soon as they recognize that such planning is in their interests.

Table 70.—Summary of Policy Considerations Related to Cogeneration

Options	Government action required to implement options	Potential impact of options	Administrative cost
Policy Issue 1: Posslbillty that oil-fired cogeneration would increase Oil use			
A. Require oil-fired cogenerators to demonstrate net oil savings in order to qualify for PURPA benefits	Amend FERC regulations implementing PURPA	Would not block all of the oil-fired cogenerators that could increase oil use; may discourage some that would save oil	Potentially high for both FERC and oil-fired cogenerators
B. Prohibit the use of oil in all cogenerators unless net oil savings are demonstrated	Congressional action to amend FUA, plus agency implementation	Would block all cogenerators that could increase oil use; may discourage some that would save oil	Potentially low for implementing agency and high for oil-fired cogenerators
C. Deny energy tax credits for oil-fired cogenerators	Congressional action to amend tax code plus IRS implementation	Would provide further economic disincentive to oil-fired cogeneration, even when it would save oil	Low for both IRS and cogenerators
D. Encourage use of natural gas instead of oil	Same as 1A-C, but in each case specifically allowing natural gas-fired cogeneration	Would effectively block oil-fired cogeneration while providing market incentives to gas-fired; would complement existing policies that encourage conversion to alternate fuels; could lock cogenerators into natural gas use, increasing supply pressure over time	Agency costs same as 1A-C, oil-fired cogenerator costs high; gas-fired low
E. Oil tax (e.g., import tax or user fee)	Congressional action to amend tax code	Would encourage oil conservation in, all markets, provide additional Federal revenues	Relatively low
Policy issue 2 Denial of equal benefits for utiiity-owned cogenerators under PURPA and the tax *code*			
A. Allow 100 percent utility-owned cogenerators to qualify for PURPA benefits	Congressional action to amend PURPA plus FERC implementation	Could: increase cogeneration market penetration and electricity production; reduce rate of growth in electric rates; improve financial health of electric utilities; provide insurance against unexpected changes in demand growth. Also could have anticompetitive effects on the cogeneration market and on technology development and implementation, unless legislation were drafted carefully and/or State review programs were mandated	Low for implementation. Possibly high for monitoring potential anticompetitive effects
B. Allow energy tax credit for utility-owned cogenerators	Congressional action to amend tax code plus IRS implementation	Could stimulate utility investment with same effects as 2A	No greater than for existing energy tax credit
Policy issue 3: Tax incentive for investment in cogeneration expires in 1932			
A. Extend energy tax credit to 1990	Congressional action to amend tax code plus IRS implementation	Would provide continued stimulus to investment; allow time for advanced technologies to become commercial	Continuation of workload under present tax credit

Table 70.—Summary of Policy Considerations Related to Cogeneration—Continued

Options	Government action required to implement options	Potential impact of options	Administrative cost
Policy issue 4: Compliance with air quality regulations is a major impediment to cogeneration development			
A. Set emissions standards that account for cogenerators' greater fuel efficiency	Congressional action to amend Clean Air Act plus EPA and State implementation	Would reduce costs-of emissions control. Could result in net emissions increase, especially in urban areas	Possibly lower than under existing regulations
B. Revise new source review procedures to automatically credit cogenerators for reductions in emissions from the separate technologies they would displace	Congressional action to amend Clean Air Act plus EPA and State implementation	Would reduce costs to cogenerator of performing air quality modeling and securing offsets. Could result in net emissions increase at cogeneration site	Would shift costs previously borne by cogenerators to already understaffed State agencies
Policy issue 5: Rates for purchases of cogenerated power are uncertain			
A. Amend PURPA to set rates at 100 percent of utilities' avoided cost	Congressional action to amend PURPA	Would provide major economic incentive to cogeneration without reducing rates to other utility customers	Same as under present regulations
B. Revise FERC regulations to set rates according to regional opportunities for oil/gas and cost savings	FERC implementation	In some areas would provide less economic incentive than 5A, but would share economic benefits with ratepayers	Initially slightly higher than present regulations
Policy Issue 6: Interconnection procedures can pose substantial disincentive			
A. Redraft FERC regulations to shift evidentiary burden to utilities	FERC implementation	Would minimize procedural burden on cogenerators to obtain interconnection	Costly for FERC, cogenerators, and utilities
B. Amend Federal Power Act to require interconnection	Congressional action to amend Federal Power Act	Would eliminate procedural burden	Minimal
Policy issue 7: Interconnection requirements can substantially increase cogeneration capital costs			
A. Accelerate research and encourage utilities and State regulatory commissions to establish performance-based standards	More aggressive FERC implementation	Will reduce uncertainty for cogenerator	Minimal

SOURCE: Office of Technology Assessment.

CHAPTER 7 REFERENCES

1. Mitchell, Ralph C, III, Arkansas Power& Light, private communication to OTA, Nov. 19, 1981.
2. Resource Planning Associates, *The Potential for Cogeneration Development by 1990* (RPA Reference No: RA-81 -1455; July 31, 1981).
3. 16 U.S.C. 796 (Public Law 95-61 7).
4. 45 Fed. Reg. 17959, at 17963 (Mar. 20, 1980).

Appendixes

Appendix A
Dispersed Electricity Technology Assessment (DELTA) Model

The DELTA model is a linear programing mathematical model used to calculate the costs of satisfying electric, heating, and cooling demands of a particular electric utility, given the capital equipment in operation in 1980. The model computes a capacity expansion plan that minimizes the time-discounted sum of capital, operating, and fuel costs.

This appendix is divided into three sections: first, a description of the major assumptions used in the formulation of the model; second, a list of all the variables and notations used in the model equation set; and third, the equation-by-equation description.

Major Assumptions and Model Formulation

All of the major assumptions used in the DELTA model are described in chapter 5. They are summarized below:

First, the model uses the linear programing type of mathematical programing in its representation of the utility system. Second, the model only simulates cogeneration that is connected to the grid. Third, the model divides the entire commercial sector into three subsectors corresponding to three types of demand patterns: multifamily, hospitals/hotels, and 9-to-5 office buildings. Fourth, the model uses the eight different types of daily load cycles in its representation of electrical, heating, and cooling demands, Fifth, the model has two different types of fuel price paths. Sixth, three different sample utility systems were used. Seventh, different assumptions were made to represent the various technologies, the way they operate, and the financial structure of the utility region.

As mentioned in chapter 5, the model uses three types of energy demands—electrical, thermal heating, and cooling—that must be met by a combination of electrical and thermal generation. A schematic for the general structure of the model (for a particular subsector) is given in figure A-1.

Figure A-1.—DELTA Model Structure

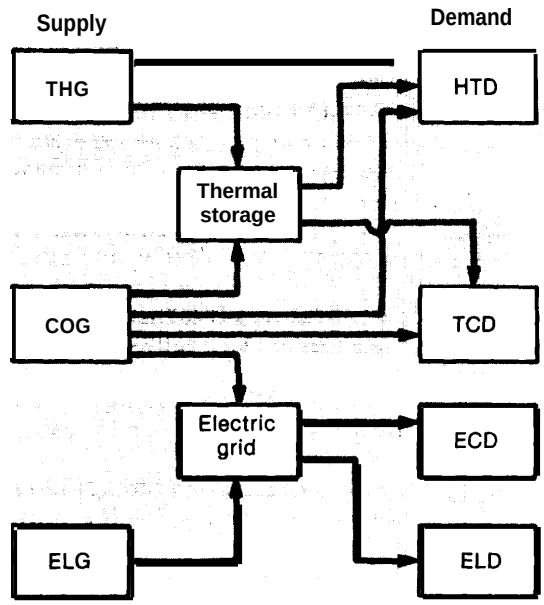

SOURCE: Office of Technology Assessment,

Notation And Variables Used

Each variable (representing particular activities of a utility) may have up to five subscripts for its mathematical shorthand. The subscripts are:

- n— for each centralized technology type [e.g., n = 1 (baseload), n=2 (intermediate), n=3 (peaking)];
- s– for subsector (multifamily, hospitals/hotels, 9-to-S office buildings);
- y– for time period (O is 1980, 1 is 1990, 2 is 2000);
- d– for the day type (eight different ones, e.g., peak summer weekend day); and
- h– for the hour of the day represented.

For each individual dispersed type of technology represented and each subsectors and year, day, and hour y, d, h, we represent the various activities with the following mathematical shorthand. Power output is measured in megawatt hours, while capacity is measured in megawatts. One thermal megawatt is equal to 3.412 million Btu/hr.

- COG_{sydh} is the cogeneration electrical power output in subsector s at time y, d, h.
- coc_{sy} is the cogeneration power capacity in subsector s at year y.
- THG_{sydh} is the electrical heating power generation in subsector s at time y, d, h.
- THC_{sy} is the electrical heating power capacity in subsector s at year y.
- ECD_{sydh} is the electric air conditioning output in subsector s at time y, d, h.

ECC_{sy} is the electric air conditioning capacity in subsector s at year y.

TCD_{sydh} is the thermal (absorptive) air conditioning output in subsector s at time y, d, h.

TCC_{sy} is the thermal (absorptive) air conditioning capacity in subsector s at year y.

SPH_{sydh} is the thermal heating output in subsector s in time y, d, h.

There are also the electrical generation variables, that are represented for the different types of centralized technologies n and time y, d, h:

ELG_{nydh} is the central electric power generation for technology n and time y, d, h (measured in MWh).

ELC_{ny} is the central electric power capacity for technology n and year y (measured in MW).

Finally, there are three variables that represent the thermal storage activities for each subsectors and time y, d, h:

TOT_{sydh} is the dispersed thermal storage output for subsectors and time y, d, h (measured in MWh).

TIN_{sydh} is the dispersed thermal storage input for subsectors and time y,d, h (measured in MWh).

TEC_{sy} is the dispersed thermal storage energy capacity for subsectors and year y (measured in MW).

The input and output variables are measured in megawatts, while the capacity is measured in megawatt-hours.

The various technological characteristics are abbreviated mathematically with the following shorthand:

A_n is the availability of equipment of technology type n to provide power.

MAN_{nYd} is the amount of time that technology type n is out of service for maintenance in year y and day d.

C(.) is the annual capital cost or operating cost for each capacity activity variable (.)

$DISC_Y$ is the real discount factor for both capital and operating costs.

The three types of energy demands are abbreviated:

ELD_{ydh} is electrical demand in time y, d, h.

CLD_{sydh} is the thermal cooling demand for subsector s in time y, d, h.

HTD_{sydh} is the thermal heating demand for subsector s in time y, d, h.

The DELTA model is fixed for certain time periods, with ND_d being the number of days per year of day type d.

Equation Description

As in standard with linear programing-type of formulations, we divide our description of the equations into two parts: first a description of the objective function and then the constraints.

Objective Function

The objective function is to minimize the sum of discounted (over the time period of the model back to 1980 dollars) the annual costs of operation and capacity of electric generation, cooling, heating, and the costs of thermal storage. The mathematical description of the objective function is:

$$\min \sum_{y=1}^{z} (DISC_y * \sum_d ND_d * \sum_h \{ \sum_n ELG_{nydh} * C(ELG) + \sum_s COG_{sydh} * C(COG) + \sum_s [THG_{sydh} * C(THG) + ECD_{sydh} * C(ECD) + TCD_{sydh} * C(TCD) + TOT_{sydh} * C(TOT)] \} + DISC_y * \{ \sum_n ELC_{ny} C(ELC) + \sum_s [COC_{sy} * C(COC) + THC_{sy} * C(THC) + ECC_{sy} * C(ECC) + TCC_{sy} * C(TCC) + TEC_{sy} * C(TEC)] \})$$

Equation Set

There are eight different types of equations in the DELTA model: electric demands, cooling energy demands, heating energy demands, capacity availability, thermal storage capacity, thermal storage availability, reserve margin, and maintenance scheduling.

ELECTRIC DEMANDS

Electric demands must be met in hour h of day type d in each year y. The electric air-conditioning demand (ECD) needs to be divided by the air conditioner's coefficient of performance (3.0). Electric demands are satisfied with centralized generation equipment and cogenerators:

$$\sum_n ELG_{nydh} + \sum_s COG_{sydh} \geq \sum_s (ECD_{sydh}/3.0) + ELD_{ydh} \text{ for all y, d, h.}$$

COOLING ENERGY DEMANDS

For each subsector, the cooling demand CLD must be satisfied by the output of the electric cooling devices (ECD) and thermal cooling devices (TCD):

$$ECD_{sydh} + TCD_{sydh} \geq CLD_{sydh} \text{ for all s, y, d, h.}$$

HEATING ENERGY DEMANDS

For each subsector, the combined output of the thermal generators (THG), cogenerator (COG), and thermal storage (TOT) must meet or exceed the in-

puts to thermal storage (TIN) plus heating demands and thermal cooling devices (TCD). The cogeneration output is multiplied by the ratio of steam to electricity (1.29) and the thermal cooling output is multiplied by its coefficient of performance (.67):

$$THG_{sydh} + (COG_{sydh} * 1.29) + TOT_{sydh} \geq TIN_{sydh} + HTD_{sydh} + (TCD_{sydg}/0.67) \text{ for all s, y, d, h.}$$

CAPACITY AVAILABILITY

The output of each electrical and thermal generator must not exceed its available capacity. This available capacity is defined as 1980 capacity plus additions in future years minus the amount of capacity removed for maintenance (MAN). In order to sum up all capacity additions, the mathematical shorthand uses the subscript i, ranging from 0 to the value of the year subscript y. There are five types of equations for capacity:

Electric capacity:

$$ELG_{nydh} \leq A_n * \sum_{i=0}^{y} (ELC_{ni} - MAN_{nyd}) \text{ for all n, y, d, h}$$

ELC_{n0} is set at initial 1980 capacity (input)

Thermal capacity:

$$THG_{sydh} \leq (0.95) * \sum_{i=0}^{y} THC_{si} \text{ for all s, y, d, h}$$

$THC_{s0} = 0$ for all s (Initial 1980 capacity is set at zero)

Cogeneration capacity:

$$COG_{sydh} \leq (0.95) * \sum_{i=0}^{y} COC_{si} \text{ for all s, y, d, h}$$

$COC_{s0} = 0$ for all s (Initial 1980 capacity is set at zero)

Electric cooling capacity:

$$ECD_{sydh} \leq (0.95) * \sum_{i=0}^{y} ECC_{si} \text{ for all s, y, d, h} \qquad ECC_{s0} = 0 \text{ for all s}$$

Thermal cooling capacity:

$$TCD_{sydh} \leq (0.95) * \sum_{i=0}^{y} TCC_{si} \text{ for all s, y, d, h}$$

$TCC_{s0} = 0$ for all s

THERMAL STORAGE CAPACITY

Thermal storage capacity (TEC) equals or exceeds daily storage multiplied by the efficiency of the storage (0.90) for each subsector s:

$$(0.90) * \sum_{h} TIN_{sydh} \leq \sum_{i=0}^{y} TEC_{si} \text{ for all s, y, d}$$

THERMAL STORAGE AVAIALBILITY

Thermal energy output must not exceed storage during that particular day multiplied by the storage efficiency (0.90):

$$\sum_{h} TOT_{sydh} \leq (0.90) * \sum_{h} TIN_{sydh} \text{ for all s, y, d}$$

RESERVE MARGIN

Centralized electric capacity plus cogeneration capacity equals or exceeds peak demands times 1.20 (a 20 percent reserve margin):

$$\sum_{n} \sum_{i=0}^{y} (ELC_{ni} - MAN_{nyd}) + \sum_{s} \sum_{i=0}^{y} COC_{si} \geq (1.20) * \sum_{s} (ECD_{sydh}/3.0) + ELD_{ydh} \text{ for peak hours, peak days, and all y}$$

MAINTENANCE SCHEDULING

The scheduled maintenance of baseload and intermediate generation capacity equals or exceeds the scheduled maintenance required annually. Each capacity type needs to be maintained for 10 percent of the year, or 876 hours:

$$24 * \sum_{d} (ND_d * MAN_{nyd}) \geq 876 * \sum_{i=0}^{y} ELC_{ni} \text{ for all y and n = 1, 2}$$

98-946 O - 83 - 20 : QL 3

Appendix B
Emissions Changes

A number of analyses of emissions changes caused by cogeneration have been conducted. All of these **analyses, however, are site-specific and do not illustrate the effects of changing critical assumptions, or they have extrapolated to regional or national emissions changes by using simplifying assumptions about critical parameters (e.g., the type of fuels "backed out" of the utilities' centralized systems) that may be significantly in error.**

The following tables display the emissions attributable to each component in a possible switch from a system using central station-generated electricity and a local heat source to a system using cogeneration. A number of options for the central plant, cogenerator, and heat source are shown in order to allow a range of circumstances to be evaluated. Because of the significant variation possible in each of the components (for **example, the thermal efficiencies and emissions**

Table B-l.—Emissions From Cogenerator Options

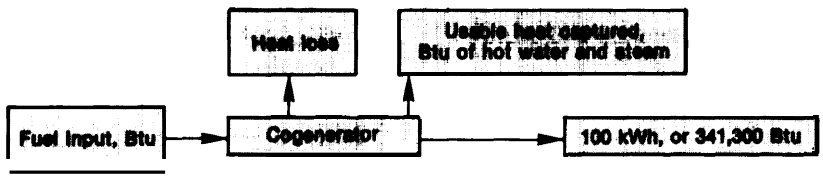

Type	Fuel Input	Heat captured[a]	Thermal efficiency	Emissions (lb/100 kWh) NO_x	Particulate	CO	HC	So_x[b]	Comment
Diesel	990,000[c]	350,000[c]	0.70[d]	3.43[e]	0.07[f]	owe	O.IO[e]	0.29	Oil, Uric.
				2.49[e]	ND	0.64*	0.87[e]	0.02[g] Dual	Fuel, Uric.
				2.20[h]	NS	NS	NS	NS	NSPS
Gas turbine	1,365,000	610,000	0.70[k]	.8	0.03[m]	0.15[m]	0.05[m]	O.OI[m]	Gas, Unc.
				1.2	0.08[n]	0.03	0.05	0.2[g]	Oil, Unc.
				0.4[o]	NS	NS	NS	1.09	NSPS
NSPS steam turbine	2,970,000P	2,000,000P	0.79P	2.08[q]	0.30[q]	0.12	0.03	3.56[q]	Coal
				0.89[q]	0.30[q]	NEG	0.03	2.38q	oil
				0.59[q]	0.03	NEG	0.12	0.21	Gas

ND - No data found
NS - No standard
NEG - Negligible

aUnless the cogeneratlng system has heat storage capability and/or very careful balancing of heat production and actual need, less heat than this will be *usefully* captured, the system efficiency will decrease, and the overall emissions balance between cogeneratlon end the central station power/local heating source will worsen.
b values for So_x are entirely fuel dependent, Essentially 100 percent of the sulfur contained in the fuel is transformed into SO_x upon combustion.
c Based on fuel rate data in Environment Protection Agency, Standards Support and Environmental Impact Statement for Stationary Internal Combustion Engines, draft, EPA-450/2-78-125a July 1979, assuming 95 percent generator efficiency.
dTh data sources did not converge on any efficiency value as "best," but values ranged from 62 to 80 percent. The major source Of variability appears to be the amount of heat captured rather than the total fuel input.
eBased on sales-weighted averages for large-bore diesels, data In EPA, op. cit. (note c).
fEnvironmental Protection Agency, *Compilation of Air Pollutant Emission Factors* (AP-42), 1978.
gAssumes 0.2 percent sulfur diesel fuel or distillate oil.
hTh, New Source Performance Standard for diesels burning oil or oil/natural gas combinations is 600 ppm of NO_x. This is *roughly* translatable into about 7 grams per horsepower hour, or about 2.2 lb/MMBtu, personal communication from Douglas Bell, Office of Air Quality Planning and Standards, Research Triangle Park, N.C.
iThe application of NO_x emission controls may have an effect on emissions of other pollutants. Because efficiency may decrease somewhat with such controls the effect on CO and HC may be adverse.
jTotal fuel input and heat captured in a gas turbine cogenerator are extremely variable. Data shown are from ICF, Inc., *A Technical and Economic Evaluation of Dispersed Electric Generation Technologies,* draft final report to OTA, October 19S0, table 3-3, simple-cycle turbine.
kIbid, pages. With the "typical" turbine in General Accounting Office, *Industrial Cogeneration—What it Is, How it Works, Its Potential,* EMD-80-7, Apr. 29, 1960.
lEnvironmental Protection Agency, *Standards Support and Environmental Impact Statement* for Stationary Gas Turbines, EPA-450/2-77-017a, September 1977, PP. 3-110, for "typical," uncontrolled turbines.
mEnvironmental protection Agency, AP-42, op. cit. (note f). Note that the AP-42 value for NO is ∧∿!b/MMBtu V. 0.6 lb/MMBtu fOr EPA, OP. cit. (note l).
nFew data were found. This value applies to a GE 7821 B combustion turbine, cited in J. A, Taylor, *An Air @@l~ Assessment for ICES Options,* Argonne National Laboratory, September 1960, draft.
oThe New Source Performance Standard for gas turbines is 75 ppm of NO_x, roughly translatable into about 0.225 to 0.3 lb/MMBtu, personal communication from Douglas Bell, OAQPS, RTP, N.C. Table 3-11 in EPA, op. cit. (note 1) equates 75 pm at 15 percent oxygen to 0.3 lb/MMBtu, but the significant variability in fuel rates of gee turbines implies a range of "lb/MMBtu" rates.
pFrom General Accounting Office, 1980, op. cit., (note k), p. 92. Because a steam turbine may be designed to convert anywhere from zero to over 30 percent of its fuel energy to electricity, these values represent only one possible combination in an extremely broad range.
q40 CFR 60 subpt. D, NSPS for steam generators other than utility over 73 MW input. Generators smaller than this size are subject to State implementation plan regulations.

SOURCE: Office of Technology Assessment.

from a gas turbine or diesel can vary over a fairly wide range), however, the tables capture only a portion of the potential variability in emissions balances.

The values of energy flow and emissions displayed are normalized to an "electrical output of 100 kiloWatt-hours. Emission "balances" for particular combinations of cogenerator, central power facility, and local heat source can be calculated by using the formula:

(net emissions in lbs/100 kWh of cogenerated power) = (cogenerator emissions, table B-1) – (central station power emissions, table B-2) – (hot water and steam emission factor, table B-3)* (heat captured, table B-l/l O,)

Table B-2.—Emissions From Central Station Power Stations (to provide 100 kWh of delivered power)

Type	Fuel input	Emissions[a], lb/100 kWh NO_x	Part	CO	HC	SO_x
Coal-fired powerpiant, NSPS, scrubber	1,1OO,000 [b]	0.55	0.03	0.04	0.01	1.32'
Oider coal-fired plant, 3°/0 sulfur IO% ash with 95% control, 13,000 Btu/lb	1,000,000	0.69	0,31	0.04	0.01	4.38
Oil-fired plant, NSPS, low sulfur oii.	1,000,000	0.30	0.03	0.04	0.01	0.80
Older oii-fired plant, 1 % sulfur.	1,000,000	0.70	0.05	0.04	0.01	1.05
Older natural gas-fired plant	1,000,000	0.67	0.01	0.02	0.04	NEG.
Existing gas turbine peaking plants	I,IOO,OOO[d]	0.43 (.66)[e]	0.01	0.12	NEG.	NEG. Gas
Existing gas turbine peaking plants	I,IOO,OOO[d]	0.53 (.99)[e]	0.04	0.12	0.04	0.03 Oii
NSPS gas turbine		0.3				

[a]Emissions from the following source:ı) Compilation of Air Pollutant Emission Factors, Third Editlon, Environmental protection Agency, August 1977; and 2) Federal Regulations 40 CFR, Part 60, defining New Source Performance Standards for Fossil-fueled steam-electric powerplants.

[b]The higher heat rate is accounted for by the efficiency loss caused by the scrubber.

[c]Assumes high sulfur coal. Requirement for continuous control systems achieving 70 to 90 percent efficiency would reduce SO_x emissions to as low as 0.6 lb/MMBtu for low to medium sulfur coals.

[d]Although gas turbine rates are quite variable, the larger GE and Westinghouse turbines (over 50 MW) tend to have fuel rates between 10,500 and and 12,000 Btu/kWh, Environmental Protection Agency, *Standards* Support and *Environmental Impacts Statement for Stationary* Gas *Turbines,* EPA-450/77-017a, September 1977, pp. 3-46.

[e]The first values are those given in footnote al. above, the second are "typical" values for a range of turbines given in EPA, 1977, op. cit. (footnote d). An examination of turbine data (Ibid., pp. 3-46) indicates that the larger utility turbines do not ap pear to emit nitrogen oxides at a lower unit rate than smaller industrial turbines. The *larger* emissions value is used to construct the emission balances.

SOURCE: Office of Technology Assessment.

Table B-3.—Emissions From Hot Water and Steam Systems (to provide 1,000,000 Btu of usable heat energy)

Heat source	Fuel input	NO_x	Emissions, lb/IO[a] Btu usable heat Particulate	CO	HC	SO_x	
Furnace and hot water heater	1,250,000 Btu	0.12	0.01	0.02	0.01	NEG.	Gas
		0.16	0.02	0.04	0.01	0.24	Oil (.2%S)
NSPS steam boilers.	1,250,000 Btu		0.13	0.05	0.01	1.50	Coal
		0.37	0.13	0.04	0.01	1.00	Oil
		0.25	0.01	0.02	NEG.	NEG.	Gas
Small (<250 x 10° Btu/hr) industrial boiler	1,250,000 Btu	0.72	0.63	0.10	0.05	3.65	Coal[a]
		0.50	0.19	0.04	0.01	1.31	Oil (1%S)
		0.21	0.02	0.02	NEG.	NEG.	Gas

a 10 percent ash, 2 percent sulfur, 13,000 Btu/lb, 90 percent particulate control.

SOURCE: Office of Technology Assessment.

Appendix C
Acronyms, Abbreviations, and Glossary

AC	alternating current
ACRS	accelerated cost recovery system
AEP	American Electric Power Service Corp.
AFB	atmospheric fluidized bed
AFUDC	allowance for funds used during construction
AGA	American Gas Association
APCD	air pollution control district
AP&L	Arkansas Power & Light Co,
APPA	American public Power Association
bbl	barrel
boe	barrels of oil equivalent
Btu	British thermal unit
CAQCA	Colorado Air Quality Control Act
CARB	California Air Resources Board
CEC	California Energy Commission
CEQA	California Environmental Quality Act
CFC	National Rural Utilities Cooperative Finance Corp.
c o	carbon monoxide
ConEd	Consolidated Edison Co. of New York
CPUC	California Public Utilities Commission
CWE	Commonwealth Edison Co,
CWIP	construction work in progress
DC	direct current
DELTA	Dispersed Electricity Technology Assessment model
DOE	Department of Energy
EIA	Energy Information Administration
EIR	environmental impact report (required under CEQA)
EIS	environmental impact statement
EPA	Environmental Protection Agency
EPRI	Electric Power Research Institute
ERTA	Economic Recovery Tax Act of 1981
E/S ratio	electricity-to-steam ratio
FERC	Federal Energy Regulatory Commission
FFB	Federal Financing Bank
FGD	flue gas desulfurization
FUA	Powerplant and Industrial Fuel Use Act of 1978
g	gram
G W	gigawatt
GWh	gigawatthour
HC	hydrocarbon
hph	horsepowerhour
IEEE	Institute of Electrical and Electronics Engineers
I o u	investor-owned utility
1P	Illinois Power Co.
IRS	Internal Revenue Service
ITC	investment tax credit
JPL	Jet Propulsion Laboratory
kv	kilovolt
kVAR	kilovolt-amperes-reactive
kwf	killowatt
kwh	kilowatthour
LAER	lowest achievable emission rate
lb	pound
LRMC	longrun marginal cost
	meter
; C F	million cubic feet
MFBI	major fuel burning installation
MMBD	million barrels per day
MMBtu	million Btu
MSW	municipal solid waste
M W	megawatt
MWh	megawatthour
NAAQS	national ambient air quality standards
NECPA	National Energy Conservation Policy Act of 1978
NEES	New England Electric System
NEPA	National Environmental Policy Act of 1969
NEPOOL	New England Power Pool
NERC	North American Electric Reliability Council
NGPA	Natural Gas Policy Act of 1978
N O	nitrous oxide
$N 0_2$	nitrogen dioxide
$N O_x$	nitrogen oxides
NPDES	National Pollutant Discharge Elimination System
NSPS	new source performance standard
O&M	operation and maintenance
OSHA	Occupational Safety and Health Administration
PFB	pressurized fluidized bed
PG&E	Pacific Gas & Electric Co,
ppm	parts per million
Psc	public service commission
PSD	prevention of significant deterioration (of air quality)
psi	pounds per square inch
psia	psi absolute
psig	psi gauge
Puc	public utilities commission
PUHCA	Public Utility Holding Company Act of 1935
PURPA	Public Utility Regulatory Policies Act of 1978
QF	qualifying facility
REA	Rural Electrification Administration
rpm	revolutions per minute

SCF	standard cubic foot
SEC	Securities and Exchange Commission
SERI	Solar Energy Research Institute
SO_2	sulfur dioxide
SO_x	sulfur oxides
SRMC	shortrun marginal cost
SRP	Salt River Project
TCF	trillion cubic feet
tpy	tons per year
TSP	total suspended particulate
TVA	Tennessee Valley Authority
g	microgram

Glossary

Availability: A measure of the frequency of scheduled outages for generating unit (e.g., for maintenance).

Avoided Cost: The incremental cost to an electric utility of electric energy or capacity or both which, but for the purchase from a cogenerator or small power producer, the utility would generate itself or purchase from another source.

Back-Up Power: Electricity sold to a cogenerator by a utility during unscheduled outages of the cogenerator (e.g., during equipment failure).

Balance of System: The equipment required for a cogeneration system excluding the prime mover (e.g., combustion chamber, environmental controls, fuel handling equipment).

Blowdown: The effluent from boilers and wet cooling systems.

Bottoming Cycle: A cogeneration system in which high-temperature thermal energy is produced first, and then the waste heat is recovered and used to generate electricity or mechanical power plus additional, lower temperature thermal energy,

Capacity Factor: The percent of a year that a generator actually supplies power.

Cooling Tower Drift: The discharge and dispersal of small droplets of water from wet cooling towers.

Dispatching: Control by a utility from a central location of the amount of electricity generated by a powerplant and of its distribution to the point of use.

Diversity: The difference in electricity usage patterns among customers.

Downwash: An aerodynamic wind action that causes stack plumes to be caught around the stack or around neighboring buildings.

Dry Controls: Technological air pollution controls that use a nonliquid control medium.

Dual Fuel System: An engine or boiler that can switch back and forth from one fuel (e.g., coal) to another (e.g., oil) with no technological modification and minimal downtime.

Efficiency: A measure of the amount of energy which is converted to useful work versus how much is wasted.

- ***Fuel Use Efficiency*** for a cogenerator credits the thermal as well as electric output and is expressed as the ratio of electric output plus heat recovered in Btu to fuel input in Btu.
- ***First Law Efficiency*** reflects the simple percentage of fuel input energy that is actually used to produce useful thermal and electric energy, but does not distinguish the relative value of the two outputs.
- Second Law Efficiency recognizes that electricity is a much higher quality form of energy than heat or steam.
- ***Full-Load Electric Etliciency*** is measured when the maximum possible amount of electricity is being produced.
- ***Part-Load Electric Eiliciency*** is measured when less than the maximum possible amount of electricity is being produced.

Electricity-to-Steam Ratio: The proportions of electric and thermal energy produced by a cogenerator, measured in kilowatthours per million Btu of useful thermal energy.

Fumigation: When plumes from either tall or short stacks are forced to ground level by meteorological conditions.

Harmonic Distortion: The production in a power system of one or several frequencies that are multiples of the basic power frequency of 60 cycles per second.

Heat Exchanger: A mechanical device that transfers waste heat from one part of a system (e.g., the turbine) to another medium (e.g., water) for process use.

Heat Rate: A measure of the amount of fuel used to produce electric and/or thermal energy.

- ***Total Heat Rate*** refers to the total amount of fuel (in Btu) required to produce 1 kilowatthour of electricity with no credit given for waste heat use,
- ***Incremental Heat Rate*** is calculated as the additional (or saved) Btu to produce (or not produce) the next kilowatthour of electricity.
- ***Net F/eat Rate*** (also measured in Btu/kWh) credits the thermal output and denotes the energy required to produce electricity, beyond what would be needed to produce a given quanti-

ty of thermal energy in a separate facility (e.g., a boiler).

Induction Generator: A rotating machine in which current supplied by an external alternating current source such as the electric power grid, induces a voltage and current in the rotating part of the machine.

Interest Coverage Ratio: The ratio of a firm's earnings to its current interest obligations.

Interruptible Power: Energy or capacity supplied by a utility to a cogenerator that is subject to interruption by the utility under specified conditions and is normally provided at a lower rate than non-interruptible service if it enables the utility to reduce peakloads.

Inverter: A device for converting direct current to alternating current.

Load: The demand for electric or thermal energy at any particular time.

- ***Base Load*** is the normal, relatively constant demand for energy on a given system.
- ***Peakload*** is the highest demand for energy from a supplying system, measured either daily, seasonally, or annually.
- ***Intermediate Load*** falls between the base and peak.
- ***Load Factor*** is the ratio of the average load over a designated time period to the peak load occurring during that period.
- ***Load Cycle Pattern*** is the variation in demand over a specified period of time.

Maintenance Power: Energy or capacity supplied by a utility during scheduled outages of a cogenerator or small power producer–presumably scheduled when the utility's other load is low.

Market Potential: The number of instances in which a technology will be sufficiently attractive-all things considered—that the investment is likely to be made.

Market-to-Book Ratio: The ratio of the market price of a firm's stock to its book value,

Negative Load: A technique by which utility system controllers subtract the power supplied to the grid by customer-operated generating equipment from the overall system demand and dispatch the utility's generating units to meet the remainder of the demand, rather than dispatching customers' equipment.

Parallel Operation: The automatic export to the utility grid of customer-generated electricity not consumed by the customer's load, such that the same circuits can be served simultaneously by customer—and utility-generated electricity.

Payout Ratio: The ratio of a firm's earnings to its dividends.

Power Factor: A measure of the phase difference between the voltage and current maximums on an electrical circuit.

Prime Mover: The turbine, engine, or other source of mechanical power that is used to turn the rotor of a generator.

Purchase Power: Customer-generated electricity supplied to the grid and purchased by a utility.

Quad: One quadrillion British thermal units (Btu) (approximately 500,000 barrels of oil per day for 1 year, or 50,000,000 tons of coal).

Qualifying Facility: A cogenerator or small power producer that meets the requirements specified in the Public Utility Regulatory Policies Act of 1978–in the case of a cogenerator, one that produces electricity and useful thermal energy for industrial, commercial, heating, or cooling purposes; that meets the operating requirements specified by the Federal Energy Regulatory Commission with respect to such factors as size, fuel use, and fuel efficiency); and that is owned by a person not primarily engaged in the generation or sale of electric power (other than cogenerated power).

Rankine Cycle: The thermodynamic cycle which describes the operating cycle of an actual steam engine.

Rate Base: The net valuation of utility property in service, consisting of the gross valuation minus accrued depreciation.

Regenerator: A device used in a turbine or engine to preheat incoming air or gas by exposing it to the heat of exhaust gases.

Relays: Devices by means of which a change of current or a variation in conditions of an electric circuit causes a change in conditions of or operates another circuit.

- ***Over/Under Relays*** are used to disconnect a generator if its voltage falls outside of a certain range.

Reliability: A measure of the frequency of scheduled and unscheduled outages of a generating unit (e.g., due to equipment failure).

Self-Excitation: The continued operation of induction generators when disconnected from the outside power source.

Simultaneous Purchase and Sale: When a utility purchases all of the electricity generated by a customer at avoided cost rates and sells power to the customer at retail rates; in practice, no actual transmission of power to or from the customer may take place and the amounts "purchased"

and "sold" are calculated from the customer's meter.

Supplementary Power: Capacity required by a cogenerator or small power producer in addition to its own.

Switchgear: All of the necessary relays, wiring, and switches that are used in interconnection equipment.

Synchronous Generator: A prime mover (e.g., turbine, engine) in which the rotor current comes from a separate direct current source on the generator.

Synthesis Gas: A synthetic gas created from a solid or liquid fuel with an energy content of 300 to 400 Btu/SCF.

System Stability: The ability of all generators supplying power to a utility system to stay synchronized after a disturbance (e.g., a fault on part of the power system).

Technical Potential: The number of instances in which a technology is technically suitable or appropriate.

Telemetry Equipment: Used in dispatching to transmit signals from a control center to electrical equipment (e.g. a generator) in the field in order to remotely operate that equipment.

Topping Cycle: A cogenerator in which the electric or mechanical power is produced first, and then the thermal energy exhausted from power production is captured and used.

Transformer: A device for increasing or decreasing the voltage of an alternating electric current.

Dedicated Distribution Transformers: These units connect a single large utility customer directly to a higher voltage distribution line, substation, or transmission network in order to confine voltage flicker problems to the customer's own system.

Urban Meteorology: The conditions surrounding urban buildings that alter normal dispersion of emissions.

Voltage Flicker: Very brief (less than 1 minute) changes power system voltages.

Waste Heat: Thermal energy that is exhausted rather than being captured and used.

Wet Controls: Technological air pollution controls that operate through the injection of water or some other liquid.

Index

Index

Aerospace Research Corp., 145, 207
air-conditioning demand, 54
air pollution control districts (APCDs), 102, 103, 104, 243, 244, 245
Air Pollution Emission Notice (APEN), 101, 102, 244, 245
Alabama, 41, 86, 177, 182
Alaska, 57, 182
Alaska Power Administration, 57
American Electric Power Service Corp. (AEP), 80, 83, 84, 85, 178
American Gas Association (AGA), 189, 190, 196
American Public Power Association (APPA), 150, 159
anaerobic digestion, 13, 215
Arizona, 41, 182
Arkansas, 40, 41, 57, 86, 177, 182
Arkansas Power & Light Co. (AP&L), 109, 183, 258, 274
avoided cost, 39, 40, 41, 79, 80, 81, 82, 98, 99

Babcock & Wilcox, Ltd., 178
Bonneville Power Administration, 56
Bureau of Land Management (BLM), 243, 244
Bureau of Reclamation, 56, 57

California, 12, 32, 33, 40, 41, 81, 86, 90-94, 95, 96, 97, 101, 102, 103, 104, 111, 174, 182, 189, 190, 191, 205, 214, 242, 243, 244, 245, 256, 257
California Air Resources Board (CARB), 102, 104, 235, 244
California Energy Commission (CEC), 90, 91, 104
California Office of Permit Assistance, 102, 104
California Public Utilities Commission (CPUC, 90, 91, 92, 93, 94, 104, 154, 156, 256
California State Clearing House, 103
California Water Resources Control Board, 102
capital requirements, 33, 42, 65, 106
carbon monoxide (CO), 223, 224, 230, 237
Celanese Chemical Co., Pampa, Tex., 172, 173
coal, 144
cogeneration technologies
  air quality considerations, 17, *21, 43, 44, 70,* 100, 101, 102, 103, 221, 222-246, 276-277
  bottoming cycles, 6,8,9,25,27,29,30,33, 77, 122, 175
  capacity, 199
  capital requirements, 33, 42, 65, 106
  centralization and decentralization, 261
  choice of equipment, considerations of, 8
  classification, 6
  closed-cycle gas turbine, 6, 8, 9, 30, 120, 121, 122, 127-129, 239
  combined gas turbine/steam turbine, 8, 9, 28, 120, 121, 122, 129-131, 235
  competition with alternate systems, 31-32, 35
  construction labor requirements, 42
  definition, 25
  diesel, 8, 9, 28, 44, 77, 120, 121, 122, 131-133, 225, 230, 237, 238,
  digesters, 13, 215
  economic considerations, 19, 27, 38, 40, 67, 181, 246-259, 270-273
  efficiency and operating standards, 77
electric storage, 161-163
electricity-to-steam (E/S) ratio, 8, 11, 21, 28, 117, 120, 124
environmental considerations, 16-17, 21, 35, 43-44, 70, 77, 100, 101, 102, 103, 221, 222-246
environmental permit enforcement, 242-246
equipment needed, consideration of, 8
Federal and State regulation, 76-104
final environmental impact statement (FEIS), 78
financing and ownership, 104-112, 182-183
fluidized bed combustion, 31, 32, 35, 142-143, 177, 239
four general questions, 5
fuel cell, 6, 8, 9, 30, 120, 121, 122, 137-139
fuel use, 8, 10, 11, 13, 15, 19, 25, 27, 28, 29, 31, 33, 34, 43, 44, 71, 72, 77, 99, 123, 130, 142-146, 171, 172, 173, 174, 175, 182, 194-196, 206, 213, 223, 238, 258, 259
gasifiers, 13, 21, 31, 32, 143-144, 175-177, 214, 258
grain drying, 211
impacts of, 15-18, 40-42, 43-44
incentives, 10, 19, 20, 35, 38, 39, 40, 41, 67, 107
in commercial buildings, 12, 32, 34, 189-210
industrial applications, 171-178
industrial opportunities, 32-34, 171-188
investment competition, 10
joint ventures, 39
labor requirements, 17, 42, 251, 253
market potential, 10, 38, 184-188, 248, 272
municipal solar utility (MSU), 111
municipal solid waste (MSW), 110, 144, 241, 257
obligation to purchase power, 78
oil savings, 18-19, 25, 267-270
old and proven technology, 3
open-cycle gas turbine, 8, 9, 28, 30, 120, 121, 122, 124, 125, 145
operation and maintenance (O&M) costs, 9, 17, 18, 42, 121, 124, 127, 132, 133, 136, 139, 142, 250, 251, 252, 254
opportunities, 11-13, 34, 198-208
policy considerations, summary of, 18, 279
potential for, 10, 29-31, 178-184, 211
previous studies, 189-190
principal technical advantage, 6
qualifying facilities, 78-85
Rankine cycle, 6, 8, 9, 28, 29, 30, 32, 117, 120, 121, 122, 133-137
regulation of fuel use, 99
relative efficiencies (fig. 2), 7
research and development (R&D), 21, 29, 31, 277
resurgence of interest, 3, 25
retrofits, 33, 202-205
rural opportunities, 13, 210-216
steam turbine, 8, 9, 10, 27, 28, 32, 120, 121, 122, 123, 124, 171, 174
Stirling engine, 6, 8, 9, 30, 31, 120, 121, 139-142
summary of, 8, 120
tax credit and incentives, 19, 20, 34, 38, 67, 68, 69, 105, 106, 109, 183, 272

thermal storage, 159-161
thermodynamic efficiency of, 118-119
topping cycles, 6, 9, 25, 26, 29, 30, 31, 77, 122
use of thermal energy, 25, 31, 32, 33
Colorado, 41, 101, 102, 103, 104, 182, 242, 243, 244, 245
Colorado Department of Health, 242, 243
Columbia River Basin, 56
Commonwealth Edison (CWE), 94-95, 256, 257
comparison of energy demand projections (table 8), 50
ConEd (see Consolidated Edison Co.)
Congress
House of Representatives
Banking, Finance, and Urban Affairs Committee, 5
Energy and Commerce Committee, 5
Science and Technology Committee, 5
Senate
Energy and Natural Resources Committee, 5
Connecticut, 40, 41, 86, 98, 182
conservation, 33, 35, 50, 70
considerations in determining avoided costs under PURPA, by State (table 4), 41
Consolidated Edison Co, (ConEd), 93, 94, 189, 190, 231, 232, 233, 256
Curtiss-Wright Corp., 178

Delaware, 40, 41, 182
DELTA (see Dispersed Electricity Technology Assessment model)
Department of Commerce, 188
Department of Energy (DOE), 99, 159, 178, 185, 187
Secretary of, 71
Electrical Energy Systems Division, 156, 276
Department of Housing and Urban Development (HUD), 105
Dispersed Electricity Technology Assessment (DELTA) model, 190, 191, 192, 193, 196, 197, 198, 201, 209, 283-285
district heating, 163-165
District of Columbia, 41, 182
Dow Chemical Co., 185, 186

economic impact, 40-42
Economic Regulatory Administration, 269
Edison Electric Institute, 50
effects on fuel use, 15
electricity
baseload, 60
costs, 63, 73, 79, 80, 81, 82, 83, 85, 96, 97, 98, 214
distribution system (fig. 11), 62
generating, historical overview, 4
harmonic distortion, 150
peakloads, 60
power demand, 52, 53, 54
power factor correction, 147
power quality, 146
power system statistics (table 10), 55
rates, 62
rates for power purchased from QFs by State-regulated utilities (table 19), 86-89
storage, 161-163
system reliability, 61
U.S. generating capacity, 60, 61
voltage regulation, 148
Electric Power Research Institute (EPRI), 150, 154, 156, 159, 177, 276
electric reliability councils, 57
Electric Reliability Council of Texas, 198
electric utility systems, 55, 56, 59, 61
accelerated cost recovery system (ACRS), 67, 68
capital recovery factor, 106
cooperative utilities, 56, 66, 69, 111
current status, 72-74
economic and regulatory aspects, 62-66
State regulations, 62, 66, 70
Federal regulations, 63, 67, 70
Federal jurisdiction, 67
financing, 64-69, 104
future options, 74-75
generation and transmission co-ops (G&Ts), 56, 64, 66
industrial development bonds (IDBs), 110
investment tax credit (ITC), 67, 68, 69, 109
investor-owned utilities (IOUS), 55, 56, 57, 61, 62, 64, 65, 67, 69, 73, 74, 104, 106, 108, 111
joint action agency, 57
municipal, 61, 64, 65, 67, 109
planning and regulation of, 254-257
power pools, 57
private utilities, 55, 65, 106
public health and welfare regulations, 70
publicly owned utilities, 56, 57, 61, 65, 69
PURPA requirements, 39-40
rate schedule, 63
regulation of fuel use, 71
revenue requirement, 63
rural co-ops, 56, 61, 111
service regulation, 69
taxation, 67, 106
Energy Information Administration (EIA), 50,51,53,54, 196
environmental impact report (EIR), 103
Environmental Protection Agency (EPA), 100, 225, 230, 233, 236, 238, 242
ERTA (see legislation, Economic Recovery Tax Act of 1981)
ethanol, 211
Exxon, 50, 173, 174, 196

Federal Energy Regulatory Commission (FERC), 19, 20, 37, 39, 64, 67, 69, 70, 76, 77, 78, 79, 80, 81, 82, 83, 84, 85, 86, 90, 91, 92, 93, 97, 98, 119, 146, 181, 182, 184, 189, 255, 267, 268, 270, 271, 273, 275, 276
Federal Financing Bank, 66, 112
Federal new source performance standards (NSPSS), 225
Federal Power Commission (FPC), 57, 64, 69
Federal power marketing agencies, 56, 57
FERC (see Federal Energy Regulatory Commission)
Fish and Wildlife Service, Department of the Interior, 71
Florida, 40, 41, 182

General Public Utilities, 74
Georgetown University, Washington, D. C., 239
Georgia, 41, 182

Georgia Power, 151
German Babcock Co., 178
Governor's Task Force on Cogeneration, State of California, 104
Great Britain, 143, 145, 178
gross national product (GNP), 49, 50
Gulf States Utility Co., Baton Rouge, La., 173 174, 188

Holly Sugar Corp., Brawley, Calif., 174, 175

Idaho, 41, 86, 172, 182
Illinois, 41, 86, 90, 94-95, 182
Illinois Commerce Commission (ICC), 94, 95
Illinois Power (1P), 94, 95
implementation of section 210 of PURPA, 86-98
  California, 90
  Colorado, 101
  Illinois, 94-95
  Massachusetts, 97
  New England, 96-98
  New Hampshire, 96, 97
  Vermont, 97
  Indiana, 41, 87, 182
installed industrial capacity
  chemical industry, 11, 172, 174, 179
  food processing industry, 12, 33, 174
  petroleum refining, 11, 12, 173, 179
  pulp and paper industry, 11, 13, 172, 178
  steel industry, 11, 179
Institute of Electrical and Electronics Engineers (IEEE), 156, 159, 276
interconnection, 13, 14, 20, 35, 36, 37, 70, 76, 84, 85, 146-159, 275-276
  cost, 14, 37, 85, 157, 158
  generation dispatch, 152
  guidelines, 155
  liability, 154
  metering, 151
  power factor correction, 147
  power quality, 146
  power regulation problems, 151
  quality of equipment, 154
  regulation, 76
  safety of workers, 14, 36, 153
  system stability, 152
  technical aspects, 36
  voltage regulations, 148
Iowa, 41, 182

Jersey City Total Energy Demonstration Project, 241
Jet Propulsion Laboratory (JPL), 156, 276
Journal of the Air Pollution Control Association (JAPCA), 236, 237

Kansas, 41, 87, 182
Kentucky, 41, 182
Kern County, Calif., 91, 180

latent-heat storage, 159
legislation
  Administrative Procedure Act, 84, 85, 275
  Atomic Energy Act, 70
  California Environmental Quality Act (CEQA), 103, 104
  Clean Air Act, 18, 21, 70, 100, 101, 102, 225, 239, 240, 242, 244, 245, 267, 276, 277
  Clean Water Act, 70, 101, 102, 103, 244
  Coastal Zone Management Act, 71
  Colorado Air Quality Control Act (CAQCA), 101
  Economic Recovery Tax Act of 1981 (ERTA), 68, 104, 105, 106, 107, 188, 259, 267, 273
  Endangered Species Act of 1973, 70
  Energy Security Act of 1980, 104, 105, 275
  Energy Supply and Environmental Coordination Act of 1974, 71
  Energy Tax Act of 1978, 68, 267, 273
  Federal Power Act, 20, 37, 63, 64, 67, 69, 76, 84, 85, 97, 146, 275, 276
  Fish and Wildlife Coordination Act of 1970, 71
  FUA (see Powerplant and Industrial Fuel Use Act of 1978)
  Internal Revenue Code, 68, 105, 109
  National Ambient Air Quality Standards (NAAQS), 100, 101, 225, 236, 237
  National Electrical Code, 156
  National Energy Act of 1978, 5, 71, 76, 104, 268
  National Energy Conservation Policy Act of 1978 (NECPA), 104, 105, 275
  National Environmental Policy Act of 1969 (NEPA), 70, 103, 104
  National Historic Preservation Act of 1970, 70
  National Gas Policy Act (NGPA), 34, 71, 72, 78, 85, 99, 100
  New Hampshire Limited Electrical Energy Producers Act, 97
  Occupational Safety and Health Act (OSHA), 70, 101, 153
  Powerplant and Industrial Fuel Use Act of 1978 (FUA), 18, 19, 27, 34, 71, 72, 78, 85, 99, 100, 102, 184, 206, 267, 268, 269, 270
  Public Utility Holding Company Act of 1935 (PUHCA), 67, 76, 85
  Public Utility Regulatory Policies Act of 1978 (PURPA), 10, 13, 15, 16, 18, 19, 20, 21, 34, 37, 38, 39, 40, 41, 51, 64, 70, 72, 76, 77, 78, 80, 81, 83, 84, 85, 86, 90, 92, 93, 95, 96, 97, 98, 99, 100, 102, 104, 105, 106, 107, 108, 109, 119, 146, 147, 154, 183, 184, 185, 186, 189, 192, 204, 205, 206, 232, 255, 256, 257, 262, 267, 268, 269, 270, 271, 273, 274, 275, 276
  Reclamation Act of 1906, 56
  Resource Conservation and Recovery Act of 1976, 70
  Securities and Exchange Commission Act of 1935, 67
  Windfall Profits Tax Act, 104, 110, 267
Louisiana, 40, 41, 171, 173, 182
Lovins, Amory, 260
lowest achievable emission rate (LAER), 101, 103, 240

Maine, 41, 182
Maryland, 41, 182
Massachusetts, 40, 41, 87, 96, 97, 182
Massachusetts Department of Public Utilities (DPU), 97
methanol, 239
Michigan, 41, 87, 182
Michigan State University, 152
Mid-America Interpool Network, 198
Minnesota, 41, 57, 182
Mississippi, 40, 41, 171, 182
Missouri, 41, 57, 96, 182
Missouri Basin Municipal Power Agency, 57
Montana, 41, 88, 182
Municipal Electric Authority of Georgia, 57

National Academy of Sciences, 237
national energy context, 49-54
National Energy Policy Plan, projection, 50
National Pollutant Discharge Elimination System (NPDES), 101, 102, 103, 243
National Register, 71
National Rural Electric Cooperative Association, 151
National Rural Utilities Cooperative Finance Corp. (CFC), 66
Natural Resources Defense Council, 90
Nebraska, 41, 56, 62, 88, 182
NEPA (see legislation, National Environmental Act of 1969)
Netherlands, Rotterdam, 178
Nevada, 41, 88, 182
New England Electric System (NEES), 97
New England Power, 97, 98
New England Power Pool (NEPOOL), 96, 97, 98
New Hampshire, 40, 41, 88, 96, 97, 98, 182
New Jersey, 40, 41, 88, 178, 179, 182, 187, 189
New Mexico, 41, 182
new source performance standards (NSPSs), 100
New York, 40, 41, 56, 88, 93, 101, 179, 182, 187, 189, 231
New York Public Service Commission (NYPSC), 94, 154, 231, 256
NGPA (see legislation, Natural Gas Policy Act of 1978)
nitrogen oxide (NOX), 17, 44, 100, 102, 103, 223, 224, 225, 228, 230, 231, 232, 233, 235, 237, 238
North American Electric Reliability Council (NERC), 52, 57, 58, 59, 198
North Carolina, 41, 57, 88, 182
North Dakota, 41, 88, 182
Northeast Power Coordinating Council, 198

Occupational Safety and Health Administration (OSHA), 153
Office of Technology Assessment (OTA), 5, 6, 12, 13, 15, 17, 18, 21, 35, 37, 40, 42, 51, 157, 163, 175, 183, 189, 190, 192, 193, 194, 196, 197, 198, 199, 201, 205, 206, 209, 214, 230, 233, 242, 248, 249, 250, 257, 270, 276, 277
Ohio, 41, 178, 182
Oklahoma, 41, 57, 89, 182
Oregon, 41, 89, 182
ownership of cogenerators, 16, 38-39, 77, 106-112

Pacific Gas & Electric (PG&E), 90, 91, 95, 96, 256, 257
Pennsylvania, 41, 171, 182, 189
Philips, N. V., Einhoven, Netherlands, 178
platinum, 138
Potlatch Corp., Lewiston, Idaho, 172, 173
public service commissions (PSCs), 62, 63, 64, 66, 69, 85
public utility commissions (PUCs), 86, 96, 97
PURPA (see legislation, Public Utility Regulatory Policies Act of 1978)

qualifying facilities, 78-98

Radian Corp., 233
references, 21, 44-45, 112-114, 165-167, 216-217, 263-264, 278
Resource Planning Associates, 185
Rhode island, 40, 41, 89, 182
Riverside Cement Co., Oro Grande, Calif., 175
Roosevelt, Franklin, 262
Ruhr Chimie, Oberhausen, Germany, 177
Rural Electrification Administration (REA), 66, 111, 112, 150

Salt River Project (SRP), 148, 149, 150, 151
Seabrook 1, 97
Security and Exchange Commission (SEC), 67
Shell Oil Co., ,178
socioeconomic impacts, 17-18
Solar Energy and Energy Conservation Bank, 105
Solar Energy Research Institute (SERI), 52, 53, 54, 186, 187
South Carolina, 41, 89, 182
South Dakota, 41, 182
Southeastern Power Administration, 57
Southern California Edison, 148, 151, 153, 154, 155, 156, 177, 207, 273
Southern California Gas Co., 108
Southwestern Power Administration, 56
Southwestern Public Service Co., 173
SRI International, 186
Stal-Laval Turbin AB, Sweden, 178
Standard and Poor's, 94
sulfur dioxide (SO_2), 101, 102, 103, 223, 224, 225, 230, 231, 237, 238
Sweden, 178

Tennessee, 41, 182
Tennessee Valley Authority (TVA), 56, 143, 177
Texaco, 177
Texas, 40, 41, 57, 172, 174, 182
Thermo Electron Corp., 178, 185, 186
Three Mile Island (TMI), 74

Union Carbide Corp., Texas City, Tex., 174
U.S. Army Corps of Engineers, 56, 57, 71, 243
U.S. Court of Appeals, 20, 37, 76, 78, 81, 82, 83, 84, 85, 90, 93, 105, 268, 271, 275
U.S. energy demand, 1980, 49-54
  electricity, 52, 53
  natural gas, 51, 52
  oil, 51, 52
  thermal, 53, 54
U.S. Forest Service, 243, 244
U.S. Supreme Court, 76, 82, 85, 105, 271, 272
Urban Development Action Grant (UDAG), 110
urban meteorology, 44, 228
Utah, 41, 89, 182
utility obligations to qualifying facilities
  to interconnect, 84
  to operate in parallel, 84
  to purchase, 78-82
  to sell, 83
  simultaneous purchase and sale, 83
utility ownership, 20, 35, 38, 39, 55, 56, 57, 61, 64, 65, 104, 106-111, 273-275

Vermont, 41, 89, 96, 97, 98, 182
Vermont Public Service Board, 97
Virginia, 41, 145, 182

Washington, 41, 182
Water quality, 17, 241
Western Area Power Administration, 57
West Virginia, 41, 182
Williams, Robert H., 185, 186, 187
Wisconsin, 41, 89, 182
Wood, 144, 171, 213
Wyoming, 41, 89, 172, 182

U. S. GOVERNMENT PRINTING OFFICE : 1983 O - 98-946 : QL 3