The Air Cargo System

January 1982

NTIS order #PB82-186818

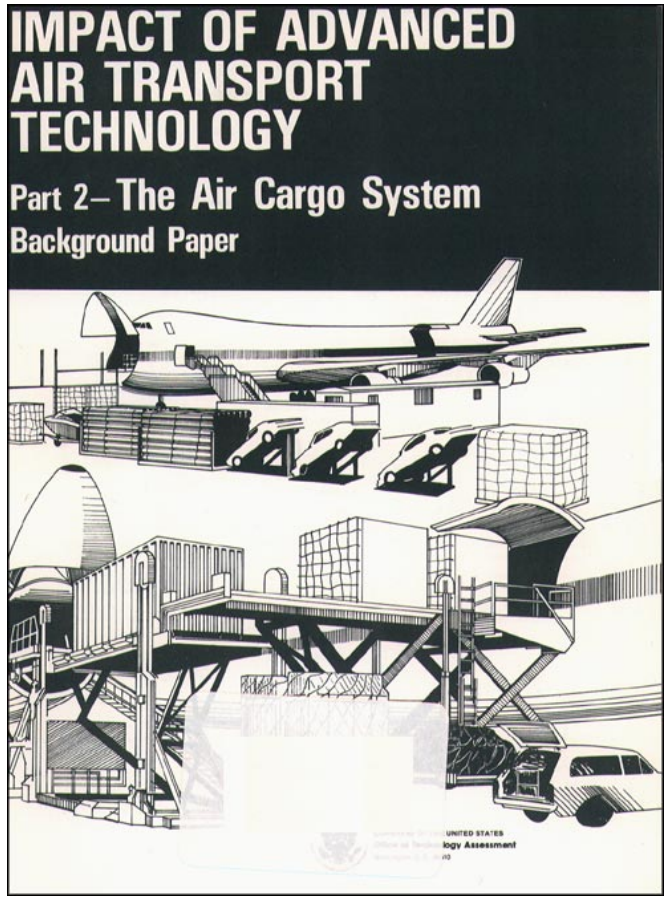

Library of Congress Catalog Card Number 80-600060

For sale by the Superintendent of Documents, U.S. Government Printing Office
Washington, D.C. 20402

Foreword

This background paper is one of four parts of an OTA assessment of the economic, environmental, and societal impacts of advances in the technology of transport aircraft. This paper, Part 2, addresses the air cargo system. It seeks to put in perspective the role and importance of aircraft technology in the total air cargo system. It is not a detailed study of aircraft technology; it focuses instead on the principal factors that could influence the future evolution of air cargo transport.

The overall assessment had its origin in a request from the House Committee on Science and Technology asking OTA to examine the implications of the eventual wide-scale introduction—or nonintroduction—of advanced high-speed passenger aircraft. At the request of the Senate Committee on Commerce, Science, and Transportation, the assessment was subsequently broadened to include the aircraft used in providing service to small communities and to embrace cargo as well as passenger transport.

This paper and the other three parts to this assessment ("Advanced High-Speed Aircraft," "Air Service to Small Communities," and "Financing and Program Alternatives for Advanced High-Speed Aircraft") together comprise OTA's published documents for this study.

In conducting this assessment, OTA was assisted by an advisory panel that provided advice on the overall assessment and a working group focused on air cargo. I would like to thank these individuals for their contributions.

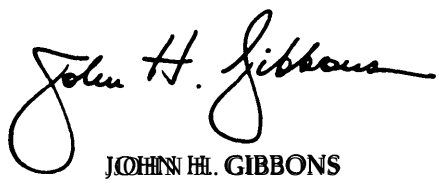

JOHN H. GIBBONS
Director

OTA Advanced Air Transport Technology Assessment Advisory Panel

Robert W. Simpson, Chairman
Director, Flight Transportation Laboratory
Massachusetts Institute of Technology

Jane H. Bartlett
President
Arlington County League of Women Voters

Ray E. Bates
Vice President
Douglas Aircraft Co.

Norman Bradburn
Director
National Opinion Research Center

Frederick W. Bradley, Jr.
Vice President
Citibank, N.A.

John G. Borger
Vice President
Pan American World Airways, Inc.

Secor D. Browne
Secor D. Browne Associates, Inc.

F. A. Cleveland
Vice President
Lockheed Aircraft Corp.

Elwood T. Driver
Vice Chairman
National Transportation Safety Board

James C. Fletcher
Burroughs Corp.

William K. Reilly
President
The Conservation Foundation

David S. Stempler
Chairman, Government Affairs Committee of the Board of Directors
Airline Passengers Association, Inc.

Janet St. Mark
President
SMS Associates

John Wild
Executive Director
National Transportation Policy Study Commission*

Holden W. Withington
Vice President
Boeing Commercial Airplane Co.

Michael Yarymovych
Vice President
Rockwell International

Observers:

Charles R. Foster
Associate Administrator for Aviation Standards
Federal Aviation Administration

James J. Kramer**
Associate Administrator for Aeronautics and Space Technology
National Aeronautics and Space Administration

NOTE: The Advisory Panel provided advice and comment throughout the assessment, but the members do not necessarily approve, disapprove, or endorse the report for which OTA assumes full responsibility.

'Commission was dissolved Dec 31, 1979.
**Resigned from panel during conduct of study after leaving National Aeronautics and Space Administration

OTA Air Cargo Project Staff

John Andelin, *Assistant Director, OTA*
Science, Information, and Natural Resources Division

Yupo Chan William Mills Marsha Mistretta Jacquelynne Mulder
David Seidman Paula Walden Richard Willow

Contractors

M. Karen Gamble James Gorham Dorothea Gross
John Vaughan Arthur L. Webster

OTA Publishing Staff

John C. Holmes, *Publishing Officer*
John Bergling Kathie S. Boss Debra M. Datcher Joe Henson

Air Cargo Working Group

Keith G. Brady
Manager, Innovative Concepts Development
Boeing Commercial Airplane Co.

Tulinda Deegan
Director, Government Relations
Commuter Airline Association of America

Leo F. Duggan
Vice President, Technical Affairs
Airport Operations Council International

Douglas A. Fisher
Assistant General Manager
Emery Air Freight

Joel H. Fisher
Director and *Washington Counsel*
Seaboard World Airlines

E. R. Hichens
Manager, Traffic Systems
Sears Roebuck and Co.

William H. Kuhlman
Cargo *Market Development*
Douglas Aircraft Co.

Dennis J. Marshall
Manager, Development and Operation Engineering
Federal Express Corp.

William T. Mikolowsky
Manager, Operation Research Department
Lockheed Georgia Co.

George A. Pasquet
U.S. Air Force
Military Airlift Command

William F. Pieper
Director, Technology Development
Flying Tiger Line

Ray Siewert
OSD/OUSDR&E (ET)
Department of Defense

Nawal K. Taneja
Flight Transportation Laboratory
Department of Aeronautics and Astronautics
Massachusetts Institute of Technology

Matthew M. Winston
Langley Research Center
National Aeronautics and Space Administration

Shirley Ybarra
Vice President
Simat, Helliesen, & Eichner

Contents

Chapter		Page
1.	**Summary**	3
	Growth Rate	3
	Dedicated v. Derivative Aircraft	3
	Ground Operations	3
	Industry Problems	4
	Lighter-Than-AirVehicles	4
	Deregulation	4
	Federal Policy	5
2.	**An Overview of the Air Cargo System**	9
	Introduction	9
	Air Cargo Industry Structure	9
	The Impact of Long-Haul Aircraft	11
	Costs and Profits of U.S. All-Cargo Operations	12
	costs	12
	Profits	12
	Air Cargo Deregulation	13
	Industry Response	14
	Impact on Rates and Service	14
	The Present State of the Industry	16
	Forecasted Industry Growth	16
	Major Concerns of Cargo Carriers	16
3.	Future Air Cargo Aircraft	21
	Freighters Derived From Passenger Aircraft	21
	Advantages and Disadvantages of Derivative Aircraft	23
	Dedicated Air Freighters	23
	Advantages and Disadvantages of a Dedicated Air Freighter	24
	A Joint Military-Civil Cargo Airplane	25
	Advantages and Disadvantages of Joint Development	27
4.	**Ground Support Systems**	31
	Air Terminal Space Limitations	31
	Mechanization and Containerization	32
	Degree of Mechanization	34
	Degree of Containerization	36
	Computerization	36
	Pickup and Delivery	37
5.	Air Cargo Operating Restrictions	41
	Federal Noise Regulation	41
	Airport Operating Restrictions	42
	Night Curfews	42
	Economic Impacts of Curfews	44
	Benefits of Curfews	45
	The Federal Role	45
	Operating Restrictions Overseas	46

Page

6. **Lighter-Than-Air Vehicles ., ... , ... 49**
Long Range Airships 49
Potential Properties of Modern Airships 50
Modernized Conventional Airships 51
Surveillance Activities 52
Heavy Lift Airships 53

List of Tables

Table No. *Page*

1. General Air Freight Rate Increases for Selected Carriers, 1975-80 15
2. Relative Cost per Unit Loading Device Under Varying Conditions 36
3. Airport Operating Restrictions, 1979 42
4. Annual Direct Effects on the New England Economy of an ll p.m. to 7a.m. Curfew at Boston, Mass. .. .. ~. 44

List of Figures

Figure No. *Page*

1. Labor and Fuel Prices for U.S. Trunks 12
2. Operating Ratio Scheduled All-Cargo Service by Carrier Group (international) 12
3. Operating Ratio Scheduled All-Cargo Service by Carrier Group (domestic) 13
4. Straddle Lift for 6-Meter or Larger Container 33
5. Side-by-Side Loading Capacity of Intermodal Containers in the B-747F 33
6. High Mechanization Elevating Transfer Vehicle 34
7. Future Air Cargo Ground System 35
8. Modular Intermodal Container Concept Modcon Array and Adaptor 37
9. Heavy Lift Airship Concept 53
10. Heavy Lift Airship—General Arrangement and Selected Performance Characteristics 75 Ton Payload 54

Chapter 1

SUMMARY

SUMMARY

GROWTH RATE

Following World War II, U.S. air cargo carriers exploited the speed advantage offered by modern aircraft to build an industry with revenues that exceeded $3 billion in 1980. Despite this growth, air cargo is still dwarfed both by the passenger side of the airline business and the surface transport side of goods movement. Air cargo totals only 11 percent of all U.S. airline revenues and 1.4 percent of all domestic freight revenues, For years, predictions have been made that dramatic growth was just around the corner. In reality, the growth has been steady but unspectacular.

DEDICATED V. DERIVATIVE AIRCRAFT

Today, almost all civil cargo aircraft are derivatives of passenger aircraft, largely because the air cargo market is too small to support production of a completely new aircraft dedicated to cargo service only. Current estimates of future market prospects (7 to 12 percent annual growth) do not indicate that this situation will change in the next 20 years. Aircraft manufacturers are at the moment unwilling to assume the risk of producing a dedicated all-cargo aircraft, particularly given the prospect of strong competition from future passenger derivatives.

Future cargo aircraft are expected to be far more economical to operate because the passenger aircraft from which they are likely to be derived necessarily will become more efficient to stay competitive in a world of sharply rising energy costs. While a dedicated cargo carrier using 1990's technology might cut fuel consumption by as much as 50 percent compared to today's most efficient carriers, very nearly the same gains in efficiency could be achieved through conversion of 1990's passenger aircraft for cargo use.

The Department of Defense is currently studying several options for meeting its future airlift needs, including the design of a joint civil/ military cargo aircraft, While such an aircraft offers the theoretical advantage of higher volume production and therefore lower unit cost, similar joint planning efforts in the past did not work out to the satisfaction of the commercial sector. Industry remains skeptical that the product of such a joint planning effort, compromised as it must be to meet military requirements, would be competitive with derivatives of future passenger aircraft.

GROUND OPERATIONS

More efficient handling of cargo on the ground could have as much impact on future growth and profitability of air cargo as would the introduction of more efficient aircraft. The private sector is working to develop more efficient systems, including standardized intermodal containers and mechanized equipment to move the containers between carriers or into storage. It has been estimated that complete containerization of cargo and a high level of mechanized handling could reduce the cost of ground operations by as much as 70 percent. Such po-

tential savings are sufficiently large that market pressures will be sufficient to move cargo carriers and freight forwarders in the direction of increased containerization and mechanization.

INDUSTRY PROBLEMS

To cope with the problem of aircraft noise, a few airports in this country and many more abroad have instituted nighttime curfews. These restrictions could seriously limit the movements of all-cargo carriers. Currently about half of all-cargo landings and takeoffs occur during the 10 p.m. to 7 a.m. time period in order to provide overnight delivery. In deciding whether curfews should be instituted, the concerns of residents living adjacent to airports need to be weighed against the community's interest in preventing a loss of jobs and the Nation's interest in maintaining the free movement of interstate commerce.

U.S. air cargo carriers also are concerned about a variety of constraints associated with landing in foreign airports which appear designed solely to protect that nation's airline from competition. Active support of relevant U.S. agencies has been and will probably continue to be needed to help carriers cope with these barriers.

LIGHTER-THAN-AIR VEHICLES

Interest in using lighter-than-air (LTA) or hybrid LTA vehicles as air cargo carriers continues. The primary role for LTAs or hybrids seems to be in the short distance movement of very large cargo or for long endurance aerial surveillance. Since modern, nonrigid LTA vehicles are expected to cruise at about one-fourth the speed of conventional jet aircraft, they are not likely to compete with conventional air and surface modes for the movement of goods over long distances.

DEREGULATION

The air cargo industry is currently undergoing a period of rapid change brought about in part by deregulation of air cargo in 1977, followed by deregulation of passenger airlines in 1978 and trucking in 1980. Air cargo carriers are now free to raise or lower rates, serve any markets they choose, and own and operate trucks that can fan out for hundreds of miles to pick up and deliver goods. The only requirement is that this goods movement be related to an air cargo operation. Several carriers are now taking advantage of these newly won freedoms to offer single carrier shipping using both air and ground modes of transportation. It is of interest that this trend toward integrated services does not necessarily depend for its success upon the introduction of new technology in the air or on the ground. Express package delivery, which is the fastest growing and most profitable segment of the air cargo industry, uses conventional aircraft and ground handling systems largely consisting of conveyor belts. The express package industry experience suggests that while new technology can result in operating efficiencies, it is not a substitute for providing services carefully tailored to the needs of shippers.

FEDERAL POLICY

The only significant Federal regulations affecting air cargo operations still in place following air cargo deregulation concern aircraft safety and noise standards. Two additional areas for continued Federal involvement relate to unfair foreign practice concerning U.S. carriers and international agreements on ratemaking. One potential problem area relates to the phasing out or elimination by the Civil Aeronautics Board (CAB) of reporting requirements. This has left both the Government and the public with no means of monitoring the flow of the air cargo portion of interstate commerce. The Air Freight Forwarders Association has requested that CAB reestablish some "minimal" reporting requirements to show where freight is moving and where traffic is developing.

Chapter 2

AN OVERVIEW OF THE AIR CARGO SYSTEM

Chapter 2

AN OVERVIEW OF THE AIR CARGO SYSTEM

INTRODUCTION

Since the beginning of air transportation, air cargo has grown largely as an auxiliary to passenger service. As late as 1978, more than one-half of scheduled air cargo moved in the bellies of passenger aircraft. In the last decade, however, domestic all-cargo carriers (those airlines that carry only goods, not people) have begun to increase their share of the market, Cargo accounts for 11 percent of the total revenues of U.S. commercial air carriers. In 1980, scheduled air cargo generated over $3 billion in revenues. [1]

[1] *'Air Cargo Statistics, U.S. Scheduled Airlines, Total industry,* 1980 (Washington, D. C.: Air Transport Association of America, 1981), p. 4.

In the period following World War II and through the 1960's, the introduction of new technology—long-haul propeller and then jet aircraft—had a great effect on the air cargo industry. In recent years, Government deregulation has come to have a major impact. Although the long-term effect of deregulation is still unclear, it already has enabled such innovations as intermodal cargo service (by Flying Tiger). While the air cargo industry as a whole showed operating profits only during the 1960's, combination (passenger/cargo) carriers flying international routes have generally made a profit and innovators such as Federal Express have been extremely profitable.

AIR CARGO INDUSTRY STRUCTURE

The world's air cargo delivery system is comprised of two networks. The first is essentially the same as the passenger network. In this system passengers are carried above and cargo is carried below in the belly of the aircraft, utilizing space not needed by baggage or mail—hence the name "belly cargo. " **These** flights are routed and scheduled for the convenience of the passengers. While the passenger airlines are generally willing to sell this otherwise unused space, they have not always wanted to bother with the ground operations of pickup and delivery and loading the belly containers, so a class of indirect carriers—called "forwarders''—has fulfilled this function. Until the Air Cargo Deregulation Act of 1977 these forwarders could not operate their own aircraft, although one large forwarder, Emery, organized a fleet of leased aircraft totally dedicated to its service.

A second network utilizes aircraft that carry just cargo. These dedicated cargo aircraft, sometimes referred to as freighters, or all-cargo aircraft, come in all sizes from small, propeller-driven aircraft to giant Boeing 747s configured to carry only cargo. The network over which all-cargo aircraft operate is less extensive than the passenger network, but has over the years carried a growing proportion of total air cargo. These aircraft generally fly at night and are scheduled for the convenience of shippers.

All-cargo *aircraft* are flown by both all-cargo carriers and some combination carriers. As the name suggests, all-cargo carriers fly all-cargo aircraft exclusively. Federal Express, the small package delivery service, and Flying Tiger are examples of all-cargo carriers. Combination carriers transport both passengers and freight.

84-328 0 - 82 - 3

Some, such as Pan American and Northwest, own all-cargo aircraft while others such as Continental, TWA, and most commuter airlines carry only belly cargo.

Approximately 20 percent of air cargo ton-miles is carried by all-cargo carriers, with the rest flown by combination carriers. The combination carriers in turn transport about half their

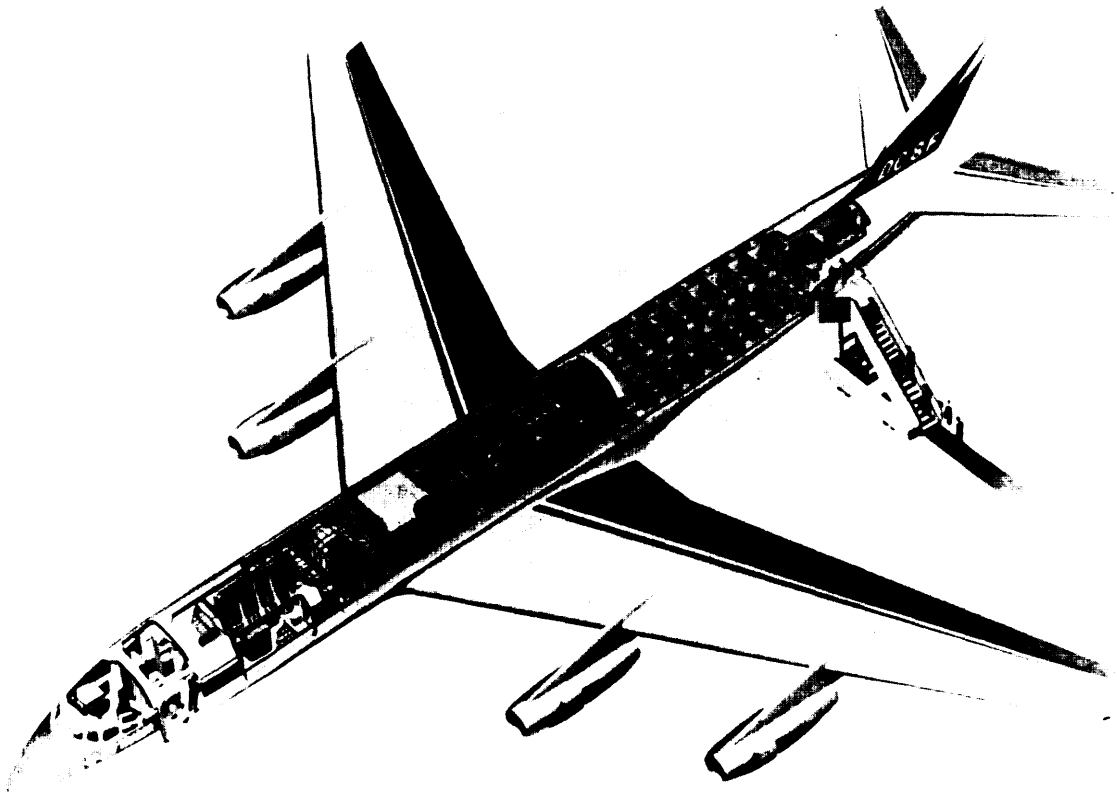

Photo credit McDonnell Douglas

Cutaway layouts of a DC-8F combination cargo and passenger aircraft

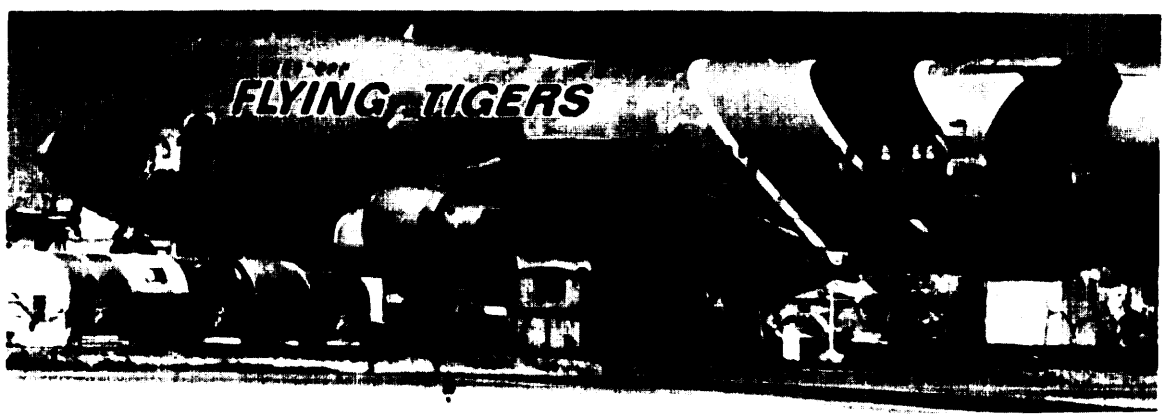

Photo credit Flying Tiger Lines

All cargo aircraft

cargo in the bellies of passenger aircraft and the other half in their own all-cargo aircraft. Load factors are much higher for all-cargo aircraft: in 1978, only 28 percent of available belly cargo space was used, while for all-cargo aircraft the figure was 64 percent.[2]

The air cargo market is not homogeneous, and the differences have resulted in specialization among various carriers. Federal Express, Emery Express (part of Emery Air Freight), Purolator Courier, and others have concentrated on the express or premium-package-delivery market, which is a special segment of the air cargo market. This specialization came about in part because the individual pieces are small, thereby enabling hub operations to be less mechanized than that required for the bulky containers common to general freight. In addition, while the cost per package is moderate, the package is small, so the net result is high revenue per pound. Higher unit revenue makes it possible to cover the higher costs inherent in the use of the small business jets and the small-shipment ground pickup and delivery system typically used to provide this service.

The express package market is the fastest growing segment of air cargo. Federal Express, with over half of the market, reported 67-percent growth from 1978 to 1979,[3] The express business has grown to the point where small jets are often too small, and express carriers are using the freedom granted with deregulation to acquire 727s, 737s, and even DC-1 OS.

Other characteristics of air express are different from general air freight. Contrary to the observation that air cargo is only competitive at long distances, some of these shipments, especially those on commuter passenger flights, can be on the order of 100 or so miles. In this situation air is competitive with ground modes because of the high frequency and convenience of service; the commuter carriers can easily and cheaply offer no-wait movement of goods. The commuters also sometimes offer special pickup and delivery service, as do the specialized express package carriers.

[2] *Air Cargo Statistics, U S Scheduled Airlines Total Industry, 1978 (Washington, D, C,:* Air Transport Association of America, 1979), chart D.

[3] Federal Express Corp., Development of Operation Engineering Section, telephone interview, Feb. 5, 1980.

THE IMPACT OF LONG-HAUL AIRCRAFT

Total world scheduled air cargo traffic, as reported by International Civil Aviation Organization, experienced a sharp build-up in 1947 to 1951 and a growth of 100 percent in the decade of the 1950's.[4]

This 1950's growth coincided with the advent of propeller aircraft capable of long-haul, nonstop domestic and international service. Another surge began in 1958 with the introduction of jet aircraft for passenger operations; their belly capacity was such as to provide an enormous increase in available lift capacity. However, air cargo traffic and revenues most clearly began to respond when jet freighters (B-707F and DC-8F) entered service in 1963.

Turbine-powered aircraft have dominated the commercial U.S. all-cargo system since 1967, pacing the development of the present system. The introduction of the stretched DC-8-63F in 1968 further spurred the growth of all-cargo traffic, particularly in international operations. The DC-8-63F carried over 40 percent of total scheduled U.S. all-cargo traffic by 1974, and then started to lose ground to the B-747F. By 1978, the 747F carried 57 percent of total U.S. all-cargo traffic and 81 percent of U.S. international all-cargo traffic. [5]

[4] *ICA0 Bulletin,* May 1969, table 9, p. 28 and diagram 1, p. 19. ICAO "cargo" does not include mail.

[5] *Operating Results From Scheduled All-Cargo Service for the* 12 Months *Ended June* 30, 1978 (Washington, D. C.: U.S. Civil Aeronautics Board, October 1978), table 4.

COSTS AND PROFITS OF U.S. ALL= CARGO OPERATIONS

costs

During the 1962-66 period, unit operating costs sharply declined. This coincided with the introduction of turbine-powered all-cargo aircraft (B707Fs and DC-8FS) in 1963 and with a major increase in all-cargo volume and growth rates. Overall U.S. all-cargo aircraft traffic growth rates reached over 55 percent in 1965, with the all-cargo traffic of combination carriers increasing 134 percent. [G]

After 1973, as shown in figure 1, fuel costs nearly quadrupled. Labor costs also increased during the 1970's, but not as rapidly as did fuel costs. Fuel and labor were roughly equal components of total operating costs in 1979; but continued price increases now make fuel the largest single cost element.

[6] *Trends in* Scheduled *A1l-Cargo Service,* 6th ed. (Washington, D. C,: U.S. Civil Aeronautics Board), table 10A, p. 31.

Figure I.— Labor and Fuel Prices for U.S. Trunks
(1967 dollars)

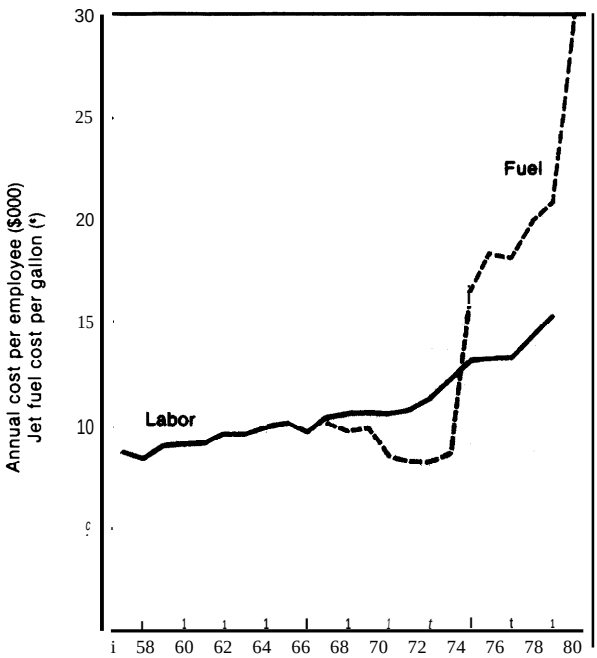

SOURCES: **U.S. Civil Aeronautics Board, Handbook of** *Airline* **Statistics (Washington, D.C., 1973) part VII, table 16;** *Handbook of Airline Statistics Supplement, 1974-7978,* **part VII, table 16, Air Transport Association,** *Air Cost index* **(Washington, D C., 1980), p 7.**

Profits

International air cargo has a greater speed differential over the ocean shipping industry than domestic air cargo has over the domestic trucking industry. This comparative advantage has helped international air cargo operations to show a better operating and profit performance.

As shown in figure 2, the international operations of both combination carriers and all-cargo carriers, produced an operating profit—an excess of revenues over expenses—for a sustained period of time. By contrast, figure 3 shows that in the domestic market combination carriers showed profits for only one brief period (1966-67). The all-cargo carriers did little better: they were profitable in 1966-67 and again in 1972-73. Although they were in a loss position when the data ended (1977), the losses were narrowing.

This lackluster performance has caused many all-cargo carriers to drop out or be absorbed by other carriers. Several combination carriers, most recently TWA, have discontinued all-cargo service. Those remaining in the business have done so for a variety of reasons. Combination carriers flying international routes have generally been able to show a profit and the prevailing

Figure 2.—Operating Ratio (operating expense as a percent of operating revenue) Scheduled All-Cargo Service by Carrier Group (international)

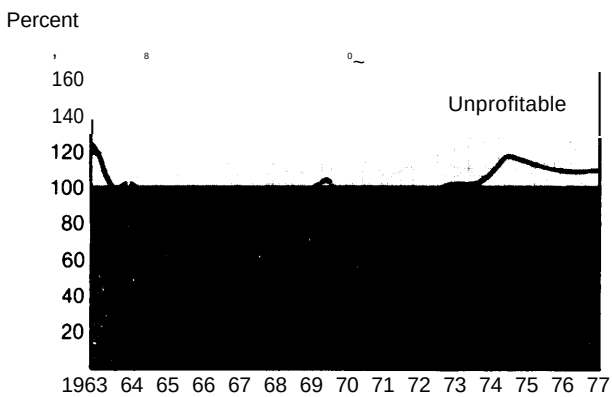

SOURCE U S Civil Aeronautics Board, *Trends in Scheduled A// Cargo Service* **6th ed (Washington, D C Government Printing Off Ice, 1977) table 3A, p 8**

Figure 3.—Operating Ratio (operating expense as a percent of operating revenue) Scheduled All-Cargo Service by Carrier (domestic)

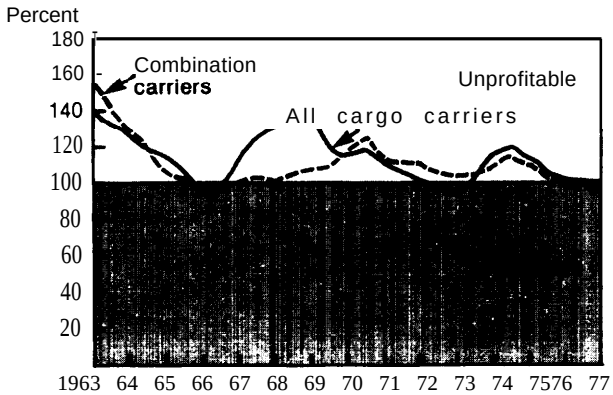

SOURCE U S Civil Aeronautics Board *Trends in Scheduled All-Cargo Service,* 6th ed. (Washington D C Government Printing Off Ice, 1977), table 3A, p 8

view is that the prospects for future growth and profitability are good. In the case of all-cargo carriers, Flying Tiger is convinced that the potential for growth is strong in the domestic market and deregulation of both air cargo and trucking opens up the prospect of forging a highly profitable intermodal cargo service.

Federal Express has demonstrated that it is not impossible to reap huge profits from air cargo. Their revenues have grown from $17 million in *1974* to $415 million in 1980. Since the company turned a profit in its third year of operation (1976) earnings have multiplied at the annual rate of **76** percent.

AIR CARGO DEREGULATION

Prior to the passage of the Air Cargo Deregulation Act of 1977 (Public Law 95-163), the Civil Aeronautics Board (CAB) was responsible for the economic regulation of commercial airlines including both the all-cargo and combination carriers. (Commuter carriers operating aircraft with payload under 7,500 lb and airlines operating solely within the borders of one State were exempt from regulation). CAB granted each carrier a "certificate of public convenience and necessity" which specified the points which could be served. CAB was also responsible for setting rates.

The domestic all-cargo industry was in poor financial health in the early to mid-l970's. A series of congressional hearings on air cargo held in *1976* highlighted the precarious state of the industry. [7] Only two certificated all-cargo carriers were operating domestic services, and both had experienced financial difficulties, During the 1970-1976 period, Western, Continental, Delta, and Eastern terminated all-cargo service. American and United reduced prime-time (overnight) air freight service and discontinued freighter operations to a number of cities. In the late 1960's, approximately 50 U.S. cities were receiving domestic all-cargo service. By **1977,** that figure had been cut almost in half. There was a movement away from scheduled service as shippers increasingly turned to contract (charter) carriage or to other modes. [8]

It has been argued that the regulatory system frustrated the growth of the air cargo industry not only by restricting the routes but also by keeping many rates below costs. Carriers claim that prior to deregulation air freight rates had been too low to support the level of prime-time freighter operations which the market demanded. The Domestic Freight Investigation completed by CAB shortly before cargo deregulation concluded that regulated freight rates were fully 42 percent below those justified by estimates of long-run costs during 1976.[9]

On November 9, 1977, President Carter signed Public Law 95-163 deregulating air cargo

[7] See U.S. Congress, House Committee on Public Works and Transpiration, *Reform of the Economic Regulation of Air Carriers,* hearings before the Subcommittee on Aviation, 94th Cong., 1st sess., serial No. 94-55, 1976.

[8] Domestic Air Cargo Deregulatio *A Preliminary Review* (Washington, 13. C.: U.S. Department of Transportation, Office of the Secretary, 1979), p. 7.

[9] *Domestic Air Freight Rates Investigation* order No. 77-8-62, (Washington, D. C.: U.S. Civil Aeronautics Board, 1976), p. 42.

rates and for 1 year limiting free entry into new markets to "grandfathers," that is carriers who had offered all-cargo service in the past (whether certificated or not). This authority was extended by subsequent act to include supplemental (charter) carriers in March 1978.

Rights under the new authority are granted under section 418 of the Federal Aviation Act. Seventy-four carriers received "section 418 certificates. " Most of these were small contract carriers. Trunk airlines receiving certificates included American, Braniff, Pan American, TWA, Northwest, and United.

Industry Response

During the first year under deregulation, Pan American was the only trunk carrier to begin new services. TWA discontinued its all-cargo operations, and there was little activity from other CAB certificated carriers. Six supplemental carriers received section 418 certificates, but only two (Evergreen and Zantop) began new service.

As expected, the all-cargo carriers, Airlift, Flying Tiger, and Seaboard, took advantage of the new route freedom. Flying Tiger has been especially aggressive in expanding the network of cities it serves. In addition, it has acquired both Seaboard and several regional trucking firms.

Federal Express, a commuter airline originally organized to carry express packages and documents in small business jets, has also expanded its route structure since deregulation. For Federal Express, deregulation meant the right to operate larger aircraft. It took advantage of this new freedom by purchasing *B-727s*, B-737s, and DC-1 OS.

In November 1978, 1 year after the passage of the deregulation bill, entry to air cargo operations was no longer confined to airlines which had offered prior service. "Any citizen of the United States" interested in operating an all-cargo airline was allowed to file an application for a section 418 certificate.

By the middle of September 1979, several additional carriers received section 418 certificates under these new open-entry rules. These included Delta, Continental, and Allegheny (now USAIR), together with such major air freight forwarders as Emery and Airborne. Currently over 100 carriers hold section *418* certificates.

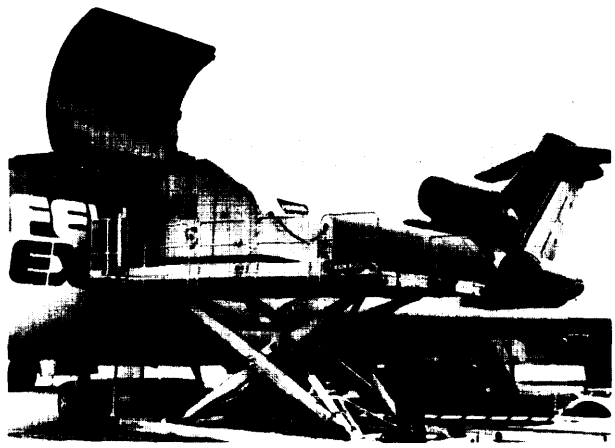

Photo credit Federal Express

There has been no rush of total newcomers to the air freight industry. Because of high startup costs, most of those entering or expanding air cargo service have been established carriers. Several air freight forwarders are furnishing their own cargo service in markets where belly capacity is inadequate. Often they lease aircraft and pilots—an arrangement called a wet lease. The major air freight markets remain dominated by the same carriers as before deregulation, The new entrants are primarily operating in local commuter-type markets.

Impact on Rates and Service

Although some early proponents of cargo deregulation had predicted that rates would drop, there has been an increase in air freight rate levels and premium rates charged for commodities requiring special handling. The Shippers National Freight Claim Council, Inc., has testified that the real increases in rates published between January 1978 and January 1979 range up to 89 percent on minimum charges, 21 percent on 100-lb rates, and 76 percent on 5,000-lb rates.[10] CAB reports, however, that air cargo rates

[10]Shippers National Freight Claim Council, testimony of William J. Angello, Executive Director / General Counsel before the Subcommittee on Aviation, House Committee on Public Works and Transportation, July 25, 1979.

began to increase in the 2 years preceding deregulation and that some carriers have boosted their rates more than others (see table 1).

The rates for some commodities and some markets have increased more than others. Rates for live animals have increased from 110 to *200* percent of general commodity rates. Many carriers have increased priority rates from **130** to **150** percent of the general commodity rates. Rates in short-haul markets have increased more than in long-haul markets. Short-haul markets have long been unprofitable, while the denser long-haul markets are more compatible with freighter aircraft economics.

Published rates, however, do not tell the whole story. Air freight rate levels and premium rates have increased, but carriers have been offering discounted rates—usually for large shipments and particularly on selected daylight flights which are less popular with shippers than "prime-time" (overnight) flights. There have also been some rate cuts in the small package sector as some of the larger carriers attempt to compete with Federal Express in the rapidly growing small package business.

Although CAB has yet to issue a new set of rules governing ratemaking on international routes, it has notified domestic carriers that it does not favor their participation in the International Air Transport Association ratemaking proceedings. Substantial excess cargo capacity over the North Atlantic has led to a rate war, and CAB apparently is not going to intervene.

Some shippers have claimed that air cargo service has been reduced since passage of the Air Cargo Deregulation Act. It is likely, however, that the Airline Deregulation Act of 1978 (Public Law 95-504) at least initially had more effect on cutbacks in belly capacity than did the cargo deregulation act. Immediately following airline deregulation, there was an increase in passengers—and therefore passenger baggage—with a resulting decrease in belly space available for cargo. In 1980, passenger load factors fell, thus freeing up additional belly space. Some of the larger air freight forwarders have begun to work more with charter and commuter carriers which will serve those areas abandoned by trunk airlines. CAB officials of the previous administration admitted that some small communities lost air freight capacity when airlines discontinued combination service. They did not see this as a problem, however, saying that the type of aircraft used in such service typically did not carry much freight and also pointing out that it is rapidly being replaced by truck service owned or leased by air cargo carriers to funnel shipments to nearest air freight traffic hubs.

Table 1 .—General Air Freight Rate Increases for Selected Carriers 1975-80

	Carriers operating freighters			Carriers with no freighter operations		
Effective dates	AA	FT	UA	CO	DL	TWA
Jan. 1975	10%	80/0	70/o	—	—	80/0
July/Aug. 1975	10	9	7	7%	60/0	9
Feb. 1976	10	10	8	—	—	9
April 1976	—	—	—	—	6	–
Oct. 1976	10	10	8	—	—	8
Dec. 1976	—	—	—	8	6	1
July 1977	9	9	9	—	—	8
Sept. /Oct. 1977	–	–	–	8	8	–
Nov. 9, 1977	Al	R	CARGO	D	E	R EG U LAT 10 N
Mar./April 1978	10	8	9	–	10	9
Nov. 1978	—	—	—	11	—	—
Jan./Feb. 1979	9	8	9	–	5	–
May 1979	–	5	—	–	—	–
June 1979.	5	7	—	–	—	—
Aug,lSept. 1979	7	–	12	–	—	8
oct. 1979	–	4	–	10	15	–
Nov./Dee. 1979.	5	5	5	—	—	5
Jan./Feb. l98O	—	5	5	10	–	–
Mar./April l98O	10	5	2	–	10	12
June/July 1980.	10	10	10	10	—	10
Sept. /Oct. 1980	10	7	7	–	–	–

Carrier codes. AA American; CO Continental; FT Flying Tiger; DL Delta; UA United; TW TWA

[a]TwA terminated freighter operations m 1978

NOTE. These percentages represent in some cases simple "across. the-board" Increases by the amount Indicated, and in others a weighted average of Increases of varying amounts for different categories of rates (i e , changes in the rate structure Itself)

SOURCE. Civil Aeronautics Board

THE PRESENT STATE OF THE INDUSTRY

It is not possible to put together a complete picture of the present state of the cargo industry. Following deregulation, CAB reduced, and in some cases, eliminated reporting requirements, leaving both the Government and the public with no way to monitor the performance of the industry, The Air Freight Forwarders Association has requested that CAB reestablish some "minimal" reporting requirements for forwarders and airlines that would at least provide data on where freight is moving and where traffic is developing. There is concern as well that this lack of data may permit organizations and individuals to use fragmentary information to support their particular positions.

CAB testified before the House Subcommittee on Aviation in July 1979 that the all-cargo carriers increased their total revenue ton-miles of shipments by approximately 26 percent during 1978 compared to an Ii-percent growth during 1977. Flying Tiger increased its domestic revenue ton-miles over 33 percent, but a large part of this increase was due to a reclassification of some Alaska traffic (enroute between the United States and Japan) as domestic.

Commuter airlines increased their total cargo tonnage by 48 percent during 1978, compared to 12 percent in 1977. ' [11] In this category, Federal Express has expanded its total shipments by *67* percent in 1979 as compared to 38 percent in 1978, and 15 percent in **1977.2**

Total freight revenue ton-miles of the trunk combination carriers increased only 1.1 percent in 1978 compared to 7.0 percent in 1977. All-cargo traffic of the trunk carriers increased 2.0 percent in 1978.13 Data from the Air Transport Association show that freight revenues for the scheduled carriers increased 14.5 percent in 1980, but traffic (ton-miles) decreased 1.7 percent, [14] reflecting both the rate increases and the impact of the recession.

[11] U.S. Civil Aeronautics Board, testimony before the Subcommittee on Aviation, House Committee on Public Works and Transportation, July 25, 1979, p. 37.

[12] Fecleral Express Corp., Development of Operation Engineering Section, telephone interview., Feb. 5, 1980.

[13] *Aviation Daily Dec.* 5, 1979.

[14] *4A It Cargo Statistics 1980* (Washington, D.C Air Transport Association, June 1981).

FORECASTED INDUSTRY GROWTH

Available forecasts of long-term air cargo growth vary from about 8 to 11 percent for both U.S. domestic and U.S. international traffic. Total free world growth was estimated by one forecaster at 12 percent, and by another to be between 7 and 9 percent. All estimates were made before the sharp increase in fuel prices that occurred in late 1979. While air cargo market forecasts in the past have tended to be overoptimistic, it should be noted that in 1972 few expected the phenomenal rate of growth that subsequently occurred in the express package delivery business.

MAJOR CONCERNS OF CARGO CARRIERS

The major concerns of the air cargo industry today are similar to the concerns of the air passenger industry. Fuel costs, though having recently stabilized, still play a major role in determining which markets to enter or exit.

Another concern is that airport space is becoming increasingly tight, especially for cargo carries. As will be discussed in chapter 4, the construction of major new airports appears unlikely in the near future, but some alternatives

are available for making better use of existing facilities.

Also, carriers will have to bring their fleets into compliance with Federal Aviation Administration noise standards under new noise legislation. Communities are continuing to exert pressures against aircraft noise, resulting in increased attempts to reduce noise impacts by imposing operating restrictions on carriers. Night curfews are still not common in the United States, but if adopted they could severely impact cargo operations.

Another industry concern relates to actions of some foreign government policies to protect their national airline from U.S. competition. Some industry spokesmen state that a concerted U.S. Government effort is needed to ensure that U.S. carriers are treated fairly overseas.

84-328 O - 82 - 4

Chapter 3

FUTURE AIR CARGO AIRCRAFT

Chapter 3

FUTURE AIR CARGO AIRCRAFT

Almost all commercial all-cargo aircraft currently in the fleet are derivatives or conversions of passenger aircraft. Some civilian and military planners, as well as some all-cargo operators, have argued that the growth of the industry has been hampered by the lack of aircraft optimized to fulfill cargo carrying requirements.

Three alternative approaches to the development of future all-cargo aircraft have been identified:

1. as a derivative of a new or existing passenger or military airplane;
2. development of a dedicated civilian cargo aircraft designed without regard for either passenger or military requirements; and
3. development of a joint civil-military air cargo plane that would satisfy both commercial and military requirements.

Each of these alternatives will be discussed in turn.

FREIGHTERS DERIVED FROM PASSENGER AIRCRAFT

In 1963, freighter service was available only with propeller aircraft: about 75 percent piston aircraft (primarily the DC-7) and 25 percent turboprops (such as the CL-44). By 1970, almost 98 percent of scheduled freighter service was offered with jet aircraft: 55 percent with the B-707-300 B/C, 22 percent with the DC-8-63F, 11 percent with the DC-8-50F, and 10 percent with the B-727-1OO C/QC.

The fleet average operating cost declined from $0.30 per revenue ton-mile in 1963 to $0.16 in 1967 and then began to increase, reaching $0.27 in 1977 (current dollars). Total operating costs have been steadily rising since 1973 because of general inflation as well as the abrupt increase in the price of fuel. Although the introduction of the B-747 in domestic service did produce lower cost freighter service, the small number of B-747s relative to the B-707s and DC-8s has not yet changed the fleet average cost curve. B-747s have found much greater use in international cargo operations than they have in domestic operations.

Both the B-707 and the DC-8 were designed as passenger aircraft, with the fuselage cross-section being determined by the requirements of six-abreast seating and the width of the aisle. Both aircraft could carry 13 pallets of 88 by 125 inches, the standard units at that time.

The B-747 freighter comes closest to being a dedicated or uncompromised freighter design for commercial operations. When Boeing lost the competition for the military cargo C-5A contract to Lockheed in *1965,* Boeing took its assembled C-5A design team, added personnel from their commercial program, and set out to design an aircraft to meet the perceived needs of the rapidly growing commercial market. The resulting B-747 was designed as a passenger plane. However, because it appeared at that time that a supersonic transport (SST) would be a strong competitor, the 747 was also designed to be an efficient freighter in the event that the SST took over the passenger market.

The 747 was designed to hold two *8* by 8 ft containers abreast. This was the origin of the wide body, which at the time had little to do with passenger appeal. [1]The requirement that cargo be loaded through the nose of the aircraft forced the cockpit to be placed at the upper

[1]John E. Steiner, *Jet Aviation Development: One Company's Perspective,* prepared by Boeing Commercial Aircraft Co. (Washington, D. C.: National Air and Space Museum, Smithsonian Institution, October 1979), pp. 15-18.

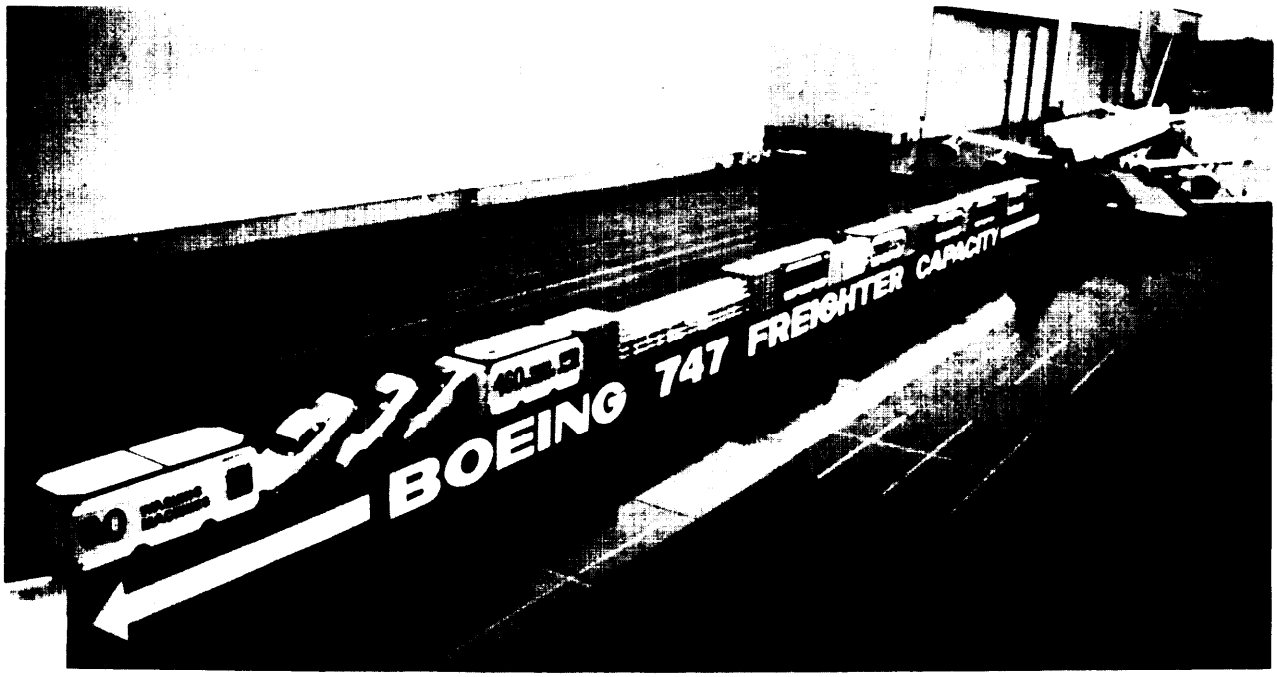

Photo credit: Boeing Aircraft Co.

Cargo capacity of Boeing's 747

deck. Aerodynamic considerations required the designers to allow a door height of only 8 feet, 2 inches—resulting in only a 2-inch clearance for containers.

Because the SST did not materialize as a competitor, the first 747 freighter was not delivered until 1972, more than 2 years later than the first passenger version. Since then, however, progress has been rapid, with a total of 129,747 freighters delivered by December 1980.[2]

Manufacturers are currently considering a number of variations on their existing aircraft. In the large-payload category, Boeing is considering stretching its B-747-200F up to 50 ft, resulting in *30* percent additional containerized volume. In the medium-payload category-derivative aircraft would include the L-1011-500F, the DC-1 OF, and the B767F. Douglas' DC-1OF could be stretched and offered in a "combi" version. Boeing's B-707-320C could conceivably be stretched. Finally, Boeing is planning a freighter version of the *B-767* aircraft.[3]

For the light-payload category of freighters—under 60,000 lb—Lockheed is considering marketing a potential derivative of its Hercules L-1OO, Dash sO. Current proposals include a stretch of up to 45 ft over the basic model, which would provide capabilit, for transporting up to eight 8 by 8 by 10 ft containers with payload ranging from 54,000 to 72,000 lb. This aircraft could replace the B-707-320C and the DC-8F on a number of routes and also have the capability (because of being able to handle the 8 by 8 ft containers) to be an intermodal feeder freighter for carriers using the B-747F. Other advantages include lower fuel cost and straight-in, straight-out loading. The Dash *so* would be appropriate for short- to medium-range hauls—l,400 statute miles with a payload of *66,000* lb and 1,960 miles with a payload of 50,000 lb. Derivatives of the present B-727 and B-737 may also be possible.'

[2]Boeing Aircraft Co., telephone interview, July 14, 1981.

[3]Steiner, **op.** cit., 167-168.
'Ibid.

ADVANTAGES AND DISADVANTAGES OF DERIVATIVE AIRCRAFT

Existing air cargo derivatives of passenger airplanes have proven very satisfactory. For example, the B-747-200F has proven to be the large payload workhorse of the air cargo fleet and could continue unmodified for a number of years.

Any derivative freighter has the advantage of having most of its development costs already charged against the sale of its passenger counterpart. In addition, the financial arrangements for purchasing the airplane have already been established and there is a relatively short lead time before production (as compared to all new aircraft).

A major disadvantage of existing air cargo aircraft is that they represent 1960's technology and that, therefore, their direct operating costs are higher than what might be achieved with present technology. Additionally, since they generally have not been designed specifically for air cargo, loading and unloading can present problems; the aircraft may be pressurized more than necessary, and there may be equipment built in for passenger safety that is unneeded for cargo.

DEDICATED AIR FREIGHTERS

A dedicated commercial air freighter is an airplane which has been designed from the ground up as a freighter, with no constraints imposed by either passenger or military requirements. Over the years, there has been a debate concerning the cost effectiveness of such an airplane, with some all-cargo carriers claiming that they could consistently earn a profit if they had such an aircraft. To help resolve this controversy, the National Aeronautics and Space Administration (NASA) selected two contractors, Douglas Aircraft Co. and Lockheed-Georgia Co., to independently evaluate the feasibility of producing such a freighter by **1990.** This was done as part of the Cargo/Logistics Airlift Systems Study (CLASS). [7]

Douglas made several forecasts of the future fleet composition given various developments. Their analysis indicated that two new cargo aircraft could be *derived* from existing wide body aircraft using 1980 technology. These aircraft could be commercially viable and could become operational in 1985. Results suggested a preference for a short- and a long-range version, each with a payload of about 330,000 lb. [G] At comparable payloads, these cargo aircraft were estimated to provide a 20 percent reduction in trip cost and a 15 percent decrease in aircraft price compared to current wide bodies in inflated *1984* dollars, [7] Douglas estimated there could be **400** such derivatives produced by 1998. [8]

A long- and a short-range *dedicated* freighter were then hypothesized to be introduced in 1994 using 1990 technology (an unrealistically short development time according to some experts). The *1990* technology assumed was derived from NASA's Aircraft Energy Efficiency (ACEE) program, which seeks to develop a variety of technologies leading to fuel savings and lower operating costs for future passenger aircraft. Some of the new technologies include: 1) composite materials, which reduce weights and provide higher strengths; 2) active controls, which provide automatic response to flight and gust conditions; and 3) advanced engine technology, with higher thrust to weight ratios and better specific fuel consumption.

[7] See: McDonnell Douglas Corp., Douglas Aircraft Co., *Cargo Logistics Airlift Systems Stud, (CLASS),* 4 vols,, prepared by R. J. Burby and W. H. Kuhlman, under NASA contract No. NASl-14948 (Hampton, Va.: Langley Research Center, National Aeronautics and Space Administration, October 1978). (Hereafter cited as "Douglas, *CLASS.") See* also: Lockheed-Georgia Co., *Cargo 'Logistics Airlift Systems Study (CLASS) 2 vols.,* prepared by J. M. Norman, R. D. Henderson, F. C. Macey, and R. P. Tuttle, under NASA contract No. NASA-14967 (Hampton, Va.: Langley Research Center, National Aeronautics and Space Administration, November 1978). (Hereafter cited as "Lockheed, *CLASS.")*

[8] Douglas, *CLASS Volume -? Future Requirements of Dedicated Freighter Aircraft to Year 2008* pp. xxiv-xxv.

[7] Ibid., p. xxv.

[8] Ibid., p. xxvii.

In order to achieve a manufacturer's return on investment (ROI) of 15 percent while maximizing the airlines' ROI, it was determined that the long-range dedicated aircraft should have a payload of 150,000 lb, and the short-range, a payload of 100,000 lb. The airline ROI was relatively insensitive to payload in the cases assumed, however, because the payload could be increased to *330,000* lb for the long-range and 220,000 lb for the short-range with only a l-percent decrease of airline ROI.[9] Such dedicated freighters could reduce aircraft operating costs per trip (direct operating cost—DOC—less depreciation and insurance) by an estimated 43 percent below current wide bodies.[10] In combination with other improvements, such as containerization and mechanized terminals, shippers could gradually achieve overall savings of roughly *20* percent over the 1978-2000 period. '

[9]Ibid., pp. xxxiv-xxxv.

[10]"Ibid., p. xxix.

[11]Allen H. Whitehead, Jr., and William H. Kuhlman, "Demand for Large Freighter Aircraft as Projected in the NASA *Cargo/Logistics Airlift Systems Studies,"* NASA Technical Memorandum 80074 (Hampton, Va.: Langley Research Center, National Aeronautics and Space Administration, April 1979), p. 6.

Lockheed calculated the payload which maximized air carrier profits assuming no constraint on manufacturer's ROI. For *1990* this was estimated to be *330,000* lb, as compared to **225,000** lb for the current **747-200F** freighter. It was estimated there would be a demand for 270 such airplanes in 1990 and over 480 in 2000. Air cargo rate reductions of up to 45 percent were estimated to be possible. These estimates, however, not only assume concomitant improvements in terminal operations, but also postulate an increase in air cargo demand of over *250* percent in response to the 45 percent rate decrease. In addition, the phase-out of all other aircraft is assumed.[12]

Thus, while there appears to be some uncertainty about the optimum payload for a dedicated air freighter, Douglas and Lockheed agree that substantial cost savings and rate reductions could result. These findings, however, are extremely sensitive to assumptions about fuel and labor costs and, most particularly, to growth in demand for air cargo services. Further, it ignores the competitive situation brought about by the lower capital costs of future derivative air cargo aircraft.

[12]Lockheed, *CLASS Executive Summary,* pp. 27-32.

ADVANTAGES AND DISADVANTAGES OF A DEDICATED AIR FREIGHTER

In summary, the advantage of the dedicated air freighter is that it can be designed very specifically for air freight demand, providing the type of loading and unloading, flooring, fuselage configuration, pressurization, etc., which is optimal for its contents. Furthermore, given that it is unlikely to be built before the 1990's, it can make full use of NASA's ACEE results, with the potential of significantly lowering operating costs and fuel usage.

A major disadvantage of the dedicated air freighter would be that the estimated $2 billion to *$2.5* billion development cost (1976 dollars) would have to be absorbed solely by the sales of that airplane.[13] Such a high overhead raises the price of the airplane and its DOC (because of depreciation and insurance costs) and increases the financial risks to investors, especially since it would be competing with derivatives which have much smaller development costs per unit and which themselves have incorporated some of the cost-reducing technology.

A 1979 NASA analysis suggests that the significantly lower purchase price for the deriva-

[13]U.S. National Defense Transportation Association, Military Airlift Committee, *An Executive Report on the Potential for a Joint Commercial Military Air Cargo System Development* (Washington, D. C.: Apr. 29, 1977), p. 47. (Hereafter cited as "NDTA, *Executive Report.")*

tives would overshadow the economic benefits of the dedicated aircraft. [14] Apparently having come to the same conclusion, manufacturers are reluctant to undertake development of a dedicated air freighter unless there is some way to reduce the risk.

Some planners have spoken of a passenger derivative of the dedicated air freighter as one means of reducing risk. Since all-cargo airplanes form a very small percent of the carrier fleet, this would be an extreme example of the tail wagging the dog. It is much more likely that an all-cargo airplane would be derived from a passenger airplane which incorporates all ACEE technological improvements. However, assuming favorable growth in air cargo, there is increasing incentive for aircraft designers to take cargo needs into account when designing new passenger aircraft.

[14] William D. Conner, and John C. Vaughn, III, "Multi-role Cargo Aircraft Options and Configurations," NASA Technical Memorandum 80177 (Hampton, Va.: Langley Research Center, National Aeronautics and Space Administration, October 1979), p. 3.

A JOINT MILITARY-CIVIL CARGO AIRPLANE

The Department of Defense (DOD) perceives a shortfall in military airlift capability which will gradually worsen as the Army moves toward the use of larger and heavier vehicles. DOD wants the capability to react more quickly to overseas emergencies and to move equipment from one battle zone to another as needed.

There are several alternatives for making up the described shortfall in airlift capacity. One option would be to purchase an aircraft designed exclusively to meet military needs. The cost of procuring **200** such vehicles with a payload of *350,000* lb was estimated in 1977 to be in the range of $12 billion in 1976 dollars (about $60 million per aircraft). [15]

An alternative, longer range option is a joint military-civil airlift vehicle, which would be produced in two versions—a military version and a civilian version. Originally designed as the C-XX, it has recently been renamed the Advanced Technology Civil Military Aircraft (ACMA). The civilian version would include a reinforced floor and other special features so that it could serve as part of the Civil Reserve Air Fleet (CRAF). This could also reduce the number of required military ACMAS. The Military Airlift Command has also considered the feasibility of a commercial passenger version in order to increase the number built, and thereby reduce unit costs.

The 1977 Executive Report of the Military Airlift Committee of the National Defense Transportation Association estimated it would still cost over $11 billion to produce 200 ACMAs, despite some cost savings achieved through design compromises to meet civilian needs. However, they estimated that *80* percent of the **200** airplanes could be purchased by the commercial air carriers at a cost of **$50** million each, or a price subsidy of $7 million apiece *(1976* dollars) to cover decreased payload and increased operating cost. The cost to the military was estimated to total approximately $3 billion, a savings of some $9 billion over the cost of procuring 200 aircraft that might lie idle much of the time waiting for a crisis to develop. [16]

The Air Force has funded Boeing, Lockheed, and Douglas to look more closely at airplane designs and to anticipate the penalties to be incurred by a joint design. Douglas developed a design for a 200,00()-lb" payload aircraft with a conversion kit to convert a CRAF airplane for military use. The lower recommended payload was based on the contractor's estimate of the best commercial market. The conversion kit includes a heavy military floor for installation on

[15] NDTA, *Executive Report,* pp. 14, 20.

[16] Ibid., pp. 61-62.

top of the original floor as well as extra floor bracing, a front drive-in ramp, and landing gear conversion components that provide kneeling capability. [17] The conversion was estimated to take about *24* hours to complete. 18

The civilian version of the ACMA aircraft would weigh approximately *6,500* lb more than a fully dedicated commercial freighter. The ACMAs purchased by the military would weigh approximately 6,8oo lb less than those civil reserve aircraft brought up to military standards through the kit modification approach.[19] Thus, this ACMA concept involves a weight penalty for both its civil and military applications. However, advanced technology could greatly reduce airplane size and weight compared to current technology. It has been estimated that operating weight and takeoff gross weight of a dedicated ACMA freighter would be only 65 percent and 76 percent of the corresponding weights for a current technology freighter having the same payload, range, cruise speed, and field length.[20]

Lockheed's ACMA design was considerably larger, having a payload in the range of 400,000 lb.[21] The contractor estimated a 34-percent reduction in DOC over the B-747, at a range of 3,5oo nautical miles, and a 5&percent decrease in fuel consumption .22

One question to be answered if an ACMA were to be developed is what organization would be responsible for its production. This is a major problem, because accommodating a wide variety of potential commercial customers, each with their own views, is inconsistent with traditional military purchase procedures. Previous attempts at interagency cooperative development of a joint military/civil cargo aircraft have not been successful. The Air Force's C-141 is a primary example of such a developmental effort; there appeared in the beginning to be enough commonality of military/civil aircraft requirements to justify a cooperative effort. The Federal Aviation Administration consulted with prospective commercial users of the aircraft and worked closely with the Air Force in certificating the plane for civil air operations. Nevertheless, only the military purchased the aircraft. 23 While there is general agreement that a joint effort makes sense, there is great skepticism on the commercial side that it would work to their advantage in practice.

A recent development could have a significant impact on the ACMA program. The Air Force has been directed to cancel its existing program to develop a tactical airlifter and to plan a new strategic airlifter, the CX, having some tactical capability. The emphasis is on developing an aircraft which will be in operation earlier than the ACMA. A CX task force is currently working to determine the specifications of the airplane. It seems likely that a CX would be a derivative of an existing aircraft. The effects of the CX program on the proposed ACMA program are uncertain at present, and would not be clarified until the CX is better defined. If the CX program is implemented, the most likely effect would be to delay consideration of the ACMA.[24]

"E. A. Barber, R. J. Marhefka, and D. G. Blattner, "Prospects for Commercial Commonality in Military Transport, " presented at AIAA Aircraft Systems and Technology Meeting, Aug. 21-23, 1978, p. 10.

[18] Ibid., p. 10.

"Ibid., p. 11.

'" Ibid., pp. 11-21.

[21] W. T. Mikolowky, et al., Lockheed Aircraft Co., "Identifying Desirable Designs Features for the C-XX Aircraft: A Systems Approach," presented at the AIAA Aircraft Systems and Technology Meeting, Aug. 20-22, 1979, p. 4.

"Ibid., p. 9.

[23] D H Reeher, *Survey of institutional Mechanisms Within the Federal* Government for *Cooperative Development of Military/Civilian* Transport *Aircraft* (Arlington, Va.: Analytic Services, Inc., April 1972), p. 4.

*'Ibid.

ADVANTAGES AND DISADVANTAGES OF JOINT DEVELOPMENT

One advantage of a joint development is that the development costs would be shared by the civil and military sectors, and the number of airplanes required by the military could be decreased by the number of CRAF airplanes purchased by air carriers and available to the military in case of emergency.

There are a number of potential disadvantages, including the constraints imposed by joint development, the penalties that would be incurred by both civil and military airplanes, and the difficulty in finding an organizational structure that permits their reconciliation. Certain features suitable to a military aircraft would have to be discarded, for example, because they are incompatible with a civil freighter. Also, each airplane would have to carry some weight which it would not carry if it were independently designed. This penalty weight reduces the payload and the profitability of the commercial version. MAC proposes to compensate for this through either a transfer payment at purchase, or an operating penalty compensation payment, or both.

Perhaps most important, it is not clear that there will be a sufficient market for the civil version or that it will be cost competitive with derivatives of future passenger aircraft. Finally, the advent of the CX program renders the timing of the ACMA program uncertain. The future of the ACMA program cannot be addressed until the details of the CX program have been agreed on.

Chapter 4

GROUND SUPPORT SYSTEMS

Chapter 4

GROUND SUPPORT SYSTEMS

There is a widely held point of view in the industry that air cargo's competition for increased volume and market share could be decided more by how well it performs on the ground than in the air. The ground side support systems so important to the future of air cargo include: 1) airport terminal operations, and 2) pickup and delivery services. Cargo must be picked up at the origin of the trip (usually by truck) and delivered to the airport. At the terminal cargo must be transferred from truck to aircraft, aircraft to aircraft, or from aircraft to truck. Cargo is offloaded, weighed if necessary, and sorted by destination. The necessary airbills and other pertinent forms move with the shipment.

Average terminal costs for processing bulk cargo, as a percentage of total line haul plus terminal costs, have been computed to vary from a high of *83* percent for flight lengths of *400* miles to 33 percent for a stage length of *4,000* miles. [1] The high percentage cost of ground operations for shorter trips is particularly significant, since it is in these domestic trips where air cargo confronts some of its strongest competition from surface modes.

[1]McDonnell Douglas Corp., Douglas Aircraft Co., *Cargo Logistics Airlift Systems Study (CLASS), Volume I: Analysis of the Current Air Cargo System,* prepared by R. D. Burby and W. H. Kuhlman, under NASA contract No. NAS1-14948 (Hampton, Va.: Langley Research Center, National Aeronautics and Space Administration, October 1978), p. 210. (Hereafter cited as "Douglas, *CLASS.*")

AIR TERMINAL SPACE LIMITATIONS

Several of the major air cargo terminals are approaching the limits of their capacity with current operations and equipment, thus creating a major problem for air cargo carriers. [2] It would be difficult to expand many of these terminals, given the lack of available land. Two options suggested to accommodate future increases in air freight traffic are: 1) off site bulk freight processing, and 2) all-cargo airports. [3]

Offsite bulk freight processing terminals move the freight consolidation operations away from the crowded airport areas, to less crowded, less expensive quarters. Consolidated freight could be moved back to the airport in containers or special bins. The airport area could be used for aircraft loading and a limited amount of container storage and staging functions. Terminal productivity would increase because of the greater use of containers, and congestion would decrease because trucks and parcels would go to the off site terminals.

While some forwarders and all-cargo carriers favor this option, combination carriers generally consider their passenger and freight operations to be too closely integrated to have separate terminals. These combination carriers believe they would need to duplicate some of their functions, equipment, and personnel.

The off site bulk freight processing terminal is of interest if there is a significant percentage of cargo not containerized by the shipper. The facility could be used by the forwarder or the airline to containerize cargo prior to the airport terminal operation.

The *all-cargo airport* would, as the name implies, be entirely devoted to the handling of cargo. Given the difficulty of developing any major new airports, this must be regarded as only a remote possibility. The Airport and Airways Development and Revenue Act of 1970

[2]Nawal K. Taneja, The *U. S. Air-freight Industry* (Lexington, Mass.: Lexington Books, 1979), p. 206.

[3]Ibid., p. 212.

made funds available for construction of new airports, but of the 85 new airports built during the first 5 years, all but three were for the use of general aviation exclusively.[4] Citizen opposition to major new airports continues to be a very potent and effective force.

It might be possible to use abandoned or underutilized military airports as all-cargo airports. The National Aeronautics and Space Administration (NASA) and the Air Force experimented with this idea at one Air Force base that was still in use but underutilized. The experiment was not successful because the demands of the Air Force mission compromised the kinds of services to the commercial tenants which the management of a commercial airport could provide.[5]

[4]Jeff Cochran, Associate Administrator for Engineering and Development, Federal Aviation Administration, presentation before the National Academy of Sciences.

[5]Operations Research, Inc., *Joint Tenancy for Cargo Airports*, prepared by M. N. McDermott, under NASA contract No. NASW-2961 (Washington, D. C.: ORI, July 1977).

MECHANIZATION AND CONTAINERIZATION

One promising long-range option for alleviating the space problem at air terminals is mechanization. A major concern of terminal managers is to define the appropriate type of mechanization and the optimum rate at which it should be introduced into the cargo handling system. The desirable degree of mechanization depends on the volume of cargo, the degree of unitization (e. g., palletization or containerization) and the uniformity of shipments with respect to volume, shape, and weight. Today only a handful of heavily utilized terminals have either the volume or the size and type of shipments to warrant extensive mechanization.

Sorting of shipments is still done manually at most terminals, partly because of the large variation in package size. To reduce labor cost and save space, a number of carriers have automated these cargo handling functions at the major hubs. The success of this automation has been mixed. In the late 1960's, TWA automated its cargo facilities in St. Louis airport so extensively that a failure in one component usually tied up the whole system, and there was also no room to make repairs. On the other hand, a number of European carriers have extensively automated their air freight operations with apparent success, although actual sorting decisions are still made by a human operator.

Varying degrees of mechanization are appropriate dependent on shipments. At the lower end of the spectrum, there are specially adapted forklifts for handling containers. There are also straddle lifts, illustrated in figure 4. Figure **5** shows two such containers stowed in a 747. Other mobile systems are commonly used for loading freight on aircraft. Such mobile equipment is less costly, and more cost effective for lower cargo volumes than is a fixed system.

As the volume and degree of unitization increases, the cost effectiveness of fixed mechanized systems, both for sorting and for loading, increases. Assuming an annual air cargo growth rate of 8 percent, an increasing number of systems are likely to become heavily mechanized in the future.[6] A NASA CLASS study forecasts that growth will initially be handled by increasing the efficiency of existing systems along with increased use of containers loaded by the shipper or forwarder. For example, with a modest investment, the equipment now widely used in terminals to handle large containers can be readily adapted to handle 3-meter containers and smaller. This could allow for over a fourfold increase in terminal throughput, with a resulting potential reduction in capital investment per container of 72 percent. To handle the popular 6-meter containers, a relatively advanced terminal capable of a ninefold increase over current processing levels could be achieved with currently available technology.[G]

One particularly useful technology for high volume situations is the elevating transfer vehicle (ETV) and stacker system which allows

[6]Douglas, *CLASS, Volume III: Cross Impact Between the 1990 Market and the Air Physical Distribution System Book 1*, p. 180.

Figure 4.—Straddle Lift for 6. Meter or Large Col~41aliler

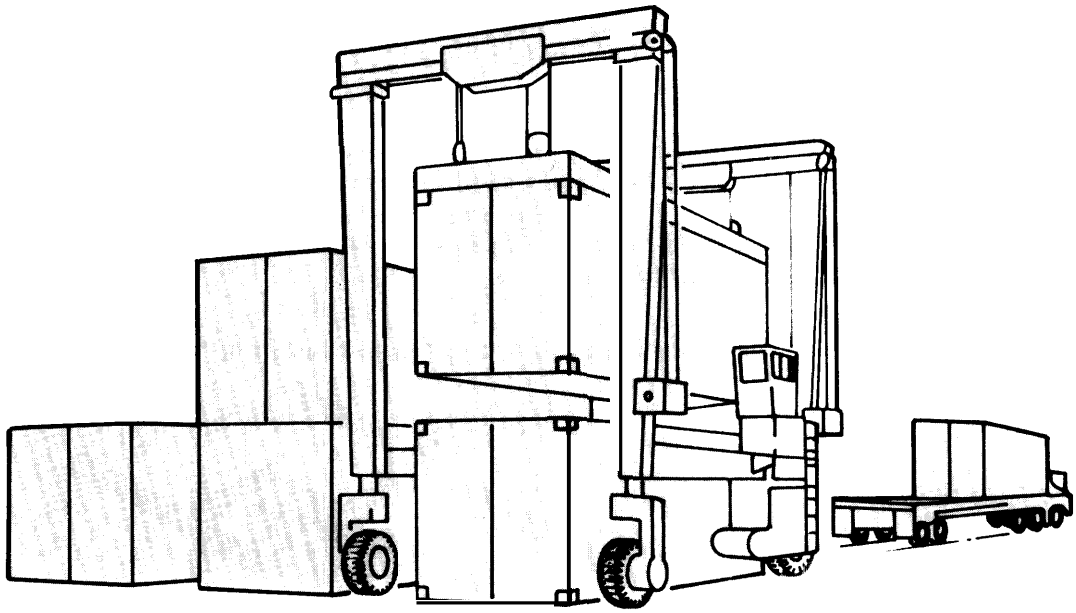

SOURCE McDonnell Douglas Corporation, Douglas Aircraft Company, Cargo logistics Airlift *Systems 5 tems Std, (. .* *volume II* prepared by R D Bu rby and W H Kuhlman, under NASA contract 1-14948 (Hampton Va. Langley Research Center, National Space Administration October 1978) p187

Figure 5.–Side-By-Side Loading Capability of Intermodel Containers in the B-747F

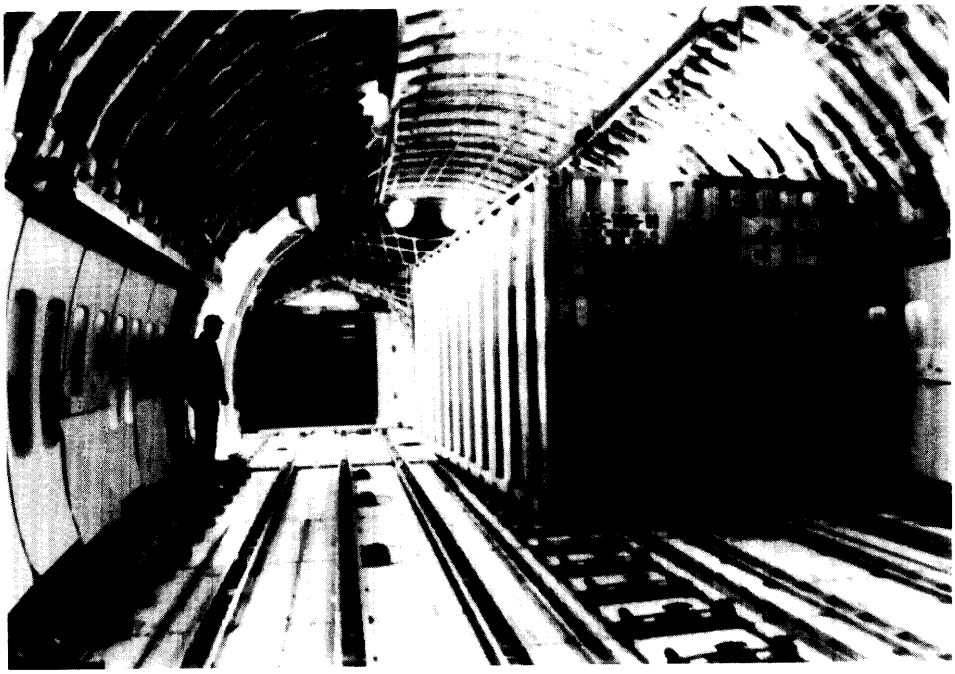

SOURCES: Nawal K. Taneja The u S , *freight Industry,* (Lexington Mass Lexington Boo 9 '9) , 192 **Seaboard World** Airlines

multilevel storage of containers where vertical space is not a restriction (see fig. *6).* Container weight reduces the useful payload of the aircraft, however, and there is a tradeoff between container strength—needed for stacking—and the extra weight required to achieve stacking strength.

Degree of Mechanization

In the late 1980's, if growth rates of the past decade continue, some airport terminals can be expected to have implemented even more advanced systems capable of handling larger and heavier containers than the 3- and 6-meter containers preferred now. Figure 7 illustrates a system which could increase the throughput of containers nearly 20 times over today's level.

Cargo volume is the major determinant of cargo terminal cost. As volume increases it is easier to justify systems that can dramatically reduce cost as well as provide faster and surer service.

Figure 6.— High Mechanization Elevating Transfer Vehicle (ETV)

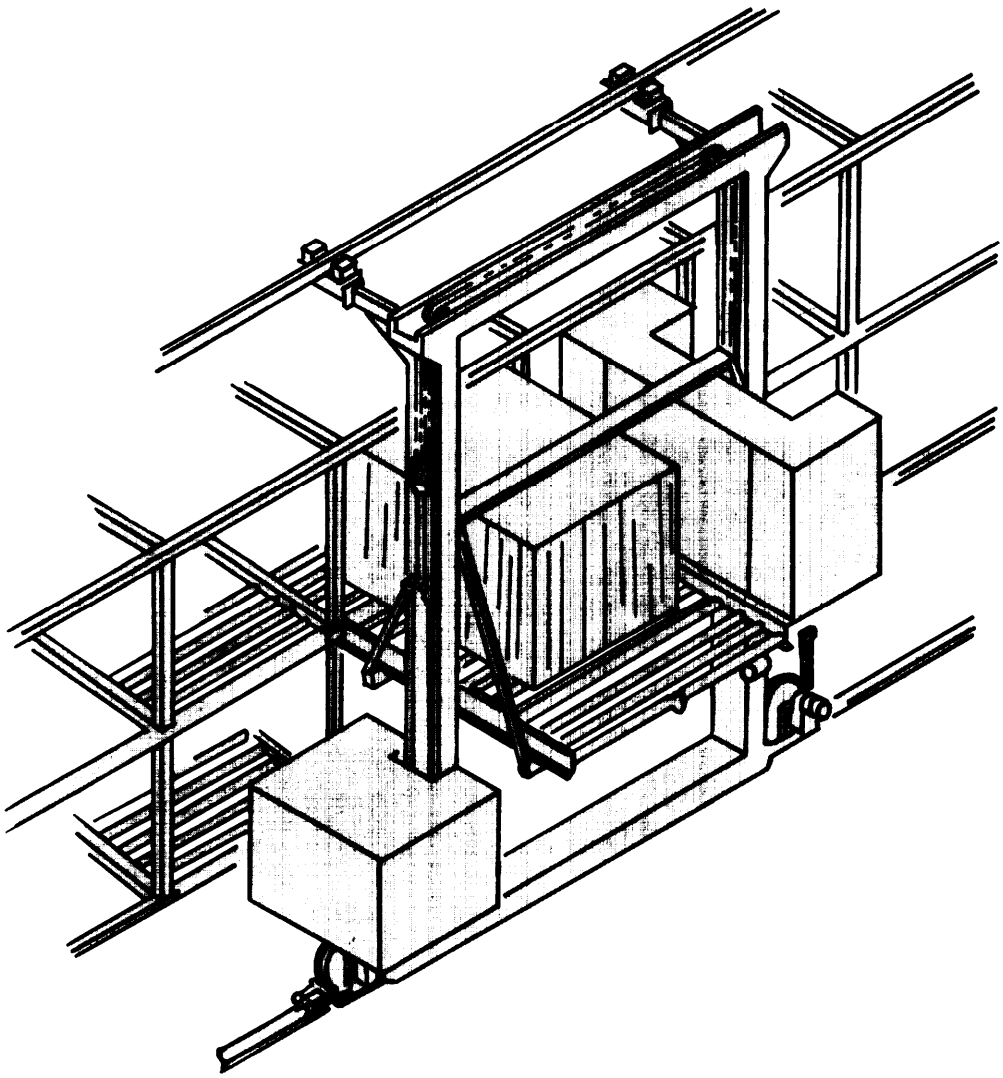

SOURCE McDonnell Douglas Corp , Douglas Aircraft Co., *Cargo Logistics Airlift System Study (CLASS), Volume ///,* **prepared by R. D. Burby and W. H Kuhlman, under NASA contract No 1-14948 (Hampton, Va : Langley Research Center, National Aeronautics and Space Administration, October 1978), p 185.**

g A C g G dS m

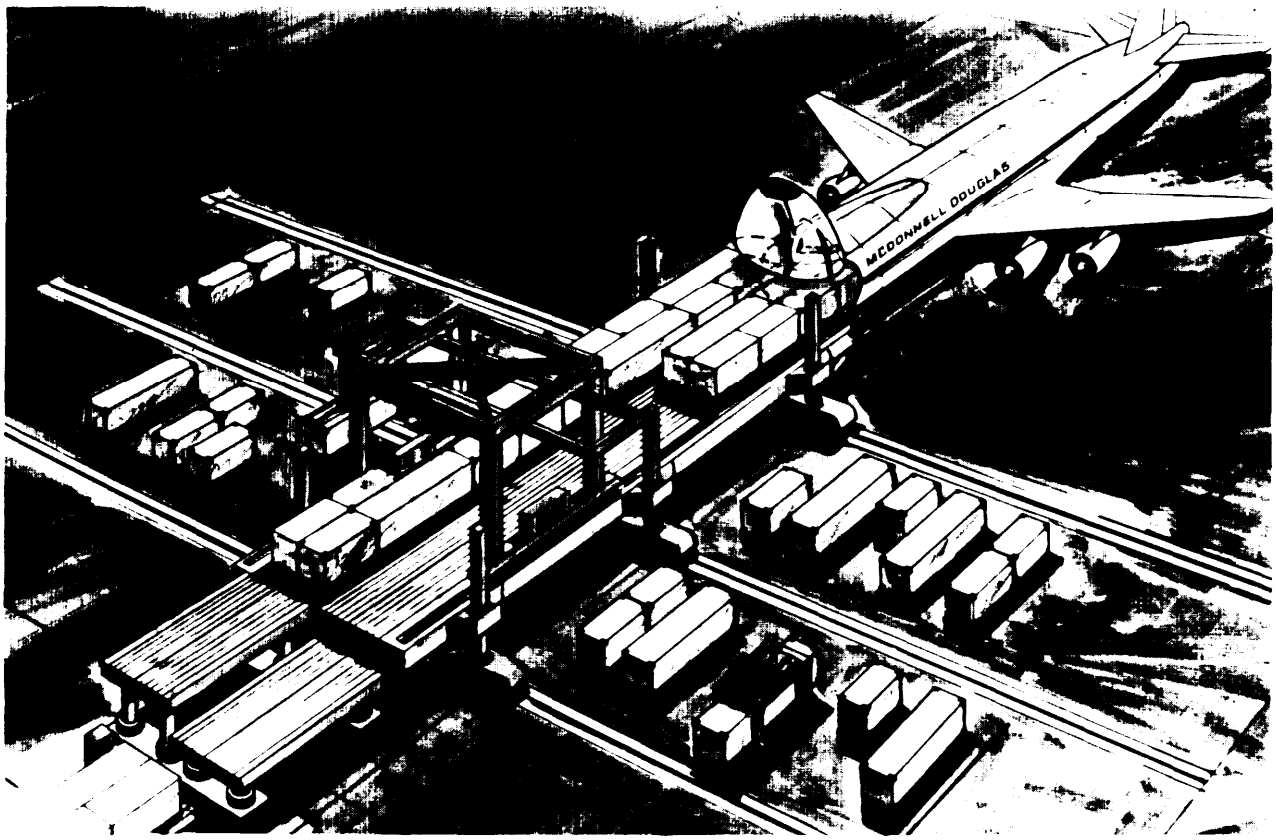

At each stage, mechanization must be designed carefully to minimize breakdowns and to allow the rest of the system to continue to operate in case of a breakdown in one component. Backup systems are also highly desirable. As the TWA case showed, it is possible to install systems too advanced for conditions, for- volume requirements, or for the technological state of the art.

An example of a very successful high volume operation that uses little in the way of mechanization other than conveyor belts is that of the Federal Express Corp., which specializes in providing overnight service for small parcels. [7] It has over 1,000 radio-dispatched trucks that collect packages on call throughout the' day. Alter the close of business, the parcels are brought to the airport stations and flown to Memphis is, Term. At Memphis there is a quarter-mile long sorting facility with a conveyor system capable of handling **130,000** parcels per night. This will expand to **150,000** per night by December 1981. The contents of arriving planes are unloaded into bins that are placed in a series of conveyor belts and sorted by destination. Containers are directly offloaded or onloaded but their contents may be hand sorted.

When the parcels are sorted, the outbound shipments are weighed, and the aircraft are loaded and dispatched. This entire process takes about **6** hours from the time the first airplane arrives until the last departs. More importantly, the time from the arrival of the last airplane to the departure of the first is only 1/1 2 hours. Fed-

[7] Yupo Chan, and Ronny J. Ponder, "The Small Package Air Freight Industry in the United States: A Review of the Federal Express Experience, " *Transportation Research*. September 1979, pp. 221-229.

eral Express now claims to achieve better than a 99 percent overnight delivery service rate for the small high-priority parcels that comprise the bulk of its cargo. Although Federal Express is now introducing a higher level of mechanization, this operation serves as a reminder that mechanization is not an end in itself, but merely one way to get a job done.

Degree of Containerization

Virtually all highly mechanized systems depend on containerization. Several methods of assuring a high level of containerization have been proposed including cost and service incentives to shippers and forwarders that containerize, thus passing on some of the savings from the mechanized system. Shippers who do not containerize could use a forwarder who does. The air carrier can also containerize bulk cargo. Although there is a cost to containerize, it is generally small compared to the savings in handling.

Table 2 contains estimates from a NASA study of the cargo handling cost per pallet or container under varying conditions of storage and handling. This analysis assumes that each system operates at capacity. It can be seen that cutting storage time in half for imports could save nearly 20 percent. Maintaining the shorter storage time while going from the current 40 percent average containerization rate to 70 percent would save an additional 16 percent; going to 100 percent containerization would save over 33 percent with no change in system. Using the single level ETV system saves nothing in unit cost, but the double and triple level ETV systems save roughly *20* percent and *30* percent, respectively.

With *90* percent off-airport containerization, these terminal improvements could reduce indirect operating costs by as much as *30* percent, with a resulting potential overall system rate reduction of up to 11 percent per air cargo shipment. [8]

Flexibility to adjust the size of the containers appears desirable. Currently containers of general cargo air freight are on the average only 54 percent full. [9] This reduces the efficiency of both the containers and the cargo aircraft themselves, which frequently "cube out" rather than "weigh out" — i. e., the available space in the aircraft is filled before its weight limit is reached. Use of containers of excessive size tends to exacerbate this situation, A modular container system has been proposed to minimize this problem. The system consists of a standard 8 by *8* by **20 feet intermodal container** but made up of modules of **40** by **48 by 48 inches, which** could be connected together to form the standard container or some container of intermediate size (see fig. *8).* The design also allows complete disassembly for empty return. Boeing is also designing a version of this same concept.

Table 2.—Relative Cost Per Unit Loading Device[a] Under Varying Conditions

Degree of containerization	International import storage time	Type of cargo handling system	Relative cost
40 "/0	3 day	Current	100 0/0
40 "/0	1.5 day	Current	81 .60/0
70 "/0	1.5 day	Current	75.30/0
100 "/0	3 day	Current	67.70/o
100 "/0	1.5 day	Current	57.7 "/0
100 "/0	1.5 day	Single level ETV	59.90/0
100 "/0	1.5 day	Double level ETV	38.50/o
1000/0	1.5 day	Triple level ETV	28.40/o

[a]e.g. Pallet or **container**

SOURCE McDonnell Douglas Corp , Douglas Aircraft Co. Cargo Logistics *Airlift Systems Study (CLASS), Volume ///,* **prepared by R D Burby and W H Kuhlman, under NASA contract No NAS1.14948 (Hampton, Va. Langley Research Center, National Aeronautics and Space Administration, October 1978) P 222**

Computerization

As the degree of mechanization increases, the degree of computerization is likely to increase as well. The basic functions of a computerized system are to generate the necessary documents, including intermodal waybills, to keep track of the shipments, and to trace lost shipments. However, many other management functions—such as billing and settlement, cargo space allocation, cargo scheduling and counting, and marketing—can be aided by manipulation of the basic data. Many carriers are already operating sophisticated computerized documentation systems. [o]

'Allen H. Whitehead, and William H. Kuhlman, "Demand for Large Freighter Aircraft as Projected by the NASA *Cargo / Logistics Airlift System Study,"* NASA Technical Memorandum 80074 (Hampton, Va.: Langley Research Center, National Aeronautics and Space Administration, April 1979), fig. 3.

'Taneja, op. cit., p. 212.

[10]Douglas, *CLASS, Volume 111,* pp. 188-189; Lockheed, *CLASS, Volume 1,* pp. 1-93.

Figure 8.— Modular Intermodal Container Concept Modcon Array and Adapter

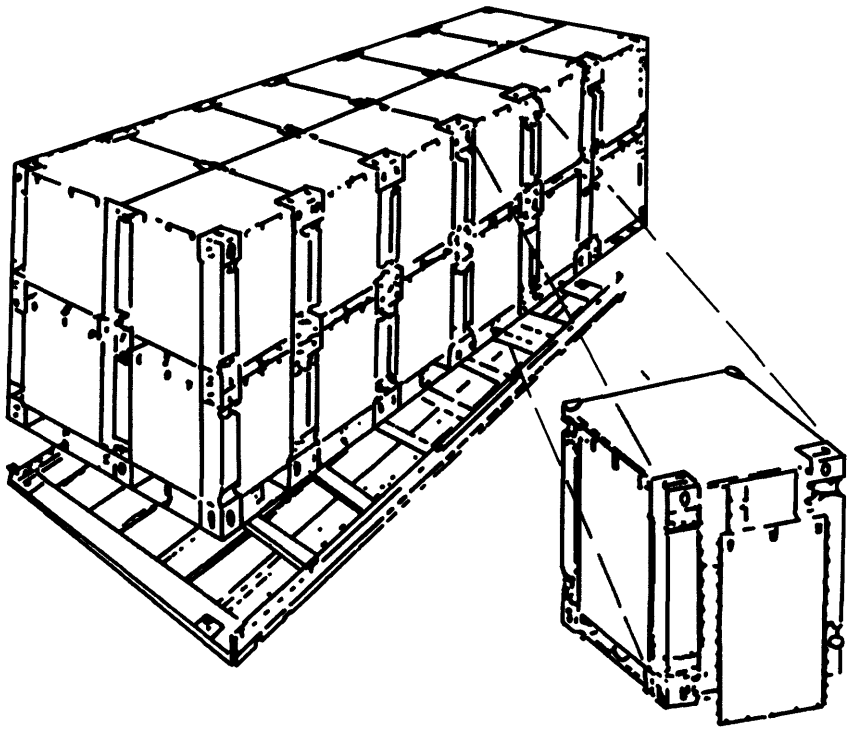

SOURCE J L Weingarten, Closing the *Air* Transport *Gap on Intermodal Containers,* **Publication 73-1 CT-30 (New York American Society of Mechanical Engineers, May 1973), p.6**

PICKUP AND DELIVERY

Because virtually every air shipment begins and ends as a truck movement, it is necessary to improve the interface between truck and the terminal. Although intermodal containers designed to be used by both airplanes and trucks involve some weight penalties, the productivity improvement resulting from using containers is substantial. A study done in Europe found that labor productivity increased from 421 lb per man-hour for handling loose freight to 2,205 lb per man-hour for handling pallets or containers specifically designed for aircraft, an increase of 423 percent. Productivity increased to 4,778 lb per man-hour when intermodal containers were used, an additional increase of 117 percent. [11]

According to a Lockheed-Georgia study, the pickup and delivery (PUD) cost for shipment sizes less than 1,000 lb, using conventional methods, averaged over the 20 largest U.S. cities, is $3.35/100 lb at each end of the *move*ment. This amounts to $134/ton, which when added to the computed average airport-to-airport cost of $175/ton yields a total of $309/ton. The use of an advanced technology aircraft and intermodal containers reduces the PUD cost to $86 and the airport-to-airport cost to $122, for a total cost of $208/ton. If a truckload-sized container is used, the costs reduce to $25/ton PUD, $7/ton container cost, and $122/ton airport-to-airport cost, for a total of $154/ton total. Thus total costs might be halved with advanced, intermodal truckload containers. [12]

[11] Taneja, op. cit., p, 212

[12] Lockheed-Georgia Co., *Cargo Logistics Airlift Systems Study (CLASS) Volume 1* prepared by J. M, Norman, R. D. Henderson, F. C. Macey, and R. P, Tuttle, under NASA contract No. NAS1-1467 (Hampton, Va.: Langley Research Center, National Aeronautics and Space Administration, November 1978), pp. s-s3 to 5-55,

Chapter 5

AIR CARGO OPERATING RESTRICTIONS

AIR CARGO OPERATING RESTRICTIONS

With passage of air cargo deregulation in 1977, most of the controls governing the air side of domestic freight movements were lifted, including tariff controls, market entry restrictions, and limitations on the payload of aircraft flown by the express package delivery carriers.

Not until passage of the Motor Carrier Act of 1980, however, were air cargo carriers and forwarders allowed the unrestricted right to perform their own pickup and delivery services. In the past, they were only allowed to operate their trucks for collection and distribution within 35 miles of the airport. As a direct consequence of this restriction, air cargo carriers were forced to use air links in short hauls where trucks would have been more efficient. Air carrier-owned trucks are now allowed to operate anywhere, as long as the movement of goods on the ground is incidental to their shipment by air. Several air carriers are already taking advantage of this new intermodal flexibility to provide the shipper single carrier integrated service.

Air cargo carriers continue to be adversely affected by airport curfews and other operating restrictions imposed by some airports in this country and by governments abroad. However, the only Federal regulations of major consequence still in place following air cargo deregulation concerned aircraft safety and noise standards, both promulgated by the Federal Aviation Administration (FAA). While regulation of aircraft safety is a widely accepted practice, aircraft noise standards have been far more controversial. As discussed below, these noise standards have led to major, costly changes in the air cargo fleet.

FEDERAL NOISE REGULATION

At the Federal level, the Environmental Protection Agency (EPA) is responsible for developing transportation noise programs. EPA recommends noise standards to the FAA, which can either adopt them or develop its own. In *1969,* the FAA promulgated part 36 of the Federal Aviation Regulations (FAR 36), stating Federal aircraft noise regulations. These regulations originally set noise limits for newly designed civil turbojet aircraft over 75, OOO lb which first went into production after 1969 (these included the DC-10, L 1011, B-747-200, and A-300, among others). In 1973, the FAA extended FAR 36 to include new production units of older aircraft such as the 707, 727, 737, DC-8, DC-9, and most business jets.

In December 1976, the FAA promulgated FAR 91 which required virtually the whole fleet of jets over 75, OOO lb (including previously exempt aircraft) to meet FAR 36 noise standards by 1985. Airlines were given the option of retrofitting their noncomplying aircraft with sound-absorbing materials, replacing the engines, or replacing the aircraft.

Amendments to FAR 36 in March 1977 and April 1978 require that the next generation of aircraft meet more stringent noise standards (stage 3 noise limits). These new standards are not presently retroactive to the types of aircraft already certificated.

Aircraft noise regulations are controversial, because the measurement of actual noise impacts is highly subjective and because the cost of compliance will be high. The airlines do not want to spend an estimated $4OO million to retrofit and reengine the 1,600 noncomplying aircraft now in service in order to meet the 1985 deadline. They would prefer to gradually replace these with new-technology aircraft that would not only be

"'Airlines Face Huge Bills for Controlling Noise, Pollution, " *Air Transport World,* July 1978, p. 16.

quieter, but would also be more fuel efficient and would comply with pollutant emissions standards. Because an airplane's operating lifetime is at least 10 to 15 years, and in some cases up to 30 years, most of the noncomplying aircraft would not be subject to normal replacement before the 1985 deadline. In fact, some observers estimate that if it *were* not for the provisions of FAR 36 standards, 60 percent of the present noncomplying fleet could still be in operation in 1990. The costs for accelerated replacement of these aircraft have been estimated as high as $8 billion.[2]

There have been attempts in Congress to delay the existing compliance deadline and to prevent the FAA from imposing more stringent noise standards. These have been offset by a strong DOT stance favoring current noise rules. The final noise control bill,[3] however, was a compromise. For example, it requires that all four-engine aircraft comply with FAA FAR 36, but it allows operations of noncomplying two-engine jets for an additional year if a contract for a stage 3 replacement has been signed by January 1, 1983. At least one major carrier has indicated it may discontinue its all-cargo service rather than undertake the expense of retrofitting its existing fleet or purchasing new aircraft.

[2] Ibid.

[3] Aviation Safety and Aircraft Noise Abatement Act of 1979, Public Law 96-193.

AIRPORT OPERATING RESTRICTIONS

Airport operators, under the FAA's "Aviation Noise Abatement Policy,[14] have a responsibility to help manage noise through proper location and design of airports, cooperation with local authorities to insure that surrounding land is reserved for compatible uses, and construction of noise-reducing barriers.

In various locations, flight operation procedures have been modified to reduce noise. Some airports impose limits on ground operations, for example designating permissible areas and times for engine runups of jet planes. Another alternative is to require minimum altitudes or use of stepped approaches and steep climbouts. Another strategy is to prescribe preferred runways and approach paths which will minimize the impacts of noise on populated areas, or rotational runway programs which disperse the noise equally over several populated areas,

A substantial number of airports throughout the world have imposed some kind of restrictions on airport operations in order to reduce noise. As can be seen in table 3, of the *140* respondents to a survey by the Airport Operators' Council International, *85* reported having some sort of noise abatement program.

[14] "Aviation Noise Abatement Policy" (Washington, D. C.: U.S. Department of Transportation, Office of the Secretary, 1976).

Table 3.—Airport Operating Restrictions, 1979

Type of airport	Total airports responding	Number with noise abatement programs
Large U.S. hubs	24	15
All other U.S. airports ., . .	76	35
Large foreign hubs	40	35

SOURCE: *Report on Aircraft Noise Reduction Operating Procedures* (Washington, D. C.: Airport Operators Council International, 1979).

NIGHT CURFEWS

The most drastic airport operating restriction is prohibiting the operation of jet aircraft during certain hours of the night. Although an aircraft is no noisier at night than it is during the day, the noise is considered more annoying during these quiet hours. Thus, at first glance, a night curfew seems a logical way to greatly improve the noise environment around an airport. Only three U.S.

airports in the top *25* by air cargo tonnage have imposed curfews: Minneapolis/St. Paul (Number 18), Washington National (Number 21), and Baltimore-Washington International (Number *23).* Internationally, 15 major airports have curfews.

The right of a U.S. community to curfew air operations has often been contested in the courts, Although some local ordinances controlling aircraft have been upheld, many have been declared unconstitutional because they posed a threat to interstate commerce and infringed on the Federal Government's ability to regulate the airways. Many of the existing curfews are, in fact, voluntary agreements between the airport authority and the carriers, arrived at in an effort to avoid litigation or bad publicity.

Night curfews actually disrupt only a small amount of an airport's total daily activity—from 5 to 10 percent of takeoffs and landings for most airports (Honolulu is exceptional in that 16 to *24* percent of its traffic is during late night hours).[5] However, in the case of air cargo, night curfews are of particular concern because so much cargo is moved at night; the hours of 11 p.m. and 6 a.m. are often referred to as "prime-time lift. " About 41 percent of San Francisco's all-cargo operations take place between 10 p.m. and *6* a.m.' At JFK and Newark Airports in 1977, 35 percent of all freight moved between 10 p.m. and 7 a.m.; 94 percent of this was on all-cargo flights. '

Many shippers have come to depend on nighttime air cargo service for movement of high-value or perishable goods. Shippers tender goods to the forwarder or carrier toward the close of the business day so that they can be shipped at night and be available at their destination in time for the next day's market. From the shipper's point of view, the later the plane departs, the better. A study by the Massachusetts Port Authority found that the later night flights were more economically successful than earlier ones. An experiment to induce shippers to use earlier flights by offering them lower rates was not successful.[8]

An airport curfew could result in delays of 12 to 36 hours for some of these perishable or high-value goods. Shipments arriving at the airport after curfew would be held overnight and sent off the next morning. In many cases they would arrive too late for that day's market and would remain in storage until the following morning. Such a delay would eliminate air express services almost totally, and severely cut the demand for air movements of produce, such as cut flowers, which are not refrigerated when sent by air. The U.S. Government is a major user of nighttime air cargo service with about 60 percent of intercity mail planned for overnight delivery by air. [9] A study for the Massachusetts Port Authority found that even with optimum rescheduling, 6 to 8 percent of the mail handled in Boston would be subject to delays if an 11 p.m. to 7 a.m. curfew were imposed. [10]

Curfews at a major airport could have a significant effect because of the highly concentrated nature of the air freight industry. Only 23 U.S. cities have daily scheduled freighter service (not counting express service), and of these, five major airports handled more than half of the total cargo tons. [11] Closing even one major airport at night would greatly affect the others. For example a 10 p.m. to 7 a.m. curfew in New York would impose an unintentional 2:30 p.m. to 10:30 p.m. curfew on takeoffs of New York-bound aircraft in Los Angeles. In international travel, because of the Hong Kong and Tokyo curfews, around the world flight beginning in New York takes 45 hours. A curfew added at one other stop—say Karachi or Delhi—adds 21 more hours to the trip. [12] Although the latter ex-

---

'Douglas A. Fisher, *An Analysis of Airport Curfews and Their impact on Airline and Air Cargo Operations,* dissertation, Graduate School of Business, Indiana University, 1977, p. 1.

[6]Ibid.

'John E. Wesler, "Keynote Speech," in Raymond A. Ausrotas and Nawald K. Taneja (eds.), *Air Freight; The Problems of Airport Restrictions,* FTL report No. R79-1 (Cambridge, Mass: Flight Transportation Laboratory, Massachusetts Institute of Technology, 1979), p. 42.

'Fisher, op. cit., p. 113.

'U.S. Postal Service, Air Transportation Division, telephone interview, Jan. 14, 1980.

[10]Guy Goodman, *PotentiaJ Effects of Curfews on Scheduling and Delays,* SAE Technical Paper Series No. 780545 (Warrendale, Pa.: Society of Automotive Engineers, 1978), p. 6.

' *'Air Cargo Statistics, U S. Scheduled Airlines, Total Industry, 1978* (Washington, D. C.: Air Transport Association, 1978), p. 2.

"Goodman, op. cit., p. 6.

ample is a passenger flight, the effect on cargo flights, which tend to originate or end at night, would be more severe.

Economic Impacts of Curfews

Night curfews can have adverse economic impacts on shippers, freight forwarders, airlines, the airport itself, and the local economy. Table 4 summarizes estimated impacts for 1975 when an 11 p.m. to 7 a.m. curfew was proposed for Boston's Logan Field. As can be seen in the table, shippers would pay up to an additional *$23* million annually due to increased transportation and warehousing costs.

The types of shippers most affected by the curfew would be those specializing in perishable or high-value goods. Some firms have centralized their manufacturing and warehousing facilities near a good airport and rely on air freight to make overnight delivery of their products to customers or branch offices throughout the country. Delays resulting from curfews would cause severe disruption in these distribution patterns, and might make it difficult for these firms to remain competitive with regional firms whose factories are located close to retail markets.

Freight forwarding companies, which account for over 40 percent of domestic air freight revenues, make extensive use of night flights. Emery Air Freight, the largest forwarder in the business, moves almost two-thirds of its traffic between 11 p.m. and 3 a.m. Many consider overnight delivery to be a key selling point of air freight forwarder's service. [3]

Boeing has estimated that in a "typical" industrial city like Philadelphia, Cleveland, or Minneapolis-St. Paul about 17 percent of air freight is curfew sensitive and that 10 percent of curfew-sensitive cargo would be lost totally if a curfew were imposed; that is, the goods would not be manufactured because they could not be distributed at a reasonable price. Assuming traffic of *50,000* tons of air cargo per year at a value of $10/lb, this could mean a total of $17 million in goods might not be made or sold because of the curfew. 14

The elimination of airport activity at night would result in a loss of jobs in the airlines, freight forwarders, and the various airport concessions. According to a study by Guy Goodman, an estimated 1,114 jobs would be lost in Boston as a direct result of curfew, as shown in table 4.

In addition to these direct effects, indirect costs and multiplier effects are anticipated. The Boeing study, using a regional multiplier of 1.8,

[3] Fisher, op. cit., p. 121.

"Raymond A. Ausrotas, and Nawal K. Taneja (eds.), *Air-Freight: The Problems of Airport Restrictions,* FTL report No. R79-1 (Cambridge, Mass: Flight Transportation Laboratory, Massachusetts Institute of Technology, 1979), pp. 32-35.

Table 4.—Annual Direct Efforts on the New England Economy of an 11 p.m. to 7 a.m. Curfew at Boston, Mass.

	With minimum rescheduling	With schedules reoptimized
Shippers		
Transportation, freight penalty (000)	**$20,100**	$18,600
Increased warehousing (000)	$2,930	$2,620
Transferred warehouse jobs	**440**	**280**
Airlines		
Job loss	468	244
Payroll loss (000)	$8,882	$4,687
Freight forwarders		
Job loss	125	53
Payroll loss (000)	$1,584	$672
Concessionaires		
Job loss		
Payroll loss (000)	$589	$336
Passengers		
Increased fares (000)	$1,966	$1,966

SOURCE Guy Goodman, *Potential Effects of Curfews on Scheduling and Delays,* **Technical paper series no 78045 (Warrendale. Pa Society of Automotive Engineers. 1978), P 6**

estimated that $30.6 million worth of business would fail to be generated in the "typical" city because of a curfew.[15] The Massachusetts study estimated that $373 million in lost sales potential and 13,058 jobs would ultimately be lost in New England in the event of an 8-hour curfew. [16]

Benefits of Curfews

Little research has been done on the benefits of curfews for people living near airports. Studies of noise annoyance have found that interference with listening and speaking is the most annoying aspect of aircraft noise, while interference with sleep and rest is second. It is generally assumed that this annoyance would be greater at night when ambient noise levels are lower and aircraft noise is more noticeable.

On April 29, 1973, landing patterns at Los Angeles International Airport were reversed between 11 p.m. and *6* a.m. so that planes approached over Santa Monica Bay rather than over populated areas to the east. This procedure was followed for a year before further modifications were made. The change reduced noise exposure east of the airport by about *50* flights per night out of an average 657 landings per 24-hour day. Surveys were conducted in the high and moderate noise exposure zones immediately before, immediately after, and about one month after the change in operations. [17] Before the change, 92 percent of the respondents in the high-exposure area reported some annoyance with aircraft noise: **90** percent of these said it interfered with listening to radio, TV, or hi-fi and 20 percent said it interfered with their sleep.

Although the objectively measured change in noise exposure seemed large—averaging around *50* dB(A) at night as compared to around 70 dB(A) before the change—little or no consistent change in response was found in the Los Angeles interviews. In the medium-exposure area, there were slight decreases in reported annoyance levels. In the high-exposure area, the number of persons claiming that aircraft noise interfered with their sleep actually went up. The third round of interviews, conducted between a month and *6* weeks after the change, showed no significant changes compared with the first round. Overall, almost *56* percent of respondents replied they had not noticed a change in the number of flights; *20* percent noticed fewer; and *20* percent said they noticed more. Many of those who reported noticing fewer flights were aware of the new flight restrictions from newspapers or other sources.

The perceived benefit of reduced noise levels in this experiment was minimal. However, the temporary discontinuation of *all* nighttime flights at airports in Hong Kong and San Diego to permit runway resurfacing was so popular with the public that they were turned into permanent curfews when the airports attempted to resume around-the-clock operations after the work was completed.

The Federal Role

The FAA has the responsibility for regulating noise levels at their source—the aircraft themselves. The local authorities at a particular airport have the responsibility for controlling the noise levels at their airport.

The appropriate Federal role in the curfew issue is not clearly defined. On the one hand, the issue appears to be a local one—a conflict between local home owners and their airport. On the other hand, if local citizens are able to establish night curfews in one or more major air freight cities, they could essentially shut down night cargo flights and create a massive change in modal choices.

In 1977 the Air Transport Association of America (ATA) petitioned the FAA to adopt regulations governing airport noise abatement plans. Essentially, the ATA petition called on the FAA to utilize the provisions of the Federal Aviation Act of 1958, as amended, to disapprove local noise abatement rules related to air transportation, which were claimed to be:

1. inconsistent with the highest degree of safe*ty* in air commerce and air transportation;
2. inconsistent with the efficient utilization of navigable airspace;

[15] Ibid.
[16] Goodman, op. cit., p. 6.
[17] All survey results reported in S. Fidell and G. Jones, "Effects of Cessation of Late-Night Flights on an Airport Community," *Journal of Sound and Vibration* vol 42, 1975, pp. 411-427.

3. unduly burdensome to interstate or foreign commerce or unduly interfering with the national transportation system;
4. unjustly discriminatory. For example, a ban on jet aircraft only would be discriminatory, since some jets are quieter than some propeller aircraft; and
5. in conflict with the Federal Aviation Administration's statutory regulatory authority. [18]

The FAA has not taken the actions suggested by ATA, but it has challenged proposed airport plans through advisory opinions and statements in local public hearings. The FAA contends that the field of airport noise abatement has not been totally preempted, and that the Federal Government shares responsibility to some degree with State and local authorities. How these various responsibilities will be sorted out is still unresolved.

Operating Restrictions Overseas

The airport curfew is only one of several types of operating restrictions imposed on U.S. carriers by foreign governments. Some of the restrictions are regarded by U.S. carriers as clear-cut attempts by foreign countries to inhibit competition with their own national airlines. For example, U.S. carriers report that one European country, which owned no 747 freighters, refused landing rights to foreign 747 freighters until an arrangement was worked out to lease them a 747 for part of the week. Another European nation insisted that an airline could only provide pickup and delivery service in towns where it also offered passenger service. Since the local carrier served many more cities than the U.S. carrier, competition for cargo business was decidedly one-sided. In this particular instance, the problem was overcome with U.S. Government assistance. In another example, one Asian country requires elaborate cargo clearance procedures for foreign carriers only that are both costly and time-consuming. In another instance, the national carrier is allotted prime terminal space and is the only carrier allowed full control of its freight from terminal to warehouse. These constraints seriously jeopardize the economic viability of U.S. carriers in international service. Continuing U.S. Government efforts appear needed in order to address such restrictions.

[18] "Clifton F. Von Kann, "Keynote Speech, " in Ausrotas and Taneja, *Air Flight; The Problems,* p. 52,

Chapter 6

LIGHTER-THAN-AIR VEHICLES

Chapter 6

LIGHTER-THAN-AIR VEHICLES'

Lighter-than-air vehicles (LTAs), or airships, were very active from the first years of this century until about 1960. During World War I, each side operated about 100 airships. They ranged from the smaller (100,000 ft^3) non-rigids to larger (2.5 million ft^3) rigids. In 1933, the Good year Zeppelin Corp. completed two rigid airships, Akron and Macon, for the U.S. Navy; these were the largest airships built to that date, and two of the largest airships ever built.[2] Four of the largest non-rigid airships ever built (ZPG-3W) were completed in 1960 also by Goodyear.

Rigid airships are built of a lightweight rigid structure with an outer fabric of treated cloth. The lifting gas is contained in several indepen dent gas-tight cells. In contrast, the non-rigid airship consists merely of an envelope (hull) typically of a coated fabric filled with a lifting gas and pressured slightly above that of the outside atmosphere. Several air compartments within the hull are used to maintain a constant pressure and provide ballast by ducting air in and out as needed.[3]

'We wish to thank D. E. Williams of Goodyear Aerospace Corp. for his assistance in the preparation of this chapter.

[2]Goodyea r Aerospace Corp., Feasibility *Study of Modern Airships, Vol III Historically Overview (Task 1).* p r e p a r e d b, Gerald Faurote, NASA report No. CR-137692 (Moffett Field, Calif.: Ames Research Center, National Aeronautics and Space Administration, August 1975), pp. 2-3,

[3]1bid,, pp. 4-8.

LONG RANGE AIRSHIPS[4]

Both rigid and non-rigid airships have been used extensively as long endurance/long-range platforms to carry payloads which are essentially fixed (constant weight). Due to the difficulty in managing excess buoyancy, applications with widely varying payload weights, such as cargo transport, were not pursued; passenger service was considered more suitable. In addition, limited ability to exercise control at low speed complicated ground handling and made terminal operations cumbersome.

The rigid airship declined in popularity after the Hindenburg disaster in 1937. No doubt the disaster itself had an effect, but there were more fundamental causes at work. In the 1930's, the airplane surpassed the airship in speed, productivity, operating cost, and even safety. In 1937, the most advanced passenger airplane, the DC-3, had double the cruising speed of the most advanced airship, the Hindenburg; the DC-3 also had total operating costs per seat-mile between one-half and one-third those of the Hindenburg. Thus, although the Hindenburg disaster and the approach of World War II hastened the end of even the commercial passenger carrying airship operations, it is clear that the fundamental cause was the growing inability of the airship to compete economically with the airplane.

The economic nonviability of the long-haul airship can be better understood by noting the standard computation of a vehicle's productivity: payload by speed. The airplane came to far surpass the airship's speed; the present-day ratio is roughly four to one for a wide-bodied jet versus an airship. This means that a jet with the same payload as an airship can transport several times as much freight in the same time as the airship (although less than fourfold because of the terminal time at each end).

The productivity difference is reflected in direct operating costs. Direct operating costs per available ton-knot of an airship based on the

'This discussion is based **on Mark D. Ardema, "Economics** of Modern Long-Haul Cargo Airships, " paper presented at Lighter-Than-Air Systems Conference, Aug. 11-12, 1977, AIAA paper No. 77-1192

latest technology are calculated to be from 50 to 150 percent higher than those of an equivalent size modern fanjet transport airplane. One study concluded that 747 costs were 21.6 cents per revenue ton-mile and airship lower bound costs were 35.7 cents per revenue ton-mile, assuming a 55 percent load factor and a 25 percent profit before taxes.[5] Other studies project airship costs to be four times those of airplanes. These studies assume the existence of adequate numbers and locations of airports.

There are other advantages to higher speed besides increased productivity. One is that a fast vehicle is less susceptible to weather delay than a slower one because head winds have less effect on ground speed, and adverse weather can be more easily circumvented. Airplanes also have the very important customer appeal of shorter trip times, which is a vital factor in passenger service and is also important for most air cargo service.

Higher fuel prices raise airplane operating costs more than those of the more fuel-efficient airship. However, surface transportation—trucks, rail, and some ships—is more fuel efficient than airships. Thus higher fuel costs alone are not likely to appreciably enhance the airship's competitiveness.

Airships, as they are presently conceived, are not competitive with airplanes for the long-range transportation of cargo. There are, however, other roles for which a modern airship or a hybrid airship is well suited. Airships have definite advantages over airplanes in short distance hauling of very heavy or bulky cargo, and for jobs that require long endurance in the air, such as certain types of patrol. Airships can also be configured to perform vertical lift operations more economically than helicopters and can do so with much heavier and larger payloads. If airships do make the comeback some predict, it probably will be because they solve new transportation problems and not because they compete directly with existing types of long-range aircraft.

[5]1bid., p. 93.

POTENTIAL PROPERTIES OF MODERN AIRSHIPS

Under a recent National Aeronautics and Space Administration (NASA) -funded study, the Goodyear Aerospace Corp. estimated that a 26 percent reduction in empty weight as compared to the 1933 Macon could be achieved using modern plastic and metallic materials. The empty-weight-to-gross-weight ratio can be reduced from 0.59 to about 0.40. The amount of payload would depend on the amount of fuel taken on, which depends on the requirements of the mission.[6] Such technological advances can substantially improve the payload of modern airships of the ZPG-3W and Macon designs.

In addition, studies conducted by Goodyear for NASA, the U.S. Coast Guard, the Alberta Ministry of Transportation, and the U.S. Air Force show that operational versatility as well as operating economies can be substantially improved by marrying modern propulsion technologies to rigid or non-rigid conventional airships. The propulsion system might be conventional fan/prop units, which would improve cruise performance and terminal operations, or multiple rotor units to provide precision hover capability for lifts ranging from 20 to 150 tons. Such an airship could operate into and out of remote and unprepared areas at substantially lower costs than current alternatives with payloads substantially larger or heavier than existing air lift methods.

'Goodyear, op. cit., pp. 118-126.



Photo credit *Goodyear Aerospace Corp*

MODERNIZED CONVENTIONAL AIRSHIPS (MCA)

One of the inherent characteristics of conventional airships has been their ability to fly at slow speed with little expenditure of fuel. This could make them appropriate for surveillance missions of relatively long duration, provided ground-handling and basing could be simplified, Modernization of these ships with efficient vectorable propulsion could address this problem. In addition, it would provide the airship with the ability for vertical takeoff and landing (VTOL) and coarse hovering, which would enable it to accomplish tasks not possible for fixed wing aircraft.

An MCA of this design would have takeoff and landing characteristics that approach those of a helicopter, together with range and payload capabilities well beyond that of the helicopter.

The ability of such an airship to carry moderate payloads (20,000 to 80,000 lb) relatively long distances and to service unprepared sites would enable it to provide transportation for people or cargo in many locations for which it is impractical to use conventional transportation.

SURVEILLANCE ACTIVITIES

In 1957, a U.S. Navy airship set an endurance record of 11 days aloft and 9,000 miles traveled without refueling. [7] This is well beyond what is possible with fixed or rotary wing aircraft. The LTA also has low vibration level, low noise level, and low pilot workload, all of which reduce crew fatigue. Some suggested applications have been:

1. *Mineral detection.* Armed with the necessary instruments, airships used in large mineral surveys could outperform airplanes in both accuracy and costs. Computers and a large amount of equipment could be put on board. The steady flight and low vibration would contribute to accuracy. [8]
2. *Pollution watch.* A small airship, controlled by a radio signal and carrying several hundred pounds of detection instruments and television cameras, could patrol the space above a city. The air pollution level of any chosen point could be monitored accurately, and signals from pollution sources could be transmitted to the control center on the ground. [g]
3. *Border lookout.* Airships equipped with electronic surveillance instruments could serve as lookout posts and communication links between patrol units and command posts in key border areas.
4. *Radar platform.* The U.S. Defense Department recently installed special target-detecting radar on stationary ballons to spot even very slow movements of troops. The U.S. DOD estimates that the cost of using stationary ballons for day/night low altitude observation is only one-tenth the cost of using airplanes. The mobility of an airship combined with its tolerance for a broader range of atmospheric and environmental conditions would greatly expand this capability.
5. *Police patrol.* Both manned and unmanned LTA's have been tried for police patrol. Goodyear and the city of Tempe, Ariz. independently experimented with manned dirigibles. One experiment included the development of remotely controlled miniblimps of up to 10,000 ft^3, with downward pointed TV cameras. This application is expected to have several economic and operational advantages over other patrol and surveillance systems. Introduction of such a system has been considered in Southern California.

An MCA of about 875,000 fts has been assessed by the U.S. Coast Guard to be economically and operationally effective in satisfying an array of missions, including monitoring of buoy placement, surveillance activities, port traffic control, and monitoring ice conditions on the Great Lakes.

[7] Letter dated Mar. 27, 1980, from K. E. Williams, U.S. Coast Guard.

[8] Hsu Te Pao, "Prospects of Airship Applications" (originally published in Hang K'ung Chih Shih, Peking, No. 8, 1976, pp. 30-32), translation prepared by Foreign Technology Division, FTD-ID(RS)T-2043-77 (Dayton, Ohio: Wright-Patterson AFB, Foreign Technology Division, December 1977), p. 607.

[9] Ibid., p. 8.

[10] Ibid., p. 11.

[11] G. R. Semann, "Unmanned Blimp Patrol," paper No. 79-164, 1979 AIAA Lighter-Than-Air Systems Technology Conference.

HEAVY LIFT AIRSHIPS (H LA)

The Heavy Lift Airship (HLA), a concept first proposed by Piasecki Aircraft Corp., consists of a helium-filled airship hull with propulsive lift derived from conventional helicopter rotors. The buoyant lift essentially offsets the empty weight of the vehicle; thus all the rotor thrust is available for lifting the useful load, maneuvering, and controlling the vehicle. [12] The purpose of the HLA is to vertically lift and haul heavy outsized cargo. The Piasecki version of this concept is shown in figure 9. Piasecki is now under contract to the Navy to build and demonstrate in flight a prototype of this aircraft.

Goodyear has also designed a 75-ton HLA (figure 10). It is estimated to have a range of 300 nautical miles, and can be ferried without payload, with rotors folded, for over 3,000 miles. Without the buoyance, the collective payload capability of four equivalent helicopters at their rated 100 mile range would be less than half that of the HLA. [3]

The HLA fuel consumption for a design speed of 80 knots with design payload of 150,000 lb is estimated to be 0.22 gal/ton-mile. Without the benefits of buoyancy, fuel requirements would be on the order of 0.52 gal/ton-mile.[14]

Table 4 indicates the estimated numbers and required payloads of HLAs in several potential markets.

The two primary markets for the HLA appear to be logging and unloading cargo at congested ports. The environmental benefits of this use of the HLA when used in remote locations has been described as follows:

> In a study of the potential application of advanced aircraft in developing countries sponsored by NASA, it was found that the ecology of the tropics can be seriously altered if normal methods (i. e., timber roads) are employed to gain access to certain natural resources—such as forests. Air lifting can mitigate these effects provialed the aircraft is capable of handling the loads. A heavy lift-type airship showed significant benefit for such applications. Similar ecological constraints also exist in Northern regions subject to heavy winter freezes and surface thaw conditions. These were discussed in studies by the Canadian Province of Alberta which also pointed out that undeveloped areas do not contain the surface transportation systems required to bring equipment into such regions or remove the resources. Furthermore, the costs of building adequate rail or road systems for short term use did not justify such construction. [5]

Interest in LTA continues to be active. In July 1981, the fourth international conference on

Figure 9.—Heavy Lift Airship Concept

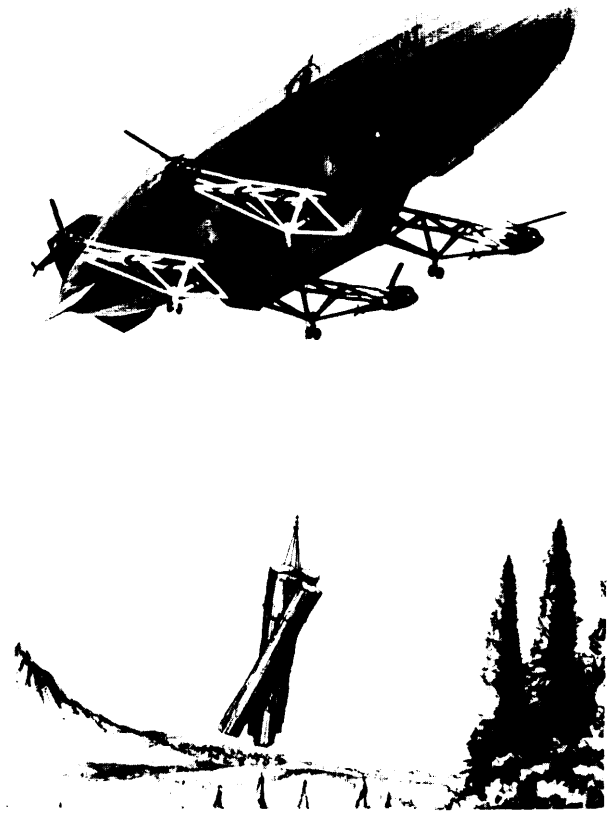

SOURCE: Piasecki Aircraft Corporation,

[12] Gooctyear Aerospace Corp., *Feasibility Study of Modern Airships, Phase 11– Executive Summary,* NASA report No. 2922 (Moffett Field, Calif.: Ames Research Center, National Aeronautics and Space Administration, November, 1977), pp. 7-8.

[3] Ibid., p. 12.

[14] Ibid., p. 9.

[5] Goodyear Aerospace Corp., Modern Airships Program, communication, March 1980.

Figure 10.—Heavy Lift Airship—General Arrangement and Selected Performance Characteristics 75 Ton Payload[a]

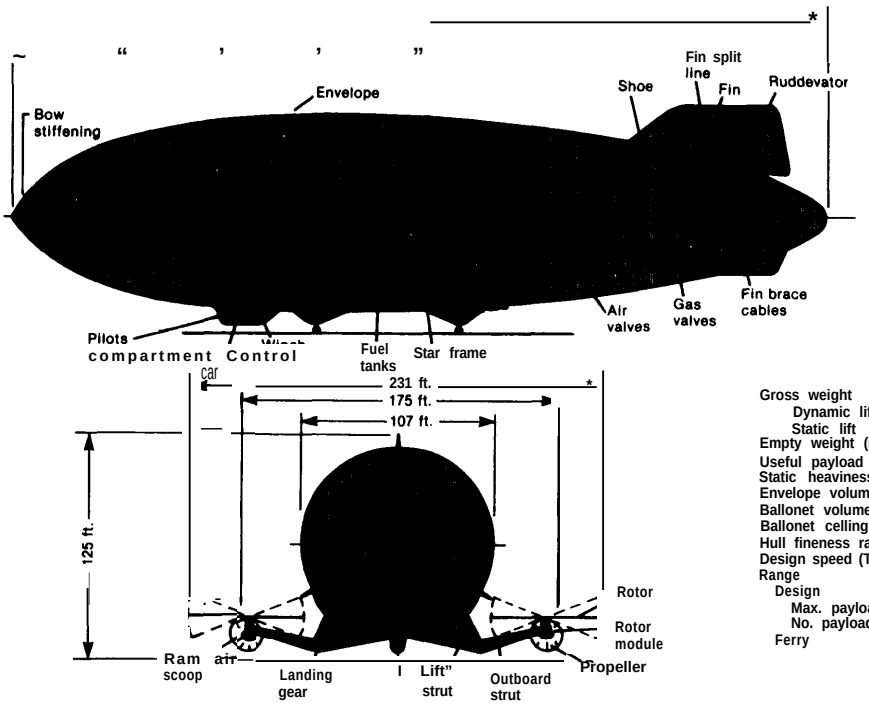

Gross weight	290,807 lbs.
Dynamic lift	150,000 lbs.
Static lift	140,807 lbs.
Empty weight (including EREW, residual fuel)	140,564 lbs,
Useful payload	150,000 lbs
Static heaviness	
Envelope volume	2,600,000 ft³ (unstretched)
Ballonet volume	650,000 ft³
Ballonet celling	9,500 ft
Hull fineness ratio	418
Design speed (TAS)	80 knots
Range	
Design	
Max. payload	300 nm
No. payload	1,137 nm
Ferry	3,180 nm

[a]5,000 ft altitude, standard day, one engine out

SOURCE: Goodyear Aerospace Corp., Modern Airships Program, Akron, Ohio.

LTA systems technology was held in this country. The three-day conference, sponsored by the American Institute of Aeronautics and Astronautics (AIAA), received over 30 papers describing work presently being funded by the National Forest Service, NASA, the Navy, and the Coast Guard as well as work underway in Canada, England, France, and Germany. Projects currently in progress range from theoretical analysis, through subsystem and component development to construction of a proof-of-concept HLA.

0