Selected Technical and Economic Comparisons of Synfuel Options

October 1982

NTIS order #PB83-147363

INCREASED AUTOMOBILE FUEL EFFICIENCY AND SYNTHETIC FUELS

Alternatives For Reducing Oil Imports

Background Paper #2

Selected Technical and Economic Comparisons of Synfuel Options

October 1982

CONGRESS OF THE UNITED STATES
Office of Technology Assessment
Washington, D.C. 20510

Preface

This volume contains papers written for OTA to assist in preparation of the report ***Increased Automobile Fuel Efficiency and Synthetic Fuels: Alternatives for Reducing Oil Imports.*** OTA does not endorse these papers. In several instances, the OTA report reaches somewhat different conclusions because of additional information which was obtained later. These papers, however, may prove valuable for readers needing more detailed or specific information than could be accommodated in the final assessment report, and are being made available for such purposes.

SELECTED TECHNICAL AND ECONOMIC COMPARISONS

OF SYNFUEL OPTIONS

FINAL REPORT

April 1981

Prepared For The

Office of Technology Assessment

United States Congress

E. J. Bentz & Associates Inc.

7915 Richfield Road

Springfield, Virginia 22153

NOTICE

This report was prepared as an account of work sponsored by the Congress of the United States, Office of Technology Assessment. Neither the Congress of the United States nor the Office of Technology Assessment, United States Congress, nor any of its employees, nor any of their contractors, subcontractors, or their employees, makes any warranty, expressed or implied, or assumes any legal liability or responsibility for the accuracy, completeness, or usefulness of any information, apparatus, product or process disclosed, or represents that its use could not infringe privately owned rights.

ejb&a

EXECUTIVE SUMMARY

Study Scope and Content

This study is a comparative technical and economic assessment of selected synfuel technologies. It is a component part of a much larger study being conducted by the OTA on energy options. A key purpose of this study is to provide technical and economic comparisons among selected synfuel technologies which, to the extent possible, provides a background and basis which may assist the OTA in its policy deliberations. The synfuel technologies have been selected in consultation with and guidance from the OTA. They generically represent: oil shale production; direct and indirect coal liquefaction (including Mobil-M gasoline synthesis); and coal gasification (low, medium and high Btu). The OTA Synfuels Advisory Board has been particularly helpful in providing for and reviewing information on these selected technologies, although by no means are they held accountable to or responsible for the study products.

The study effort built upon earlier work which attempted to the extent possible to standardize the engineering, planning, and estimating base of many processes. These efforts, as described in Chapters 2 through 4, were modified and extended to include additional concerns such as upgrading concerns and plant cost escalation concerns.

These standard or generic process units have been utilized, in conjunction with the assessment of site-specific planned/proposed synthetic fuel projects, to develop a set of alternate supply deployment scenarios. Two scenarios--a "business-as-usual" scenario, and an accelerated "pushing-the-limit"--have been developed in consultation with and direction from OTA staff.

Constraints and concerns affecting the scenario assessments have been discussed, as well as a discussion of the consequent labor needs. Supply site selection concerns, as well as end-use utilization concerns have also been identified.

As specified in the Introduction (Chapter 1), the study scope was confined to an assessment of the technical and economic comparisons of the selected synfuel technologies. On-line guidance and direction was provided by the OTA in making "mid-stream" technical and economic choices in the study effort. No assessment or interpretation of the policy implications was conducted as that was strictly considered outside of study scope, design, and

performance. Such policy concerns were reserved for the OTA, with its well-established and defined review procedures.

Study Findings

The study analysis investigated numerous technical and economic aspects of the selected synfuel technologies. Because of the very complex nature of this topic--as well as the need for cautious and critical qualification of the findings--each chapter attempts to summarize its findings in its own setting.

In brief, a snapshot of the study findings are as follows:

1. There is a fairly consistent relationship between the cost of the synthetic fuel product and the "quality specifications" of the product, as it is used in current end uses. Criteria used to measure product quality specifications include hydrogen content; octane number, aromaticity, lubricity, and a host of physical and chemical parameters (discussed in Chapters 4 and 5) that affect specific end use technology performance.

2. Although perhaps an oversimplification, there appears to be a high correlation, in a cost dimension, with the product "quality specificity" and the amount of hydrogen content and/or the average range of distillation of the product. Both coal and oil shale contain a lower fraction of hydrogen than petroleum. Natural gas and crude oil having the highest percent; oil shale next; and coal with the lowest fraction. Crude oil is a broad range material, with a broad range of quality, in this sense, as well. If we are to upgrade coal and oil shale to a series of products, of varying quality and specifications, comparable to the average yield of petroleum products, we can expect that, in addition to the greater extraction cost of coal and shale, there will be a greater reforming, processing or upgrading cost. This cost reflects the necessary changes to be made in physical, chemical, and material properties of the primary synfuels products to make them equivalent in use to existing refined products. Going beyond that, the cost is proportional to the specific product yield quality or quality mix that is pursued. For example, it is much cheaper to produce a Low-Meal Btu gas from coal than a High Btu gas. Similarly, it is more costly to produce a low boiling, high hydrogen containing

fuels such as motor gasoline than to produce a higher boiling, lower hydrogen containing fuel such as home heating type fuel oil products.

3. Specific process differences disappear to a large degree under our analysis, and the cost of synthetic product is more dependent upon its composition than upon the particular process used. On the other hand, certain processes (or process approaches) may be more selective for certain type products or product-slates and hence more efficient and economical routes to those specific products.

Our review and analysis of approaches to the process of upgrading raw (direct) liquid fuels to stable combustion fuels and subsequently refining them to transportation quality fuels shows us the following:

(a) At present, indirect liquefaction technologies such as Fischer-Tropsch are known technologies. As such, there is limited technical risk. At present, however, these processes are relatively expensive because of the chemical nature of breaking down hydrocarbons and later resynthesizing them. Most of the initial coal liquids projects will be indirect liquefaction processes.

(b) Certain resources favor certain product slates. Coal ravors the production of highly aromatic products, like high octane gasoline pool maphthas. Shale oil favors middle distillate products. Sour Crude contains many times the (high boiling) residual content as these resources and favors the production of boiler fuels, although it is certainly less expensive, at present, to produce gasoline and middle distillates from heavy and sour crudes than from coal or shale.

4. Cost Comparisons (in 1980 $)

(a) Fully (risk) discounted cost estimates of representative or generic coal-conversion processes vary from $10.00 to $16.00 per MMBTU of product.

(b) Future expectations of technology gains in the form of capital productivity may reduce these costs by over 30% (i.e., to about the $12.00 per MMBTU0.

(c) Upgraded costs add as much as $2.00-$2.50 per MMBTU (or $10.00-$15.00 per barrel) of product to the cost of oil shale liquids and-direct coal liquids.

(d) Refined transportation fuels are expected to have the following cost ranges:

(i) oil shale liquids - $60-70/barrel
(ii) indirect coal liquids - $70-80/barrel
(iii) direct coal liquids - $80-90/barrel

5. Transportation Concerns

(a) Transportation of synthetic liquids and gases are most likely to be transported by pipeline, with supplementary use of water borne carriers (where available), and unit tank train railcars.

(b) Patterns of synfuel plant and refinery siting are expected to be influenced by both resouce location as well as existing infrastructure (existing pipeline capacity; existing refinery capacity) .

6. Synfuel Deployment

(a) The development of reasonable scenarios of synfuel plant commercial deployment is extremely sensitive to the product role assigned to natural petroleum feedstocks, both domestic and imported.

(b) From the assessment of currently planned/ proposed commercial projects (described in Chapter 5), which provide the grassroot basis for our development of scenarios, we note that most commercial projects are directed toward the production of high grade fuels. Furthermore, due to the ever expanding cost of upgrading to meet increasingly stringent product user specifications, processes are being chosen to minimize these costs, and maximize high grade product yields. Oil shale, methanol, and Mobil-M gasoline are three examples of such product choices. A perceived outlook for natural crude supplies see higher volumes of lower grade crude oils available (sour crudes from Alaska and Saudi Arabia; heavy crudes with high viscosity from Venezuela and Bakersfield) . These crudes will require major refinery upgrading and consequent refinery investment, although this investment is considerably less than for synthetic fuels. Hence, redundant

investment in the synthetics area may occur if an integrated view is not taken. We believe that an integrated view will most likely be taken by companies engaged in regions considered, although these views may represent a regional and company specific optimization.

(c) Synfuel development will require the resolution of numerous technical, economic, and socio-economic concerns. Key among these concerns are a provision of materials, as well as engineering and skilled labor requirements. Drag lines, air compressors, and large diameter reactor vessels are examples of material needs. Chemical engineers availability is an example of the latter needs. It is felt, however, that these needs can be met, even in the high scenario, with the early development of programmatic plans. Similarly, early planning can relieve or avoid potential socioeconomic and community disruption.

TABLE OF CONTENTS

		Page
EXECUTIVE SUMMARY		1
TABLE OF CONTENTS		i
LIST OF FIGURES		iV
LIST OF TABLES		v
LIST OF EXHIBITS		viii
CHAPTER 1:	INTRODUCTION	1-0
	1.1 Role of Synthetic Fuels	1-1
	1.2 Scope of Study	1-2
CHAPTER 2:	BACKGROUND	2-o
	(I) Description of the Coal Conversion and Oil Shale Retorting Fuel Cycles	
	2.1 Overview of the Coal and Oil Shale Fuel Cycles	2-1
	2.2 Coal and Oil Shale Resources	2-1
	2.3 Exploration and Mining	2-6
	2.4 Beneficiation	2-9
	2.5 Transportation	2-1o
	2.6 Conversion	2-1o
	2.7 Upgrading and Refining	2-1o
	2.8 Distribution to End Users	2-13
	(II) Characteristic Synfuel Technologies Parameters	
	2.9 Common Elements	2-15
	2.10 Physical Size	2-15
	2.11 Complexity	2-15
	2.12 costs	2-17
	2.13 Conversion Efficiency	2-18
	2.14 Other Requirements and Concerns	2-18
CHAPTER 3:	OVERVIEW OF SELECTED SYNTHETIC FUEL CONVERSION PROCESSES	3-o
	3.1 General Synfuel Processes	3-1
	3.2 Coal Gasification	3-2
	3.3 Coal Liquefaction	3-8

Page

3.3.1 General 3-8
3.3.2 Liquid Solvent Refined Coal (SRCII) 3-11
3.3.3 Exxon Donor Solvent 3-14
3.3.4 H-Coal 3-17
3.3.5 Fischer-Tropsch Process . . . 3-21
3.3.6 Methanol Process 3-26

3.4 Oil Shale Retorting 3-31

3.4.1 General 3-31
3.4.2 Surface Retorting 3-31
3.4.3 Modified In Situ Retorting . 3-36

3.5 Comparison of the Various Synfuel Systems With Respect to Resource Requirements 3-40

CHAPTER 4: SYNTHETIC FUEL PROCESSES CONVERSION COST AND PRODUCT ECONOMICS 4-o

4.1 Conversion Costs and Product Economics 4-1

4.2 Scale of Production 4-7

4.3 product Quality 4-8

4.4 Estimating Methods 4-11

4.5 product Upgrading 4-22

4.6 Refining Synthetic Liquids 4-28

4.7 Transportation and Other Infrastructure Costs 4-36

4.8 Addendum to Chapter 4: Basis for Cost Assumptions 4-43

1. Basic Conversion Plant 4-43
2. Assumptions of Product Upgrading . . . 4-44
3. Refining Cost Assumptions . . 4-46

CHAPTER 5: SUPPLY DEPLOYMENT SCENARIOS FOR SYNTHETIC FUELS 5-o

5.1 Factors and Constraints Affecting Synfuel Development 5-1

5.2 Constraining Factors in the Transition period: 1980-2000 5-3

Page

5.2.1 Equipment Problems 5-4
5.2.2 Critical Materials 5-6
5.2.3 Manpower 5-6
5.2.4 Coal Supply. 5-9
5.2.5 Water Supply 5-13
5.2.6 Environmental Health and Safety 5-13
5.2.7 Siting 5-14
5.2.8 Transportation 5-15
5.2.9 Tradeoffs. 5-15

5.3 Development of Supply Deployment Scenario and Comparisons With Other Estimates 5-17

(A) Shale Oil Scenario 5-17
(B) Coal Gases Scenario. 5-23
(C) Coal Liquids 5-32
(D) Summary Tables and Comparisons 5-38

5.4 Labor Requirements Associated With the Scenarios 5-42

5.4.1 Operations Labor Needs 5-42
5.4.2 Construction Labor Needs . . . 5-44
5.4.3 Regional Deployment of Synthetic Fuel Plants Work Force. 5-49

5.5 Additional Concerns and Impacts: Product Acceptability Concerns. . . . 5-50

5.6 Foot notes to Chapter 5 5-53

APPENDICES

Appendix to Chapter 2: Typical Mining Characteristics. A-1

Appendix to Chapter 5:

(A) Status of Process Development A-1
(B) Existing U.S. and Foreign Low and Medium-Btu Gasification Systems . B-1
(C) U.S. DOE Cooperative Agreements and Feasibility Study Grants for Synfuels C-1

GLOSSARY G-1

BIBLIOGRAPHY B-1

LIST OF FIGURES

		Page
Figure 1.1:	U.S. Synthetic Fuels Production Goals 1985-2000.	1-3
Figure 2.1:	Coal Conversion System	2-2
Figure 2.2:	Oil Shale Retorting System	2-3
Figure 2.3:	Coal Fields of the conterminous~ United States.	2-4
Figure 2.4:	Oil Shale Deposits of the United States.	2-5
Figure 2.5:	Crude Oil Pipeline Network	2-14
Figure 3.1:	Basic Coal Gasification Processes. . .	3-4
Figure 3.2:	Schematic Diagram of Coal Gasification .	3-5
Figure 3.3:	Schematic Diagram of the Basic Liquefaction Processes	3-1o
Figure 3.4:	Schematic Diagram of the Solid Refined Coal (SRC-II) Process.	3-12
Figure 3.5:	Schematic Diagram of the Donor Solvent Liquefaction Process	3-16
Figure 3.6:	Schematic Diagram of the H-Coal Process.	3-20
Figure 3.7:	Fischer-Tropsch Synthesis.	3-25
Figure 3.8:	Synthesized Gasoline From Coal	3-27
Figure 3.9:	Mobil Catalytic Process.	3-28
Figure 3.10:	The TOSCO II Oil Shale Retorting System	3-32
Figure 3.11:	Modified In Situ Retorting	3-37
Figure 3.12:	Occidental Modified In Situ Retorting. .	3-38
Figure 5.1:	Comparison of Synthetic Fuel Production Estimates.	5-41

LIST OF TABLES

		Page
Table 2.1:	U.S. by States--Resources-Reserve Base-Production--Bituminous-Subbituminous-Lignite Coal.	2-7
Table 2.2 :	Potential Shale Oil in Place in the Oil Shale Deposits of the United States .	2-8
Table 2.3 :	Process Summary	2-19
Table 3.1:	Solvent Refined Coal II (SRC-II)	3-13
Table 3.2:	Typical Properties of SRC Fuels Using Recycle SRC Process	3-15
Table 3*3:	Donor Solvent Product Analysis.	3-18
Table 3.4:	Estimated Heat Balance for a Commercial-Scale EDS Plant	3-19
Table 3.5 :	Properties of H-Coal Distillates From Illinois No. 6 Coal Liquids	3-22
Table 3.6 :	H-Coal.	3-23
Table 3.7:	Overviews of SASOL I and SASOL 11	3-24
Table 3.8:	Thermal Efficiencies--Methanol-to-Gasoline --Fischer-Tropsch	3-29
Table 3.9:	Methanol-to-Gasoline Balances	3-30
Table 3 .10:	Basic Material Balance for a TOSCO II Retort Module	3-33
Table 3 .11:	Estimated Energy Balance for a TOSCO II Plant.	3-34
Table 3 .12:	TOSCO II Oil Shale Retorting.	3-35
Table 3 .13:	Modified In Situ Shale Retorting (Occidental).	3-39
Table 3 .14:	Resource Utilization Efficiencies of Synthetic Fuel Energy Systems	3-41
Table 3 .15:	Fossil Carbon Consumption of Synthetic Fuel Energy Systems	3-43

Page

Table 3.16 : Water Consumption of Synthetic Fuel Energy Systems. 3-44

Table 3.17 : Manpower Requirements of Synfuel Energy Systems. 3-46

Table 3.18: Annual Feedstock Requirements for Synthetic Fuel Energy Systems 3-48

Table 3.19 : Annual Water Consumption of Synthetic Fuel Energy Systems 3-49

Table 3.20: Annual Manpower Requirements of Synthetic Fuel Energy Systems " 3-50

Table 5.1: Potentially Commercial Scale Projects- Shale Oil .." 5-18

Table 5.2 : Shale Oil Build-up Scenarios" 5-20

Table 5.3: Shale Oil Deployment Scenarios (and Comparisons). 5-21

Table 5.4: Estimated Typical Shale Oil product Slate 1980-2000 (For Scenarios) 5-22

Table 5.5: Potential Commercial Scale Projects-- Low\Med Btu Gas 5-25

Table 5.6 : Potential Commercial Scale Projects-- H-Btu Gas 5-28

Table 5.7: Scenario Deployment: H-Btu and Med\Low Btu Gas 5-30

Table 5.8: Synthetic Coal Gases Comparison 5-31

Table 5.9: Potential Commercial Scale Projects-- Coal Liquids. 5-34

Table 5.10 : Coal Liquids Build-up Rate Scenario: Indirect and Direct . ..0. .*** . 5-35

Table 5.11: Coal Liquids Build-up Rate Scenarios. . . 5-36

Table 5.12: Coal Liquids Comparisons. 5-37

Table 5.13 : Summed Synthetic Fuel Deployment Schedules 5-39

Page

Table 5.14: Comparison of Synthetic Fuel Production Estimates 5-40

Table 5.15: Aggregate Operations Labor Needs. 5-43

Table 5.16: Direct Coal Liquids--Incremental Construction Labor Requirements for Plants Coming On-Line in Period Ending. . 5-45

Table 5.17: Indirect Coal Liquids--Incremental Construction Labor Requirements for Plants Coming On-Line in Period Ending. . 5-46

Table 5.18: Shale Oil--Incremental Construction Labor Requirements for Plants Coming On-Line in Period Ending. 5-47

Table 5.19: Coal Gases--Incremental Construction Labor Requirements for Plants Coming On-Line in Period Ending. 5-48

Table 5.20: Regional Share of Incremental Construction Work Force for Plants Coming On-Line in Period Ending 5-49

LIST OF EXHIBITS

		Page
Exhibit 4-1:	Plant Capital Requirements	4-3
Exhibit 4-2:	Total Conversion Plant Investment	4-4
Exhibit 4-3:	Cost Data--Operating and Maintenance cost	4-5
Exhibit 4-4:	Annual Operating Cost	4-6
Exhibit 4-5:	Synthetic Plant Product Yields	4-1o
Exhibit 4-6:	Synthetic Fuel Production Costs Original Estimates - Raw Liquids	4-12
Exhibit 4-7:	Cost Growth in Pioneer Energy Process Plants	4-14
Exhibit 4-8:	History of Shale Oil Capital Cost Estimates	4-15
Exhibit 4-9:	Synthetic Fuels Production Costs, Factored Cost Estimates, Raw Liquids	4-17
Exhibit 4-lo:	Best Available Estimates - Typical Synfuel Processes	4-18
Exhibit 4-11:	Synthetic Fuels production Costs Factored Cost Estimates, Raw Liquids, Best Estimates	4-21
Exhibit 4-12:	Simplified Flow Diagram of Chevron First State Hydrotreater Refining of SRC-II Oil	4-23
Exhibit 4-13:	Direct Liquids Upgrading Costs	4-25
Exhibit 4-14:	Direct Liquids Upgraded Costs/Barrel	4-27
Exhibit 4-15:	Synthetic Fuels Production costs, Best Available Estimates, Upgraded Liquids	4-29
Exhibit 4-16:	Process and Slate	4-31
Exhibit 4-17:	Synthetic Fuels Production Costs, Best Available Cost Estimates - Refined Liquid Fuels	4-33

Page

Exhibit 4-18: Direct Liquids (SRC-II) Refining 4-34

Exhibit 4-19: SRC II Refined To Product Costs 4-35

Exhibit 4-20: Synthetic Fuel Liquids 4-37

Exhibit 4-21: Schematic Flow Diagram--Refining of SRC-II Oil by Hydrotreating and Hydrocracking--Case I 4-38

Exhibit 4-22: Schematic Flow Diagram--Refining of SRC-II Oil by High Severity Hydrotreating--Case II 4-39

Exhibit 4-23: Simplified Flow Diagram--Refining of SRC-II Oil by Moderate Severity Hydrotreating--Case III 4-40

Exhibit 5.1: Potentially Critical Materials and Equipment Requirements for Coal Liquids Plants and Associated Mines. . . 5-7

Exhibit 5.2: Selected Material and Equipment Items Required 5-8

Exhibit 5.3: Total Engineering Manpower Requirements for Coal Liquids Plants and Associated Mines 5-10

Exhibit 5.4: Projected Peak Construction Labor Requirements 5-11

Exhibit 5.5: Regional Manual Labor for Construction and Maintenance for Coal Liquids Plants and Associated Mines 5-12

Exhibit 5.6: Tradeoffs in Shale Development 5-16

CHAPTER 1: INTRODUCTION

Section No.		Page
1.1	Role of Synthetic Fuels	1-1
1.2	Scope of Study.	1-2

CHAPTER 1: INTRODUCTION

1.1 Role of Synthetic Fuels

Energy consumption in the U.S. has become increasingly dependent upon foreign sources, especially in the liquid fuels area. Transportation energy usage is a dominant user of foreign petroleum. Motor gasoline alone accounts for over 35% of all petroleum products consumed in the Us. (Reference No. 1) ; petroleum itself accounting for over 43% of all the energy consumed in the U.S. (Reference No. 2).

Unfortunately, over the past 35 years, the ratio of U.S. oil reserves to total U.S. oil consumption has declined, even with Alaskan North Slope oil discoveries. On the other hand, oil imports have been increasingly filling the gap in petroleum supply-demand imbalances. From 1950 to 1977, domestic petroleum production fell from an average 85% of total domestic petroleum consumption to 47% in 1977 (Reference No. 3)* This trend has been somewhat slowed down recently by increased energy conservation measures--especially in the transportation sector--but it has not stopped. The impacts of this increasing dependence on foreign crude oil and refined products have been staggering. In addition to the increased and continual exposure to supply interruptions, and subsequent national security vulnerability, the direct costs of these imports have increased enormously (Reference No. 4). From a modest plateu of 1-2 billion/year in the 1958-68 time period, the direct costs have mushroomed to 25 billion in the embargo period (1973-74) , and are heading for 90-100 billion in 1980 (Reference No. 5). The impacts of this capital drain in domestic investments, subsequent jobs, and consumer inflation has been notable. In the third quarter of 1979 alone, domestic prices for energy, housing; food, and medical care rose at an annual 17.6% rate--with energy prices escalating at a 50.1% annual rate. Adverse impacts have not been confined to the U.S. domestic economy. Oil bills, being raised by OPEC faster than inflation--not only account for 25-50% of total inflation rates around the world, but also pose a global inflationary problem, apparently without end--unless alternate or substitute fuel supplies are found\developed in sufficient quantities and at competitive prices to put the lid on world crude price escalation in a timely fashion.

Alternate Synthetic Fuels

Many recent studies (Reference No. 6) have estimated the domestic energy and petroleum supply-demand imbalances. Most have credited conservation with decreasing petroleum demand from its historical rates of growth, and most have nonetheless projected a need for alternate domestic liquid fuels to fill the increasing domestic petroleum supply-demand imbalances.

Although most studies have agreed on the need for/and future role-of alternate domestic-fuels, they have differed in projecting their rate of growth in the marketplace, date of introduction, prospective cost, ease of usage, and "raw" resource availability--as well as their potential environmental, health, and safety impacts. The U.S. Department of Energy has recently targeted synthetic production goals to reach 5 million barrels/day of crude oil equivalent from all synthetic sources by the year 2000 (Figure 1.1), and the recently passed Energy Security Act (6/30/80) has targeted goals of .5 MMBD by 1987 and 2.0 MMBD by 2000. Although current forecasts vary, synthetics have generally been forecast to provide between 12-13% of total domestic energy by the year 2000, and even up to 30% of primary liquid fuel supplies. Although composition of those synthetic fuel targets and projections are varied (shale, unconventional gas, biomass, solar, . ..) , coal--as both a feedstock for synthetic fuels and as a direct combustion boiler fuel--generally has been projected to play a large and growing role. In many ways, this is a natural reflection of the abundant and regionally diverse U.S. coal resources and reserves. This is similarly true for shale as described in Chapter 2.

1.2 Scope of Study

The study design of this effort is, in a broad fashion, to provide for a technical and economic comparison of various selected synfuel technologies. As outlined in the contract study Scope of Work, the study team was directed to use existing published (and referenced) information and data. OTA staff and the Synfuels Advisory Group assisted in the acquisition of published data, as well as providing guidance and review. The study team was further directed to look solely at technical and economic aspects of selected synfuel technologies and specifically not at policy implications, interpretations, and concerns. These very

FIGURE 1.1:

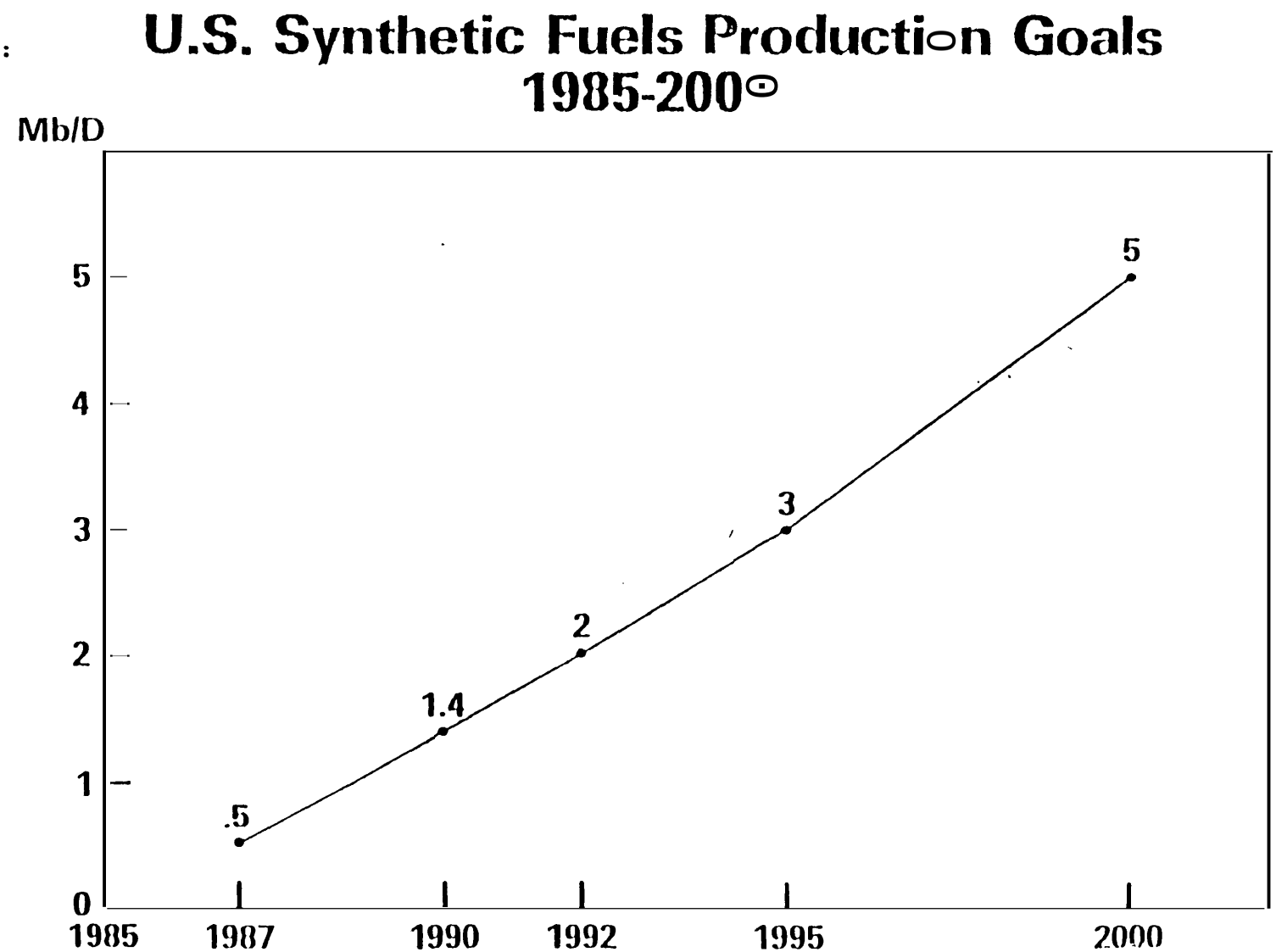

Source: DoE, 1980

ejb&a

real policy considerations are the stated prerogative of the OTA itself and its existing well-defined review procedures.

In consultation with the OTA staff, generic technology choices have been made (Chapters 3 and 4), and supply deployment scenarios developed (Chapter 5). Each chapter, and sub-section, specifically identifies the respective referenced sources and assumptions used. Where available in the literature, comparative estimates have been provided. Scope, timing, and budget greatly limited the degree of first-hand data verification. The recent ESCOE coal conversion study, as referenced in Chapter 4, was the scope directed starting point for the comparative economic analysis, with specific cost basis and assumptions provided in the addendum to Chapter 4.

The outline of the report is as follows:

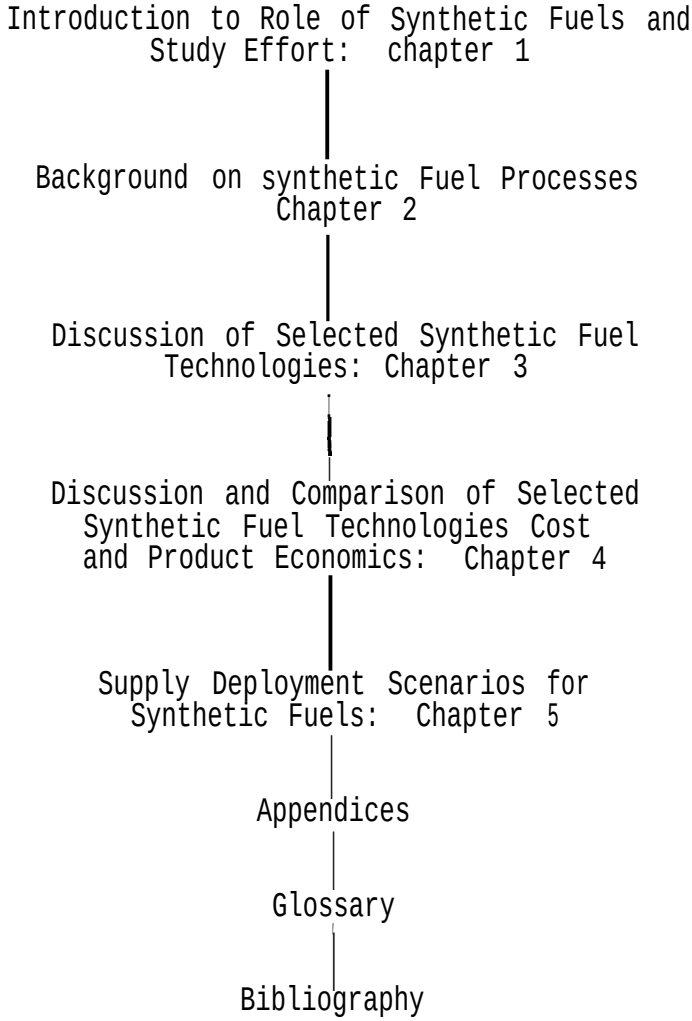

Potential Next Steps

Potential next steps to the broad-based study effort could include site-specific, technology-specific detailed technical, economic, and socioeconomic evaluations. Site-specific supply transportation and product distribution needs and costs; assessments of facility-specific integration of synfuel facilities with existing refinery capacity; and site and region-specific socioeconomic and labor/skill mix needs. Case study assessment are sub-examples.

On the policy side, the OTA using this study, as well as other component study efforts, will be developing policy interpretations.

CHAPTER 2: BACKGROUND

Section No.		Page
	(I) Dascription of the Coal Conversion and Oil Shale Retorting Fuel Cycles	
2.1	Overview of the Coal and Oil Shale *Fuel* cycles	2-1
2.2	Coal and Oil Shale Resources	2-1
2.3	Expiration and Mining	2-6
2.4	Beneficiation	2-9
2.5	Transportation	2-1o
2.6	Conversion	2-1o
2.7	Upgrading and Refining	2-U
2.8	Distribution to End Users	2-14
	(II) Characteristic Synfuel Technologies Parroters	
2.9	Coammon Elements	2-14
2.10	Physical Size	2-14
2.11	Complexity	2-16
2.12	costs	2-17
2.13	Conversion Efficiency	2-8
2.14	Other Requirements and Concerns	2-19

Chapter 2: BACKGROUND

(I) Description of the coal Conversion and Oil Shale Retorting Fuel Cycles

2.1 Overview of the Coal and Oil Shale Fuel Cycles

In order to estimate investments from mine to end user (excluding automobiles) , or to assess the rates of potential development of the synthetic fuels industry, it is necessary to consider all phases of the fuel cycles involved in the development. They include exploration for the resources, their mining, local transportation, beneficiation, transportation to conversion plants, conversion of the energy resources to fuels, and finally, their distribution to end users. Figures 2.1 and 2.2 (modified from Reference No. 7) describe in a schematic manner the energy systems involved in the case of coal conversion and of oil shale retorting.

2.2 Coal and Oil Shale Resources

Coal and oil shale resources are defined as those deposits "that can be extracted and processed to yield products that can be marketed at a profit" (Reference No. 8). Estimates of resources are not limited by whether or not the deposits have been demonstrated, or whether they are extractable by existing technologies at competitive economic costs. If the resource has been demonstrated (i.e. its location, quality, and quantity have been determined by evidence supported by measuements) and its extraction is economically feasible, then it is classified as a reserve. Resources may become reserves as a result of changes in technical or economic development. The major coal and oil shale resources of the coterminous United States are shown in Figure 2.3 (Reference No. 9) and 2.4 (Reference No. 8) . The United States reserves and resources of coal are estimated as 178 and 1,285 billion metric tons (Reference No. 10) . Other estimates vary widely, depending on economic and technical assumptions. For example a recent estimate of recoverable reserves of coal (Reference No. 11) places them at 38,000 quads[2] or equivalent to 150 billion metric tons of coal.

---

[1] A recoverability factor of 50 percent is assumed for resources.

[2] Quad is a unit of energy equivalent to 10^{15} (quadrillion) Btu. It is approximately equivalent to 180 million barrels of oil or to 40 million metric tons of bitumious coal. On the average, one quad is enough to supply all the present energy requirements of about 3 million Americans for one year.

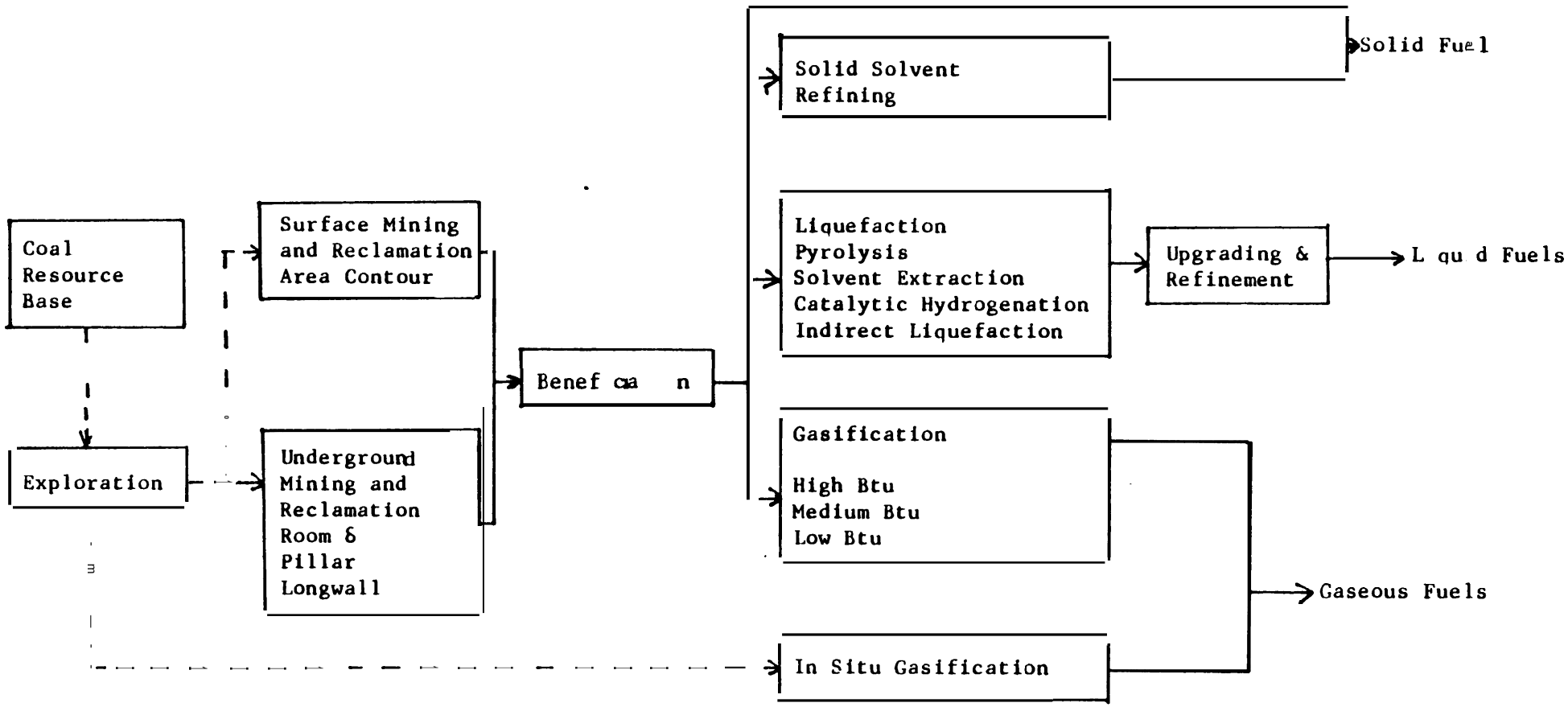

SOURCE: E. J. Bentz & Associates

FIGURE 2.1 Coal Conversion System

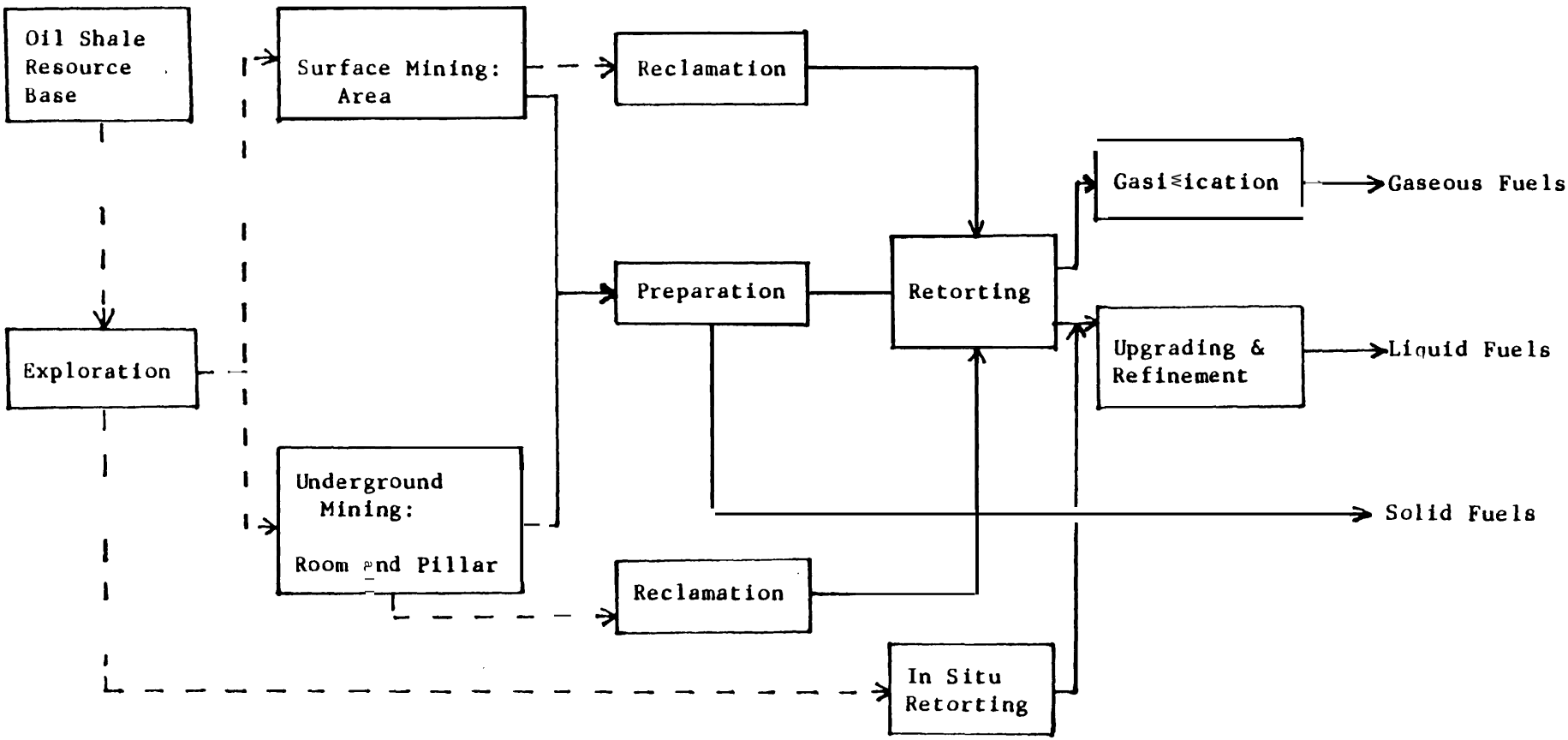

SOURCE: E. J. Bentz & Associates

FIGURE 2.2: Oil Shale Retorting System

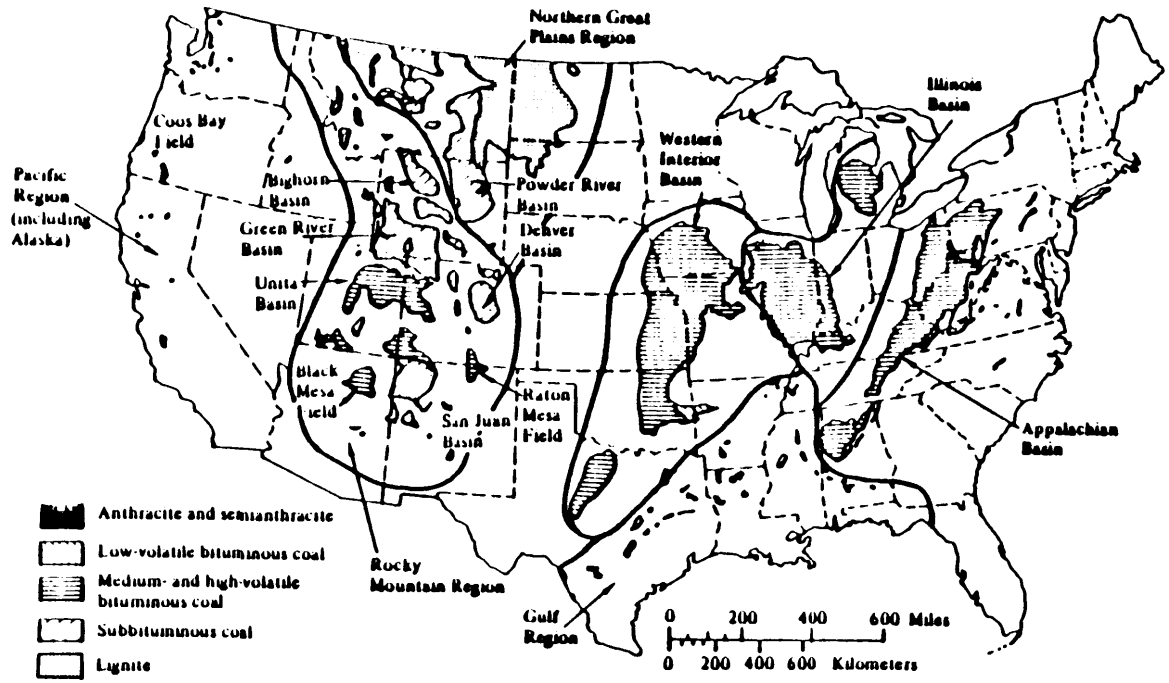

FIGURE 2.3 Coal fields of the coterminous United States. Source: Adapted from Paul Averitt, *Coal Resources of the United States, January 1, 1974*, U.S. Department of the Interior, Geological Survey Bulletin 1412 (Washington, D.C.: U.S. Government Printing Office (Stock No. 024-001-02703), 1975), p. 5; and U.S. Department of Energy, Energy Information Administration, *Coal Data* (Washington, D.C.: U.S. Government Printing Office (DOE/EIA-0064), 1978), p. 1.

Figuro24: Oil Shale Deposits of the United States

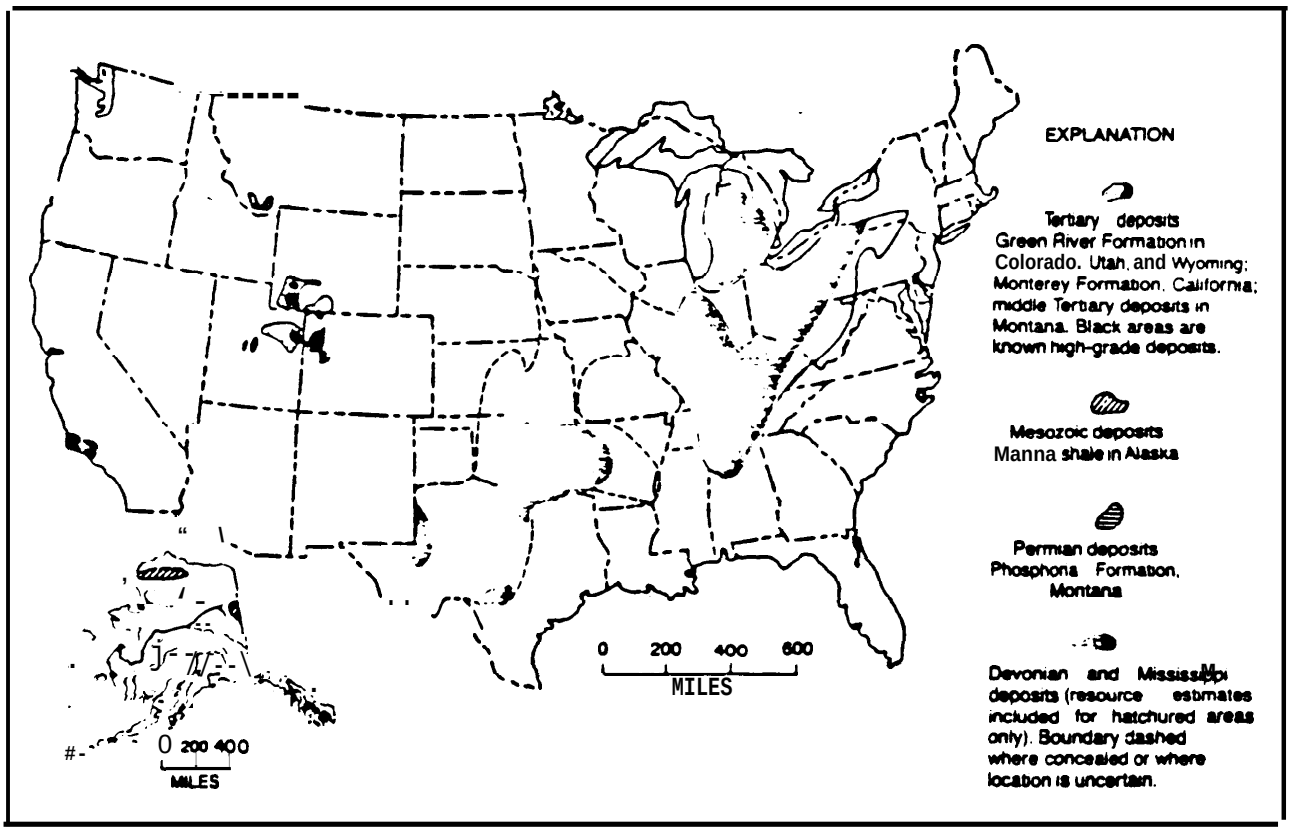

SOURCE D C Duncan and V E. Swanson, *Organic-Rich Shales of the United* States ● nd *World Land Areas*, U.S Geological Survey Circular S23. 1965.

e j b &a

Estimates of recoverable reserves and resources of oil shale vary even more broadly than those of coal because of the poor existing state of knowledge. An estimate by the Committee on Nuclear and Alternative Energy Systems of the National Academy of Sciences places them at 3660 quads of recoverable oil at $21.50 -$27.50 in 1978 dollars (Reference No. 9) which is equivalent to about 1.50 billion metric tons of real. **Schurr's estimates** of shale oil reserves are only 1100 quads which is equivalent to 44 billion metric tons of coal (Reference No. 11) . Oil shale resources have been estimated by OTA (1980) as equivalent to between 2,000 and 140,000 billion barrels of oil equivalent, or 440 to 3,090 billion tons of Coal.

The distribution of the coal and oil shale resources are given in Tables 2.1 (Reference No. 12) and 2.2 (Reference *No. 8) . There are large* variations among the characteristics of coal and oil shale resources, as we11 as the characteristics of sites at which they are found. These characteristics affect the processes, economic rests and resource requirements of the development of a synthetic *fuels industry. The important variables are the quantity* and quality of the coal and oil shale in each site or province, ownership, relationships to markets and processing facilities, bed depth, seam thickness, availability of water resources, and competition for surface area usage. These are discussed at greater length in Appendices A and B (Reference No. 7) .

2.3 Exploration and Mining

Knowledge about coal and oil shale resources is usually obtained in stages. The steps begin with the assessment of geological and geophysical data and are followed by surface and areal photographic surveys and magnetic measurements. Finally, mapping and appraisal of regional deposits are done, based on seismic surveys and drilling. The steps are exp1ained in greater detail in references below.

There are two basic methods of coal and oil shale mining, namely surface mining and underground mining. The choice between them depends mainly on the depth of burial and thickness of the seam. In the case of coal seams that are relatively close to the surface (i.e. less than 180 feet) surface mining is employed (Reference No. 13) . In the case of oil shale, where the deposit is within a few hundred feet (200 to 300 feet) from the surface, it can be surface mined (Reference No. 14) . However, higher quality oil shale is commonly located at depths of over 600 feet, so that it may be more efficient to apply underground processes of retorting rather than mine the shale (Reference No. 8) .

A qualitative description of the mining methods and their impact are given references 7 and 8. Appendix A to Chapter 2 summarizes the the major components, resource requirements, costs and pollutants

TABLE 2.1

U.S. BY STATES
RESOURCES-RESERVE BASE-PRODUCTION
BITUMINOUS-SUBBITUMINOUS-LIGNITE COAL

(Millions of Tons)

State	USGS Remaining Identified Resources January 1, 1974	Yearly Production 1977	Estimated Remaining Reserve Base January 1, 1978
Alabama	15,262	21	1,823
Alaska	130,079	<1	11,642
Arizona	21,234	11	308
Arkansas	4,938	<1	668
Colorado	148,850	12	14,815
Georgia	1+	<1	1+
Illinois	146,001	54	65,286
Indiana	32,868	28	10,495
Iowa	6,505	<l	2,882
Kansas	18,668	<1	1,385
East Kentucky	22,226	92	12,360
West Kentucky	36,120	51	35,788
Louisiana	1,000	0	800
Maryland	1,152	3	1,027
Michigan	205	0	118
Missouri	31,184	7	9,457
Montana	291,639	29	108,282
New Mexico	61,387	11	4,344
North Carolina	110	0	32
North Dakota	350,602	12	15,954
Ohio	41,116	46	20,736
Oklahoma	7,117	5	1,276
Oregon	334	0	57
Pennsylvania	63,940	83	23,335
South Dakota	2,185	0	428
Tennessee	2,530	10	932
Texas	139,000	17	3,210
Utah	23,359	9	3,982
Virginia	9,216	38	29,225
Washington	6,194	5	1,932
West Virginia	100,150	95	38,822
Wyoming	136,891	44	53,182
Other States (Calif., Idaho, Nebr., Nevada)	688	0	447

Table From: Solid Fuels for U.S. Industry, Cameron Engineers, 1979

ejb &a

TABLE 2.2

POTENTIAL SHALE OIL IN PLACE IN THE OIL SHALE DEPOSITS OF THE UNITED STATES (billions of barrels)

Location	Range of shale oil yields, gallons per ton		
	5 - 10[a]	10 - 25	25 - 100[a]
Colorado, Utah, and Wyoming (the Green River formation)	4,000	2,800	1,200
Central and Eastern States (includes Antrim, Chattanooga, Devonian, and other shales)	2,000	1,000	(?)
Alaska	Large	200	250
Other deposits	134,000	22,500	(?)
Total	140,000+	26,000	2,000(?)

[a]Order of magnitude estimate includes known deposits, extrapolation and interpolation of known deposits, and anticipated deposits.

Data from: D.C. Duncan and V.E. Swanson, Organic-Rich Shales of the United States and World Land Areas, U.S. Geological Survey Circular 523, 1965.

ejb&a

associated with generic surface and underground coal and oil shale mining in East and West.

The following conclusions can be drawn about coal and oil shale, namely:

1. The Northern Great Plains and Rocky Mountain Provinces contain approximately 70 percent of the coal resources in the United States and most of the nations low-sulfur coal (References No. 7 and 14a) .

2. Much of the coal likely to be developed in the near future can be surface mined. This estimate is based on existing trends of continued shift from underground to surface mined coal (References No. 1& and 14c) , and on the abundant quantities of coal that can be mined by existing surface mining technologies (References 7 and 14a) .

3. Competition for surface area usage is relatively low in those areas of coal mining (Reference No. 7) .

4. The federal government controls the majority of the coal and oil shale lands (References No. 7, 8, and 14a) .

5. Water resources can become a constraint on coal development in the Rocky Mountain and Northern Great Plains Provinces (References No. 7, 9, and 14d) .

6. The development of oil from oil shale resources involves tremendous quantities of materials that need to be mined and disposed. The production of 1 million bbl oil per day from oil shale would require the mining and disposal of about 1.3 million metric tons of shale per day (Refer-e No. 15) .

7. Most oil shale extraction is expected to be by underground mining, with only about 1.5 to 20 percent being extractable by surface methods (Reference No. 16) . This proportion may change with technological developments.

2.4 Beneficiation

Coal and oil shale feedstocks require some preparation, called beneficiation,prior to their feeding into the conversion process.

The nature of the preparation depends on the characteristics of the feedstocks, and on the type of conversion process adopted. In some cases, mechanical upgrading is sufficient, and consists of any or all of the following processes:

1. Crushing and screening
2. Cleaning
3. Drying

In some cases of coal feedstocks, further processing is required. A portion of the ash and sulfur can be removed from the coal by simple procedures such as water washing, or magnetic separation of iron pyrites. Further upgrading of the coal can involve chemical processes, such as reacting the coal with various chemicals, or converting it to more desirable products. A further discussion of coal beneficiation is included in Reference No. 7 and Reference No. 13.

Appendix Table 8 (Reference No. 17), summarizes the major components and resource requirements of coal beneficiation. Appendix A to Chapter 2 compares the costs of various chemical coal cleaning processes.

Oil shale beneficiation consists mainly of crushing and sizing. The process is further discussed in Reference No. 8.

2.5 Transportation

Local transportation is mainly limited to the transfer of the coal or Shale between different parts of the mining area. Truck, belt conveyor, or rail transport are the most used means.

Coal also needs to be transported beneficiation plants, and in large quantities and over large distances to coal conversion plants. There are a number of alternatives for transporting the coal, namely, railroads (both unit and conventional trains), slurry pipelines, and to a lesser extent, barges and trucks. The transportation of coal is further discussed in Reference 7. Appendix to Chapter 2, References 7 and 18, summarize the major components and resource requirements of transportation.

In the case of oil shale, siting of the conversion plan is near the mining area is envisaged. This is because of the tremendous quantities of shale involved.

2.6 Conversion

The Conversion of coal and oil shale to other energy products is

covered in detail in Chapter 3 of this report.

2.7 Upgrading and Refining

Raw synfuels may be used directly in the market for some applications without further upgrading; or they may require modifications before they can become substitutes for existing products. The need for different variations of upgrading will be detemined by the characteristics of the synfuels, and their uses. Liquid synfuels can be utilized in many end uses, the most important of which are the transportation, space heating, raising of steam in boilers and as chemical feedstocks. Substitution of coal or oil shale derived liquids for petroleum based fuels particularly in transportation, will create problems because of the differences between them. They differ mainly in the types and quantities of hydrocarbon species involved in the overall ratio of hydrogen to carbon atoms in the mixture, and to a lesser extent, an increased presence of ash, trace metals, and nitrogen compounds.[3] While the ratio of hydrogen to carbon is approximately 2 for petroleum, it drops in general to 1.9 for shale oil and in general 0.75 for coal derived liquids (Reference No. 19) , although this depends on the specific product slate and operating conditions. The addition of substantial amounts of coal or shale derived fuels will mainly decease the hydrogen to carbon ratio, and increase the aromatic, nitrogen, and trace metal content of the refinery products.

The concerns and costs associated with selective upgrading are discussed in Chapter 4. The key concern is to match anticipated product demand slate specifications and tolerances with variable feedstock inputs (from West Texas crude to shale oil) at least cost. The factors that affect the cost are the kind of strategies that have to be developed to meet the challenge, and the decision whether to upgrade the synfuel at the conversion plant or at the refinery.

There are several strategies that can be used to adopt synfuels to product demand. One is to modify the engines using at present petroleum derived fuels to match the characteristics of synthetic fuels; another is to modify the synthetic fuels; a third is to develop an optimum combination of changes in both the supply and end use sections. Still, it should be pointed out, that many variations of upgrading can be conceived, not necessarily requiring conversion of the total raw synfuel streams to refined products Rather, some Synergistic effects can be used to incorporate synfuels upgrading into a variety of refining schemes, with significant improvement in *economics .*

---

[3] Raw *coal distillates* contains 100 *times* the nitrogen of conventional petroleum (Reference No. 19) .

Early analysis (Reference No. 19) suggested that in the short run, selective synthetic fuel upgrading can alleviate fuel distribution concerns. More recent analyses (Reference No. 20) suggest that transition solutions will probably entail synthetic fuel finished products – such as methanol in modified automotive fleet engines. These matching concerns reflect the sensitivity of combustion engines to the hydrocarbon makeup of the fuel. Experience has * that the combustion of fuels low in hydrogen content and rich in aromatics results in an increased formation of soot, in addition to various other in-field maintenance problems.

Existing and anticipated petroleum refining technology can upgrade synthetic oils to meet current engine and turbine specification. This is primarily done by the hydrogeneration of crudes. For most existing refineries, the development of such upgrading capabilities would require costly changes in the reactor vessels to withstand high pressures, and a further supply of hydrogen. Therefore, an economic evaluation needs to be carried out for each specific situation. It would determine whether product upgrading is more cost effective when conducted together with the primary coal hydroliquefaction step, thus forcing the conversion process to produce finished, more premium hydrocarbon liquids; or whether upgrading should be combined with refining.

Oil from shale with hydrogen to carbon ratio of 1.9 (vs 2 for petroleum) can be substituted for present fuels with some relative ease. Oil from coal conversion with hydrogen to carbon ratio of 0.75 requires more upgrading.

Preliminary studies indicate that the upgrading of the H/C ratio and reducing the aromatic and organic nitrogen contents of synthetic crudes is feasible but expensive in terms of costs and energy losses. chapter 4 discusses these cost comparisons[4]. Various estimates have been prepared for upgrading. Among them are references for coal conversion and shale . Estimates have been prepared by Chevron, U.S.A.

---

4 - uncertain still. surrounds the costs of alternate fuels for heat engines since absolute costs will not be established until fuel production plants are built and operated. However, for the purpose of initial screening of alternate fuels, relative rests can be established from published studies . Comparing these studies on a consistent basis in terms of total delivered costs and engine efficiencies is more important than the assesment of absolute product costs shown by such studies.

5 Other authors (Reference Nos. 21, 22, 23, 24 and 25) indicate and describe processes for upgrading shale oil but no comparable cost and energy estimates are given.

putting the cost of upgrading crude shale oil for a 100,000 bbl/d facility at $6.50, in first quarter 1978 dollars, equivalent to about $7.80 in 1980 dollars (Reference No. 8) . Total cost of upgrading and refining crude synthetic fuels vary according to the capacity and location of the refinery, the nature of the crudes involved and the available facilities and options at the refinery. Estimates of the refining costs for crude shale oil ranged from $8.00 to $12. 00/bbl (Reference No. 8) . In the case of refineries modified for crude shale oil, estimates as low as $0.25 to $2. 00/bbl are reported (Reference No. 8) . Upgrading of these crudes may also result in energy losses as large as 25 to 50 percent of the original energy in the coal (Reference No. 19) .

There are several studies underway to define capabilities of state-of-the-art petroleum refineries for syncrude upgrading and development of new refining methods specifically tailored towards syncrudes (Reference Nos. 22, 23, 26, 24 and 21) . The preliminary conclusions that can be drawn are:

1. Syncrudes can be refined by conventional methods.

2. Products are interchangeable with petroleum derived products.

3. There are serious economic and energy penalties in upgrading (Reference No. l9) , but research leading to improved refining processes to @@- the syncrudes and enqine development to use then are expected to reduce the penalties.

4. Direct coal liquids may require more severe upgrading than shale oil (Reference No. 19) .

The processing details of upgrading of various coal conversion and oil shale derived crudes as well as their properti"es relative to petroleum males are given in references 22, 23, 26a and 26b.

Crude synthetic fuels can be upgraded either at the synfuel plant or at a refinery[6]. The upgrading process is similar in many respects to the refining of crude petroleun. Therefore, there may be economic and technical incentives to combine the two operations in one plant. Utilization of existing facilities, and the available options of existing refineries to mix syncrudes and petroleum crudes to ease the upgrading process are other advantages. Furthermore, upgrading requires water, so that the location of many potential synfuel conversion plants in dry areas may dictate the separation of the two. However,

---

6 Most existing refineries will need to be modified before they can handle syncrudes.

a decision on whether to upgrade synfuels at the conversion plant or in the refinery should be based on a detailed analysis with consideration given to location and marketing factors.

2.8 Distribution to End Users

There is similarity between syncrudes and petroleum crude oil. It is therefore most likely that the mode of distribution will. be through the presently existing crude oil pipelines shown in Figure 2.5 (Reference No. 27) . Some new pipeline additions or extensions will undoubtedly be built, depending on the location of the syncrude plants However, it is likely that the location of crude oil pipelines, as well as the availability of coal, water, etc. , will be taken into account in siting the plants. Once the syncrude has entered the pipeline distribution system, it will probably be treated as another source of crude, as is presently done with syncrude from Canadian tar sands, and districted to refineries as a supplement to natural crude supplies (Reference No. 27) .

(I I) Synfuel Technologies Parameters

2.9 Common Elements

There are about one hundred different processes for converting coal or oil shale to gaseous, liquid or solid fuels. Still there are important similarities among then. They relate to the physical size of the plants, their complexity costs, conversion efficiencies, and the requirements for resources such as manpower, feedstocks, land, water, and equipment. These factors are important for the understanding of the various conversion processes; the situation of constraints and time tables of implementation; and for understanding the uncertainties involved in projections.

2.10 Physical. Size

Larger sizes of synfuel plants do not cost propotionately more than smaller sizes. As a result there is an incentive to minimize costs by designing large capacity plants of the order of 50,000 to 100,000 barrels per day oil equivalent production. Such large plants can provide the equivalent energy requirements of a city of about a quarter to half a million people. The investment required for a 50,000 barrels per day synfuel plant is estimated between $2 and $4 billion (Reference No. 28) . The constuction of the plant will be a major engineering endeavor and require about five to eight years. The size of the plant is measured in square miles[7]. The amounts of material that have to be handled by

---

7 Two squares miles of land are required for a 125 million CFD gasification plant producing the equivalent of 22,000 barrels of oil per day (Reference No. 28) .

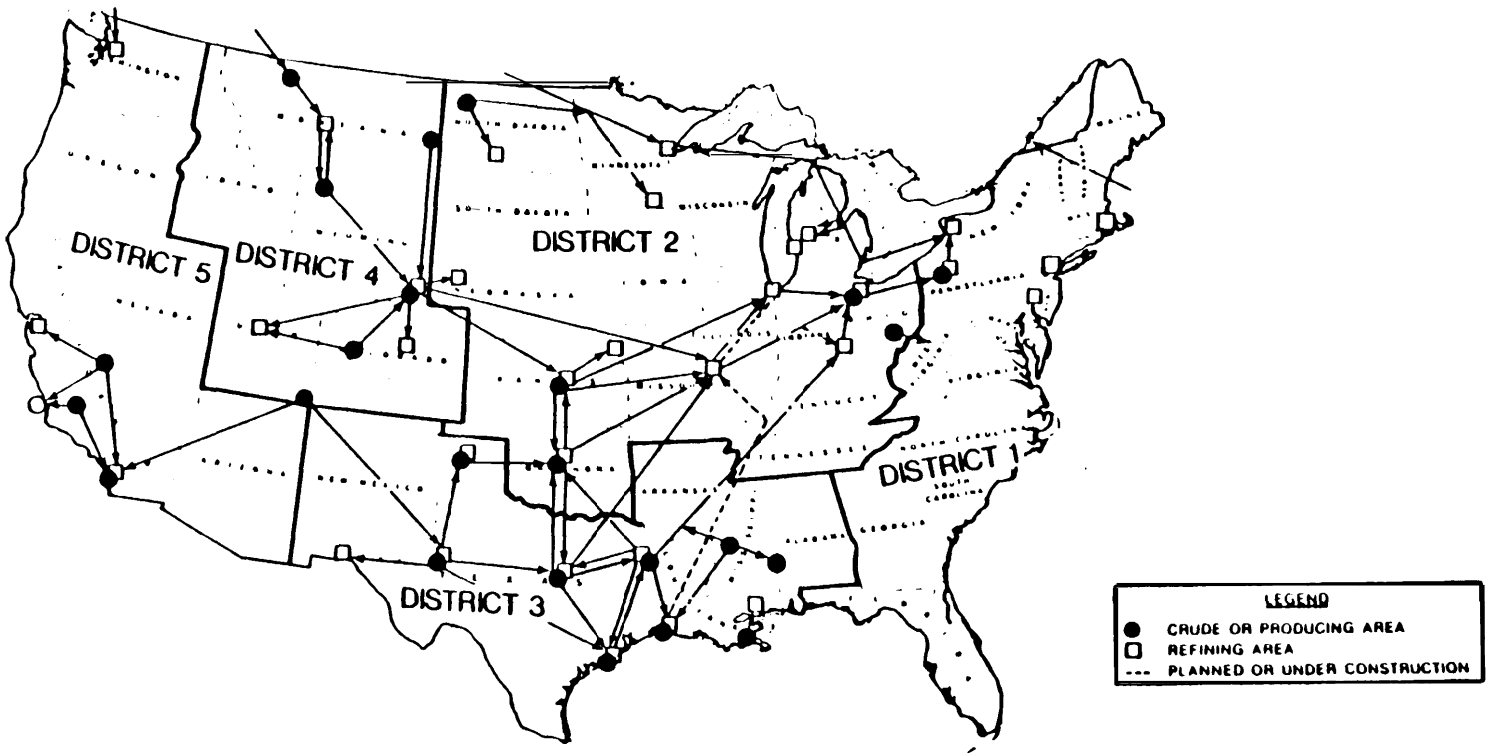

SOURCE: IONAL PETROLEUM COUNCIL

FIGURE 2.5: CRUDE OIL PIPELINE NETWORK

the conversion plants are also very large. In the case of a 50,000 barrel per day SRC II coal liquefaction plant, coal feed is estimated at 32,000 tons per day and solid wastes at 36,000 tons per day on a dry basis (Reference No. 25) . This is equivalent to one railroad car every three minutes . In the case of a similar capacity oil shale retorting plant, the quantities are double those for the coal liquefaction plant (Reference No. 28) .

2.11 Complexity

All of the synfuel processes reviewed in this paper have varying degrees of overall complexity[8] (Reference NOS. 28, 29, and 30) . This is because many individual steps are required. However, although some complexity is unavoidable, redundant complexity is costly in terms of such factors as investment and operation costs, efficiency, lag time between initiation and finalization of projects, and reliability of operation. Rogers (1979) divided complexity into the following categories, which can apply to all coal and oil shale conversion processes, and comments on their implications:

- "Reaction complexity. A process which requires several consecutive reactions is less desirable than a process involving fewer reactions . The sensitivity of any one reaction to changes in any of the important variables, such as temperature, concentration, etc., may have strong effect on quality control and reliability. Coal is a heterogenous material and imposition from a given mine often varies with time. This further aggravates the reaction problem.

- Operational complexity. A process with many steps which entails multiple handling of solids and fluid streams will be prone to more equipment failures and consequently greater downtime . As detailed in the section on reactor complexity, the methods used for gas/solid contacting and catalytic conversion can also greatly increase process complexity. As a general rule, solids cause more problems than fluids, and liquids are more troublesome than gases.

- Operating regime. The chemistry of coal conversion processes normally involves high operating temperatures and pressures. Very high pressures or temperatures involve more difficulties. Special materials and equipment such as high pressure solids feeders and non-standard items must be built and maintained

---

8 Shale oil retorting and upgrading systems may not be as complex as some coal. conversion systems.

with much higher standards than required for simpler conditions.

. Auxiliary facilities. The number of *required support* facilities such as catalyst reclaiming, by-product recovery plants and special utility services will make the process complex. Each auxiliary service brinqs with it its own complexity factor with an influence on cost and reliability."

Comprehensive tables comparing the process complexity of various coal conversion processes have been published (Reference No. 29) . It should be noted that many of the coal conversion and oil shale retorting processes share many common unit operations. These include such steps as grinding, drying, preheating, reaction, ash separation, flashing, hydrotreating, distillation, storage, and many auxiliary operations such as hydrogen generation, removal of sulfur and nitrogen compounds, waste processing, electric power production and plant maintenance. Many of these unit operations are familiar and can be designed with confidence. There are, however, a few steps which are either difficult or impossible to accomplish with known technology. They are the ones that add Uncertainty to synfuel technology with respect to costs and time tables.

2.12 costs

Synfuel plants are capital intensive. As discussed in Chapter 4, capital cost ranged significantly as a function of product cost over the technologies. This makes the plant cost estimate very important in any economic study. However, existing cost estimates of synfuel processes have many uncertainties. They are primarily due to uncertainties associated with unproven technologies, changing inflation rates, and wide fluctuations of primary energy prices. There are therefore wide fluctuations among economists, particularly with respect to feedstock rests, price of products, the capital investment needed to build the facilities, and the rates of return on investment.

one can expect that capital investment in first-of-a-kind (pioneer) plants is going to be higher, in equivalent dollars, than later plants designed and built with the benefit of operating experience for the process involved. 9

---

9 Learning experience cost reductions can be very significant. An example applying to a rapidly emerging industry is the chemical and allied products industry, where real non-energy rests declined by nearly 3% yearly for more than two decades.

Larger size plants cost less per unit of product than smaller plants. The relationships between capital cost and plant size is given (Reference No. 28) by the equation:

$$\text{Capital Cost} = ks^{x}$$

where: k is a constant

S is a plant production rate

The exponent, x, is generally somewhere between 0.4 and 0.9, although usually between 0.6 and 0.8. The exponential rule[10] only applies for process plants which are similar in all respects except size. It is generally not applicable for situations where sizes differ by more than a factor of ten.

There are no quantitative estimates of anticipated cost reductions due to experience in building synfuel conversion plants. On the one hand, the immature and undemonstrated nature of many of the synfuel processes suggests cost reductions when the industry will reach maturity. On the other hand, experience has shown that cost overruns in major projects utilizing uncertain technologies are frequent – and perhaps unavoidable occurrence. Exhibit 4-16 depicts cost growth in pioneer energy process plants.

2.13 Conversion Efficiency

High conversion efficieny is an important factor to be desired. It affects not only the product costs and the conservation of resources, but also reduces undesirable health, environmental and socio-economic impacts which are related to the quantities of needed feedstocks that need extraction, transportation, and processing and to the size of the plant. Efficiency is often defined as the ratio of the useful energy leaving the plant in the form of products and by-products to the energy in the input streams, including feedstocks and ancillary energy. In designing conversion plants, optimum efficiency is selected to give the least costly synfuel production. The calculations are relatively simple when applied to balancing of investments with consideration of savings expected on more efficient processes or equipment versus the costs of the investments. However, the calculations become very complicated when they take into account the energy balance of the plant and assume credits for the sensible heats contained in the feedstocks or the products. Since the price of coal, oil shale and many by-products is relatively low on the basis of energy content (relative

---

[10] This exponential rule does not apply to multiple train systems.

to other economic factors) , there are economic constraints to increase absolute efficiency. Also in tires of crash programs, the pursuit of the most efficient design and equipment may need to be compromized to reduce delivery times of equipment and services.

Table 2.3 (Reference No. 29) , summarized process efficiencies for various coal conversion processes. They range between 65 and 70 percent for the coal gasification and direct coal liquefaction processes. They are estimated to be between about 50 to 60 percent for indirect coal liquefaction. When gasification and electric power production are combined, the efficiency drops to about 40 percent.

2.14 Other Requirements and Concerns

In addition to the above mentioned factors that characterize synfuel technologies (size, complexity, costs, conversion efficiencies. ..) , there are additional requirements and concerns that the development of a synthetic fuels industry have. Among them are:

- Labor Require ments. Large labor requirements, both during construction and for operation of the synfuel plants are typical. They are also closely associated with potential socio-economic impacts due to the relatively sudden increases in demand for services and resources* These impacts are mainly influenced by the size of the demand for labor relative to the size of the communities involved. For oil shale facility development in the West, these potential impacts can be large (Reference Nos. 31, 32 and 33) .

- Feedstock Requir ements. As stated earlier, the amount of feedstocks that are required for a generic conversion plant producing 50,000 barrels of oil per day equivalent are very large. About 30,000 - 40,000 tons of coal per day are needed by a typical coal conversion plant and double that amount of shale by an oil shale retorting plant. The demand on coal feedstocks alone has been projected by the EPA (Reference Nos. 31, 32, 33) to increase from about .5% of projected U.S. coal output in 1985, to over 25% in 2000.

- Land Requirements. As discussed earlier and specifically in Reference No. 31. the land requirements for synthetic fuel development includes not only the on-site land requirements of the physical plant, but also the land associated with extraction (mining) and with disposal.

- Water Requipments. As discussed earlier, and specifically in Reference Nos. 31, 32 t synthetic fuel plants require significant quantities of water. In the coal conversion industry, water is

Table 2.3: PROCESS SUMMARY

Process	Developer	Primary Product	Secondary Product	Feed Coal Type/Size	Year Begun	Conf. Index	% Efficency[11] Process/Product	Remarks
SRC - I [12]	Southern Co. Services + EPRI + DOE + Gulf	Solid Boiler Fuel	Naphtha	All types	1962	B-3	71/70	
SRC - II	Gulf + DOE	Liquid Boiler Fuel	Gas LPG Naphtha	All types with ash restrictions	1976	B-4	70/70	
EDS	Exxon	Liquid Boiler Fuel	LPG Naphtha Gas	All acceptabl	3966	C-3	66/64	
H-Coal Fuel Oil H-Coal Syncrude	HRI	Fuel Oil Syncrude	Naphtha Gas			C-2 C-2	/74 /69	
Fischer-Tropsch	Standard Technology used M 50 years	Range of Hydrocarbons	LPG Alcohols NO. 2 Oil Fuel Oil Gas	All coal is gasified	Before 1930	A-2	/48	Depends on gasifier efficiency
M-Gasoline	Mobil for Methanol to Gasoline Conversion	Premium Gasoline	LPG	Any gasifier to methanol process may be used		C-3	/52	
Methanol		Methanol		Depends on gasifier		A-2	/57	

[11] Efficiencies are highly dependent on product mix.

[12] The SRC I process as presently designed for the SRC I precommercial demonstration plant would be a two-stage process which produces liquid fuels, as well as SRC solid. SRC II and EDS produce a distillate syncrude.

SOURCE: Reference 29

Table 2.3: PROCESS SUMMARY
(continued)

Process	Developer	Primary Product	Secondary Product	Feed Coal Type/Size	Year Begun	Conf. Index	% Efficiency Process/Product	Remarks
CO_2 Acceptor	Conoco Coal Development Co.	High Btu Gas Low Btu Gas	None	Lignite or Sub-Bituminous /8x100 mesh	1968	B-2	68/67	Claimed to be the only fluidized bed process that can handle lignites
Hygas	IGT	High Btu Gas	Naphtha	All with pretreat	1954	C-3	78/66	
Bigas	Bituminous Coal Research	High Btu Gas	None	All	1963	C-4	64/60	
Synthane	Bu*lines PERC Lummus	High Btu Gas	Char	All/20 to max 20*-200	1961	C-3	65/63	
CE	Combustion Engineering	Low Btu Gas Electric Power	None	All	1974	C-4	/40	
Westinghouse	Westinghouse	Electric Power Medium Btu Gas	None None	All	1972	C-4 C-4	/38.4 /83	Efficiency shown with induction
Lurgi	Lurgi	High Btu Gas	Tar, Oils Char Naphtha Coal Fines	Non-to low caking	Before 1930	A-2	72/59	Based on 1975 FPC application by ANG-analyzed by Stearns-Roger

mainly used for hydrogen production, coding, waste disposal, and revegetation (Reference Nos. 31, 32, 33). In the case of the oil shale retortirg industry,the main uses are for oil shale rein@, retorting, fuel upgrading, revegetation, and spent shale disposal (Reference Nos 8, 31, 33) .

- Equipment Requirements. There are many kinds of equipment that will be required by the synthetic fuel industry. Among these items are:

  For coal conversion: fabricated vessels, heat exchangers, rotating machinery, materials handling equipment, packaged plants, turbine generator sets, pollution control devices, piping, valves, and instruments and controls. The largest items are fabricated vessels, instruments and controls. They alone have been considered (Reference No. 34) to amount for over 50% equipment needs.

  For shale conversion: steel castings valves, air coolers, shell and tube exchanqers, fired heaters, and boilers, preps, compressors, and pressure vessels, and tanks.

In the following chapters, we will look at these factors in more detail. Chapter 3 will discuss the individual process technologies; chap* 4 will discuss the important assesment of costs; and Chapter 5 will discuss the projected deployment schedules of synfuel production.

CHAPTER 3 : OVERVIEW OF SELECTED SYNTHETIC FUEL CONVERSION PROCESSES

Section No.		Page
3.1	General Synfuel Processes.	3-1
3.2	Coal Gasification.	3-2
3.3	Coal Liquefaction.	3-8
	3.3.1 General	3-8
	3.3.2 Liquid Solvent Refined Coal (SRII)	3-11
	3.3.3 Exxon Donor Solvent	3-14
	3.3.4 H-Coal.	3-17
	3.3.5 Fischer-Tropsch Process . . .	3-21
	3.3.6 Methanol Process.	3-26
3.4	Oil Shale Retorting.	3-31
	3.4.1 General	3-31
	3.4.2 Surface Retorting	3-31
	3.4.3 Modified In Situ Retorting. . .	3-36
3.5	Comparison of the various Synfuel Systems With Respect to Resource Requirements	3-40

Chapter 3: OVERVIEW OF SELECTED SYNTHETIC FUEL CONVERSION PROCESSES

3.1 General Synfuel Processes

The General term " synfuel processes" applies to the following:

1. Upgrading of coal. to gaseous, liquid or solid products with improved characteristics.

2. creversion of the kerogen in oil shale to gaseous or liquid fuels or products.

3. Recovery of petroleum crudes from non-conventional oil resources such as heavy oils and tar sands.

Upgrading of coal by subjecting it to a reaction with steam at high temperatures and pressures in the presence of air or oxygen, or to hydrogen, with or without a catalyst, is called conversion. The coal can be converted to gaseous (gasification) or liquid (liquefaction) hydrocarbons. The products have a much lower content of sulfur than the original coal. Oil shale can be retorted by subjecting it to high temperature and pressure, also producing gaseous or liquid hydrocarbons . Catalysts are used in synfuel processes when there is need to accelerate the reaction rates and affect the product state.

In this report, the following processes are included:

1. Coal gasification

   - to medium Btu gas: generic
   - to high Btu gas: generic

2. Coal Liquefaction

   - by pyrolysis (none included)
   - by solvent extraction: liquid solvent refined coal (SRC II)
     Exxon donor solvent (EDS)
   - by catalytic liquefaction: H-coal
   - by indirect liquefaction: Fischer-Tropsch (FT) Methanol

3. Oil shale retorting using:

   - true in situ retorting (none included)
   - modified in situ: generic
   - surface retorting: generic

3.2 Coal Gasification

The process by which coal is gasified involves reactions of devolatization of coal with steam at elevated pressures and temperatures to produce CO and H_2O. Gasification of coal involves basically

the following reaction between steam and carbon:

$$C + \text{Air or Oxygen} + H_2O \rightarrow CO + H_2 + \text{Heat}$$

There are many processes by which coal can be gasified producing low-, medium- or high-Btu gas. The definitions of the heat content of each of then are not rigorous. Low-Btu gas is a mixture of carbon monoxide, hydrogen and nitrogen. It has a heating value of less than 300 Btu per standard cubic foot[1] (Reference No. 25)=. This gas is of interest to industry either as a combustible fuel or as a raw material from which ammonia, methanol, and other compounds may be synthesized. Due to the low heating value, it cannot command high enough prices to justify long distance transport. Medium-Btu gas is a mixture of methane carbon monoxide, hydrogen, and other gases. It has a heating value between 300 and 700 Btu per standard cubic foot (Reference No. 25) . It is suitable as a fuel for industrial consumers, but because of its low heating value, is not economic to transport over great distances. High-Btu gas consists essentially of methane. It has a heating value of approximately 1000 Btu per standard cubic foot, and is compatible with natural gas in that it can be substituted for natural gas in existing pipeline systems.

Coal gasification processes can be divided into three major process types, according mainly to the way in which the feedstock coal, steam, and the product gases are contacted. They are:

1. Fixed bed gasification in which the crushed, sized coal is fed from the top of the reactor vessel. Steam, air or oxygen are blown upwardly.

2. Fluidized bed gasification in which the finely sized coal particles are "fluidized" by the steam, air or oxygen, which are piped through them.

3. Entrained bed gasification: in which the even finer coal particles are blown into the reacting gas stream prior to entry into the reactor. The coal particles are suspended in the gas phase, and are filtered and recycled until a product gas with a suitable heating value is produced.

Figure 3.1 (Reference No. 31) describes the main features of these three processes.

---

[1] Usually, low-Btu gas has a heating value below 200 Btu per SCf; and medium-Btu gas ranges in heating value between 300 - 350 Btu per Scf .

Figure 3.1: Basic Coal Gasification Processes

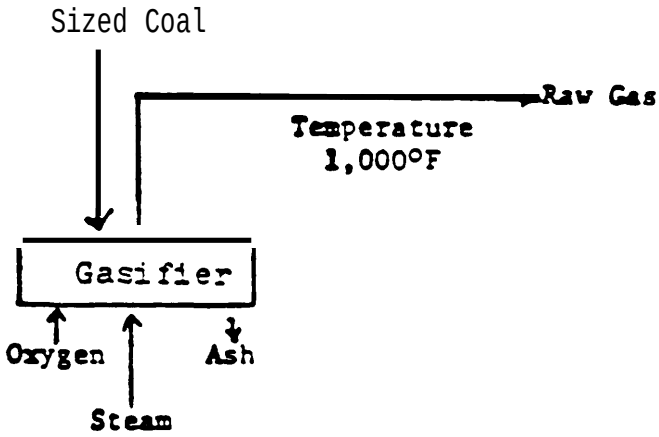

Fixed Bed Gasification e.g. Lurgi

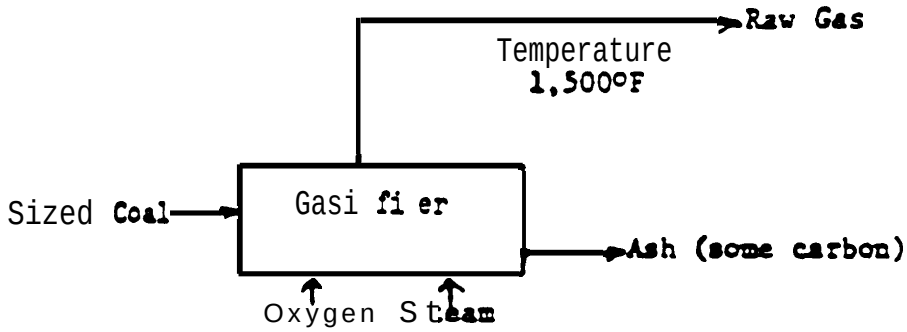

Fluid Bed Gasification e. g. Winkler

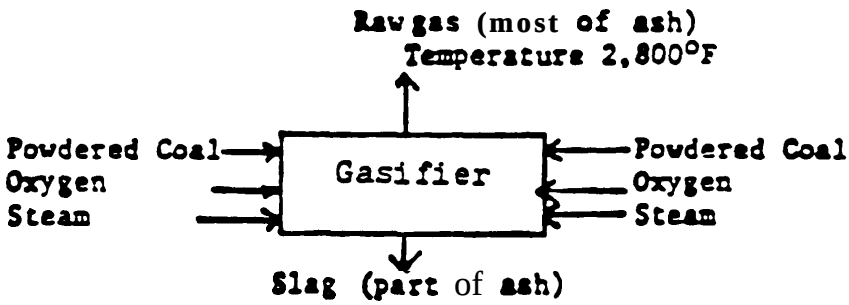

Entrained Gasification e. g. Koppers-Totzek

SOURCE : Reference 31

ejb &a

Figure 3.2 (Reference No. 31) is a schematic diagram of coal gasification. It represents the whole coal gasification fuel cycle, including the production of low-, medium- or high-Btu gas. All of these gasification processes share a number of process steps. If high-Btu, pipeline-quality gas is desired, essentially all of the following process steps are required. In some cases, some of them may be omitted, depending on the type of coal being processed and the type of gas product desired. The process steps are as follows (Reference No. 25).

1. Pretreatment of coal[2] (if sizing or caking are problems).
2. Primary gasification of coal.
3. Secondary gasification of carbonaceous residue from primary gasifier.
4. Removal of CO_2, H_2S, and other acid gases.
5. shift conversion for adjustment of the carbon monoxide/hydrogen mole ratio to the desired 1:3.
6. Catalytic methanation of the carbon monoxide/hydroqen mixture to form methane.

Pretreatment

The coal received at the plant must be further cleaned and crushed or ground before it can enter the gasifier. Extaneous materials such as shale, rocks, metal, etc. are removed by conventional cleaning methods. For fluidized or entrained gasification processes, the coal needs to be finely ground. Crushing and sizing may also be required for other processes. In the case of certain bituminous coals called caking coals, agglomeration of the material is observed when they are heated. Treatment is needed if they are to be gasified by fluidized or Moving bed processes, or even in fixed bed reaction. The caking characteristics are destroyed when the coal is heated to low temperatures in the presence of air or oxygen.

---

2 Pretreatment of coal by partial oxidation with air or oxygen is not in general a cost-effective approach to destroying the caking characteristics of certain coals, such as Eastern bituminous coals, because of the loss of Btu values of the coal in producing CO_2 & H_2O. The caking problem is a serious problem in the processing of such coals and limits the applicability of current commercial gasifiers such as the dry-bottom Lurgi to Western Subbituminous coals and lignite.

Figure 3.2: Schematic Diagram of Coal Gasification

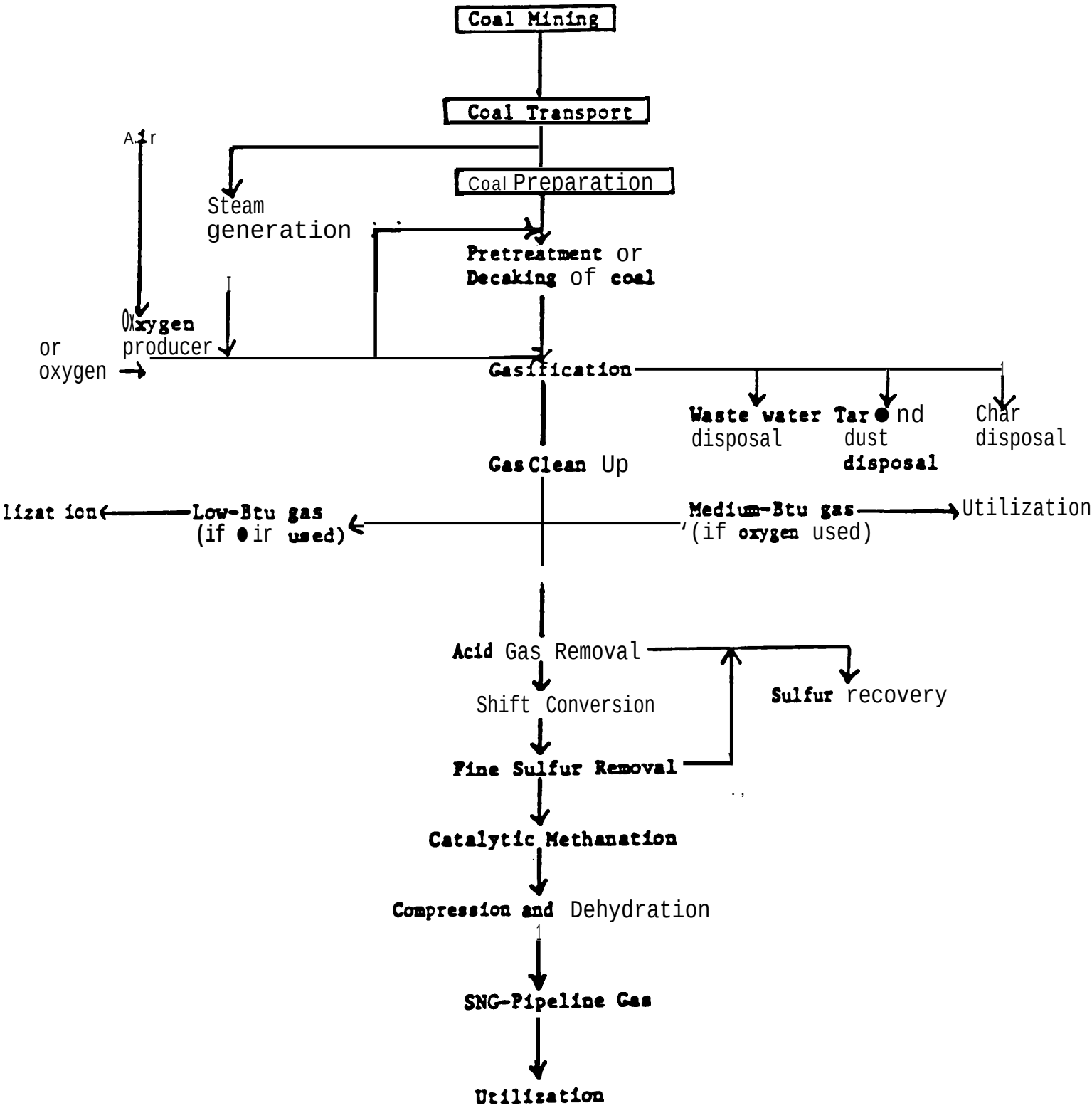

SOURCE: Reference 31

ejb&a

Primary Gasification

This is the heart of the process, and is basically a pyrolysis process of the raw coal. The coal feed is contacted with synthesis gas (carbon monoxide and hydrogen) . The coal is devolatized according to the following general reaction (Reference No. 25).

COAL + HEAT (Pyrolysis) + Methane, water, tars, phenols, hydrogen sulfide, hydrogen, carbon dioxide, char, etc.

The pressures used for gasification range from atmospheric pressure to 1000 psi. The heat required to maintain the endothermic gasification reaction is supplied from burning coal. Air or oxygen are also needed to support the combustion reaction. If air is used, the product is low Btu gas ranging from essentially a carbon monoxide/hydrogen mixture (Koppers-Totzek process) to mixtures containing various proportions of carbon monoxide, carbon dioxide, hydrogen, water, methane, hydrogen sulfide, nitrogen, and typical products of pyrolysis such as tar, oils, phenols, etc. If oxygen is used, medium Btu gas results.

The bulk of the original coal is transformed into a solid char. Certain coals are more “reactive” to gasification than others. Thus the type of coal being processed determines to a large “extent the amount of char produced, and the analysis of the gaseous products. The char is usually gasified by additional processing steps, or is marketed.

Secondary Gasification

Secondary gasification involves the gasification of char from the primary gasifier. This is usually done by reacting the hot char with water vapor to produce carbon monoxide and hydrogen.

If the desired final product is either low- or medium-Btu gas, secondary gasification is usually followed by scrubbing and cleaning. Carbon dioxide and sulfur compounds are partially removed, and the resulting gas is used directly. If high-Btu gas is desired, shift conversion and methanation are further required.

Shift Conversion

In most gasification processes, a shift reaction is employed prior to methanation. Its-purpose is to react

a portion of the carbon monoxide with steam to form more hydrogen.

$$CO + H_2O \rightarrow CO_2 + H_2$$

By this exothermic reaction the ratio of carbon monoxide to hydrogen may be increased to 1:3 mole ratio needed to produce methane. Otherwise, deactivation of the catalyst used in the methanation takes place.

The catalytic shift conversion reaction is a well-known process, but it has not been applied on the large scale required for commercial coal gasification. For coal gas shifting, conventional iron-chromium catalysts may be used; however, the coal gas stream must be purified prior to shifting (Reference No. 25).

Methanation

If carbon monoxide and hydrogen are present in the mole ratio of 1:3, the coal gas can be reacted in the presence of a catalyst to produce methane. Group VII transition elements such as iron, cobalt, nickel, ruthenium, rhodium, palladium, osmium, iridium, and platinum have been found to be effective catalysts. The following exothermic reactions occur simultaneously within the methanation unit (Reference No. 25).

$$CO + 3H_2 \rightarrow CH_4 + H_2O$$

$$CO_2 + 4H_2 \rightarrow CH_4 + 2H_2O$$

$$CO + H_2O \rightarrow CO_2 + H_2$$

$$2CO \rightarrow CO_2 + C$$

Special care must be taken to prevent deactivation of the catalyst by temperatures above 750°F. It can also be Poisoned by carbon deposition. These can be circumvented by ensuring that the mixture of carbon monoxide and hydrogen shall be fed to the methanator in the ratio of 1:3. Scrubbing of sulfur from the synthesis gas feed is employed to alleviate sulfur poisoning of the catalyst.

The final step to prepare high Btu gas for marketing is to remove water to specified levels. The product gas usually undergoes compression prior to storage *or* marketing.

3.3 Coal Liquefaction

303.1 General

Coal liquefaction processes are conversion processes in which liquids are the primary products. Some gases and solid char may also be produced.

There are two basic routes to coal liquefaction, namely direct and indirect liquefaction. In direct processes, slurried crushed coal is reacted directly with hydrogen at high temperature and pressure conditions to produce liquid hydrocarbons. In indirect liquefaction, coal is first gasified to produce a hydrogen-and carbon monoxide mixture. Further recombination with the aid of a catalyst produces liquid products.

Direct liquefaction is further broken down into three generic processes, namely: pyrolysis, solvent extraction, and catalytic liquefaction. The yields and physical properties of the produced liquid products depend directly on the reactor conditions and degree of hydrogenation.

Pyrolysis

In pyrolysis processes, coal is heated to temperatures above 750°F. It is converted into gases, liquids, and char. The latter accounts for more than 50 percent of the weight of the feed coal and requires hydrogenation. Some amount of solids remain in the raw gas and liquid products. They consist of unreacted coal and ash, and can be relatively easily removed from the gas stream. But the liquid requires filtration, distillation, or some other treatment to remove the solids.

Solvent Extraction

This process makes use of coal derived liquids known as “donor” solvents to increase the fraction of the coal that goes into solution. The “donor” solvents act as source of hydrogen to the coal products, and are reacted[a] together at temperatures up to 950°F. Hydrogen may be supplied under pressure in the extraction step, or it may be used to hydrogenate the solvent prior to recycle. In some processes the unreacted coal is used to generate the necessary hydrogen. In other processes, the hydrogen is generated from by-product gases or from additional raw coal.

Catalytic Liquefaction

In this process, pulverized coal is mixed with 1-1.5 parts of recycle solvent. A suitable catalyst is used to add hydrogen. Most precesses of this type operate in the liquid phase with catalyst dispersed throughout or in a fixed bed. Some prccesses now in the development stage involve the injection of catalyst-impregnated coal into a stream of hot hydrogen at about 950° F for a very short time (Reference No. 25) .

Indirect Liquefaction

Two stage conversion of coal typifies indirect liquefaction processes. Coal is first reacted with steam and oxygen to produce a gas composed primarily of carbon monoxide and hydrogen. This gas stream is subsequently purified to *remove sulfur,* nitrogen, and ash. The product gas is then catalytically reacted to yield liquid hydrocarbon products.

Figure 3.3 (Reference No. 31) presents a schematic diagram of the basic liquefaction processes. Each of them produces several types of products and sane gas, which may be used within the plant.

Removal of solids from coal liquids is a critical step in most of these liquefaction processes. Although there is currently a trend toward elimination of the solid-liquid separation step by the recovery of a solids-laden vacuum bottoms stream for gasification, most existing plant designs call for some type of physical/chemical solids removal systen. 3 The three processes receiving the most current interest are critical solvent deashing, antisolvent deashing, and pressure filtration (Reference No. 25) .

Separation of ash and unreacted coal particulate from coal liquids is difficult because of the small size and large quantity of the solid particles, the snail density difference between solids and the liquid, and the high viscosity and melting point of the liquids. The Kerr McGee Corporation has been developing a separation technique which utilizes solvents such as benzene, toluene, xylene, pyridene, and cresols near their critical temperature and pressure, hence the term solvent deashing (Reference No-. 25) .

---

3 Solid\liquid separation is a critical step only in direct liquefaction process. Most modern coal hydroliquefaction processes in the pilot plant stage of development, such as SRCII , EDS , H-Coal (syncrude rode) do not require a solid/liquid separation stage.

Figure 3.3: Schematic Diagram of the Basic Liquefaction Processes*

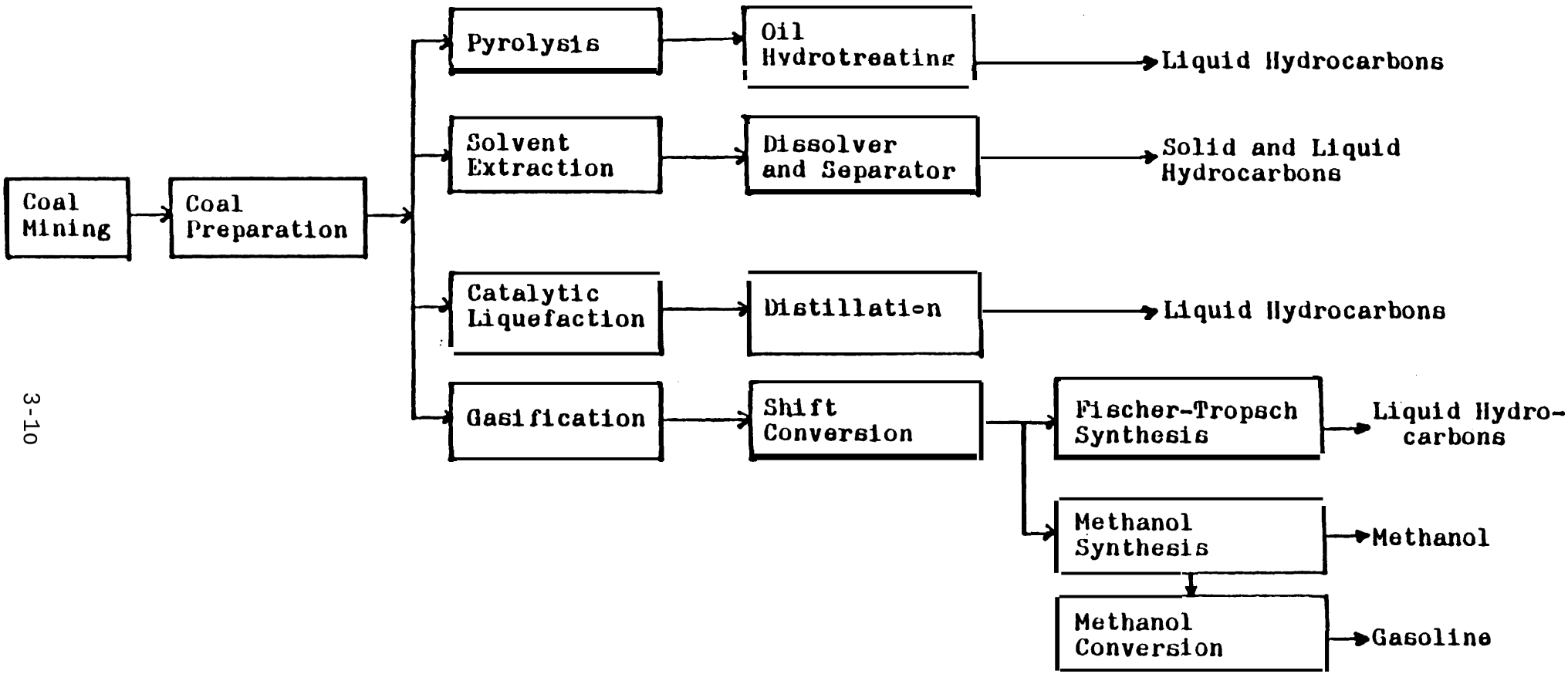

* Only major products are shown. The last process represents indirect liquefaction.

SOURCE: Reference 31

3.3.2 Liquid Solvent Refined Coal (SRCII)

The SRCI process was developed to convert high-sulfur, high-ash coals to low-sulfur and ash solid fuels. The SRCII is the same kind of process, except the product is a liquid rather than a solid. This is achieved by adding more hydrogen through the followinq steps:

1. Recycling of a portion of the product slurry as solvent for the feed coal.

2. Higher residence time in dissolver.

3. Higher pressure.

4. Use, of vacuum distillation to separate solids from liquid, rather than the troublesome filtration step employed in SRCI .

Figure 3.4 is a schematic diagram of the SRCII process (Reference No. 35) . Table 3.1 summarizes the components, resource requirements, and potential impacts of this process (Reference No. 17) . The feed coal is first pulverized to less than 1/8" size, dried and mixed with process derived solvent in a slurry mix tank (Reference No. 35) . Feed coal is limited to those containing certain trace mineral elements which may be required to act as catalysts for the breaking of solids to liquids in the liquefaction reaction[4] (Reference No. 291. However, in cases where the problem is concentration rather than the presence of specific trace elements, a recycle of residue may broaden the allowable coal feeds (Reference No. 29) . The coal slurry is then mixed with hydrogen generated by gasification of the vacuum bottoms from the liquefaction step and reacting with steam and oxygen in a gasifier-converter. The slurry is pumped through a preheater (700 to 750°F) and passed through a dissolver (2000 psi, 820 to 870°F) to dissolve about 90 percent of the coal (Reference No. 35) . The following additional reactions take Place in the dissolver (Reference No. 35) .

1. The coal is depolymerized and hydrogenated.

2. The solvent is hydrocracked to form lower molecular weight hydrocarbons, ranging from light oil to methane.

3. Much of the organic sulfur is removed in the form of hydrogen sulfide.

The *sultry stream* from the dissolver is split into two. One is recycled to provide solvent for coal slurry mixing. The other is fractionated to recover the primary

---

[4] Opinions differ about the role of the trace minerals as catalysts. The primary "catalyst" in the SRCII process may well be the pyritic mineral matter contained in the coal and not "trace mineral elements. "

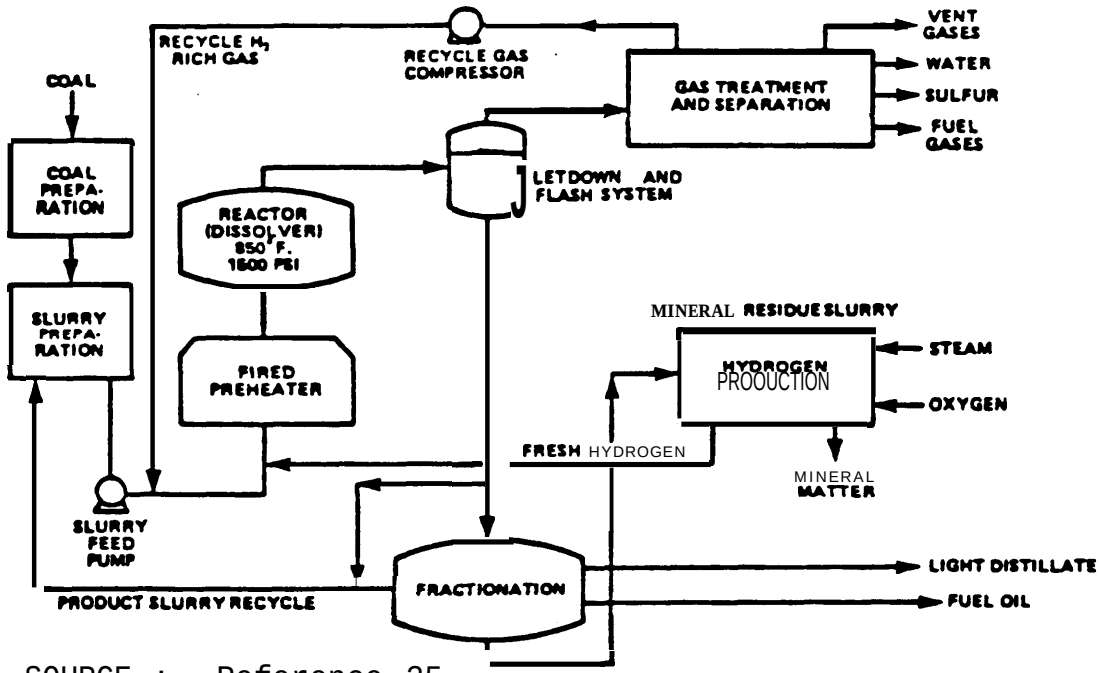

SOURCE : Reference 35

Figure 3.4

A SCHEMATIC DIAGRAM OF THE
SOLVENT REFINED COAL (SRC-II) PROCESS

TABLE 3.1

Solvent Refined Coal II

ENERGY SYSTEM:

SIZE:
- 30,000 bbl/day[2]
- 0.335 x 10^{12} Btu/day[2]
- 90% plant availability[2]
- operates 329 days/year[2]
- 110.22 x 10^{12} Btu/year[2]
- 31,552 tons per day ROM coal[a]
- efficiency 64%[d]
- plant life 30 years[a]
- 6.7 x 10^{6} Btu/bbl[2]

DESCRIPTION
- Coal is crushed to about 200 mesh and dried to three percent moisture and slurried with a solvent. A 70 to 85 percent hydrogen mixture is added. This mixture is first preheated, then hydrogenated in the reactor. The temperature is 425 to 495°C; pressure 68 to 136 atmospheres. Liquefaction produces a mixture of gases, vapor, liquids, and solids. The gases and vapors are separated from the liquids and solids and the vapors condensed. The liquid is separated from the solid by filtration (SRC II).

COMPONENTS
- crushers
- SRC reactor
- drying unit
- pre-heaters
- gas recovery plant
- filtering unit

ENVIRONMENTAL CONCERNS
- air emissions
- water pollution from runoff and leachates
- solid waste
- occupational hazards and health effects
- noise pollution
- odor

RESOURCES USED:
(Per 10^{12} Btu Produced)

FUEL(DAF)[c]	
coal:bituminous, plant input	60,919 tons
energy content	12,821 Btu/lb

COAL ANALYSIS(DAF)[a]	% by weight
moisture	2.70
volatile matter	35.09
fixed carbon	51.70
sulfur	1.38
ash	7.13

LAND[c]	Acres
plant facilities	3.5
solid waste (per year)	0.21

WATER[c]	Acre-Ft.
cooling towers	64.5
plant use	11.0
steam	13.1
miscellaneous	0.9
total	89.5

COSTS	
construction	NA
operation	NA

PERSONNEL	
construction	NA
operation & maintenance	NA

RESIDUALS AND PRODUCTS:
(Per 10^{12} Btu Produced)

AIR POLLUTANTS[c]	Tons
particulates	1.6
SO_2	2.0
NO_2	16.0
hydrocarbons	1.0
CO	1.0

arsenic	1.8 x 10^{-6}
cadmium	1.7 x 10^{-4}
mercury	2.9 x 10^{-5}
zinc	1.3 x 10^{-3}
chromium	2.7 x 10^{-4}
nickel	5.9 x 10^{-4}
lead	6.2 x 10^{-4}
polycyclic organic material	1.5 x 10^{-9}

WATER POLLUTANTS
no direct discharge to any watercourse

SOLID WASTE[c]	Tons
dry ton equivalent	36,167[1]

ENERGY PRODUCT[2]	Equivalent Barrels
syncrude (SRC II) (energy content = 6.7 x 10^{6} Btu/bbl)	149,254

*The data presented are based on a conceptual design of a commercial facility. The data will be updated when more current data become available. The data should not be used directly for comparison with other coal liquefaction processes.

(1)After coal preparation includes solid waste from mine burial and tailings pond.
(2)Representative values selected for analysis purposes.

SOURCE: (a) Bittman Associates, Inc., Standards of Practice Manual for Solvent Refined Coal Liquefaction Process, 1978.
(b) Bittman Associates, Inc., Environmental Assessment of Coal Liquefaction, 1978.
(c) TRW, Characterizations and Data in the Area of Coal News Environmental Data Book, Volume IV, 1978.
(d) Plash and Pryor, Boiler Fuel and Building Blocks, 1978.

SOURCE: Reference 17

ejb&a

products which consist of naphtha, low sulfur fuel oil, and a vacuum residue which is separated from the solution in a filtration unit. The residue consists of heavy oil, ash and undissolved organic material from the coal (Reference No. 25).

The gases from the dissolver are treated to remove hydrogen sulfide and carbon dioxide. Liquid petroleum gases and pipeline gas are separated in a cryogenic separation unit. Unreacted hydrogen is recovered and recycled.

Recent developments have resulted in increased efficiency of the SRCII process. A combination of solid and liquid products are produced. A wide range of products can be obtained depending on the severity of recycling. Table 3.2 (Reference No. 25) shows the properties of a typical mix of products.

3.3.3. Exxon Donor Solvent (EDS)

The process is similar to SRCII, except that the major portion of the hydrogen supplied as part of the solvent is chemically combined rather than in the form of a free dissolved gas (Reference No. 29). A schematic diagram of the process is illustrated in Figure 35 (Reference No. 35). Crushed coal is liquefied in a reactor at 800-880°F and 1500 - 2000 psig (Reference No. 25). The reaction is non-catalytic, in the presence of molecular hydrogen and the hydrogen-donor solvent, which transfers hydrogen to the coal. The product from the liquefaction reactor is separated into two portions. One part is sent to the solvent hydrogenation unit to produce donor solvent. It is a catalytically hydrogenated recycle stream which is fractionated from the middle boiling range of the liquid product, and has a boiling range of 400 - 850°F (Reference No. 25). After hydrogenation, the solvent is mixed with fresh coal feed, heated in a furnace, and pumped into the liquefaction reactor.

The other portion from the product liquefaction reactor is a slurry. It is separated by distillation into gas, naphtha, middle distillate, and a bottom product that contains heavy liquid, untreated coal and mineral matter. The vacuum bottoms slurry is cooked to produce additional liquids.

The major advantages of the EDS process are:

1. High yields of low sulfur liquids are obtained from bituminous and sub-bituminous coals or lignites (Reference No. 25). A yield

TABLE 3.2

TYPICAL PROPERTIES OF SRC FUELS
USING RECYCLE SRC II PROCESS

	Solid Fuel	Distillate Fuel
Gravity: 'API	-18.3	5.0
Approximate Boiling Range: 'F	800+	400-800
Fusion Point: 'F	350	
Flash Point: 'F		168
Viscosity: SUS at 100°F		50
Sulfur*: Percent	0.8	0.3
Nitrogen*: Percent	2.0	0.9
Heating Value: Btu/lb.	16,000	17,300

* Assuming Western Kentucky coal feed with 4% Sulfur and 2% Nitrogen.

SOURCE: Reference 15

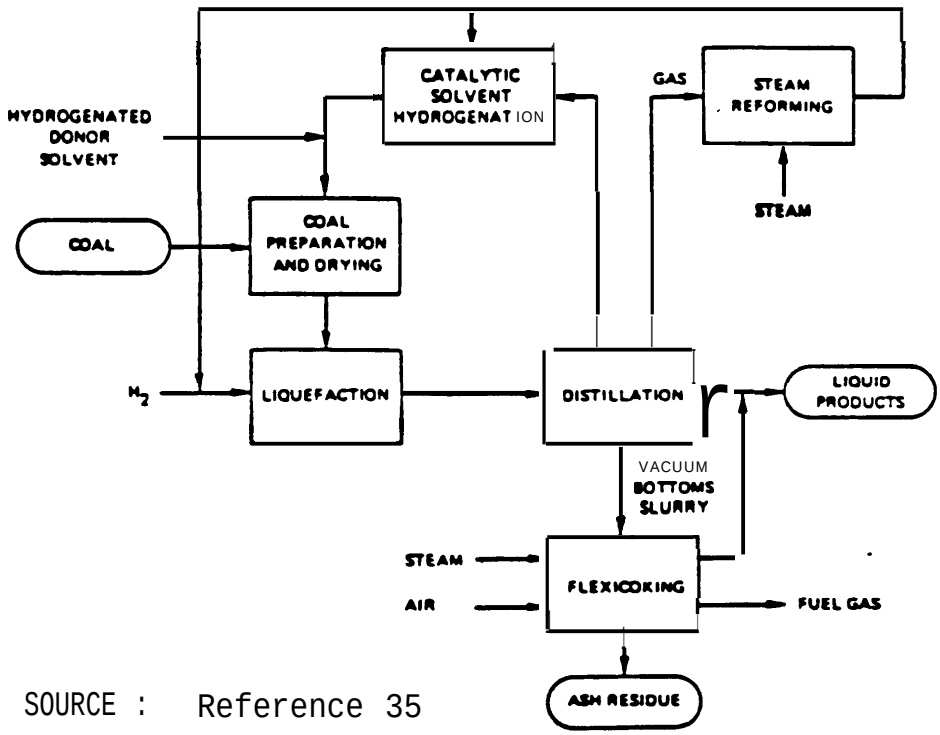

SOURCE : Reference 35

Figure 3.5
A Schematic Diagram of the
Donor So I vent Liquefaction Process

of 2.6 barrels of liquids per ton of dry coal is typical for an Illinois bituminous coal (Reference No. 25).

2. The only by-products of significance are ammonia and elemental sulfur (Reference No. 25).

3. There is wide flexibility in product distribution by varying liquefaction conditions or adjusting solvent properties (Reference No. 25).

The typical properties of the products from the EDS process are shown in Table 3.3 (Reference No. 25]. An estimated heat balance is given in Table 3.4 (Reference No. 35).

3.3.4 H-Coal

The H-coal process converts coal to hydrocarbon liquids by hydrogenation with a cobalt-molybdenum catalyst. An ebullated bed reactor is employed. The liquid products may range from a heavy boiler fuel to a synthetic crude product (Reference No. 25).

Figure 3.6 (Reference No. 35) is a schematic diagram of the H-coal process. Coal is first crushed to minus 60 mesh, dried, and then slurried with recycled oils at pressures of approximately 200 atmospheres (Reference No. 25) " Mixing of the slurry with compressed hydrogen follows, and the mixture is preheated. The material is pumped to the bottom of the ebullated bed reactor, with the-upward flow of slurry through the reactor maintaining the catalyst in a fluidized state (i.e. random motion) . The catalyst needs periodic additions of fresh catalyst and withdrawals of spent portions. Typical temperatures of the slurry entering the reactor are 650 - 700°F (Reference No. 25). The finely divided coal and ash particles flowing through the ebullating bed are removed with liquid and vapor products.

The reactor effluent is separated into recycle and net product streams. Conventional processing equipment is used. The liquid stream is distilled to produce a mixture of light distillate and a heavy distillate product. Gaseous products composed of hydrocarbon gas, hydrogen sulfide and ammonia are separated. A portion of the heavy distillate is recycled as the slurrying medium.

The operating conditions of the H-Coal process can be altered to produce various types of primary products. For

TABLE 3-3

DONOR SOLVENT PRODUCT ANALYSES

	Heavy Naphtha[1]		200°C+ Fuel Oil	
	Raw Liquid	Hydrotreated Liquid	Raw Liquid	Hydrotreated Liquid
Nominal Boiling Range, °C	70/200	70/200	200/540	200/540
Distillation, 15/5°C				
10 wt. %	106	92	247	239
50 wt. %	180	157	368	347
90 wt. %	199	182	433	412
Density (g/cm^3)	0.87	0.80	1.08	1.01
Elemental Analysis, Wt. %				
C	85.60	86.80	89.40	90.80
H	10.90	12.90	7.70	8.60
O	2.82	0.23	1.83	0.32
N	0.21	0.06	0.66	0.24
S	0.47	0.005	0.41	0.04
Higher Heating Value MJ/kg	42.6	44.9	39.8	42.1

[1] Excludes C_6/70°C naphtha cut

SOURCE: Reference 25

Tab l e 3.4

Estimated Heat Balance for a Commercial Scale EDS Plant

	Btu/day (10 Btu's)	Percent of Total Energy Input
System Products		
Liquids	323,071	61.72
Sulfur, ammonia	8,309	1.59
System Losses		
Ash, combustibles and sensible heat	26,082	5.13
Stack losses	20,039	3.83
Energy losses via water and air	136,853	26.14
Liquefaction and solvent hydrogenation (9.80%)		
Flexicoking (6.44%)		
Hydrogenation and recovery (6.72%)		
" By-product recovery, offsites, and miscellaneous (3.18%)		
Other miscellaneous	8,309	1.59
Energy Input		
Coal (cleaned)*	488,761	93.37
Electrical power**	34,702	6.63

* Coal - Illinois No. 6; 10,574 Btu/lb as received prior to cleaning

** Power based on 8,500 Btu/kwh to generate

SOURCE: Reference 35

ejb&a

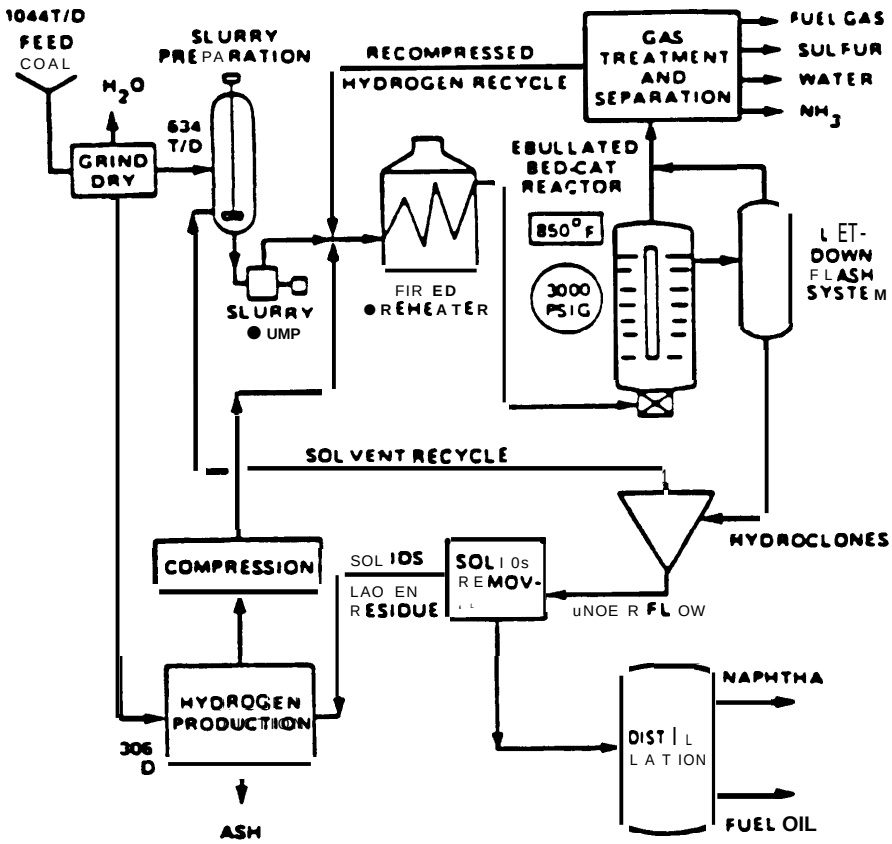

SOURCE : Reference 35

Figure 3.6

SCHEMATIC DIAGRAM OF THE
H-COAL PROCESS

ejb&a

example, relatively high temperatures and high hydrogen partial. pressures are used to produce a synthetic crude products. Vacuum distillation is used to separate the solids from the liquid phase. If gas and oil are desired, lower temperatures and pressures are used (Reference No. 25) . Conversion and yield structure are determined by reactor conditions, catalyst replacement rate, and recycle slurry oil composition (Reference No. 29) .

Table 3.5 (Reference No. 25) summarizes the properties of both the fuel oil syncrude products from H-coal.

Table 3.6 (Reference No. 17) summarizes the components , resources and potential impacts from H-coal process. It requires between 14,000 and 20,000 standard cubic feet of hydrogen for each ton of coal produced. Hydrogen consumption depends on the type of product produced, with less hydrogen required during the production of residual oil (Reference No. 25) .

3.3.5 Fischer-Tropsch Process

A commercial plant using a modification of this process is currently operaing in South Africa (Reference No. 36). This is the only commercial sized plant producing synfuels. Table 3.7 (Reference No. 35) is an overview of this plant.

In the Fischer-Tropsch process the coal is initially gasified (for description of gasification see section 3.2 of this report) . The synthesis gas is then converted to largely aliphatic hydrocarbons using an iron or cobalt catalyst.

Figure 3.7 (Reference No. 35) is a schematic diagram of the SASOL I plant, which utilizes the Fischer-Tropsch process. Thirteen high pressure gasifiers convert coal in the presence of steam and oxygen to medium Btu gas containing mainly carbon monoxide, tars and oils. The product gas is then cleaned of carbon dioxide, hydrogen sulfide, organic sulfur, ammonia, and phenols. The cleaned gas is then subjected to the catalytic Fischer-Tropsch reaction which produces a mixture of gases, liquid hydrocarbons, and an aqueous chemical mixture that must be further processed to set the desired plant output .

The cleaned gas from the Lurgi gasifiers is partitioned into two streams . One stream is reacted in a fixed bed catalytic reactor to produce straight chain and medium boiling oils, diesel oil, LPG, and some alcohols. Operating conditions are 450°F and 360 psig (Reference No. 35) . The other stream is combined with reformed product gas to increase the hydrogen to carbon ratio. It is reacted in a fluidized bed reactor

TABLE 3.5

PROPERTIES OF H-COAL DISTILLATES
FROM ILLINOIS NO. 6 COAL LIQUIDS

Property	Fuel Oil		Syncrude	
	<203°C distillate	>203°C distillate	<197°c distillate	>1970C distillate
Specific gravity, 60°/60°F	0.864	0.979	0.838	1.025
Gravity, 'API	32.3	13.0	37.4	6.6
Pour point, ASTM D-97, °F	<5	<5	<5	<5
Color, ASTM D-1500 or (BuMines description)	NPA6	Brownish black	NPA4-1/2	Brownish black
Kinematic viscosity @ 100°F, ASTM D-455, C_s	1.08	3.87	0.96	14.90
Saybolt viscosity, SUS, 100°F		39		77
Sulfur (Bomb) ASTM D-129, wt-pet	0.13	0.29	0.06	0.35
Nitrogen, Kjeldahl, Wt-pet	0.420	0.446	0.212	0.871
Carbon residue (Conradson) ASTM-524, Wt-pet	0	2.33	0	5.44

SOURCE: Reference 25

TABLE 3.6

H-Coal

ENERGY SYSTEM:

SIZE
- 50,000 bbl/day
- $.32 \times 10^{12}$ Btu/day
- 105.12×10^{12} Btu/year
- 90% plant availability
- operates 328.5 days/year
- efficiency 70%
- plant life 30 years

DESCRIPTION
- Coal is crushed to about 3/4 inches and then ground to minus 60 mesh and mixed with recycled oil. The slurry is then preheated and fed to the reactor and hydrogenated as it comes in contact with the ebullating bed of catalyst. Reaction temperature is about 350°C. Gases and vapors are then withdrawn from the top of the reactor and passed through condensers for product separation. The heavier product is withdrawn as a side-stream from the reactor and pumped to an atmosphere distillation unit.

COMPONENTS
- crushers
- drying unit
- hydrogen plant (gasifier)
- H-coal reactor
- gas recovery plant
- distillation unit

ENVIRONMENTAL CONCERNS
- ● ir emissions
- solid waste
- water pollution from runoff and leaching
- occupational hazards and health effects
- noise
- odor

RESOURCES USED:
(Per 10^{12} Btu Produced)

FUEL	
coal: bituminous	57,756 tons
energy content	11,900 Btu/lb
COAL ANALYSIS	**% (by weight)**
moisture	2.7
volatile matter	35.5
fixed carbon	51.7
sulfur	3.0
ash	7.1
LAND(1)	**Acres**
plant facility	3.9
solid waste disposal	0.31
CONSUMPTIVE WATER USE	**Acre-Ft.**
process water	9.3
cooling water	101.6
waste water	7.8
potable	.3
other (utility, quench, etc)	2.0
Total	121.0
COSTS (2)	**Dollars (1975)**
construction	6,200,000
operation	3,700,000
PERSONNEL	**Workers**
construction	NA
operation & maintenance	4.1

RESIDUALS AND PRODUCTS:
(Per 10^{12} Btu Produced)

AIR POLLUTANTS	**Tons**
particulates	6.4
SO_2	20.2
NO_x	48.9
hydrocarbons	0.6
CO	NA
● rsenic	0.1
cadmium	1.1×10^{-2}
mercury	6.2×10^{-3}
● lbr	5.9×10^{-2}
chromium	0.1
● lch*l	3.3×10^{-3}
lead	1.1×10^{-2}
polynuclear ● SSMIC material	NA

WATER POLLUTANTS
no direct discharge into any water source

SOLID WASTE(3)	**Tons**
dry ton equivalent	5,705
ENERGY PRODUCT	**Barrels**
liquid fuel	156,250
(energy content Btu/bbl)	6.4×10^6

*The data presented are based on a conceptual design of a commercial facility. The data will be updated when more current data become available. The data should not be used directly for comparison with other coal liquefaction processes.

(1) This represents land committed to use over the lifetime of the plant, divided by the annual output of the plant, expressed in trillion Btu., (405 acres ÷ 105.12 = 3.9 acres)
(2) This represents total cost of constructing the plant, divided by the annual output of the plant, expressed in trillion Btu. (8650 million ÷ 105.12 = 86.2 million).
(3) Does not include solid waste from mine burial and tailings pond.

SOURCES: Bittman Associates, Inc., Environmental Assessment of Coal Liquefaction, 1978.
TRW, Characterizations and Data in the Area of Coal Base Environmental Data Book, Volume IV, 1978.
U.S. Energy Research and Development Administration, Synthetic Liquid Fuels Development: Assessment of Critical Factors, ERDA 76-129/2.
Pluer Engineers and Constructors, Inc., H-Coal, Commercial Evaluation FE-2007-12. March 1978.

SOURCE: Reference 17

TABLE 3.7

Overviews on SASOL I and SASOL II, based on reference 8, follow:

SASOL 1

LOCATION:	Sasolburg, South Africa
DESCRIPTION:	Gasification in Lurgi gasifiers
	Two Fischer-Tropsch synthesis units;
	1) ARGE fixed-bed unit, temp. 230°C; press. 23 atm.; catalyst, pelleted precipitated iron.
	2) Kellogg SYNTHOL process, high-velocity entrained-flow reaction using a doubly promoted iron catalyst.
SIZE:	10,000 bpd
STATUS:	in commercial production since 1956
YEARS OPERATION:	24
COAL TYPE:	Subbituminous
MAJOR PRODUCTS:	Liquid fuels, chemicals, and fuel gas.

SASOL II

LOCATION:	Secunda, South Africa
DESCRIPTION:	Gasification in Lurgi gasifiers,
	Fischer-Tropsch synthesis unit using the Kellogg SYNTHOL process
SIZE:	Nominal 40,000 bpd
STATUS:	Anticipate ready for commissioning in 1980
COAL TYPE:	Subbituminous
MAJOR PRODUCTS:	Liquid fuels (gasoline is the major product).

SOURCE: Reference 35

ejb&a

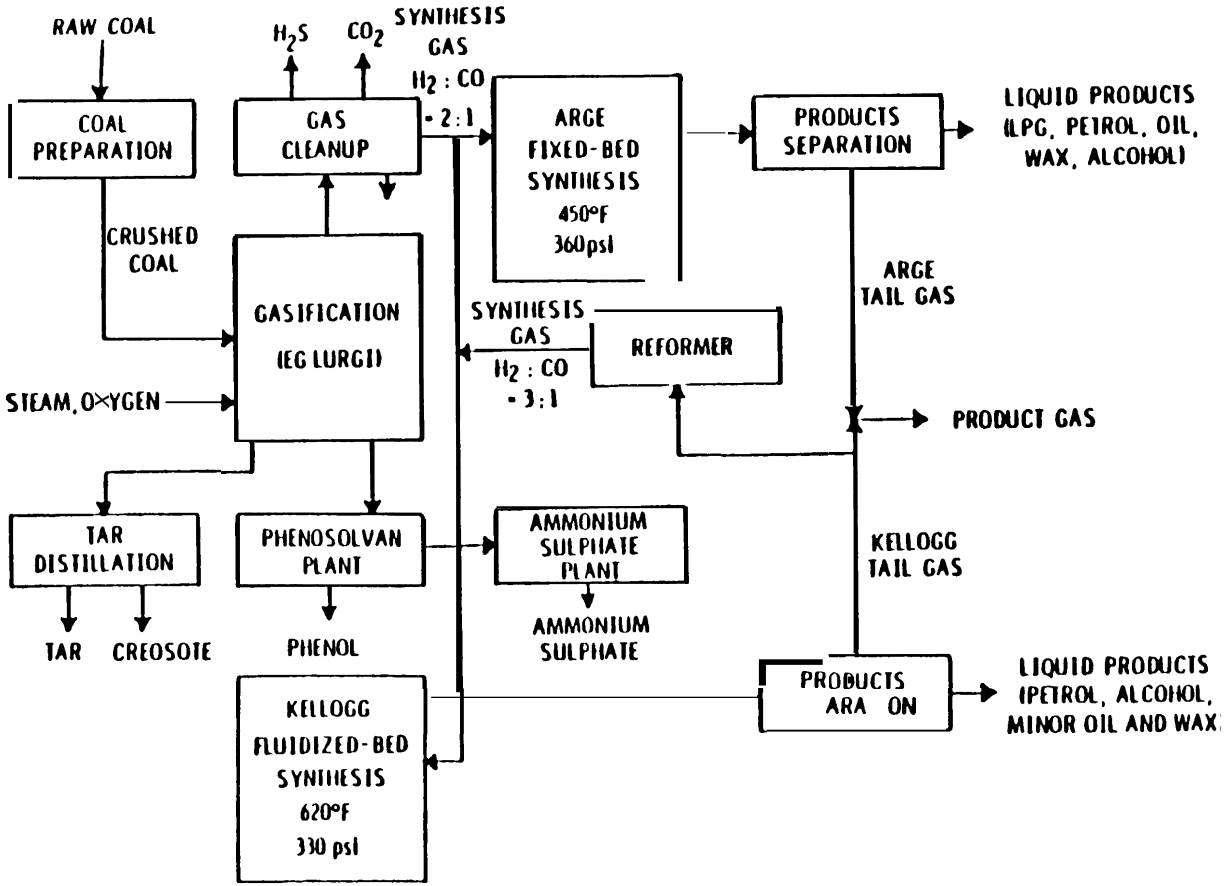

SOURCE: Reference 35

F gure 3.7

Fischer-Tropsch Synthes s

at 620%' and 330 psig, (Reference No. 35). The main products are gasoline, fuel oil fractions, and various chemical products. The gasoline has a lower octane rating than the one derived from petroleum crude. The products produced do not fit well into existing markets. However, Mobil Oil Corporation has developed catalysts that improve the quantity and quality of gasoline (Reference No. 29).

3.3.6 Methanol Process

The production of methanol from synthesis gas is a specialized application of the Fischer-Tropsch reaction. Whereas the F-T process produces liquid fuels and chemical products, the Mobil methanol process produces gasolines. The schematic outline of this process is given in Figures 3.8 and 3.9 (Reference No. 35). Table 3.8 '(Reference No. 35) presents a comparison of the thermal efficiencies of the Fischer-Tropsch and the Mobil methanol-to-gasoline process.

In the Mobil methanol liquefaction process, synthesis gas is produced from coal by any of the mediun-Btu coal-gasification processes. The synthesis gas is converted to methanol by a number of catalytic processes. The reaction is exothermic. The yield of methanol is optimized by using high pressures and low temperatures, optim um type and shape of catalysts, and of recycling of the unreacted gases.

The conversion of methanol to gasoline is a separate catalytic conversion process. The Mobil conversion process dehydrates methanol, then rearranges the carbon and hydrogen atoms. The zeolite catalysts employed in the process (called ZSM-5 class catalysts) have a unique channe The pore openings are of the right size to limit the size of the product molecules that can pass through then. the conversion proceeds to conventional high quality gasoline Reference No. 25) .

Table 3.9 (Reference NO. 25) summarizes the overall material and energy balances of the methanol-to-gasoline conversion process.

Table 3.9 (Reference No. 25) shows typical product yields produced from methanol by this conversion process.

---

5 Even though no commercial demonstration plants of the "indirect" coal-methanol-gasoline process has been built as of this date, this route is considered by many authorities to be a very promising way to get gasoline from coal. There are several proposed studies and plants under instruction in the U.S. using this process (see Appendix chart) . Also, New Zealand Liquid Fuels Trust Board (Report No. LF 5502, 10/31/79) has a large Mobil-M gasoline plant under construction (expected to become operational by 1983-5) .

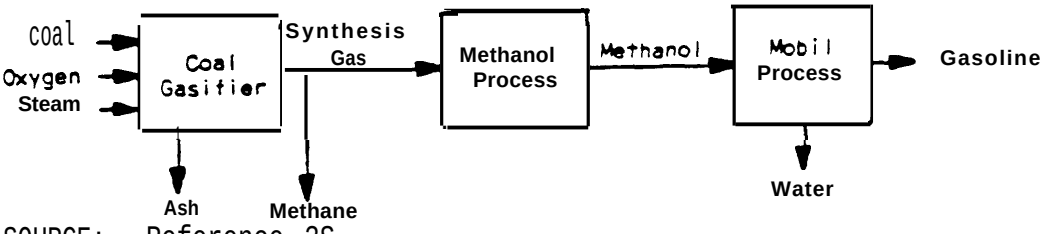

SOURCE: Reference 3S

Figure 3.8

Synthesized Gasoline From Coal

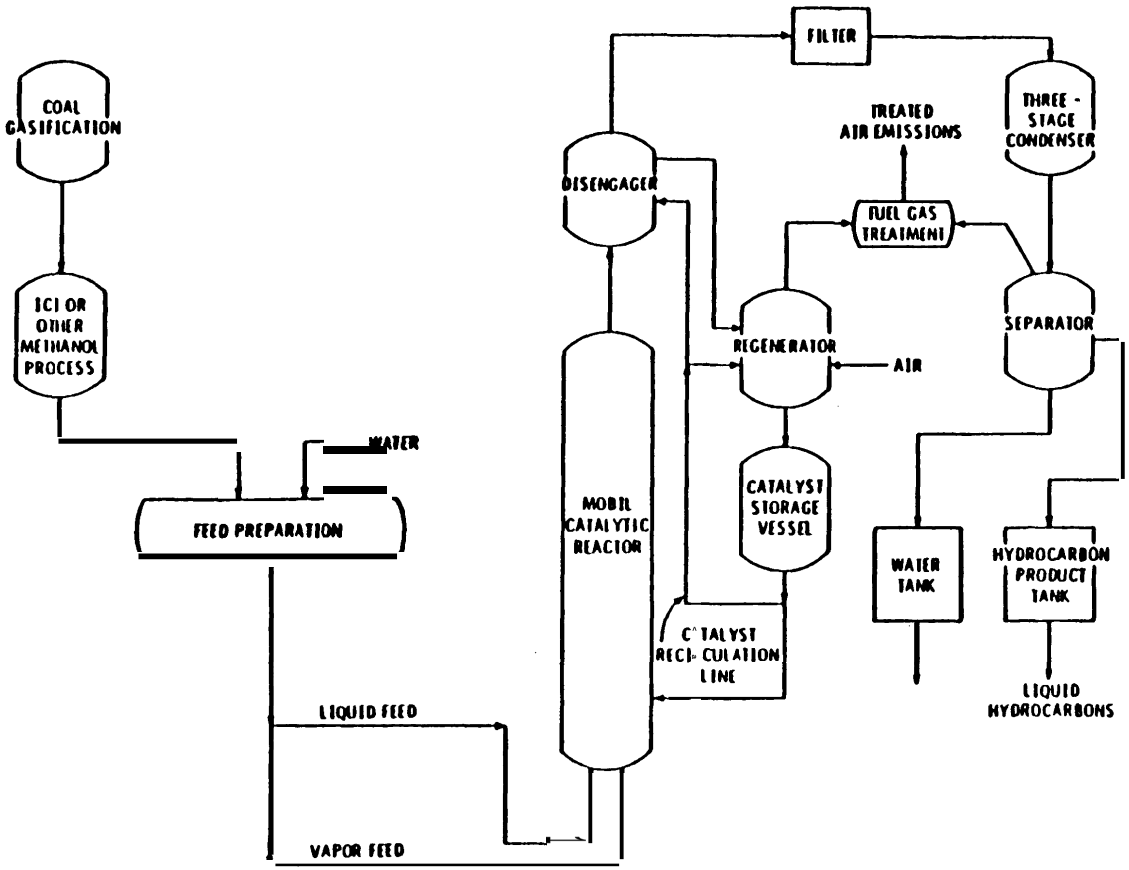

SOURCE: Reference 35

Figure 3.9

Mobil Catalytic Process

Table 3.8

Thermal Efficiencies

	Methanol-to-Gasoline[7]		Fischer-Tropsch[7]	
	Btu/hour ($1C^6$ Btu)	Percent of Input	Btu/hour (106 Btu)	Percent of Input
Input				
coal	**19,383**		19,708	
Coal Fines (excess)	**(872)**		—	
Methanol	.		3	
Total Input	18,511		19,711	
output				
SNG	6,067	32.8	7,243	36.8
C3 LPG	247	1.3	176	0.9
C_4LPG	385	2.1	26	0.1
10 RVP Gasoline	4,689	25.3	2,842	14.4
Diesel Fuel			514	2.6
Heavy Fuel Oil			147	0.7
subtotal	11,388	**61.5**	10 ,948	55.5
Alcohols			290	1.5
sulfur	19	0.1	19	0.1
Ammonia	83	**0.5**	83	0.4
Power	18	0.1	11	0.1
Total Output	11,508	62.2	11,351	57.6

6 Thermal efficiencies are highly dependent on product mix.

7 The indirect liquefaction processes shown here may be Considered as gasification processes for SNG, with the major coproduct being galosine, e.g. , for the "Fischer-Tropsch process" shown, the yield of SNG is 1.45 BOE/ton of coal, with a gasoline yield of 0.58 BOE/ton of coal. It is thus not representative of the SASOL-II process which emphasizes the production of liquid fuels.

8 Direct thermal equivalent value (thermal efficiencies are highly dependent on product mix (see Section 7. 5) .

SOURCE : Reference 35

ejb&a

TABLE 3.9

METHANOL-TO-GASOLINE BALANCES

	Methanol →	Hydrocarbons +	Water
Material Balance	100 tons	44 tons	45 tons
Energy Balance:	100 Btu	95 Btu	0 Btu

YIELDS FROM METHANOL

Average Bed Temperature, °F	775°F
Pressure, psig	25
Space Velocity (WHSV)	1.0
Yields, wt % of charge	
Methanol + Ether	0.2
Hydrocarbons	43.5
Water	56.0
CO, CO_2	0.1
Coke, Other	0.2
	100.0
Hydrocarbon products, wt %	
Light gas	5.6
Propane	5.9
Propylene	5.0
i-Butane	14.5
n-Butane	1.7
Butenes	7.3
C_5 + Gasoline	60.0
	100.0
Gasoline (including alkylates), wt, % (96 RON, 9 RVP)	88.0
LP Gas, wt %	6.4
Fuel Gas, wt %	5.6
	100.0

SOURCE: Reference 25

ejb&a

3.4 Oil Shale Retorting

3.4.1. General

Oil shale resources vary widely in their oil yields. High grade shale is normally defined as a deposit that averages 30 or more gallons of oil per ton of shale. Low grade shale averages 10 to 30 gallons per ton[8] (Reference No. 7) . Several factors determine whether or not an oil shale deposit *is recoverable.* These include oil yield (usually equal or above 20 gallons per ton) , zone thickness, overburden thickness, the presence of other materials *in the shale,* availability of needed resources such as water and services, and location relative to markets.

There are two major routes for converting oil shale to liquid or gaseous fuels. They are:

1. Conventional mining followed by surface retorting (heating) , and
2. In situ (in place) retorting

In addition, there is modified in situ. In this process, the perme ability (i.e., void volume) of oil shale deposits is increased in order to enhance the in situ retorting by removing some of the shale. The methods of rein@ or increasing the permeability of the oil shale deposits are explained in reference 8.

3.4.2. Surface Retorting

In surface retorting of oil shale, the heating takes place above ground. The shale is crushed to the right size, and fed into a retorting vessel. Heating the shale to between 800°F and 1000°'F removes abut 75 percent of the kerogen from the shale (Reference No. 8) . Different retorting precesses apply heat to the shale in different ways. Gas or non combustible solids such as sand or ceramic balls can be used as heat carriers. The vapor produced during the heat@ is condensed to form crude shale oil. It can be further upgraded and refined to produce more marketable products.

As a generic surface retorting process, TOSCO II is described. Its schematic diagram is given in Figure 3.10 (Reference No. 8).

---

[8] Shale deposits yielding less than 10 gallons of oil per ton are normally omitted from USGS resource estimates.

Raw oil shale is crushed to 1/2 inch and preheated to 500° F. It is mixed with hot ceramic balls 3/4 inch in diameter and at 1200°F in a retorting Pyrolysis drum (Reference No. 25) . About two tons of balls mix with every ton of shale. The oil shale is heated to 900°F, releasing hydrocarbon vapors from the kerogen. The spent shale and the balls pass to the sealed accumulator vessel, in which the balls are separated from the shale by a heavy duty rotating cylinder with numerous holes. The balls are lifted by a bucket elevator to the gas fired ball heater, which heats the balls to 1270°F by direct contact heat exchanger. The spent shale goes through

FIGURE 3.10

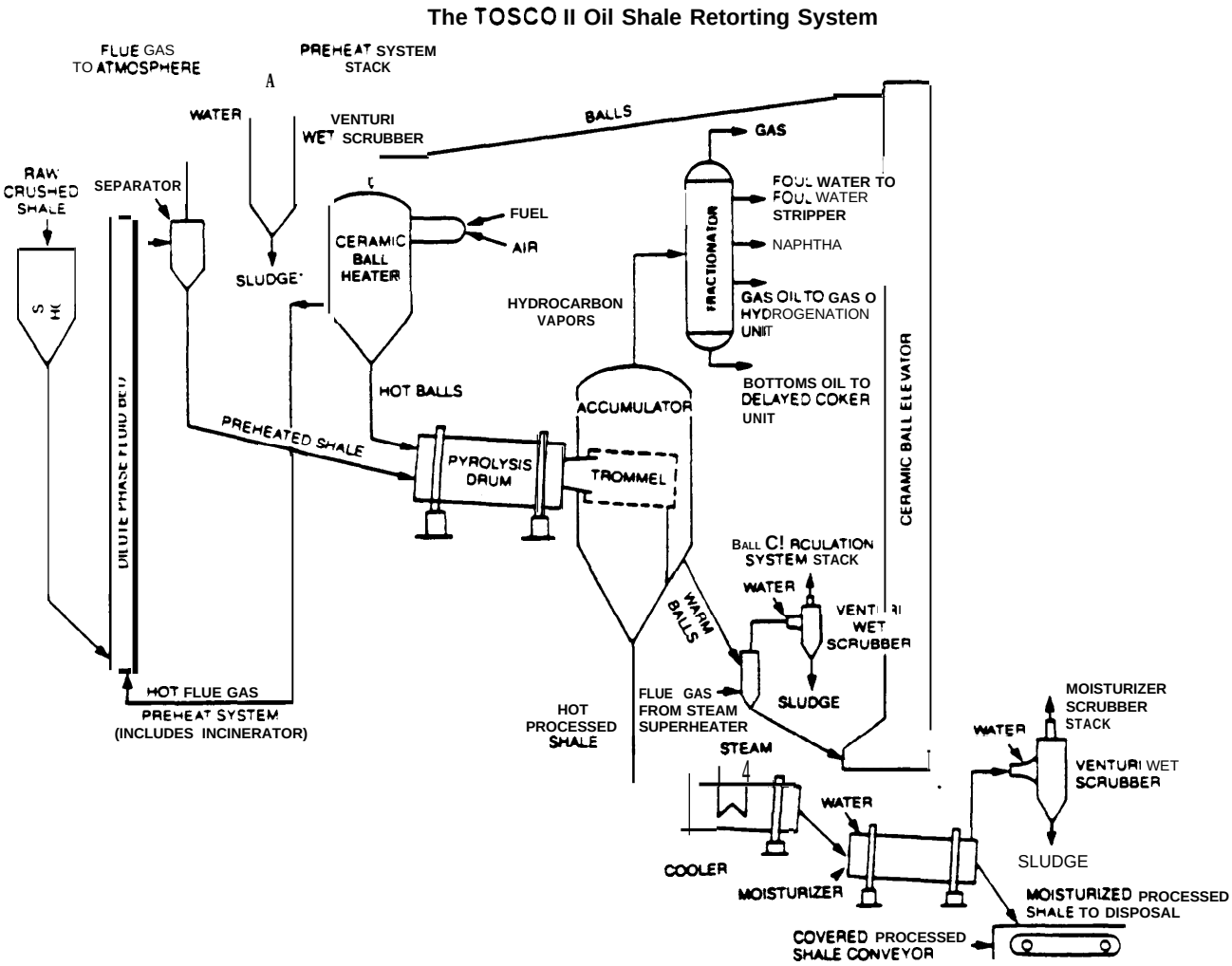

SOURCE *Oil Shale Retorting Technology* prepared for OTA by Cameron Engineers, Inc .1978

e j b &a

a special heat exchanger which cools the shale for disposal and produces steam for plant use. Then the spent shale is quenched with water and moisturized to 14 percent, a level proper for disposal.

Hot flue gas from the ball heater is used to lift raw shale to a point at which it can subsequently flow by gravity into the pyrolysis drum. The flue gas also heats the raw shale to approximately 500°F.

Table 3.10 (Reference No. 25) summarizes the basic material balance for a TOSCO II retort module.

TABLE 3.10

BASIC MATERIAL BALANCE FOR
A TOSCO II RETORT MODULE

Oil Shale	
Feed rate, TPSD	10,700
Fischer Assay, GPT	20
Pipelineable Shale Oil Product	
production rate, BPSD	4,500
Properties	
Gravity, *API	28.6
Viscosity (SSU @ 30°F)	800
Pour Point, 'F	30

Table 3.11 (Reference No. 35) summarizes the energy balance for a plant producing 47,000 barrels per day. Table 3.12 (Reference No. 17) summarizes the components, resource requirements and potential impacts of surface oil shale retorting.

Tab l e 3.11

Estimated Energy Balance For a TOSCO II Plant
producing 47,000 BPSD* Upgraded Shale Oil
From 35 Gallons Per Ton Oil Shale

	Btu/hour (lo Btu's)	Percent of Total Energy Input
Product Output		
Product oil	10.30	58.00
LPG	0.70	3.94
Diesel fuel	0.11	0.62
System Losses		
Spent shale and moisture	1.78	10.02
Residual carbon (coke)	0.93	5.24
Ammonia	0.11	0.62
Sulfur	0.06	0.34
Cooling water	1.07	6.02
Water evaporat on on shale	0.25	1.41
Losses (includ ing flue gas heat)	2.45	13.79
Energy Input	17.76	100.0
Raw shale	17.00	95.72
Steam	0.53	2.98
Electrical energy	0.23	1.30

* BPSD = barrels per stream day

SOURCE: Reference 35

ejb&a

TABLE 3-12 TOSCO II Oil Shale Retorting

ENERGY SYSTEM:

SIZE
- 50,000 bbls/day of crude shale oil
- 16.43×10^6 barrels of oil/year
- $.29 \times 10^{12}$ Btu/day
- 5.6×10^6 Btu/barrel
- operates 328.5 days/year
- total annual output 95.27×10^{12} Btu
- plant life 30 years
- plant efficiency (thermal) 64%

DESCRIPTION
- Heated ceramic balls are fed into a horizontal rotating cylindrical retort and mixed with crushed shale (1/2 inch diameter). Pyrolysis occurs at 900°F. Shale oil steam and gases are emitted from one end of the retort and are collected and fed into a fractionator for product recovery. The ceramic balls are recycled to a vertical ball heater where reheating for further use occurs.

COMPONENTS
- horizontal cylindrical retort
- fractionator and coker
- naphtha hydrofiner
- gas oil hydrofiner
- hydrogen plant
- by-product recovery

ENVIRONMENTAL CONCERNS
- air quality deterioration
- health effects due to hydrocarbons
- modifications to biological environment
- deterioration of water quality due to leachates and runoff
- solid waste disposal
- socio-economic problems due to high influx of personnel in previously sparsely populated areas

RESOURCES USED:
(Per 10^{12} Btu Produced)

FUEL[b]	
raw shale	230,000 tons
oil content	35 gallons/ton
COMPOSITION[c]	(by weight)
oil	11.8
water	1.4
spent shale	84.9
gas	2.0
LAND[1]	Acres
retorting, upgrading and offsite facilities	3.36
expansion, water containment and greenbelt	3.42
WATER[b]	Acre-Feet
cooling towers	13.8
waste heat boilers	14.5
water treatment plant	0.4
processed shale	21.3
dust control on shale ash	3.9
moisture evaporator	7.9
dust scrubbers	10.4
revegetation	1.1
fire and drinking	2.4
total	77.7
COSTS[2]	Dollars (1978)
construction	
manpower	1,640,000
materials	671,000
equipment	1,655,000
other cost	337,000
total	4,303,000
operation & maintenance	NA
PERSONNEL	Workers
construction	2.1
operation & maintenance	11.5

RESIDUALS AND PRODUCTS:
(Per 10^{12} Produced)

AIR POLLUTANTS[b]	Tons
particulates	10.6
SO_2	11.4
NO_x	63.3
hydrocarbons	11.2
CO	2.3
WATER POLLUTANTS	
assume zero direct discharge to any water-course	
SOLID WASTE[b]	Tons
spent shale	190,000
ENERGY PRODUCT[b]	Barrels
refined shale oil	172,600 barrels
heat content	5.6×10^6 Btu/barrel

(1) Land use value represents land committed to use for the facility, divided by annual production, measured in trillion Btu.
(2) Costs are total costs for plant construction, divided by annual output, measured in trillion Btu.

SOURCES: (a) Environmental Protection Agency, Monitoring Environmental Impacts of the Coal and Oil Shale Industries, 600/7-77-015, February 1977.
(b) University of Denver, Denver Research Institute. An Engineering Analysis Report on the TOSCO II Shale Process, March 1977.
(c) University of Oklahoma, Energy Alternatives: A Comparative Analysis, 1975.
(d) Bechtel Corporation, Energy Supply Planning Model, 1978.
(e) Cameron Engineers Incorporated, Synthetic Fuels Handbook, 1975.

SOURCE: Reference 17

ejb &a

3.4.3 Modified In Situ Retorting

Occidental modified in situ oil shale retorting process is selected as representative. It involves the mining out of about 10 to 25 percent of the shale deposit. This mined portion would presumably be retorted by one of the surface retorting processes, or if its oil content is too low, will be treated as waste (Reference No. 37).

Figure 3.11 (Reference No. 8) represents in schematic form a generic modified in situ oil shale retorting process. 'Figure 3.12 (Reference No. 37) is a more detailed description of the Occidental modified in situ retorting process. As observed in Figure 3.12 , in steps A or the pre-detonation phase, drifts (chambers) are excavated at the top and bottom of the shale deposit, which is about 300 feet-thick. An interconnecting shaft is dug to connect the drifts. Rooms with a volume of about 15 to 20 percent of the eventual volume of the planned chamber are then mined. Shot holes are drilled to allow blasting of the shale oil to produce the desired fragmentation.

In the burn phase, the explosives in the shot holes are detonated. A rubble-filled chamber is created which can function as a batch retort. The percentage of void space and the particle size distribution of the rubble are a function of the explosive loading. Connections are made to air/gas recycle and air supply compressors. An outside heat source (e.g., off gas or oil from other retorts) is used for heating the rubble at the top of the retort. Oil shale and hydrocarbon gases are produced which move downward. Residual carbon is left on the spent shale.

The retorting reaction is terminated after a predetermined amount of the rubble has been retorted by halting the external heating supply. The residual carbon is utilized to continue the combusion process, which now does not need external heating. The flame front moves downwards, preceded by the liquid and gaseous products retorted from the shale by the hot, oxygen-deficient combusion gases. The liquid hydrocarbons collect in a sump, from which they are pumped to the surface. The gaseous by-products are used partially, with steam, as a recycle stream to control the oxygen content of the inlet gas. The four distinct zones that develop during the retorting are shown in Figure 3.11 .

Table 3.13 (Reference No. 17) summarizes the components, resource requirements, and potential impacts of modified in situ retorting.

Figure 3.11: **Modified in Situ Retorting**

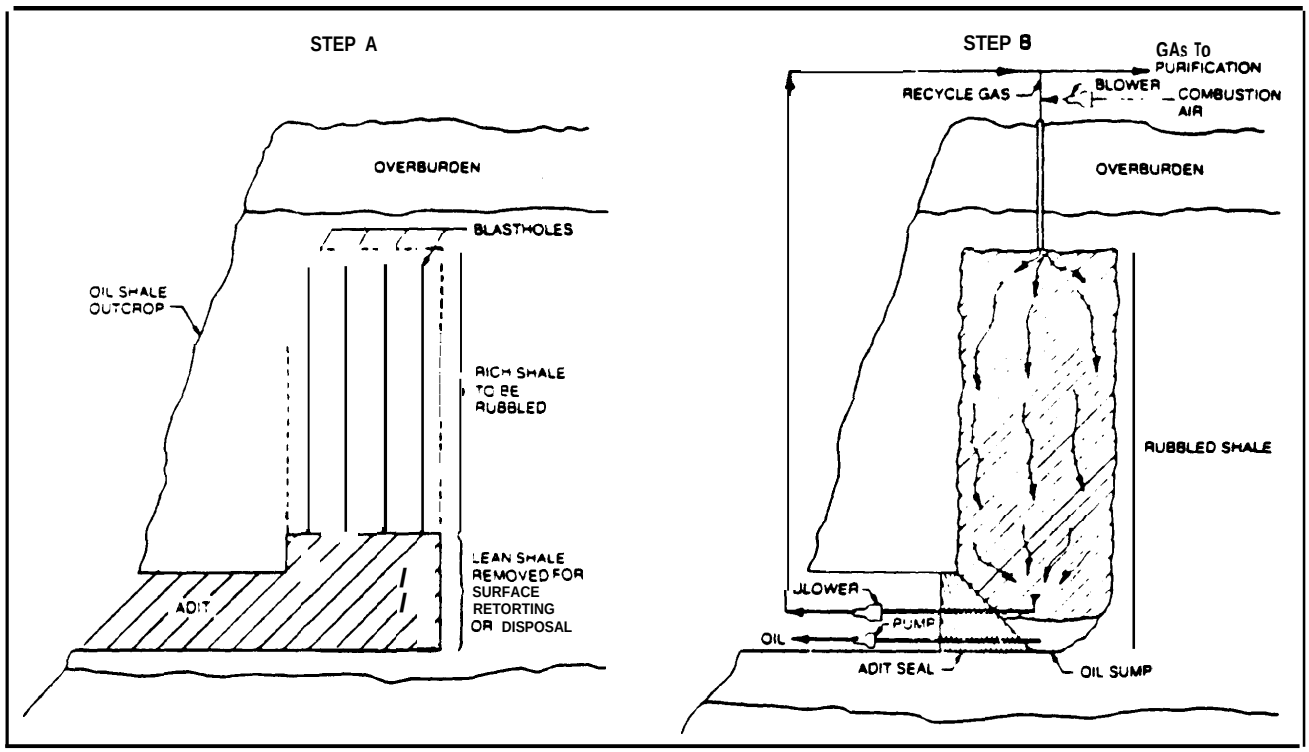

SOURCE: T. A. Slader, "Recent Trends in Oil Shale — Part 2. Mining and Shale Oil Extraction Processes," *Mineral Industries Bulletin*, vol. 18, No. 1, January 1975, p. 18

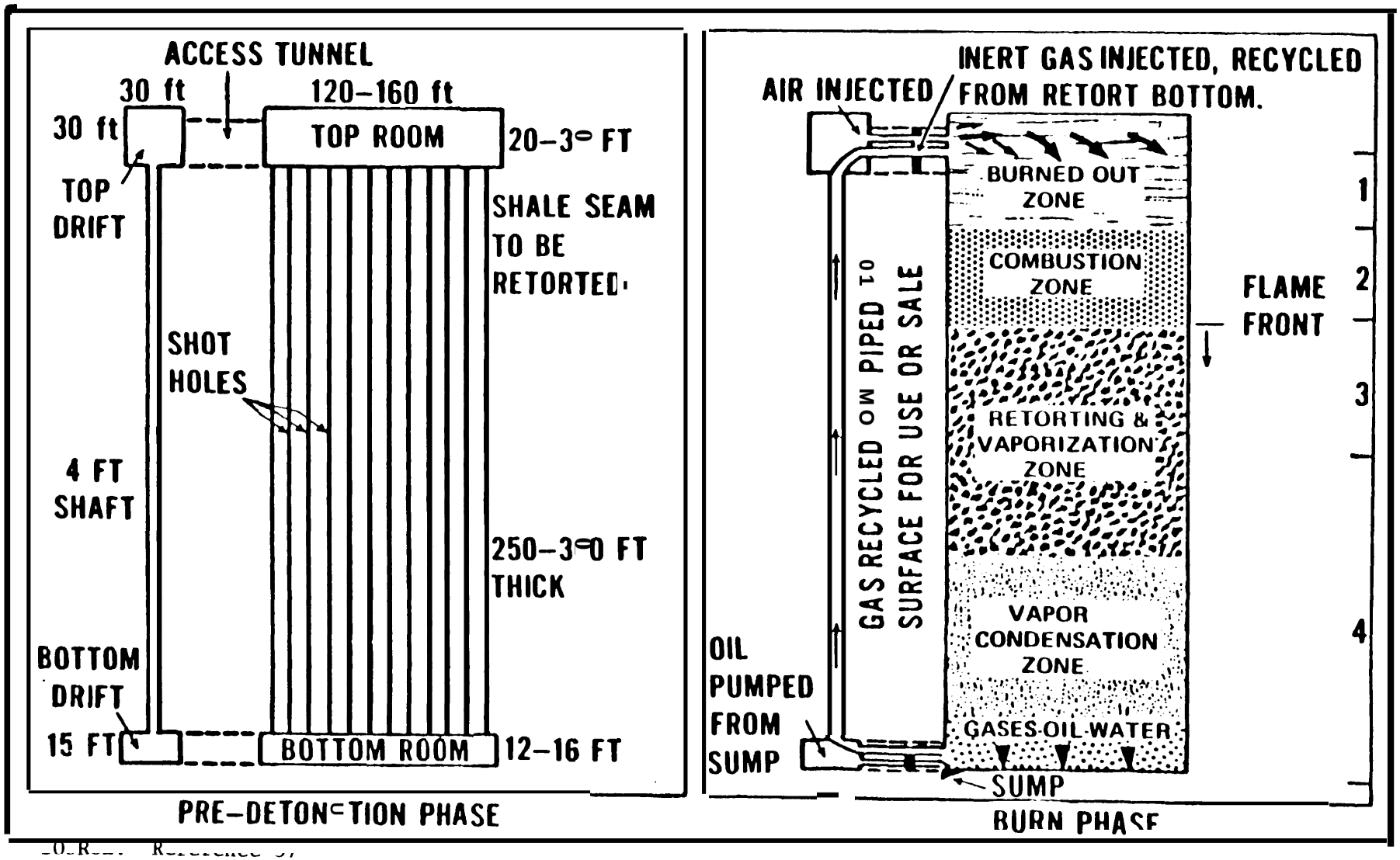

Figure 3.12: Occidental Modified In Situ Retorting

TABLE 3.13 **Modified In-Situ Shale Retorting (Occidental)**

ENERGY SYSTEM:

SIZE
- 34,200 tons of raw shale mined/day[d]
- 102,600 tons of raw shale retorted in-situ/day[c]
- shale oil content 25 gallons/ton[d]
- 50,000 bbl/day
- .29 x 10^{12} Btu/day
- 95.3 x 10^{12} Btu/year
- operates 328.5 days/year
- plant life 30 years
- thermal efficiency 61% overall[d]

DESCRIPTION
- In modified in-situ approximately 15-20% of the deposit is mined using conventional mining techniques in the ground and fractured using either chemical, hydraulic, or electric means. Prior to fracturing of the deposit, parallel wells (productions and injection) are drilled on two opposing sides of the deposit. A retorting fluid (hot steam or gas) is injected within the formation. After ignition, retorting takes place and the oil mist, gas and steam produced are forced to the surface through the production wells. Liquid gathered at the base of the combustion zone is later pumped out. The products are refined using techniques similar to surface refining.

COMPONENTS
- underground retort created from blasting procedure
- fractionator and coker
- naphtha hydrofiner
- gas oil hydrofiner
- hydrogen plant
- by-product

ENVIRONMENTAL CONCERNS
- air quality deterioration
- health effects due to hydrocarbons
- modifications to biological environment
- deterioration of water quality due to leachates and runoff
- solid waste disposal
- socio-economic problems due to high influx of personnel in previously sparsely populated areas

RESOURCES USED:
(Per 10^{12} Btu Produced)

FUEL[c,d]	
mined shale	117,900 tons
unmined shale	353,800 tons
oil content	25 gallons/ton

COMPOSITION[a]	(by weight)
organic material	NA
water	NA
inorganic material	NA
spent shale	NA

LAND[c]	Acres
permanent disposal	207-310/Year
surface facilities	345
active well area	862/Year

WATER[c]	Acre-Ft.
retorting and upgrading	(22.2)*
power generation	24.6
revegetation	0.9
steam injection	28.9
miscellaneous	4.4
total	58.4

COSTS[b]	Dollars (1978)
construction	13,400,000
operation & maintenance	NA

PERSONNEL[b]	Workers
construction	30.6
operation & maintenance	NA

RESIDUALS AND PRODUCTS:
(Per 10^{12} Btu Produced)

AIR POLLUTANTS[d,e]	Tons
particulates	39.6
SO_2	6.21
NO_2	33.7
hydrocarbons	0.51
CO	10.8

WATER POLLUTANTS
There is assumed a zero direct discharge of effluent into any water course.

SOLID WASTE[d]	Tons
spent shale	99,000

ENERGY PRODUCT	Barrels
refined shale oil	172,400

*Approximately one barrel of water/barrel of oil is produced during retorting by the release of interstitial water and the combustion of hydrocarbons.

SOURCES: (a) Cameron Engineers, Incorporated, Synthetic Fuels Handbook, 1975.
(b) BESS Data Group, Environmental Characterizations for Energy Technologies and End Uses, Revision b, 1978.
(c) Department of Energy, Draft Environmental Impact Statement for the (updated) Prototype Oil Shale Leasing Program, 1979.
(d) Environmental Protection Agency, A Preliminary Assessment of the Environmental Impacts from Oil Shale Development, 600/7-77-060, July 1977.
(e) Ashland Oil, Inc., Lessee & Occidental Oil Shale, Inc., Modifications to Detailed Development Plan, Oil Shale Tract C-b, February, 1977.

SOURCE: Reference 17

3.5 comparison of the Various Synfuel Systems With Respect to Resource Requirements[10]

In order to estimate the resource requirements of the coal and oil shale fuel cycles we need first to assess their energy utilization efficiencies. These are summarized in Table 3.14.

The *resource* requirements of coal and oil shale energy systems per 10^6 Btu of product delivered to end user are given in Tables 3.15 and 3.16. Tables 3.17 and 3.18 convert these requirements to energy systems producing 50,000 barrels of oil equivalent per day.

Manpower requirements for operating and maintenance labor of coal conversion plants are given in Reference 29.

They are:

Plant operators	
Operating supervisors	
Maintenance labor	
Maintenance labor supervisors	30
Administration	30
Total	355

These manpower requirements are for a basic (ESCOE) coal conversion plant that consumes 25,000 tons of coal per day with 22.4 million Btu/ton and produces 50,000 bbl/day liquids output.

Very considerable variations exist in the literature in respect to manpower requirements for the other phases of the fuel cycle. They depend on such variables as methods of mining, location of mine, kind of transportation system and extent of beneficiation. A table indicating the ranges of variables is given in the footnote in respect to the conversion plants.

---

10 Limitations of Data Sources: Evaluations carried out in this report are often sub ject to great uncertai" nties because:

(1) The information available is only of preliminary nature. There are no full scale operating synfuel plants in the U.S. (subject to U.S. siting considerations) , so that data needs to be extrapolated from pilot plants with many uncertainties of scale and dissimilarities associated with the extrapolation, as well as specific siting and f eedstock characteristics discussed below.

10 (cent'd)

(2) There are variations among sources which are often due to different assumptions or local influences. Changes in design account for some differences as the technology changes and the environmental regulations change. Many of the assumptions are not stated - or even referenced. Budget and time limitations, however, nessitate the need to use exist& data bases, rather than the development of new data.

Even estimating the range of uncertainties is often a value judgement process , unless more extensive on-site interviewing with site and process specific sources of information are developed.

Table 3. 4 Resource Utilization Efficiencies of Generic Synthetic Fuel Energy Systems

(In Percent)

	1	2	3	4	5	6
	Coal Gasification		Coal Liquefaction		Oil Shale Retorting	
	Medium-Btu	High-Btu	Direct	Indirect	Surface	Modified in Situ
Beneficiation[a]	≡6.4-97.3	96.4-97.3	96.4-97.3	96.4-97.3	96.4-97.3	100
Transportation to Conversion Plant[b]	98.5	≡8.5	98.5	98.5	99.5	100
Conversion to Fuel[c]	83	59	64-70	48-57	67	61
Upgrading and Refining[d]	N.A.[e]	N.A.[e]	75-95[f]	95-100[f]	77[g]	77[g]
Distribution to End User	96.9[h]	97.1[i]	98.8[j]	98.8[j]	98.8[j]	98.8[j]
Overall Energy Efficiencies	76.4-79.2	54.4-54.9	45.0-63.0	42.8-54.0	48.9-49.3	46.4

SOURCE: E. J. Bentz & Associates

Notes for Table 3.14

a. Estimates of losses of coal and oil shale from beneficiation (in terms of Btu's) vary broadly among authors, depending on the assumed degree of upgrading and the kind of coal or oil shale used. Estimates vary from 0% (Reference 37a) ; 2.7-3.6% (Reference 7) ; and 12.5% for intensive beneficiation (Reference No. 17) .

b. Average value of losses are 1.5% (time from Reference No. 7) . In the case of oil shale, where distances are shorter, 0 .5% is assumed.

c. The @et efficiencies (rather than the process efficiencies) were used. The efficiencies for coal conversion processes are derived from Roger and Hill. (Reference 29) . In the case of H-Coal, the syncrude efficiency was used. In the case of oil shale retorting processes, the efficiencyes are derived from DOE (Reference No. 17) .

d. Data on efficiencies of upgrading and refining syncrudes is very limited and unreliable (see Section 1.7) .

e. N.A. means not applicable.

f. Overall yields for SRC II of finished fuels range between 83 and 98 liquid volume percent of SRC II syncrude, depending on the product slate and how refinery fuel and hydrogen plant feed are supplied. An average of the net product yields ranging between 88 and 91 was assumed (Reference No. 22) . However, these values apparently do not include coal use for the production of hydrogen needs for the upgrading process. If coal-derived hydrogen is to be used (as against hydrogen from nuclear fission or from biosynthesis) , then the upgrading and refining efficiencies for coal conversion products become 75 percent. However, in some cases it may be expected that all of the hydrogen and energy required for the Upgrading/refining process would be obtained from residuals, higher boiler fractions, and methane produced in the process or plant refinery(which may include the use of Petroleum derived vacuum . In the case of indirect liquefaction Processes, all the needed hydrogen is accounted for in the gasifier, and higher upgrading efficiencies can be achieved, depending on product slate .

g. Derived from Reference 26a. However, MIS oil is easier to upgrade, so that higher efficiency may be in order.

h. Derived from Reference 17.

i. Derived from Reference 7.

j. Derived from Reference 7 and 10.

ejb&a

Table 3.15 Fossil Carbon Consumption of Generic Synthetic Fuel Energy Systems (In 10^{-3} ton of fossil carbon/10^6 Btu fuel delivered to end user)

	1	2	3	4	5	6
	Coal Gasification		Coal Liquefaction		Oil Shale Retorting	
	Medium-Btu	High-Btu	Direct	Indirect	Surface	Modified in Situ
Beneficiation	1.2-1.6	1.7-2.2	2.0-2.7	2.1-2.8	0.9-1.2	⊙
Transportation to Conversion Plant	0.7	0.9	1.1	1.2	0.2	⊙
Conversion to Fuel	0.7	25.1	22.2-26.7	33.5-40.5	11.4	18.7
Upgrading and Refining	⊢	-	3.7-18.5	0-3.9	7.9	11.0
Distribution to End User	1.4	1.8	0.9	0.9	0.4	0.6
⊙verall Consumption	9.1-10.3	27.6-27.9	27.4-40.7	35.8-44.⋈	17.5-17.6	25.7

SOURCE: E. J. Bentz & Associates

Notes to Table 3.15

a This table summnarizes the consumption of fossil carbon contained in the feedstocks or products during the various phases of the various synfuel cycles.

b The numbers in the table are based on the following assumptions:

(i) The resource utilization efficiencies are those developed in Table 3.14.

(ii) The carbon content of bitumimous coal averages 87.8%, lignites - 72. 5% and sub-bituminous~ reals - 73. 5%. The carbon content of the kerogen (i. e., crude shale oil) averages 80. 5%. (Ref. 26b) . For convenience, an average figure of 80% for the carbon content of coals and kerogen is used.

(iii) The loss in fossil carbon is directly proportional to the loss in coal or kerogen.

(iv) The Btu content of a ton of coal is 24×10^6 Btu and of ton crude shale oil is 36×10^6 Btu.

c A sample calculation for medium Btu coal gasification is as follows:

A ton of feedstock bituminous coal has 24×10^6 Btu, of which 18.34×10^6 to 19.0×10^6 Btu is delivered to the end users (74.4 to 79. 2% overall energy efficiency - see Table 3.14) . Since a ton of feedstock coal. has 80% fossil carbon content, and 20.8% to 23.6% of it is consumed during the medium Btu coal gasification fuel cycle, (see Table 3.14) , the total fossil carbon consumption o the cycle is between 0.1664-0.1888 tons per 18.34×10 to 19. 0×10^7 Btu delivered to end users. This translated to 0.009 to 0.010 tons of fossil carbon per 10^6 Btu.

ejb&a

Table 3.16 Water Consumption of Synthetic Fuel Energy Systems (Generic (In gallons per 10^6 Btu product delivered to end user)

	1	2	3	4	5	6
	Coal Gasification		Coal Liquefaction		Oil Shale Retorting	
	Medium-Btu	High-Btu	Direct	Indirect	Surface	Modified in Situ
Mining[a,b]	0.6-0.9	0.6-0.9	0.6-0.9	0.6-0.9	0.7-1.1	0.7-1.1
Beneficiation[c]	1.2	1.2	1.2	1.2	0	0
Transportation to Conversion Plant	0	0	0	0	0	0
Conversion Fuel[d]	13-24	13-24	7-26	13-26	9-32	9-13
Upgrading and Refining[e]	0	0	–	–	24	24
Distribution to End User	0	0	0	0	0	0

SOURCE: E. J. Bentz & Associates

Notes to Table 3.16

a The water required for mining and preparation of the coal or shale and for the disposal of ash or spent shale is a function of location, mainly through the amount of material that must be mined or disposed; and the degree of attested surface reclamation. Assuminq 2/3 of coal is surface-mined and 1/3 is undergroundd mined, water consumption for surface mining ranges between 0.55 and 0.98 gallons per 10^6 Btu of product, and for underground mining - 0.75 gallons per 10^6 Btu of Product (Reference No. 17) .

b Assume 2/3 of oil shale is surface mined and 1/3 is underqround mined. Water consumption or both kinds of operations range between 0.7 and 1.1 gallons per 10^6 Btu of product (Reference No. 17).

c Consumption of 1.2 gallons of water 10^6 Btu Of product is assuned for beneficiation of coal (Reference No. 17) and none for shale oil.

d Consumption of water for the conversion of feedstock to fuels depends principally on the overall plant conversion efficiency, degree of water recycling, and the water content of the coal or shale. Consumption figures range from 13-24 gallons per 106 Btu of product for coal gasification; 7-26 for direct coal liquefaction; 13-26 for indirect coal liquefaction; 9-32 for surface shale retorting; and 9-13 for modified in situ shale retorting (Derived from References 17, 37b,c) .

e Water consumption for upgrading and refining is not available in the literature. The estimates presented for shale oil upgrading are based on private conversation with Mr. Bobby Hall and Ray Young of the American Petroleum Institute 3/81. For shale oil - 100 gallons per barrel are needed to make the raw shale oil suitable for pumping, and 40 more gallons per barrel to convert it to transportation fuels. Polling of a large number of oil companies and API experts did not result in water consumption estimates for upgrading of coal liquids (name1y: Robert Howell, Bonner and Moore, Fred Wilson Texaco, Patton, Nanny, Hall and Young of API - 3/81) .

ejb&a

Table 3.17* Annual Feedstock Requirements for Generic Synthetic Fuel Energy Systems Producing 50,000 bbl Oil Equivalent per Day to End User (In millions of tons or barrels of oil)

	Coal Gasification		Coal Liquefaction		Oil Shale Retorting	
	Medium-Btu	High-Btu	Direct	Indirect	Surface	Modified in Situ
Mining[5]	5.6-5.8	8.0-8.1	7.0-9.8	8.2-10.3	62.2-62.7	N.A.[7]
Beneficiation[5]	5.4-5.6	7.8	6.8-9.4	7.9-9.9	60.5-60.6	N.A.[7]
Transportation to Conversion Plant[5]	5.3-5.5	7.7	6.7-9.3	7.8-9.8	60.2-60.3	N.A.[7]
Conversion to Fuel[6]	18.9	18.8	19.4-24.6	18.5-19.4	24.0	24.0
Upgrading and Refining[6]	18.8	18.8	18.5	18.5	18.5	18.5
Distribution to End User[6]	18.3	18.3	18.3	18.3	18.3	18.3

* These are the quantities of coal, shale or equivalent oil leaving the indicated phase of the fuel cycle.

SOURCE: E. J. Bentz & Associates

e jb&a

Notes to Table 3.17

1. Same assumptions and references as those in Table 3.14.
2. Oil has energy content of 5.8 x 10^6 Btu/barrel.
3. Coal has energy content of 24 x 10^6 Btu/ton.
4. Oil shale has energy content of 3.45 x 10^6 Btu/ton (based on 25 gallons of oil per ton) .
5. Tons of coal or shale.
6. Barrels of oil equivalent.
7. N.A. is not applicable.

Table 3.18* Annual Water Consumption of Generic Synthetic Fuel Energy Systems Producing 50,000 bbl Oil Equivalent per Day to End User (In million gallons per year)

	Coal Gasification		Coal Liquefaction		Oil Shale Retorting	
	Medium-Btu	High-Btu	Direct	Indirect	Surface	Modified in Situ
Mining	64-95	64-95	64-95	64-95	74-120	74-120
Benef iciation	130	130	130	130	0	0
Transportation to Conversion Plant	0	0	0	0	0	0
Conversion to Fuel	1400-2500	1400-2500	740-2800	1400-2800	950-3400	950-1400
Upgrading and refining	0	0			2500	2500
Distribution to End User	0	0	0	0	0	0

* Sam assumptions and references as in Table 3.16.

SOURCE: E. J. Bentz &Associates

Table 1 Footnote to Chapter 3: Manpower Requirements of Generic Synfuel Plants Producing 50,000 Barrels of Oil Equivalent per Day

	1 Coal Gasification	2 Coal Liquefaction	3 Oil Shale Retorting	4
	Medium-Btu-High-Btu	Direct & Indirect	Surface	Modified in Situ
Peak Construction (men)	1,500-4,800[a]	2,200-8,000[b]	330[d]	4,900[d]
Construction (man-years)	3,400 - 10,800[a]	7,500-25,000[b]	1100[d]	16,000[d]
Operation and Maintenance (men)	320-500[a]	355-3800[c]	1200[d]	-

[a] DOE, 1980, Comparative Assessment of Health ahd Safety Impacts of Coal Use. DOE/EV 0069.

[b] The lower value is derived from DOE/EV 0069; the upper value - from Reference 34.

[c] The lower value is derived from Reference 29 ; the upper value - from Reference 34.

[d] Derived from Reference 17 and assuming 5 year construction of plant peaking at 30% of the man-years labor requirements (Reference 34).

SOURCE: E. J. Bentz & Associates

CHAPTER 4 : SYNTHETIC FUEL PROCESSES CONVERSION COST AND PRODUCT ECONOMICS

Section No.		Page
4.1	Conversion Costs and Product Economics	4-1
4.2	Scale of Production	4-7
4.3	Product Quality	4-8
4.4	Estimating Methods.	4-11
4.5	Product Upgrading	4-22
4.6	Refining synthetic Liquids.	4-28
4-7	Transportation and Other Infra-structure Costs	4-36
4-8	Addendum to Chapter 4: Basis for Cost Assumptions	
	1. Basic Conversion Plant.	4-43
	2. Assumptions of Product Upgrading	4-44
	3. Refining Cost Assumptions	4-46

4.1 CONVERSION COSTS AND PRODUCT ECONOMICS

The following evaluation of a wide range of alternate fuels produced from coal attempts to build upon prior work in the field that has, successively, estimated the plant construction and operating costs for each process, standardized the bases of estimation (time of construction, size of plant, location, financing methods, etc.) and evaluated the quality of product produced.

Such work has been sponsored by the Department of Energy since the early 1970's. The most recent work was performed by the Engineering Societies Commission on Energy, Inc. (ESCOE).[1] That work collected prior analyses performed for DOE and others, made adjustments in each to account for differing assumptions regarding input prices, plant scale, financing methods and costs, and thus reevaluated them on a more common basis. The differences in product quality were factored for value based on current price relationship among natural petroleum products.

Our approach will differ in several regards:

First of all we shall use the baseline ESCOE plant models, capital costs and operating cost relationships, updated to a uniform 1980 dollar basis.

Second we shall scale all plants to a common output plant size[2] in order to retain comparability at other, downstream stages of processing and use.

Third we shall deal with differences in product quality directly, and on a cost of product basis, by considering the additional costs required to upgrade lower quality products and make them comparable with the higher grade synfuels.

Fourth we shall then examine the methods and costs of further processing and transporting the generic synfuel products to make them available to end use markets.[3]

The ESCOE capital estimates were all adjusted to a 1980 dollar basis by the use of the Wholesale Price Index - Industrial Commodities Index. Others have frequently used the Chemical Engineering Plant Index, however we feel that no significant historical difference exists and the WPI Index basis is a more suitable bench mark for further forecasting since it is a component

[1] Coal Conversion Comparison, ESCOE Report FE-2468-51, July, 1979.

[2] ESCOE scaled all plants to a common input size in order to simplify the costs - auxiliaries and off-sites are normalized.

[3] We did not examine differences in end use efficiency that exist or are possible. This should be subsequently examined.

of Us. macro-economic forecasting models and the Chemical Construction Index is not.

Exhibit 4-1 displays the original capital cost estimates of ESCOE. Exhibit 4-2 updates these estimates to a uniform 1980 cost basis.

Operating costs are more complex. The major cost categories are:

- Coal
- Utilities
  - Water
  - Power
- Catalysts and Chemicals
- Labor
- Overhead
- Maintenance

Coal prices are uniform to all processes - as are assumed costs of water, power and labor. The costs of overhead are a uniform fraction of operating and maintenance labor - they include administrative personnel costs as well as G&A expenses. The maintenance rule is made uniform among systems-although differences should exist on the basis of system approach.

The original ESCOE operating cost variables are shown on Exhibit 4-3. These unit prices provide the bases for updating the ESCOE costs to the values shown on Exhibit 4-4.[4]

The cost of producing hydrogen for product upgrading is partially imbedded in other estimates. The uniform condition is that hydrogen is demanded at a greater level then could be supplied from excess char, residue, or filtrate from the process plant. Therefore a hydrogen plant must be built at the upgrading plant site. This plant is designed to reform synthesis gas.[5] The cost of hydrogen can then be based on the hydrogen plant's costs - including syngas feed at the estimated syngas product costs of our companion syngas plant. Alternately we could capitalize a coal gasification plant in this area, however that seems to be an even more unrealistic mode of system optimization.

In the long run, as product slate demand for synthetic coal liquids becomes clarified, the optimization of an integrated coal-to-product plant can be designed in a much more sophisticated manner.

[4] The input costs were in certain instances drawn from original sources cited by ESCOE.

[5] Or reform synthetic fuel product - the cost is comparable $6.25 - 6.75/MM BTU.

EXHIBIT 4-1

PLANT CAPITAL REQUIREMENTS
MAJOR ON-SITE PLANT COST IN MILLIONS OF MID 1978 $

Category Process	SRC-II	EDS	H-FO	H-Syn	FT	M	Lur.	West. Syn.
Coal Preparation	63	63	84	84	63	63	90	63
H_2 or Gasification	253	190	138	158	228	228	143	22
O_2 Plant	129	-	67	87	117	175	114	80
Gas Shift	〃	-	30	35	-	40	30	〃
Acid Gas and Sulfur Plants	60	60	57	57	57	57	136	57
Reactor Section	195	180	140	210	55	106	90	-
Conversion	-	-	-	-	100	75	20	42
Gas Plant	30	-	30	25	25	10	12	-
Flexicoker	-	160	-	-	-	-	-	-
Pollution Systems	44	44	40	40	40	40	55	24
Solvent Hydro. or Catalyst Prep.	-	82	-	-	3	-	-	-
Compression	-	〃	〃	〃	〃	-	20	-
Total less Int. Including Indirects	1262	1270	955	1134	1121	1212	1151	684

Notes: 1. M includes HF Alkylation.
2. Some EDS cost included in Flexicoker.
3. All costs shown above are considered bare cost and have not been confirmed with process developer.

SOURCE: E. J. Bentz & Associates

EXHIBIT 4-2

TOTAL CONVERSION PLANT INVESTMENT - 50,000 BBL LIQUIDS/DAY PLANT BASIS

(Million 1980 Dollars)

Coal Liquids	ESCOE Basis 1978 $	ESCOE Basis[1] 1980 $	50,000 BBL/ Day Output Basis	Capital Cost/ Daily BBL	Total BTU E14/Yr.	Capital Cost/ MM BTU/ Yr.	Reference: Tons of Coal/Day
Direct Liquefaction							
SRC-II	$1,262.	$1,565.	1310.8	$26,210	1.081	$12.13	20,938
EDS	1,279.	1,574.	1422	28,440	1.072	13.26	22,584
H-Coal Syn. Oil	1,134.	1,407.	1252	25,040	1.115	11.23	22,242
H-Coal F.O.	955.	1,185.	980.9	19,620	1.048	9.36	20,695
Indirect Liquefaction							
Fischer/Tropsch	1,121.	1,391.	1730	34,600	1.112	15.56	31,095
Mobil 'M'	1,212.	1,676.	1396.4	27,930	8016	17.42	20,833
Methanol	1,195.	1,482.	608.4	12,170	428	14.20	10,263
Methanol/SNG	1,587.	2,225.[2]	2132.9	42,650	905	23.57	26,174
Coal Gasses							
High BTU Lurgi	1,151.	1,427.	1313.1	(26,260)[3]	1.067[3]	12.30	23,000
Low BTU Westinghouse	684.	851.	889.5	(11,790)[3]	1.067[3]	5.58	17,313
Shale Oil Surf. Retort.	700.[4]	798.	798.	15,960	.953[5]	11.93	N.A.

[1] ESCOE - 25,000 tons coal/day input basis revised to reflect 20% contingency vs. 10% and 1980 dollars.

[2] Mobil Research Center Basis - $ 1977 - 27,300 ton coal input revised $ 1980 and 1.73% markup of plant.

[3] Evaluated at average heating value of coal l quids 6.5 MM/BTU/bbl. x 50,000 bbl./day = 325 billion BTU/day (1.067 E14 BTU /yr.)

[4] OTA Basis - 3rd quarter 1979, 50,000 bbl. basis.

[5] Evaluated at average daily value of 5.8 MM/BTU/bbl.

SOURCE: E. J. Bentz & Associates

EXHIBIT 4-3

COST DATA
ESCOE)

Process	Capital C	OPERATING & MAINTENANCE COST					Total M 2
		Fuel 1	Catalyst & Chem. 2a	Labor 2b	Maintenance 2c	Local Tax & Ins. 2d	
SRC-I	1092	246.	3.0	13.8	33.	55.	104.8
SRC-II	1262	246.	6.0	12.2	38.2	53.	119.0
EDS	1270	246.	6.0	12.2	38.5	64.	121.0
H Coal: Fuel Oil	955	246.	6.0	12.2	29.	48.	95.0
Syncrude	1134	246.	7.0	12.2	34.3	57.	111.0
FT	1121	246.	7.0	12.2	34.	56.	109.0
Methanol	1195	246.	7.0	12.2	34.	60.	113.2
M-Gasoline	1212	246.	8.5	12.2	35.5	65.	121.0
CO_2 Acceptor SNG	1084	246.	5.9	12.7	34.6	54.	107.0
Syngas	942	246.	3.2	12.7	22.5	47.	73.0
HYGAS	980	246.	4.8	12.2	23.4	49.	69.0
BIGAS	998	246.	5.8	12.2	23.9	50.	91.9
Synthane	870	246.	4.5	12.9	24.3	44.	82.0
Lurgi	1151	246.	4.5	12.7	36.7	58.	112.0
CE Power	1268	246.	3.0	12.0	38.	63.	116.0
West Power	1066	246.	3.0	12.0	32.	53.	100.0
Westinghouse Syngas	684	246.	4.5	12.2	20.5	34.3	71.4
Shale Oil	793	-	-	-	-	-	-

SOURCE: E. J. Bentz & Associates

EXHIBIT 4-4

ANNUAL OPERATING COST - 50,000 BBL LIQUIDS/DAY PLANT

(Million 1980 Dollars)

Synthetic Coal Liquids	Capital Charges @ 30% of Capital	Feedstock: Coal (Shale) @ $30/Ton (10)	Other Operating Costs: Catalysts & Chems. (escalated @ 20%)	Labor	Maintenance 3% of Total Capital	Utilities & Supplies (50% of Chem.)	Taxes & Ins. 3%	Total Other	Total Operating Cost	Average Cost/ BBL Liq.	Cost/ MM/BTU
Direct Liquefaction											
SRC-II	393.2	206.3	6	11.9	39.3	3	39.3	99.5	699.	42.557	6.47
EDS	426.6	222.6	6	13.	42.7	3	42.6	107.3	756.5	46.058	7.06
H-Coal S	375.6	219.2	7	12.7	37.6	3.5	37.5	212.6	807.4	49.157	7.24
H-Coal F.O.	294.3	203.9	6	11.8	29.4	3	29.4	79.6	577.8	35.178	5.51
Indirect Liquefaction											
Fischer-Topsch	519.	306.4	7	17.7	51.9	3.5	51.9	132.	957.4	58.29	9.61
Mobil 'M'	418.9	205.3	7	11.9	41.9	3.5	41.9	106.2	730.4	44.469	9.11
Methanol	182.5	101.1	3.5	5.9	18.3	mAm	18.3	48.	331.6	20.189	7.75
Methanol/SNG	639.9	256.9	6	13.7	64.0		64.	150.7	1047.5	(63.775)	11.57
Synthetic Gas											
Hi BTU Lurgi	393.9	226.7	4	13.7	39.4	2	39.4	98.5	719.1	43.78)	6.74
Med. BTU Westinghouse	266.9	170.6	3	10.3	26.7	1.5	26.7	68.2	505.7	(30,788)	4.74
Shale Oil											
Surf. Retort.	239.4	230.0	-	-	-	-	-	322.3	791.7	48.20	8.31

SOURCE: E. J. Bentz & Associates

4.2 SCALE OF PRODUCTION

Chemical process plant economics are highly sensitive to scale. Typical scaling factors or rules, are of the order of 60% - 70%. This means that as plant size doubles the cost only increases by 60% - 70%. In the case of decreased scale - the factor works in the opposite direction, a decrease in scale to l\2 plant scale leads to only about l\3 decrease in cost, which in turn leads to almost 30% more capital being required per unit of output. In very capital intensive processes, the importance of this to product cost is great. Coal conversion processes typically have 1/2 of their costs derived from capital charges, therefore a doubling of scale could reduce total unit costs by as much as 15% - 20%.

For this reason the question of plant scale must be very carefully examined. ESCOE, in ordering the various estimates to the values shown in Exhibit .4-1 applied "typical chemical engineering scaling factors". It is beyond the scope of the present effort to audit that undertaking. However, it is incumbent upon us to avoid the distortion of fairly presented uniform cost data by another exponential adjustment of capital costs. We must rescale the liquids' plants since they have been standardized on an 'input' basis, whereas we must examine costs on a plant 'output' basis, since we are also examining downstream processes and costs, which in turn require uniform scale assumptions.

Several difficulties are present:

1. The optimal size of plant and vessels for various systems is not known, due to the fact that most processes are now being explored at 5 - 10% pilot plant scale.

2. In a shift from uniform input scale to a uniform output scale, the most efficient processes will suffer the greatest penalty for their relative downsizing. This is not realistic.

3. We are not aware of the relative changes that took place in the initial (ESCOE) standardization, hence are blind to the compound effect of a second scaling adjustment.

For these reasons, with the emphasis upon the above factors, in order of their ranking, we have chosen to restate costs on an output basis through a linear method of cost adjustment.

The principal justification for this apparently unsound procedure is found in the first factor above - there is no evidence of commercial scale economy available in the case of any processes, with the exception of gasification plants (or gasifier reactors). In that case, multiple train plants appear at sub-commercial plant scale. In general, the bulk of the solid feed stock is so great, that initial reactor vessel sizes become

limited by available fabricating (rolling, bending, heat-treating) facilities, as well as transportation constraints. Subsequent plant stage economics do not determine. The gasifier-reactor vessel size limitations are such that returns to scale may be limited at a relatively low level of output.

For this predominant reason, we have used a unitary cost scaling factor to shift from uniform input sized plants (25,000 tons of coal per day) to a uniform output basis - 50,000 bbl. per day. A normal procedure would otherwise unfairly penalize the most efficient processes. In the final analysis, efficiency will determine economic advantage.

4.3 PRODUCT QUALITY (Reference No. 38)

The issue of product quality was resolved in a somewhat indirect manner by ESCOE. Their 'rating scale' value system (a measure of ordinal utility or value) which was based on present product price relationships is not a suitable method for long range economic analyses. During the long-run,. values change, end use patterns and conversion technology developments can create a surplus of a once premier product, or contrariwise, create a shortage of a previously unwanted by-product. Distillates and gasoline have traded places once and are perhaps posed to trade places again in their relative values.

The setting of widespread synthetic fuels production and use creates an entirely new framework for evaluating the 'normal' refinery slate of petroleum derived products. We have created a slate of products that to some degree reflects the range of compounds present in crude oil and in some degree reflects the technology (now) available to separately produce these compounds. In some instances the products were specifically sought, in other cases markets were sought for by-products that were available.

When coal is introduced in lieu of crude oil to a substantial degree, the available range of products and by-products may be the same, but the proportions of availability will be quite different, as will be the cost of producing different fractions. "

The proportion of each fraction that can be derived from crude oils is highly variable depending upon the nature of the feedstock and the nature of the refining processes used. In general, increasing the lighter fraction (-350°F) involves more severe reforming, and higher cost. The use of a heavy, sour feedstock crude oil worsens this condition. The use of coal as the feedstock significantly exaggerates this condition in certain synthetic processes - such as direct liquefaction. Indirect liquefaction processes are specific for alcohols, gasolines and the light ends.

It is reasonable to visualize a population of crude oil and coal "refineries" with individually more specialized or limited

product slates than are found in the universe of conventional refineries.

Broad slate coal synthetic liquids plants are unlikely to be widely deployed. This can be expected for several reasons:

1. Product upgrading is difficult and expensive once outside of the basic process.

2. A fair range of limited slate coal-conversion processes are becoming available, that more selectively produce various fractions.

The costs of achieving a given level of product quality increases in a slightly non-linear fashion as the percent hydrogen is increased or the boiling range is lowered. Exhibit 4-5 shows this relationship graphically. Benchmark products and costs are shown for several direct and indirect liquefaction processes. The indirect processes - which catalytically synthesize liquids from synthesis gas are specific for gasolines, alcohols and LPG. The direct catalytic hydrogenation processes tend to produce naphthenes and crude oil equivalent range compounds. The hydrogen solvent systems tend to produce a more limited range of product with a substantial (20 - 35%) naphtha fraction, the majority product in the distillate boiling range (350°F - 750°F).

Increased yield of the higher quality products can be achieved by:

- Increased coking of bottoms
- Adding more hydrogen
  - To process stream
  - By hydrotreatment of products

The cost of the former is seen in the difference between SRC II and EDS on Exhibit 4-4. The Exxon donor solvent system cokes the bottoms (or heavy distillates) to yield more naphtha and LPG as follows:

SRC II			EDS		
(18%)	13,000 bbl	Naphtha	(36%)	27,500	Naphtha
(8%)	6,400 bbl	#2 Fuel Oil	(15%)	10,000	LPG
(73%)	52,900 bbl	Distillate	(49%)	37,200	bbl Distillate
	72,300			75,400	

Similarly changing the H Coal process from a fuel oil to a synthoil mode increases cost as it lowers the average boiling range.

The distribution of product quality that is typical of each process is shown on the following page. (Exhibit 4-5).

EXHIBIT 4-5

SYNTHETIC PLANT PRODUCT YIELDS

QUANTITY - BBLS/DAY OUTPUT

		Direct Liquids				Indirect Liquids				Synthetic Gas[3]		Shale Oil
	Approx. API°	SRC-II	EDS	H Coal (Syn.)	H Coal Fuel Oil	Fischer/ Tropsch	Mobil 'M'	Methanol	Methanol SNG	Lurgi H BTU	West. Lo BTU	Shale Bit. (Surf.)
SNG (Low) MM BTU/Day											880	
Methanol (High) MM BTU/Day									140	300		
LPG	125°	4,610				23,380	6,080					
Propane (C_3)	148°		2,950									
Butane (C_4)	110°		3,160									
Methanol	NA							50,000	48,740			
Gasoline (C_5)	62°					82,640	43,920					
Naphtha (C_{5+})	40°	10,625	17,970	28,380	15,070	1,490[1] 2,490[2]			1,260	2,025		
Fuel Oil (Heavy Distillate)	18°+	35,000		21,620	34,930							50,000[4]
Fuel Oil (Resid.	5°		25,920									

[1] Light (Diesel) Fuel Oil API-56°, [2] Heavy Fuel Oil API-41°.

[3] 1.067 E14 BTU/yr. is equivalent to 50,000 BBL/day of typical Synthetic Liquids ≤ 6.5 Million BTU/bbl.

[4] Synthetic light crude oil equivalent - approx. 20° API.

SOURCE: E. J. Bentz & Associates

The range of quality is not entirely a function of the API gravity, the boiling range or hydrogen content, however, these related indices are sufficient for our purposes. We can relate the cost of producing a synthetic fuel to this scale. Exhibit 4-6 shows a graph of the production cost of the whole liquid product from various synthetic processes versus the average (50% distillation) boiling range of the synthetic product.

This chart shows the increase in average cost per million btu's as the average distillation range of the liquid is lowered. Thus gasoline costs more to produce via indirect processes such as Mobil 'M' or Fischer Tropsch, than naphthas, distillates and fuel-oils.

This scale[6] illustrates the relative costs of the ESCOE liquid fuel processes. It also contrasts the (1978) earlier ESCOE cost estimates with later estimates of shale oil costs developed by the Office of Technology Assessment (1980). The oil shale liquids, which reside in a higher boiling range than the coal liquids, appear significantly more expensive on this scale. In order to reconcile this discontinuity it is necessary to digress briefly.

4.4 ESTIMATING METHODS

The accuracy of complex systems cost estimating has been the subject of several studies. These studies have been primarily behavioral rather than conceptual. As larger, more complex systems projects have been conceived, -the amount of unknown and untried system components have necessarily increased due to the great cost of large system prototypes. Pilot or process demonstration units and models are developed at extremely small scale for the same economic reasons; the subsequent scale-up is of a high order. Estimates drawn from bench or small scale pilot plants are subject to much greater estimating error.

Two overriding conclusions have been reached in this matter:

1. Cost estimates tend to decrease in variation from actual costs as the elapsed time between estimate and construction is shortened.
2. The accuracy of the estimate is related to the degree of detail of the design engineering.

Chemical process plants,[8] public works,[9] and weapons systems[10] development and estimating histories have been analyzed, with

[6] Syngas (fuels) are not suitable related to boiling point measurement.

[7] "An Assessment of Oil Shale Technologies", OTA - June 1980.

[8] A Review of Cost Estimates in New Technologies: Implications for Energy process Plants, Rand Corp. for the Dept. of Energy July 1979.

[9] "Systematic Errors in Cost Estimates for Public Investment Projects ", Hufschmidt & Gerin, in The Analysis of Public Output, Columbia Univ. Press 1970.

[10] The Weapons Acquisition Process: An Economic Analyses, Peck & Scherer, Harvard Univ. 1962.

EXHIBIT 4-6

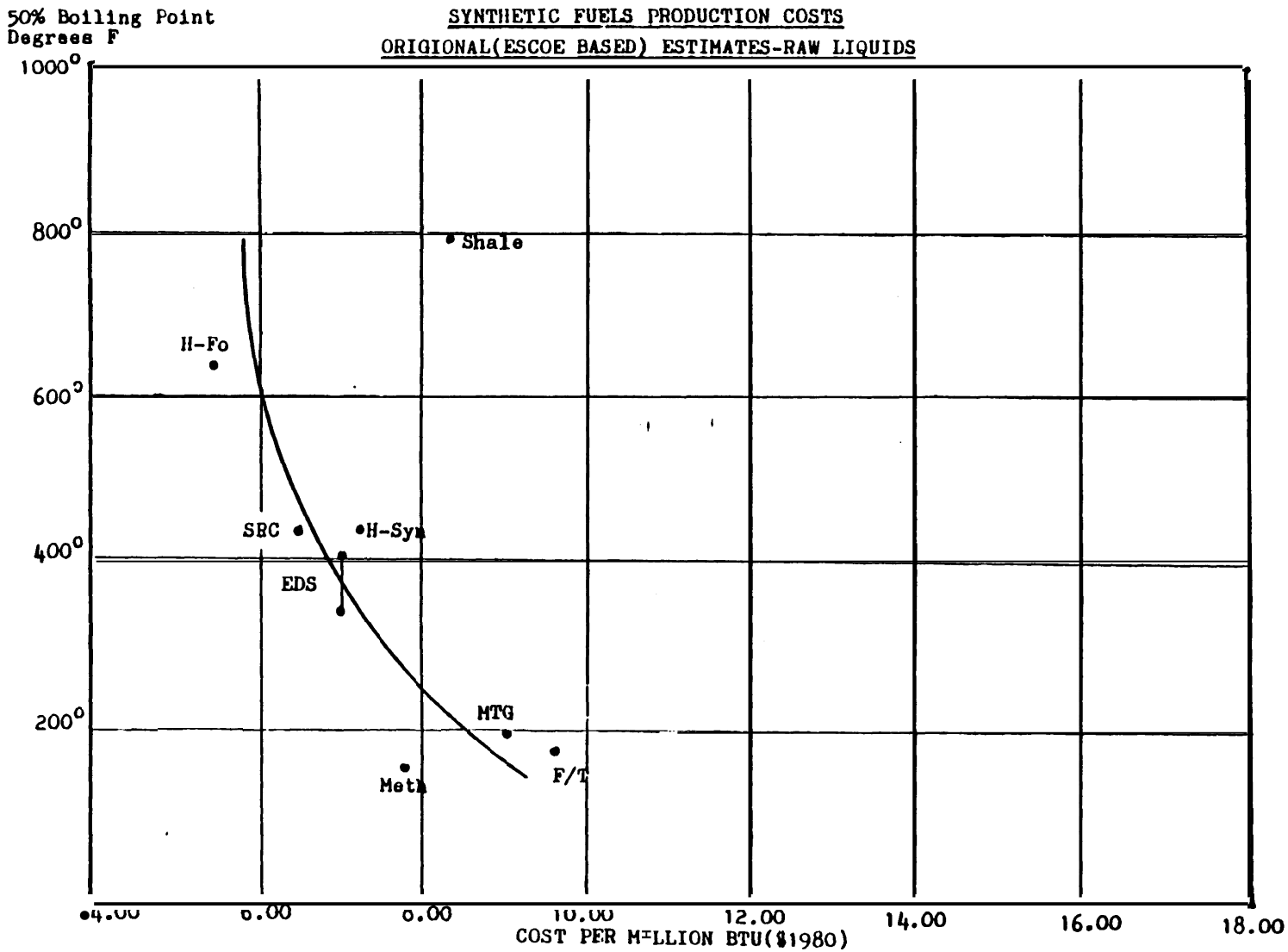

SOURCE: E. J. Bentz & Associates, Springfield, Virginia

essentially the same range of variances found between early estimates and actual results - growth in costs have occurred of the order of 2-3 times the oriqinal estimate. The average of actual to estimated costs($\frac{Ca}{Ce}$), were found to be as follows:

System Type	Actual Cost/ Estimated Cost (Ratio)
Weapons System	**1.40 - 1.89**
Public Works	**1.26 - 2.14**
Major Construction	***2.18***
Energy Process Plants	***2.53***

The weapons system cost overruns were higher in the ***1950's (1.89)*** than in the 1960's (1.40) most likely, because of the greater degree of pioneering efforts and the greater lack of experience with large weapons systems at that time.

Exhibit 4-7 below shows the cost growth experience in pioneering energy systems as a function of the type of estimate employed (or available at that time). It can be seen that the preliminary estimates were nearly double that of the initial estimates - (84% above the first estimate) and the definitive estimates increased almost as much again from the preliminary estimates (134% above the first, or 50% above the preliminary estimate) .

The ESCOE data were largely taken from preliminary estimates, based on Process Demonstration Unit (PDU) development experience, in one or two cases from pilot plant experience (at less than 1% scale) or from foreign commercial experience under different site and environmental conditions. The OTA shale oil values were derived from a very highly definitized engineering analysis. The degree of evolution which that estimate had undergone can be seen on Exhibit 4-E.

If the other ESCOE liquid synfuel plants were to increase by as much as have typically occurred between preliminary and definitive estimates, the costs would increase by about another ***50%.***[12] That would result in a shift of the cost line on Exhibit 4-6 as shown on Exhibit 4-9.

Such an interprelation of the quality of the ESCOE estimates would resolve the discrepancy between the ESCOE estimates and the OTA estimates (for oil, shale liquids) and produce a more continuous scale of synfuel cost relationships.

An alternative method of calibrating the various estimates for consistency with respect to the status of process estimates as well as the methods employed in the estimating process? would be to select

[11] Average increase from preliminary to definitive cost estimates for energy process plants.

[12] P3 - Reference 3.

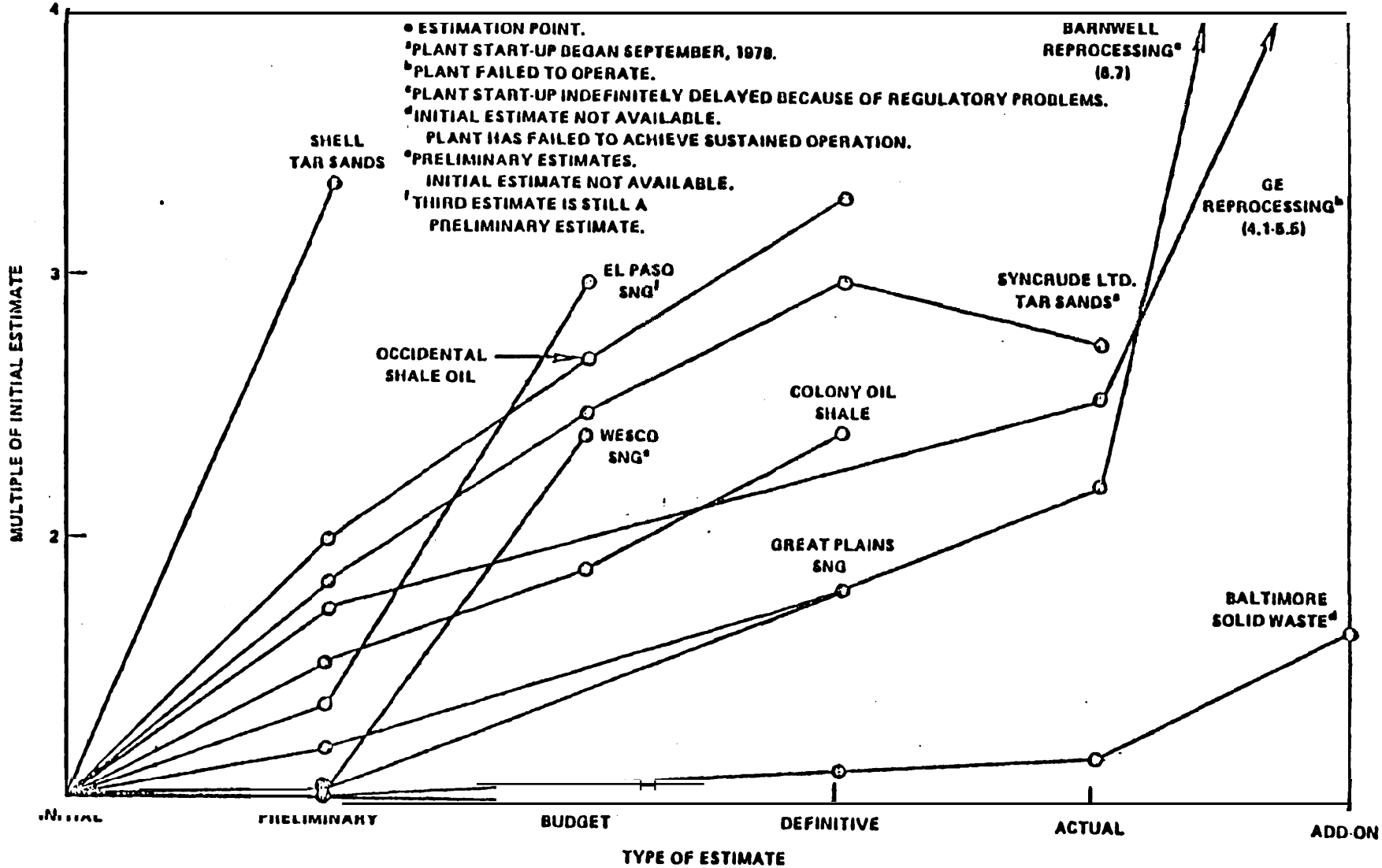

EXHIBIT 4-7

COST GROWTH IN PIONEER ENERGY PROCESS PLANTS (CONSTANT DOLLARS)

Source: "A Review of Cost Estimation in New Technologies: Implications for Energy Process Plants,", DOE, E-24-81, July 1979.

EXHIBIT 4-8

HISTORY OF SHALE OIL CAPITAL COST ESTIMATES

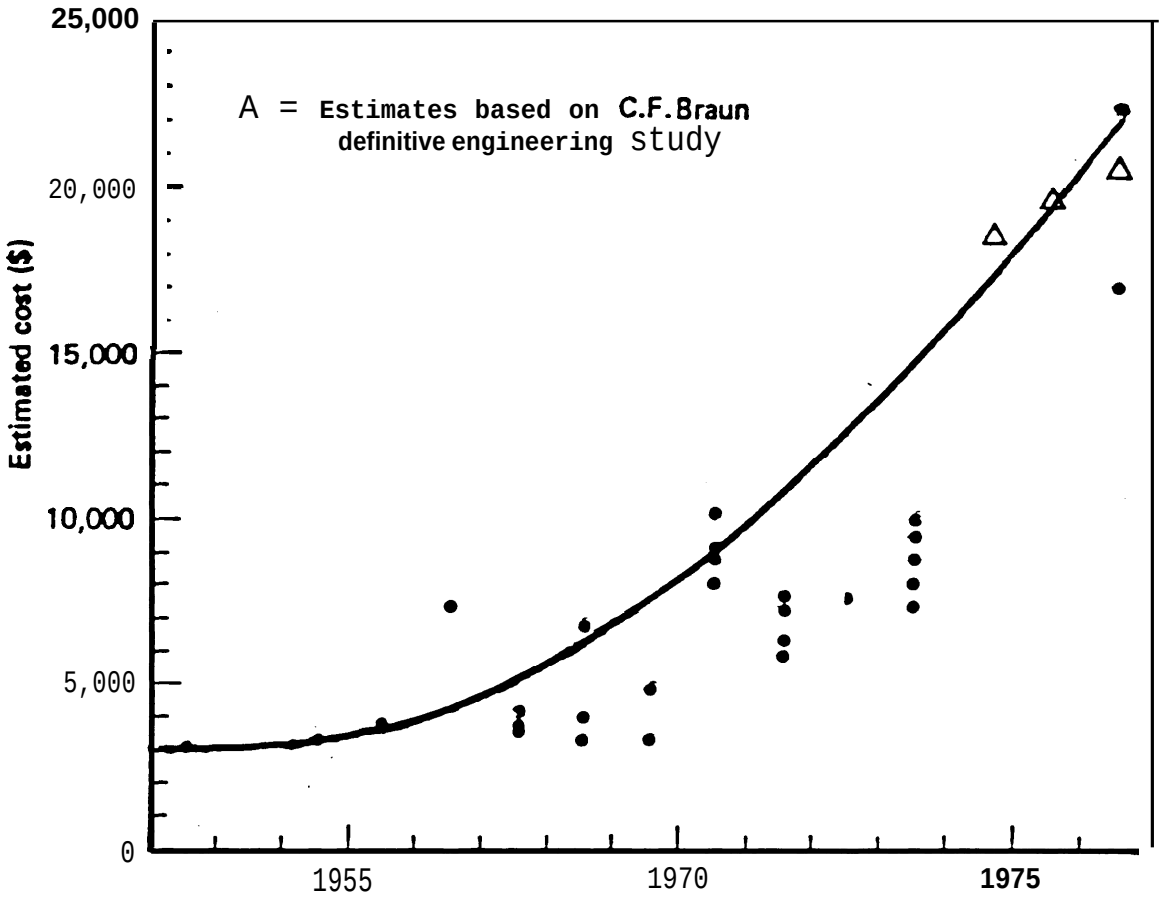

Estimated surface **shale oil facility contruction costs**
(capital costs/barrel/ca!endur day; constant $ 1977)

ejb&a .

a sub-set of processes that were developed on the basis of the same level of engineering definition or maturity - preferably the most advanced projects in this sense.

There have been more recent, updated design and estimating efforts undertaken in the case of:

1) Indirect Liquefaction - Mobil MTG. [13]

2) Methanol [13]

3) High BTU Gasification [14]

4) Direct Liquefaction - H-Coal [15]

These estimating efforts are essentially comparable with the (OTA) Oil Shale estimates in terms of the relative engineering and development maturity of the process plants involved.

Exhibit 4-9 also reflects the liquid fuel costs of 'generic" synfuel processes based on the selected "best estimates" noted above. These are not meant to be truly generalized processes (or generic processes) , they are nonetheless representative, advanced members of each synthetic liquid product class.

The costs of these processes are shown in detail on Exhibit 4-1o.

The effect of using the latest, or best estimates is approximately the same as was achieved by the use of the Rand Corp. (and others) cost estimating error factors. The original ESCOE values are increased by about 50% on average.

The satisfactory conjunction of factored cost estimates arrived at by the use of statistical variances derived from past estimating histories with the "generic" estimates taken from the most advanced projects, gives us an improved measure of confidence in the adjustment of ESCOE synfuel production costs to the higher levels displayed on Exhibits 4-9 and 4-10. The revised functional form of the liquid fuels is displaced to the right on Exhibit 4-9 by about $3.00-$4.00 per million BTU's. The relative costs are not appreciably affected considering the probable differences in residual (estimating) error contained in these estimates. It seems most reasonable, however, to presume that the majority of the estimating errors have been accounted for, and the values we are employing are normalized to the greatest practical degree possible at the present time: i.e., barring further engineering or demonstration plant design and construction experience.

[13] Liquefaction Technology Assessment - Phase 1 ORNL-5664 Feb. 1981.

[14] Unpublished Analyses

[15] Rand Corporation - Unpublished Analyses.

EXHIBIT 4-9

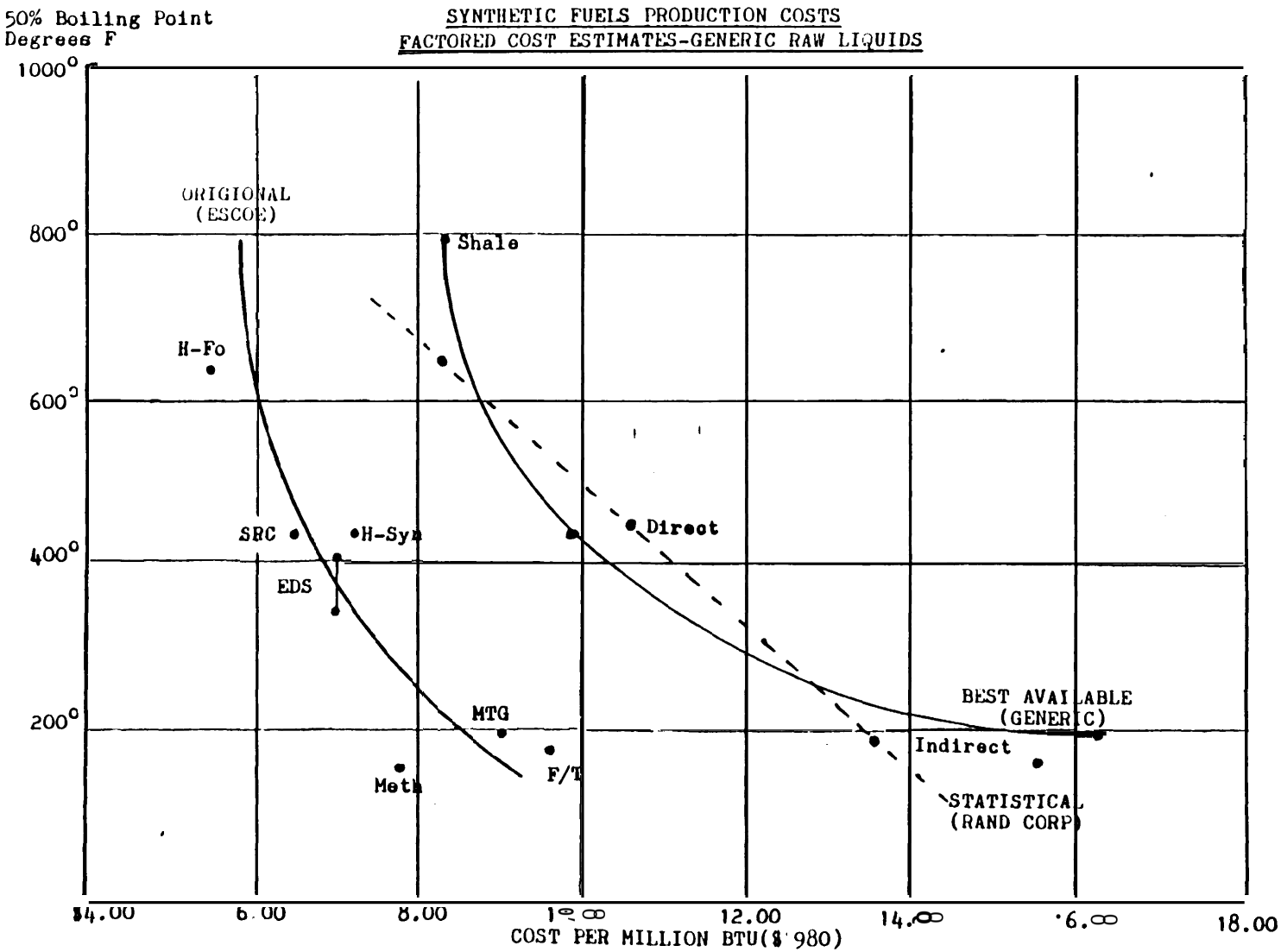

SOURCE: E. J. Bentz & Associates, Springfield, Virginia

EXHIBIT 4-10

BEST AVAILABLE ESTIMATES - TYPICAL SYNFUEL PROCESSES

	Revised Capital Est. $ 1979	Revised Capital Est. $ 1980	Capital Recovery @ 30%	Feedstock Cost (From 4-4)	Other* Oper. Costs (From 4-4)	Total Revised Estimate	Cost Per Barrel $ 1980	Cost Per MM BTU $ 1980	Cost 1 Gal. $ 1980
Direct Liquids						$1,091.8	$66.47	$ 9.79	$ 1.58
H Coal (Synfuel)	$2,200	$2,200	$ 660	$219.2	$212.6	1,281.3	78.01	16.18	1.86
Indirect Liquids									
Mobil MTG (Lurgi)	2,685	3,054	916.2	205.3	160	688.	11.88	15.53	1.00
						1048 SNG	360.		
SNG/Methanol (ICI-Lurgi)	1,849	21,035	631.1	256.9	113.7	886.4	-	8.30	-
High BTU Gas									
Lurgi (BGC)	1,600	1,820	546.	226.7					

*Adjusted for capital cost changes.

SOURCE: E. J. Bentz & Associates

ejb&a

The H-coal process (in the synfuel mode) has been used as a surrogate for direct coal liquids. Updated estimates of an unpublished nature were used that draw from the cumulative pilot plant histories and the most recent demonstration plant estimates. The Mobil Methanol-to-Gas (MTG) and methanol estimates were drawn from a recently published study by Fluor Corporation for Oak Ridge National Laboratory of indirect liquefaction processes. The study provided a (nearly) 100% gasoline option which virtually eliminates the by-product costing problems. The methanol estimates were Menthanol/SNG joint production process schemes. The systems could have been adjusted in keeping with the 100% gasoline MTG process scheme by eliminating the direct costs of methanol to gasoline stages. Alternately the by-product value of SNG could be directly priced by using the high BTU gas plant costs from the SNG estimate below. Both synthesis gas processes are Lurgi systems.

The SNG process estimate was taken from unpublished estimates drawn from advanced commercial design and estimating efforts. An advanced Lurgi gasifier - the British Gas Corporation slagging bed version - is used.

The costs of direct and indirect liquids - increase by about 50% - to remain in approximately the same relative cost relationship that the ESCOE based data displayed. The hi-BTU gas estimates only increased about 25% above the earlier ESCOE values. This appears to be reasonable considering the relatively more mature status of (Lurgi) gasification technology. The OTA oil shale liquids estimate of $48.20\bbl reflects the precommercial stage of development. The level that we are attempting to standardize at, versus the development stage of the foregoing direct and indirect liquid systems.

Continuing Cost Escalation

The earlier analyses of Rand Corp. and others suggested that the potential cost increase from even a definitive estimate to the actual project costs of pioneer plants and major developmental systems is typically another twenty percent increase in cost. We can add that increment to arrive at an upper value for all systems.

There have been and continue to be other relevant post-commercial trends of commercial series production plants that were not considered by the authors of the cost escalation - studies cited above.

Historical data regarding the chemical process industry and petroleum refining industry demonstrates a strong pattern of capital productivity improvement or technology advance, during post-development years. This can be demonstrated for the entire sector as well as in the micro-industrial setting of a single chemical industry segment.

A capital productivity rate of less then 2%/year can return the 20% (actual cost to definitive cost estimate potential increase

during the first 10 years of commercial deployment. In 20 years at least a 35% reduction in the capital outlay per barrel of product can be expected.[16]

These two viewpoints provide us with minimum and maximum estimates of the most probable range of expected production costs for synthetic fuels. Exhibit 4-11 illustrates the range of expected values for synfuel liquids based on these estimating limits.

This scale of values will be used to provide individual product (or by-product) costs. The presence of a significant amount of petroleum in the total supply equation, for as far as we can see, creates many cost and pricing complexities. We do not wish to complicate synthetic fuel supply economics with World Oil Price disruptions, or any free-market or administered market conditions. We will close our eyes to all of these dimensions and construct our cost schedule on the basis of coal based liquid, gas and solid fuel options or opportunity costs.

[16] This rate (1.4%) has been experienced by the entire chemical industry throughout the entire post war period (1949 to date). Specific industry sectors have experienced much greater rates of productivity improvement; viz, synthetic methanol experienced more than a 4% / year productivity gain for over 20 years.

EXHIBIT 4-11

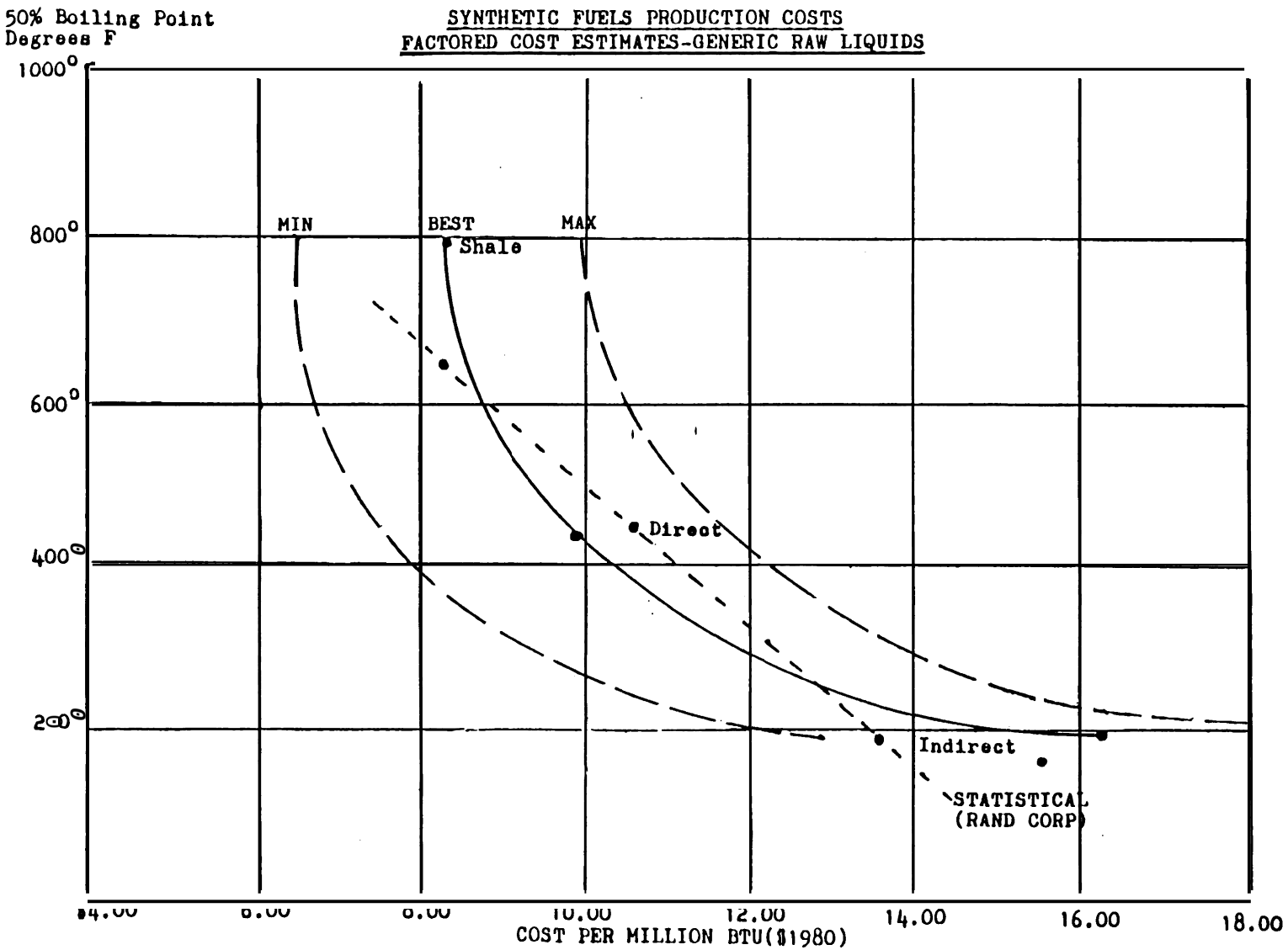

SOURCE: E. J. Bentz & Associates, Springfield, Virginia

4.5 PRODUCT UPGRADING (References 39, 40)

The typical (direct liquefaction) coal liquids possess several characteristics that require upgrading in order to:

- Provide product stability
- Permit mixture with conventional petroleum liquids . . . or
- Permit common use of pipelines and other infrastructure

The principal differences result from:

Lower levels of hydrogen - 9 - 10% versus 11 14% for petroleum and 11 - 12% for shale oils.

Higher levels of heteroatoms in both liquids and shale oil (nitrogen and oxygen compounds) than are found in petroleum feedstocks.

The lower hydrogen and higher heteroatom conditions are resolved together by hydrotreatment. Raising the hydrogen levels up above 10% results in the removal of most of the nitrogen and oxygen heteroatoms, and also decreases the aromaticity of the coal liquids and shale oils.

The high aromatic content of coal liquids makes the naphthas excellent high octane blending stock - however the high nitrogen and oxygen percent (2 - 3%) in the heavy naphtha range requires the use of fairly severe hydrotreatment to remove the diolefins and heteratoms - which are present in the form of phenols and cresols (oxygen).

In the synfuel distillates the nitrogen level is higher and results in unstable compounds with rapid gum formation, making this a very unsatisfactory fuel unless upgraded.

There have been a succession of studies of synthetic liquids upgrading processes sponsored by DOE. They have been conducted on both shale oil and direct coal liquids.

The principal measures examined include:

- Hydrotreating (Exhibit 4-12)
- Hydrocracking
- Fluid Catalytic Cracking

Catalytic reforming as well as hydrocracking are subsequently used to upgrade (naphthas) to finished transportation fuels. (See Exhibit 4-12 below) .

EXHIBIT 4-12: SIMPLIFIED FLOW DIAGRAM OF CHEVRON FIRST STAGE HYDROTREATER REFINING OF SRC-II OIL

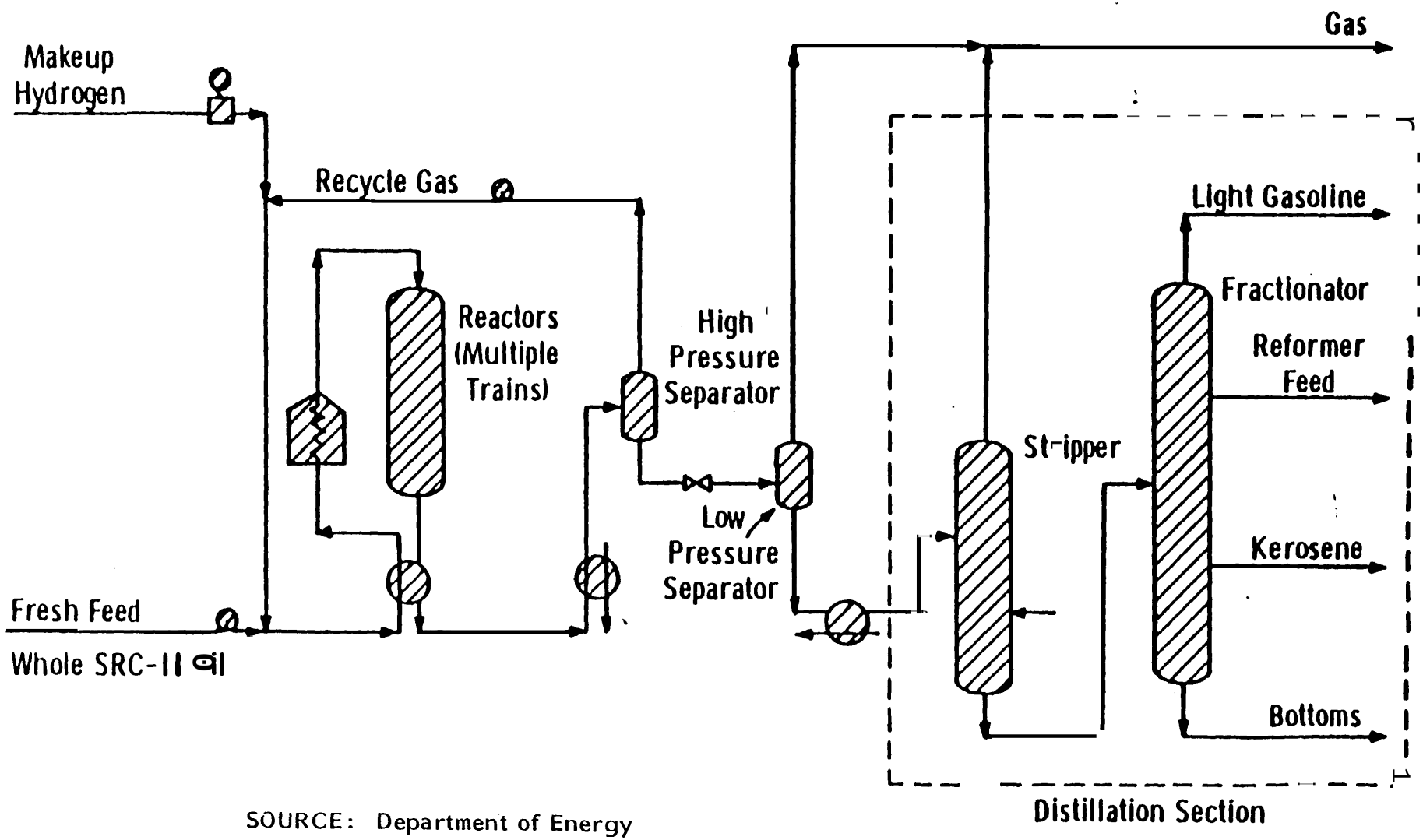

SOURCE: Department of Energy

Consideration has also been given to variation in the hydrogen source for hydrotreaters - the partial oxidation of raw coal liquids, reforming of refinery products and overheads, or outside gasses.

An additional issue is the location of upgrading facilities; at the coal liquids (or shale oil - retort) plant, or at a conventional refinery, or both.

The factors which favor the synthetic oil plant location are:

- available residue for hydrogen manufacturing
- local upgrading permits common carrier transportation
- upgraded synthetic product can be blended with petroleum feedstock (in pipelines and at refineries)

The factors that favor a refinery location for upgrading are:

- Superior prospects for system optimization
- Availability of hydrogen from naphtha reformers
- Uses available refinery capacity idled by lack of petroleum feedstock.

An alternative approach could be to perform a minimum amount of upgrading at the synfuels plant to facilitate transportation and storage, with product finishing and blending performed at a larger refinery site. The coal liquids in general do not require further cracking because they lie in the atmospheric gas-oil and naphtha range. The shale oils require cracking to produce more usable product from the higher distillate range such as jet fuel and diesel oils. The heavy distillates from coal liquids; if heavily hydrotreated (to 11% H by wt) can be used as a feedstock for a fluid catalytic cracker (FCC) where the product can be significantly upgraded.

Exhibit 4-13 illustrates the cost of upgrading various direct liquid process cuts.

The raw liquids versus the upgraded liquids are compared below in hydrogen content.

	Raw Liquid	Upgraded
SRC Naphtha	11.33%	11.6%
SRC Distill.	7.71	11.0
H Coal Distillate	10.1	11.4
H Coal Fuel Oil	7.37	10.0

These cases cover the general conditions experienced by the range of most direct coal liquids - the samples being drawn from experimental laboratory investigations performed by Mobil Research and Development Corporation upon SRC light and heavy fractions and

EXHIBIT 4-13

DIRECT LIQUIDS UPGRADING COST

5o, ooo BBL) – 198o $

	SRC-II		H Coal Syn. Crude or Fuel Oil		
	Naphtha	Heavy Distillate	Naphtha	Distillate	Fuel Oil
Operating Labor	.0639	.0855	.0639	.086	.085
Maintenance	*1606	*5830	e1606	=409	*593
Administration & Support	.0394	.0992	.0394	.077	.100
G&A	.1828	.5757	.1828	.420	.585
	.4467	1.3434	.4467	.992	1.363
Fuel	.3517	.6691	.3517	.525	.154
Utilities	.1089	.9716	.1089	.577	.946
Cat. & Chem.	.0194	.9829	.0194	1.650	1.358
Hydrogen	.5586	6.836	.5586	2.390	7,355
	1.o38≈	9.4895	1.6386	5.142	9.813
Capital Recovery (30%)	2.577	8.484	2.577	5.449	7.933
Total Upgradiog Cost	4.062	19.32	4.o≤23	11.58	19.109
Product					
API	37.5	24.5	Same as	25.7	12.5
H Content (wt %)	11.6	11.0	SRC II	11.4	10.0
BTU/lb.	18,500	18,780	Naphtha	18,970	18,400
Plant ⁼nvestment					
Total in Millior	$141	$464.5	$141	$298	$434
$/BBL	$8.59	$28.28	$8.59	$18.16	$26.44

SOURCE: E. J. Bentz & Associates

H-coal distillate and fuel oil fractions. This pretty well covers the range of liquids produced by SRC and H-Coal (synfuel and fuel oil mode) and can be extrapolated to the EDS case.

Additional work performed by U.O.P., Chevron and Suntech confirm the general upgrading needs and the best approach - hydrotreatment.

The plant investment required varies from $140 million dollars for the mild hydrotreatment required of the naphtha cuts (C_5 - 400°F) to as much as $465 million for a hydrotreatment plant for the heavy distillate or residual SRC fraction and nearly that for the fuel oil fraction of H Coal fuel oil process plants.

The average upgrading cost is about $2.00 per million BTU's - varying from $4.00-to nearly $20.00 per barrel. The latter figure represents an economic limit which suggests either a lower grade utilization of the heavier products or a different refining approach.

The direct liquids upgrading cost analysis can be compressed to a single representative-or "generic" upgraded coal liquid.

The general costs of upgrading are shown on Exhibit 4-14:

Naphtha's	**$ 4.06**
L. Distillates	**11.58**
Heavy Distillates '- Fuel Oil	**19.21 (19.11-19.32)**

Individual processes such as EDS SRC-II and H-Coal (fuel oil mode) will differ in raw liquid base costs, but since the quality of product tends to vary in a reasonable relationship to their costs[17], the costs of upgrading, which are increasly related to quality, lend to cause a clustering of upgraded direct llquid costs.

If we utilize the costs of H Coal production of raw liquids developed above as a base, the 'generic' costs for upgraded products would be as follows on Exhibit 4-14. The estimated costs of nearly $75.00 per barrel or over $12.00 per million btu's is for a product that is equivalent to a high grade refining crude oil feed.

The upgrading of shale oil to a suitable refinery syncrude has been estimated by Chevron to cost $10.00 per barrel (in 1980 dollars) or $1.72 per million btu. If this is added to the cost of raw shale-oil liquids at the retort, the total cost of shale oil "syncrude" is:

[17] See Exhibit 4-6 above.

EXHIBIT 4-14

DIRECT LIQUIDS UPGRADED COSTS/BARREL

($ 1980)

	Barrels/Day	Cost/BBL	Total Daily Cost	
Naphtha	28,380	$ 4.06	$115,223	
Distillate	21,620	11.58	25% 36%	
	50,000		$365,583 =	$7.31 Avg.
Raw Liquid Cost (per barrel)				66.47
Total Upgraded Fuel Cost Per Barrel				$73.78
Total Upgraded Fuel Cost Per MM/BTU				$12.30

SOURCE: E. J. Bentz & Associates

OIL SHALE LIQUIDS COST

($1980)

	Per Barrel	Per Million BTU
Retorted Shale Oil	$48.20	$ 8.31
Upgrading	10.00	1.72
	$58.20	$10.03

These compare favorably with upgraded direct liquefaction production in the 'syncrude' class as shown below:

SYNCRUDE PRODUCTION COSTS

($1980)

	Per Barrel	Per Million BTU
Shale Oil	$58.20	$10.02
Direct Coal Liquids	21.12	18.5%
Shale Oil Advantage	12%	9%

The shale oil has about a 21%-cost advantage as a refinery feed-Stock. This is reduced to less then a 20% cost advantage on a heating value basis. However heating values are not the principal criterion to be applied to refinery feedstocks - quite the opposite - the lighter crude demands a premium. In certain instances the coal liquid with higher aromatic content will be preferred, at other refineries the shale oil, with a higher hydrogen content, and a greater yield of distillate product will be sought.

Exhibit 4-15 illustrates how the process of upgrading shifts the cost of oil shale and coal based synthetic crudes upward by $1.75 - 2.50 per barrel.

4.6 REFINING SYNTHETIC LIQUIDS

The direct liquefaction and oil shale synfuels have to be further upgraded to end-use product quality in order to be comparable with indirect liquid products such as methanol from coal or gasoline from methanol (from coal). In a wider sense, this is also desirable in order to achieve comparability with synthetic natural gas (SNG) which can be used for a wide range of end use applications in its 'raw' manufactured state.

The indirect processes produce refinery output (or intermediate) grade products, without the need for the "refining" of crude liquids. In order to compare direct liquids and shale liquids with indirect process liquids, we must bring the former

EXHIB T 4-15

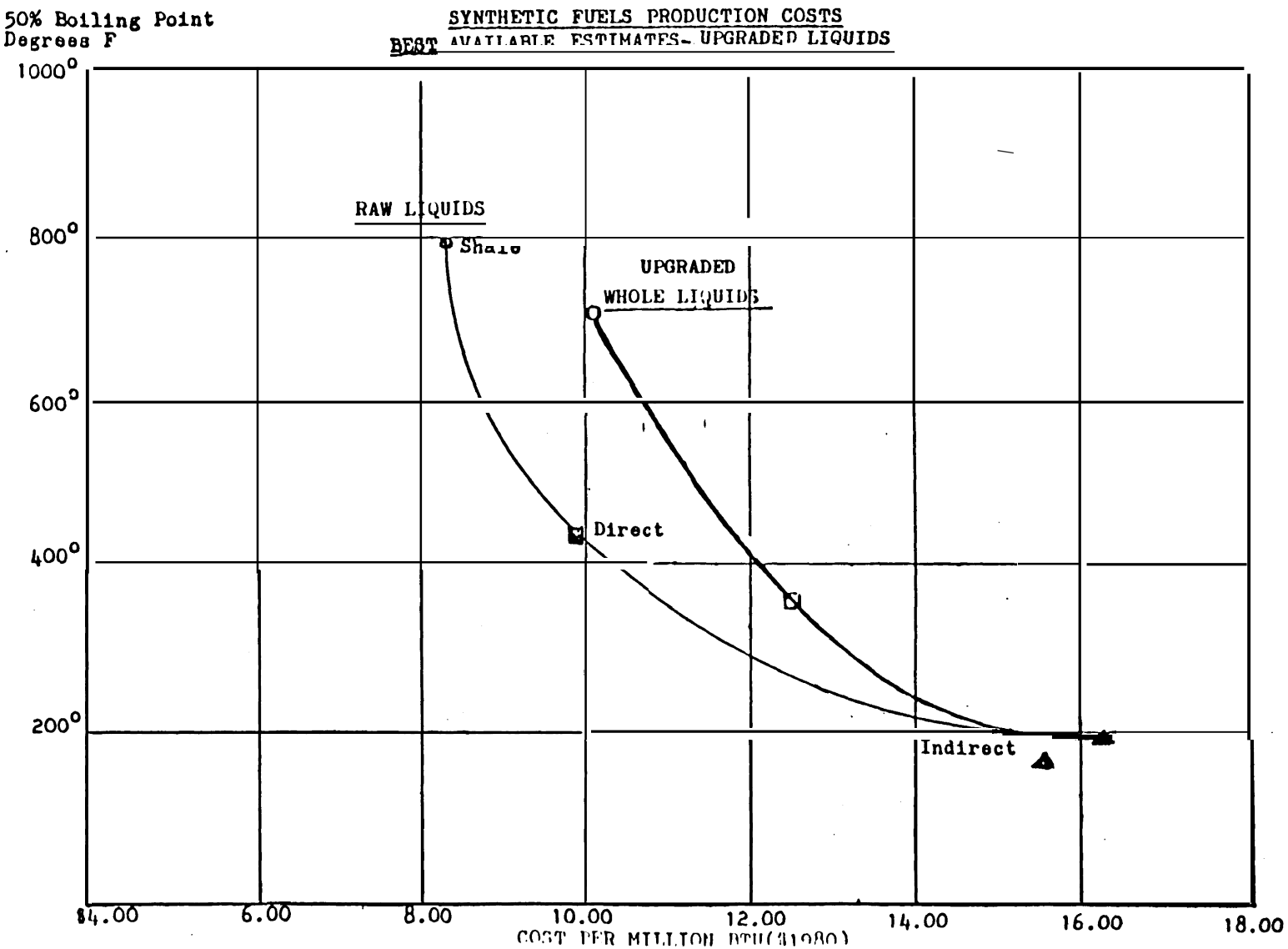

SOURCE: E. J. Bentz & Associates, Springfield, Virginia

into a state that is comparable. This requires the refining of the synthetic liquids to finished fuels.

Refining of shale oils and coal liquids will vary in cost depending upon the size, location and degree of integration of the refinery complex. We will assume that this is not done in an existing refinery (perhaps modified to better handle these feedstocks) , but is performed at a new refinery integrated at the retort or conversion plant site. Such a refinery is under-scale (50,000 bbl/day) and remote from chemical complexes that might make better use of by-products and hence provide higher (by-product) credits or other similar economic benefits.

The costs of upgrading the raw coal and shale liquids to high grade (transportation) fuels is shown below:

REFINERY COSTS FOR SYNTHETIC (RAW) LIQUIDS

($1980)

	Cost Per Barrel	Cost Per Million BTU
Shale Oil (Hydrotreat & Hydrocrack)	$18.50	**$3.19**
Coal Liquids (Hydrotreat)	$18.29	$4.02

The costs of refining synthetic liquids cannot truly be determined without specifying the product slate produced. The costs of refining a particular feedstock can vary depending upon the product cuts sought. The basis used above is not strictly comparable between the processes. It tends to slant the refinery approach to the type of slate that is favored by the feedstock - Light distillates in the case of shale oil, and gasolines and distillates in the case of coal liquids.

Exhibit 4-16 illustrates the potential variation.

These costs can be seen to vary dramatically if different product slates are sought. If the highest grade transportation fuels are maximized, to provide the highest degree of comparability with indirect liquids. The costs are as follows:

REFINERY SYNTHETIC UNITS TO 100% TRANSPORTATION FUEL

($ 1980)

	Shale		Coal	
	$/BBL	$/MM BTU	$/BBL	$/MM BTU
Raw Liquid	$48.20	$ 8.31	$66.47	$ 9.79
Upgrading	18.50	N.A.	18.28	N.A.
Total	$66.70	- $11.50	$84.75	- $14.61
Average Heat Content\ BBL	5.8 Million BTU		5.8 Million BTU	

EXHIBIT 4-16

PROCESS AND SLATE

(1980 $)

Feedstock	Hydrotreat & Hydrocrack	Severe Hydrotreat	Moderate Hydrotreat
Coal Liquids*	Motor Gasoline	Motor Gasoline Plus	Motor Gasoline Plus
Product		Jet Fuel	#2 Fuel Oil
Slate	(100%)	(1/3 - 2/3)	(1/3 - 2/3)
Cost	$20.70	$18.29	$12.55
Shale Liquids	Hydrotreat & Hydrocrack	Hydrotreat-FCC	Coking Hydrotreat
	3/4 - 1/4		(4/5 - 1/5)
Product Slate	Motor Gasoline Plus Jet Fuel	Jet Fuel Plus Motor Gasoline	Jet Fuel
Cost/BBL	$18.50	$17.00	$16.00

*SRC-II

SOURCE: E. J. Bentz & Associates

By comparison, indirect liquid (methanol to gasoline) costs are about $78.00 per barrel; approximately in the middle of this range. The cost per million BTU's is lower for shale and coal liquids, refined to a transportation slate consisting of gasoline and distillate fuels (jet fuel and diesel oil). If direct liquids are refined to a 100% gasoline slate the costs would increase to $87.17 per barrel or above $19.00 per million BTU's.

Exhibit 4-17 graphically displays the finished fuels in a framework which relates the product quality to the finished fuel cost.

Exhibit 4-18 calculates the total cost of refining coal liquids. A 50,000 barrel per day refinery for coal liquids would cost between $420 million and $690 million. The lower case represents a moderate hydrotreatment plant producing #2 fuel oil and gasoline, the upper case represents a hydrotreatment and hydrocracking plant that produces 100% gasoline.

Instead of using other indirect measures of product value,[18] we can use a cost based scale. The lighter fractions cost more to produce from both coal and shale, whether by direct or indirect means. By-product credits do not have to be assigned to determine the cost of a single cut liquid. Upgrading plant has been assigned to individual fractions so that the full cost of the beneficiated product cut is known. The costs of fully refining the product are developed incrementally by determining the cost of creating a 100% gasoline yield, and two subsequently lower grade mixtures.

The alternate product slate refinery costs of Exhibit 4-18 can be used to develop a measurement of the direct costs of products in a multi-product refinery run. The principal cost differences result from the increased capital (per unit of product yielded) and the increased consumption of hydrogen associated with higher grade product slates.

If we take the per barrel cost of producing a 100% gasoline slate. and assign it to the gasoline fraction of a mixed slate as the appropriate cost of that portion of the output, the remainder of the total cost divided by the number of barrels of the other product (jet fuel or #2 fuel oil) will give us the unit cost of the "secondary product".

Exhibit 4-19 shows this costing procedure for the slates presented for direct liquids refining in Exhibit 4-17.

By using this method, we are not artificially lowering the cost of gasoline production by assuming a market equilibrium price

[18] Product value ratios are commonly used. They are of absolutely no meaning in a long-term and discontinuous supply context. The use of such ratios is a major violation of the most elementary laws or principles of economics as a measure of utility.

EXHIBIT 4-17

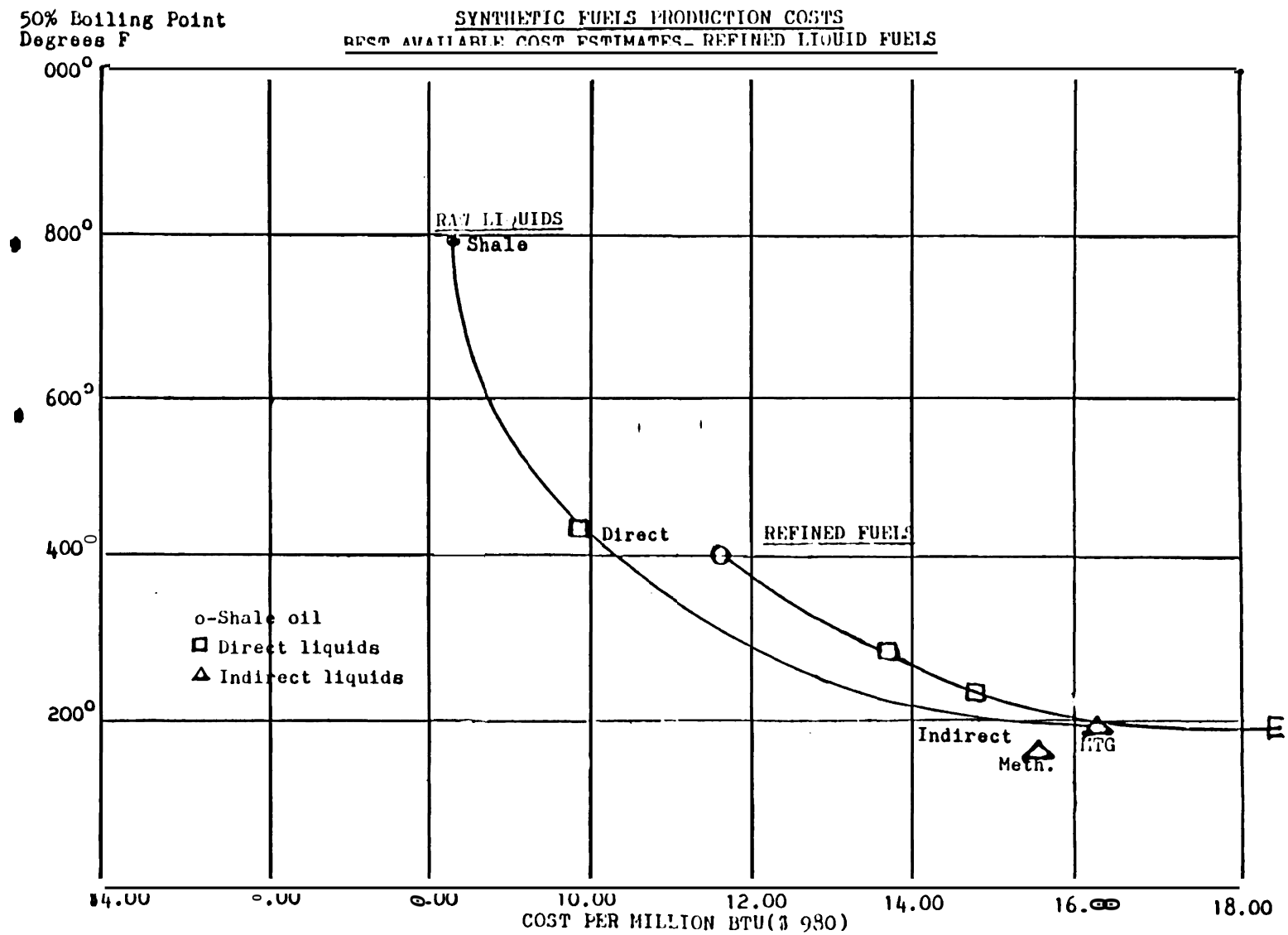

SOURCE: E. J. Bentz & Associates, Springfield, Virginia

EXHIBIT 4-18

DIRECT LIQUIDS (SRC-II) REFINING

(50,000 BBL/Day) 1980 $ per BBL.

$/BBL	Motor Gasoline (Hydrotreat Plus Hydrocrack)		Motor Gasoline Plus Jet Fuel (Severe Hydrotreating)		Motor Gasoline Plus #2 Oil (Moderate Hydrotreat)	
Operating Labor	.244		.183		.183	
Maintenance	.791		.669		.487	
G&A	.852	1.887	.670	1.522	.487	1.157
Fuel	.183		.304		.122	
Utilities	.183		.122		.122	
Cat. & Chem.	.304		.365		.244	
Hydrogen	5.540	6.210	5.750	6.541	3.230	3.718
Capital Recovery @ 30%/Yr.		12.603		10.228		7.67
		$20.70		$18.291		$12.545

SOURCE: E. J. Bentz & Associates

EXHIBIT 4-19

SRC II REFINED TO PRODUCT COSTS

		Barrels/Day		Cost/BBL*	Total Daily Cost
CASE I	Motor Gasoline	50,000	@	$87.17	$4,358,500
CASE II	Motor Gasoline	15,395	@	87.17	1,341,982
	Jet Fuel	34,605	@	(83.69 **	(2,896,018)**
	Total	50,000	@	$84.76	$4,238,000
CASE III	Motor Gasoline	16,995	@	$87.17	$1,481,454
	#2 Oil	33,005	@	(74.74)**	(2,466,796)**
	Total	50,000	@	$78.965	$3,948,250

Product Costs

Motor Gasoline	=	$87.17/bbl (4.95)	$17.61/MM BTU
Jet Fuel	=	$83.69/bbl (5.67)	$14.36/MM BTU
#2 Oil		$74.74/bbl (5.825)	$12.83/MM BTU

*Cost from 4-17 plus 4-9.

**Values in parenthesis inferred from weighted average value of motor gasoline and total product.

SOURCE: E. J. Bentz & Associates

for a lower grade (by) product. The method used is entirely an assignment of marginal cost to products. It would be more desirable to operate in a reverse manner, i.e., from the lowest product, assigning incremental costs to the higher product on a marginal basis. We, unfortunately, do not have a process estimate for a single slate of the lowest value product. The distillation range of all products is too broad to produce such an artificiality. Therefore we have begun with the marginal gasoline cost and assigned it as a by-product price to the lower value (mixed) slates, permitting us to infer the marginal cost of the lower grade products.

The results of this cost analysis are related to the costs of indirect liquefaction end products and shale products on Exhibit 4-20. The cost series increase as average distillation point is lowered. The average distillation point of most useful transportation fuels lies between 180° - 400 F, with the majority of the compounds contained lying within this range.

There is a persistence of the earlier noted relationship between product quality (as measured by average boiling point) and production costs of finished products. The relationship shows less than unitary cost increases per barrel, all greater then unitary cost increases per million BTU. The latter case is due to the generally lower heating value of the premier fuels that have increased hydrogen content. The increases in cost are about 7 1/2cents per barrel of liquids for every degree farenheit that the boiling range is lowered.

Exhibit 4-21 is a flow sheet of a process (examined by Chevron Research) for hydrotreating and hydrocracking of direct coal liquid (SRC-II) whole oil to produce 100% motor gasoline product. This is the first case on Exhibit 4-16. Exhibits 4-22 and 4-23 illustrate the refining process used to upgrade the whole liquid to ‘ gasoline and jet fuel by severe hydrotreating alone, and to a lower quality slate of gasoline and heating oil created by less severe hydrotreating of direct (SRC-II) liquids.

The latter case is more comparable to an upgrading process.

4.7 TRANSPORTATION AND OTHER INFRASTRUCTURE COSTS (Reference 41)

Although we have differentiated between coal liquid’s plant site upgrading facilities and finished product refineries, we have really not selected the site for refining. The upgrading must in most cases be done at the site of the coal liquids plant. The degree of upgrading we have embraced (Exhibit 4-15) is sufficient to permit the fuels to be used in as high a use as a combustion turbine, or transported without creating contamination or incompatible sediments.

Transportation costs are directly related to the distance involved, and indirectly related to the quantity moved or flow rate.

EXHIBIT 4-20

SYNTHETIC FUEL LIQUIDS

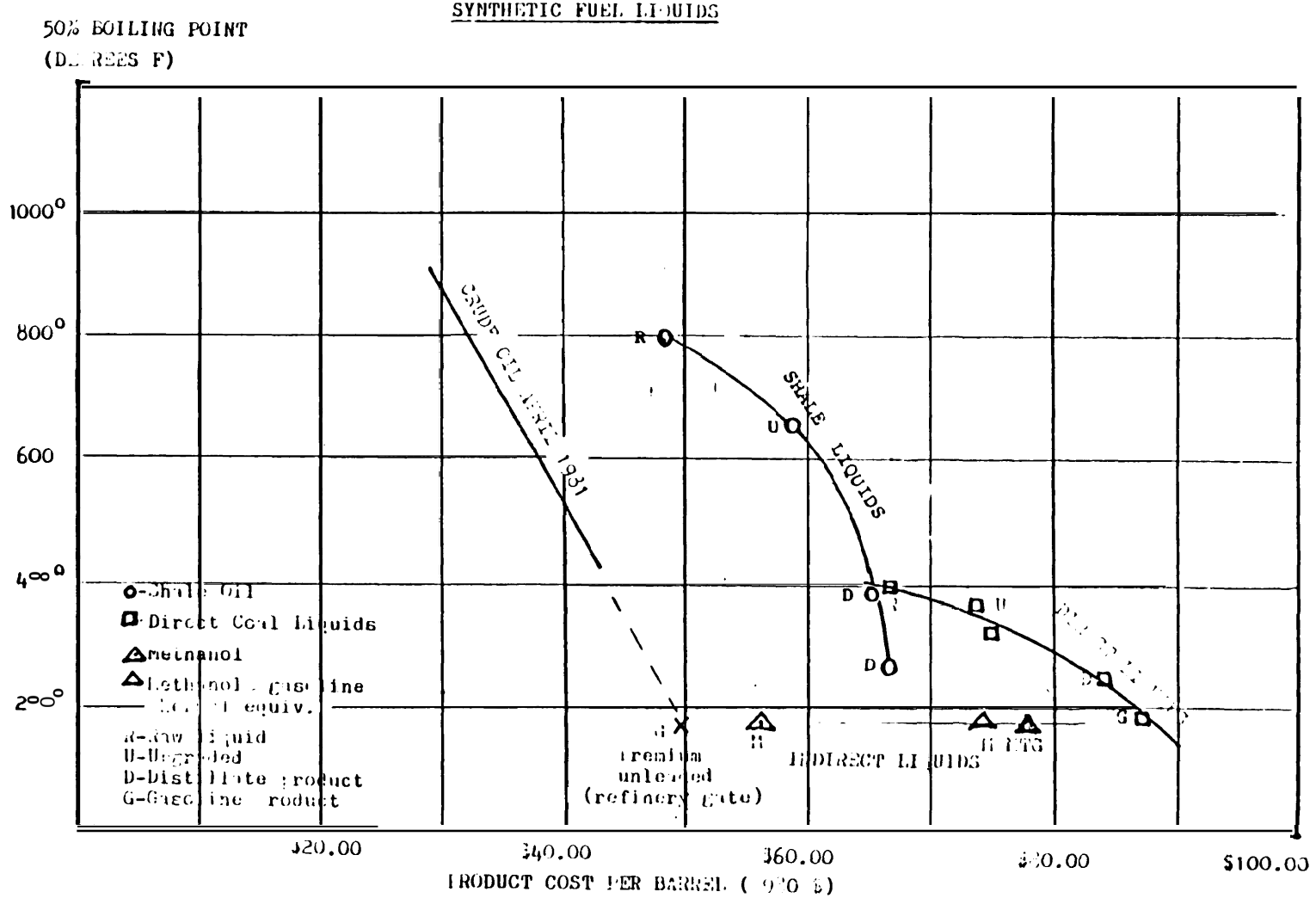

SOURCE: E. J. Bentz & Associates, Springfield, Virginia

EXHIBIT 4-21: SCHEMATIC FLOW DIAGRAM
REFINING OF SRC-11 OIL BY
. HYDROTREATING AND HYDROCRACKING - CASE I

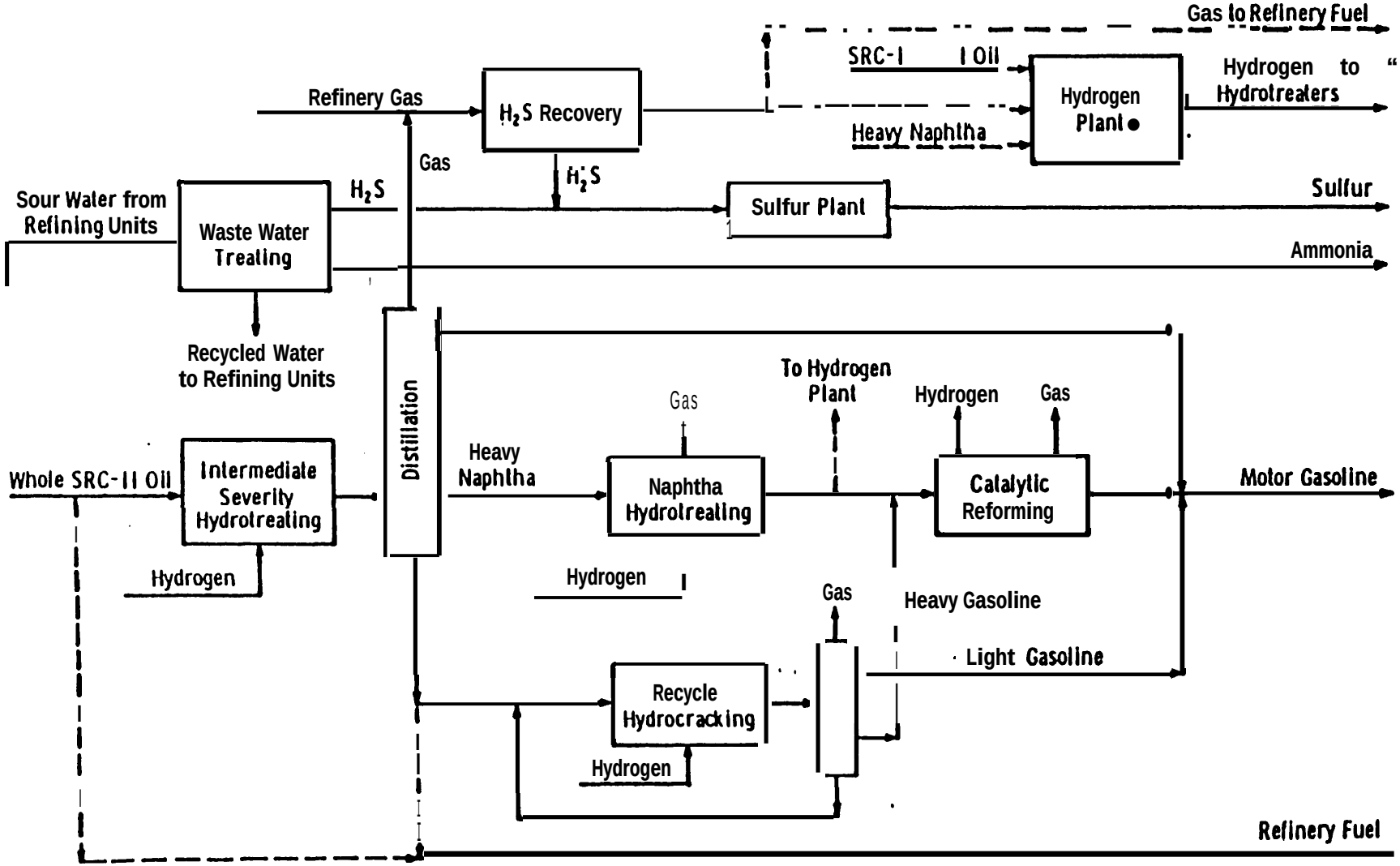

* Steam reforming feeding gas and anphtha in Cases 4A, 4B, and 4D.
Partial oxidation feeding SRC-II oil in Case 4C.

SOURCE : Department of Energy

EXHIBIT 4-22:

SCHEMATIC F1OW DIAGRAM
REFINING Of SRC-II OIL BY
HIGH SEVERITY I{ YDROTREATING - CASE II

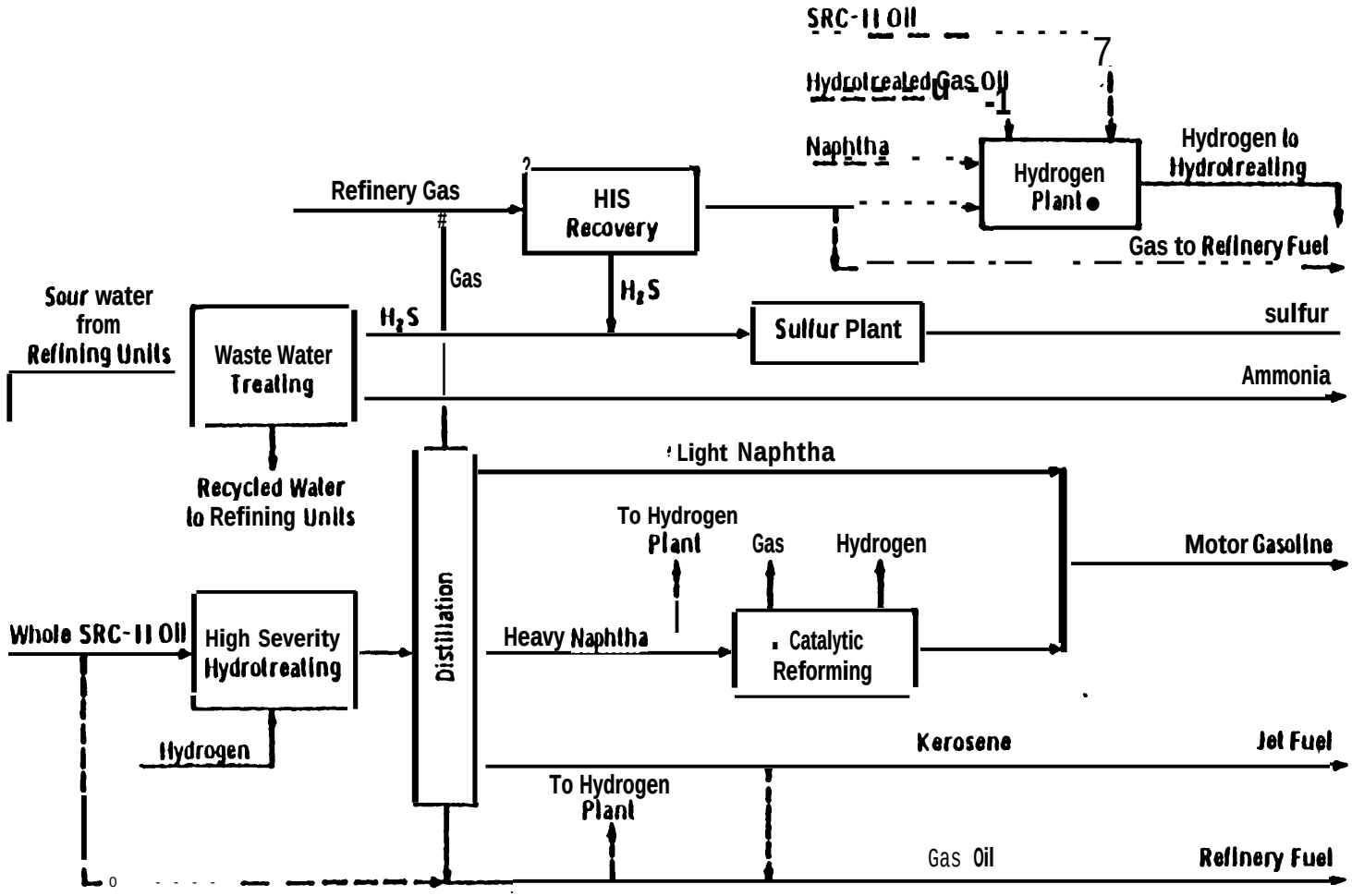

● Steam reforming feeding gas and naphtha in Cases IA, IB, and ID
Partial oxidation feeding gas oil and SRC-I I oil in Case IC.

SOURCE : Department of Energy

ejb&a

EXHIBIT 4-23: SIMPLIFIED FLOW DIAGRAM
REFINING OF SRC-II OIL BY
MODERATE SEVERITY HYDROTREATING - CASE III

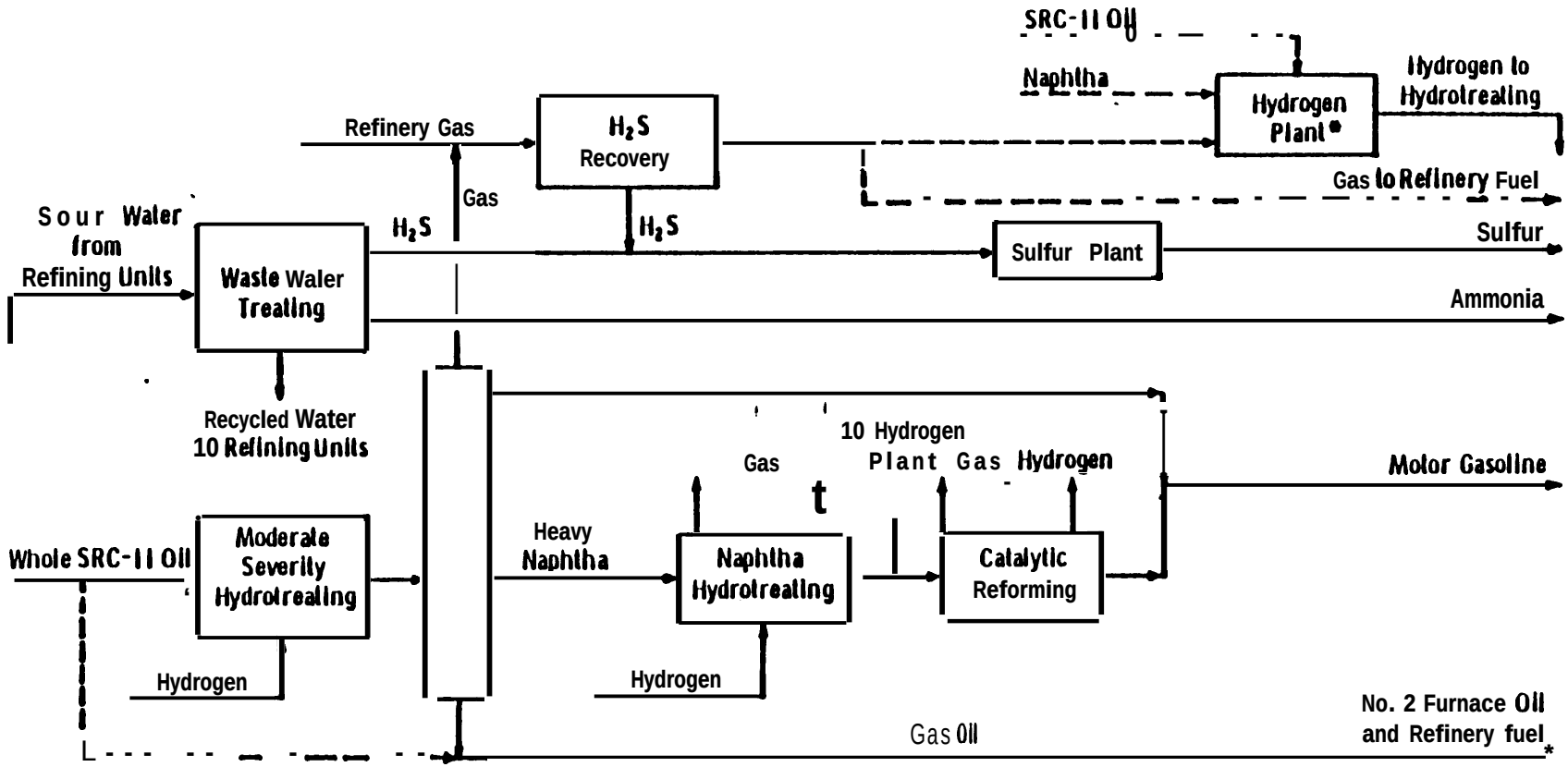

* Steam reforming feeding gas and naphtha in Cases 5A, 5B, and 5D.
Partial oxidation feeding SRC-II oil in Case 5C.

SOURCE : Department of Energy

e.b&a

We cannot visualize any other form of transportation for these upgraded liquids, or for further refined products except by pipeline. The daily volume required to support a **6"** or **8"** pipeline is approximately the size of one or two 50,000 bbl/day plants. Considering the geographical concentration of coal and shale deposits it is not difficult to visualize a mining-conversion center adequate to support either:

. An upgraded liquids pipeline to a refining center

or

. A product pipeline to major pipeline junctions or product distribution terminals

The general location of all coal and shale resources is such that deep draft water transportation does not figure prominently in synfuels distribution patterns.

Without siting specific plants and conducting the refinery trade-offs - which would have to be done in context with both the balance of foreign and domestic petroleum supplies and the slate of (regional) demand for all liquids - we cannot develop very meaningful insights into either the operating (product) costs of transportation and distribution, or the capital requirements.

We will have to make some nominal assumptions and then establish unitary relationships. The future energy transportation patterns and infrastructure requirements are impossible to determine without a specific scenario. We shall briefly examine a *cases:

. Pipelining from Souther Illinois to Houston of syncrudes.
. Pipelining from Wyoming to St. Louis
. Pipelining from Western Colorado to L.A. of shale oil.

Southern Illinois to Houston		
Raw Liquids (upgraded)	**33c/MM**	BTU
Western Colorado to L.A.		
Shale Liquids	**40$/MM**	BTU
Wyomina to St. Louis		
Raw Liquids	**30 $/MN!**	BTU
Methanol	**68c/MM**	BTU
MTG - Gasoline	37$/MM	BTU

The additional capital investment required for synthetic fuel transportation is highly speculative to a greater degree. There

is a great deal of existing product and crude liquid pipeline as well as gas pipeline in place, that can equally serve the synthetic fuels industry. In all cases the pipelines are connected to either markets or distribution terminals at the delivery end. In most cases, the input end is originally either at a major refinery (and production) location or at a port location. The refinery connection argues for upgrading of liquids (coal and shale) at mine mouth conversion plant locations, and transportation to the existing refinery districts for product finishing. Such a general pattern would involve the construction of a minimum number of new "crude" synfuel pipelines from coal fields to refining districts.

We assume that the ultimate conditions would lead to the construction of several large diameter pipelines in such a pattern.

Methanol, which does not require refining, obviously will move in different patterns from coal field to the major terminals and markets.

Pipelines of that size (10-12") would cost an average of $100,000 per mile, considering material, labor, and right of way and other expenses. Terrain would influence the cost, generally increasing construction costs but reducing right of way costs in some cases by an equivalent amount. 20" or greater diameter pipelines would cost $250,000/mile.

A total construction budget of 50,000 miles of new pipeline of 12" diameter to 20" diameter would cost between $5 billion and $12 billion.

4.8 ADDENDUM TO CHAPTER 4: BASIS FOR COST ASSUMPTIONS

1) Basic Conversion Plant (ESCOE)

- Capital Costs

Year: Mid (June-July) 1979 dollars
Scale: 25,000 tons of coal input
Base Plant to installed battery limits: 1.63
Contingency: 10%
Scaling exponential rule: $\frac{C_2}{C_1} = G$

λ = .65 for vessel size
λ = .9 with trains

Outlay of Capital: instantaneous plant

- Revisions to Capital Assumptions in This Report

Year: Mid 1980 (June-July)
Scale: 50,000 bbl/day liquids output
Plant to Battery Limits: 1.73
Contingency: 20%
Scaling: Linear
Outlay of Capital: Instantaneous plant

- Operating costs

Coal Feedstock: $30/ton (delivered)
Coal: Illinois #6
Catalysts and Chemicals and Operating Supplies: at cost for amounts proscribed by process designer's material balance.

- Labor Cost

	#		Rate/Hr
Plant Operators	120		$ 10.00
Operating Supervisors	25		15.00
Maintenance Labor	150		12.00
Maintenance Labor Supervisors	30		16.00
Administration	30		11.00
Total	355	@	$11.79/hr avg.

Fringes @ 35% --changed to 40% = total labor rate of $16.50/hr

Maintenance Cost (Materials & Contracts)

3% of total plant capital cost

G & A

Local taxes and insurance, 5% capital cost
changed to total G&A - 5% capital cost

Capital Charge Rate

ESCOE basis not used. 30% of capital used as recovery rate (as per guidance of OTA staff) .

On-Stream Rate

90%--328.5 days/year

2. Assumptions for Product Upgrading

- Capital

  Basis --Instantaneous Plant, mid-1980 dollars
  On-stream factor 90% 328.5 stream days.

- Hydrotreater

  capitalized for each separate product stream.

- Hydrogen Feedstock Plant Capital

  Not included, only cost feedstock "across the fence" from the plant complex.

- Hydrogen Reformer or manufacturing plant capital included

- Battery Limits

  Includes hydrotreaters, waste water treatment, sulphur plants (commercial grade)

- Contingency

  General -- 25%
  Battery Limits--l5%
  Engineer---4% of investment capitalized
  Working Capital--45 days receivables; 30 day chemicals catalysts; 30 day feedstocks

- Operating costs

  Hydrogen Feedstock: Syngas @ $6.74/mmbtu raw gas liquids @ $6=50/mmbtu includes recovery of production plant capital.

  Hydroqen Pressure: 500 PSIG for SRC light (naptha) product --2000 PSIG all other cases.

  Plant Size: 20,000 bbl/day upgraded to 50,000 bbl/day for each product cut

- Royalties

500 PSIG Hydrotreating	-o-
1500 PSIG Hydrotreating Fixed Bed	$30/bst feed
Sulphur plant	-o-
Waste Water	
Initial project	$75,000
First 5,000 units	$14.70\unit
Next 5000-25,000 units	$7.35/unit
Next 25,000 + units	$5.25/unit

- Sales Tax

  5% of equipment cost

- Maintenance

  4% of depreciated capital/year

- Operating Labor

  $11.00/hr

- Labor Burden

  45%

- Administrative and Support Labor

  30% of operations and maintenance labor

- G & A

  60% of operations and maintenance labor plus property-tax of 2-1/2% of plant investment

ejb&a

- Utilities

  Fuel $4/mmbut
  Steam $3.50/1000 lbs
  Electricity 4c/kwh
  Water (make-up) 40c/1000 gal

- Hydrogen Bleed was assumed to be:

  50 SCP/bbl @ 500 PSIG
  100 SCP/bbl @ 2000 PSIG

- By-product Credits

  Ammonia (anhydrous) $100/ton
  Hydrogen and Hydrocarbon off gasses (C_1-C_4)
  $4/mmbtu ($1. **30/MSCF)**

3. Refining Cost Assumptions (Chevron Basis)

   - 1980 costs: Instantaneous plant (first quarter adjusted to June/July)
   - Mid-Continent Location
   - Cost correlations based on actual experience of Standard Oil of California, 1960-1970s adjusted for:

     Lower field productivity
     Increased safety
     Improved efficiency and reliability
     Additional energy conservation
     Stricter environmental regulations

   - 10% Contingency
   - Utilities

     Water 30c/1000 gal
     Boiler fuel, coal or refinery fuel power 3$/kwh

   - Maintenance

     2-1/2%/yr of both on-plant and off-plant facility investment

   - G&A

     Property taxes @ 21/2% of both on-plant and off-plant/yr

   - Labor

     Operating-- $110,000 per shift position/hr ($18.30/hr including fringes)
     Support Labor (Administrative, security, technician) 65% of Direct Labor

CHAPTER 5: SUPPLY DEPLOYMENT SCENARIOS FOR SYNTHETIC FUELS

Section No.		Page
5.1	Factors and Constraints Affecting Synfuel Development.	5-1
5.2	Constraining Factors in the Transition Period: 1980-2000	5-3
5.2.1	Equipment Problems.	5-4
5.2.2	Critical Materials.	5-6
5.2.3	Manpower.	5-6
5.2.4	Coal Supply	5-9
5.2.5	Water Supply.	5-13
5.2.6	Environmental Health and Safety	5-13
5.2.7	Siting.	5-14
5.2.8	Transportation.	5-15
5.2.9	Tradeoffs	5-15
5.3	Development of Supply Deployment Scenario and Comparisons With Other Estimates . .	5-17
(A)	Shale Oil Scenario.	5-17
(B)	Coal Gases Scenario	5-23
(C)	Coal Liquids.	5-32
(D)	Summary Tables and Comparisons. . .	5-38
5.4	Labor Requirements Associated With The Scenarios.	5-42
5.4.1	Operations Labor Needs.	5-42
5.4.2	Construction Labor Needs.	5-44
5.4.3	Regional Deployment of Synthetic Fuel Plants Work Force.	5-49
5.5	Additional Concerns and Impacts: Product Acceptability Concerns	5-50
5.6	Footnotes to Chapter 5.	5-53

CHAPTER 5 : SUPPLY DEPLOYMENT SCENARIOS FOR SYNTHETIC FUELS

5.1 Factors and Constraints Affecting Synfuel Development

In order for synthetic fuels to play a role in increasing domestic energy supplies, they must become available in sufficient quantities, at competitive prices, in a reasonable time frame. This is particularly true for transportation's needs for liquid fuels. With a relative lack of fuel switching capability, transportation more than other sectors (e.g., utility fuel switching to coal) must depend on increased conservation, expanded domestic crude production, and alternate liquid fuels.

The central driving forces that characterize the development of a synthetic fuel industry are (Reference No. 4 2):

(a) Depletion and cost escalation of conventional domestic energy supplies;

(b) Shortages of environmentally acceptable fuels;

(c) Constraints imposed on alternate energy systems;

(d) The presence of existing, easily modified fuel distribution systems;

(e) A seemingly chronic negative imbalance in foreign trade and payments accounts;

(f) National security; and

(g) Governmental incentives (such as those proposed under P.L. 96-126 and the National Energy Security Act) .

The central concerns are:

(a) Technological and economic factors

- product costs/markets (interfuel competition)
- Status of technology and technological risk
- Financial risk
- Capital availability

(b) Environmental and social factors

- Air quality
- Water quality
- Land reclamation
- Social dislocation

(c) Availability of resources

- Energy resources
- Water resources
- Land/site availability
- Skilled work force

(d) National, State, and local policies, especially regulatory, taxation, and subsidy policies.

Key among the requirements that characterize these concerns are:

(a) Technological needs
(b) Significant lead times
(c) Relative costs

In Chapter 3, we have looked at the technological needs; and in Chapter 4 we have looked at the relative costs. In this chapter we will focus on the "staging" over time of these technologies, so that we can appreciate the necessary lead times. In doing so we will attempt to develop realistic "bottoms-up" assessments for each generic fuel class.[a] These"scenario# will be a 'business-as-usual" assessment, and a high "pushing-the-limit" assessment.[b] In developing these scenarios we have felt it crucial to build upon concrete actual data and engineering plans for each project class, rather than "top-down" estimates of aggregate growth.[c] We also felt it necessary, as explained in the introduction, to limit our supply deployment scenarios to the year 2000, which reflects the upper limit of sound engineering judgment and actual/proposed plans. Post 2000 considerations are more dictated by an assessment of economic forces and prospective product markets rather than supply constraints.[d] The supply constraining forces of the "transition" period (1980-2000) reflect industrial 'build-up" times and constraints, rather than product demand shifts.[e] Post 2000 considerations must consider demand shifts, end-use technology changes, and he introduction of other technologies (e.g., solar) .[F] This necessitates a macro-economic long-term forecast approach rather than a supply deployment scenario approach.[g]

Because of the significance of "transition" period[h] constraints in realizing deployment schedules, it is useful to discuss these constraints prior to our development of the scenarios. In the following section we will discuss the key constraints. Following this discussion, we will present the actual assessments developed and compare them with other assessments referenced in the literature.

5.2 Constraining Factors in the Transition Period: 1980-2000

The construction of one 50,000 barrel per day synthetic fuel facility is a massive effort requiring huge dollar, manpower, and material inputs plus the management skills to integrate all these inputs into a workable system. Constructing a major synfuels industry multiplies the problems, introduces added complexity, and increases the probability that constraints of varying degrees will impact the schedule, cost or feasibility of success.

Any Us. proposed synfuels construction program will have to compete for manpower and other resources with related construction demands from the oil and chemical fields. U.S. refineries are undertaking a major upgrading program to enable existinq refineries to handle lower grade high sulfur crude and to increase efficiency in producing full product slates with less energy waste. Fluor Corporation is predicting that U.S. refineries will initiate $20 billion in construction programs in 1980, contrasted with a yearly average of only $2 billion in the late 1970s. (Reference No. 43) Proceeding with the Alaskan Natural Gas Pipeline could require $20 to $25 billion in new construction costs. Similarly, the chemical industry is modifying its petrochemical plants in recognition of dramatically higher feedstock costs. The situation is further compounded by gigantic increases in construction programs abroad. For example, Saudi Arabia appears intent on pursuing a five year $335 billion program of new refinery and petrochemical construction. These construction programs will use the same international construction companies, technical skills and equipment as will be required for U.S. liquid synfuels construction. (Reference No. 43).

The purpose of this section is to discuss the range of potential constraints to the development of a viable liquid (and gas) synthetic fuels industry in the U.S.

This discussion of constraints is organized into the following categories:

Equipment	availability-- supply constraints performance constraints
Critical Materials	
Manpower	technical laborforce construction laborforce
Coal Supply	
Water Supply	

- Environment, Health and Safety — standards and requirements, permits and licenses
- Siting — physical location, infrastructure problems
- Transportation
- Technology Uncertainties
- Financial/Capital Availability
- Economics — operating costs, product costs

Chapter 3 has already covered the technologies, and Chapter 4, the economics. Capital availability has not been discussed here in this report. Additional assumptions on monetary policy and macro-economic policy over the next 20 years will be needed to consider this topic.j

5.2.1 Equipment Problems

Seven different types of equipment which might cause supply constraints have been identified as follows:

Availability - supply Constraints

1. Pumps: Demand for pumps in synfuels plants will be very large. However, for small pumps, less than 1000 hp, there should be an adequate supply since producers could expand to three shift operations and European and Japanese manufacturing is available (Reference No. 44)= Large reciprocating pumps would be in very short supply assuming that existing baseline demand persists. The synfuels industry could require between 50% and 100% of current world production capacity (Reference No. 44).

2. Heat Exchangers: Demand is expected to exceed 25% of total domestic and foreign production capacity (Reference No.45). However, the industries' ability to increase capacity is reasonably good. The limiting factors would be availability of welders and of heat-treated metal plate from primary suppliers (Reference No. 44). Without firm orders, the heat exchanger manufacturers are reluctant to expand productive capacity.

3. Compressors and Turbines: Like heat exchangers, demand for compressors and turbines by synfuels plants could exceed 25% of existing production capacity (Reference No. 45). Traditionally, there is a two year lead time for these equipments. Manufacturers have expressed confidence that they can meet peak demand in 1984. (Reference No. 44) However, failure to order well in advance of need could cause delays and escalate costs.

4. Pressure Vessels and Reactors: Although synfuels demand will exceed 25% of productive capacity, suppliers are confident that they can meet demand (Reference No. 45). There is slack in the system due to slow economic growth and the absence of demand for nuclear reactor vessels (Reference No. 43).

5. Alloy and Stainless Steel Valves: Demand for specialized valves will exceed 25% of current productive capacity (Reference No. 45). Manufacturers' ability to expand productive capacity hinges on:

   - adequate lead planning time
   - availability of chromium, molybdenum and cobalt
   - availability of quality castings and forgings
   - availability of qualified machinists (Reference No. 44)

6. Draglines: Draglines, which are essential for coal surface mining operations, have a lead time of 2-2-1/2 years. However, no production constraints are likely if firm orders are placed in advance of need.

7. Air Separation (Oxygen) Equipment: Reference No. 46 identified air separation plant fabrication capacity as the "most severe single constraint." The critical components identified were aluminum distillation towers which are currently shop fabricated and brazed aluminum heat exchangers used in these towers. Techniques for field fabrication (to maintain quality control) have not been perfected. Development of acceptable field fabrication could reduce this potential constraint. Added reliance on production in Western Europe and Japan could also help, assuming that transportation facilities were available.

8. Distillation Towers: A specially constructed facility.

The accompanying Exhibits 5.1 and 5.2 (Reference Nos. 44) summarize the equipment supply constraints for a 1 MMBD and a 3 MMBD scenario (2000);[k]

Performance Constraints--the possible failure to perform to specifications at operating conditions.

Concerns with ability to meet specific performance standards have been expressed for five categories of equipment as follows:

1. Gasifiers
2. Extractors
3. Hydrotreaters
4. Oxygen compressors
5. Coal slurry heaters

The available operational data for these five categories of equipment are from useages in process environments which are significantly different from the coal conversions regimes in liquid synfuels facilities. Substantial development will be required to modify and/or scale up equipment currently in commercial use (Reference No. 47). Therefore, these five categories of equipment impose potential constraints to the synfuels industry which would result from equipment failure or substandard performance.

5.2.2 Critical Materials

Materials critical to the synfuels program are cobalt, nickel, molybdenum and chromium. After two independent analyses, only chromium was identified as a potential constraint (Reference NO.44,46) . U.S. currently imports over 90 percent of its chromium use and will remain highly dependent on foreign supply. Demand for chromium by synfuels programs could reach 7% of total U.S. demand. Exhibits 5.1 and 5.2 depict this concern.

5.2.3 Manpower

Technical Laborforce

Engineering design manhour requirements for construction of synfuels facilities are 1.5 to 3 times greater than those

EXHIBIT 5.1 (Reference 44)

POTENTIALLY CRITICAL MATERIALS AND EQUIPMENT REQUIREMENTS FOR COAL LIQUIDS PLANTS AND ASSOCIATED MINES

(3MMBPD Scenario)

Category	Units	Peak Annual Requirements	Us. Production Capacity	Requirements Percent of Production
Chromium	tons	10,400	400,000[1]	3
Valves, alloy and stainless steel	tons	5,900	70,000	8
Draglines	yd	2,200	2,500	88
Pumps and drivers (less than 1000 hp)	hp	830,000	20,000,000	4
Centrifugal Compressors (less than 10,000 hp)	hp	1,990,000	11,000,000	18
Heat Ex-changers	ft^2	36,800,000	50,000,000[2]	74
Pressure Vessels (1.5-4" Walls)	tons	82,529	671,000	12
Pressure Vessels (greater than 4" wall)	tons	30,785	240,000	13

[1] Current consumption

[2] Total for surface condensers, shell and tube, and fin-type.

ejb&a

EXHIBIT 5.2 (Reference 44)

Table 1-8

SELECTED MATERIAL AND EQUIPMENT ITEMS REQUIRED TO MEET PROJECTED COAL LIQUIDS PLANTS (AND ASSOCIATED MINE) NEEDS

Category		* Peak Annual Requirement and Year				Production Capacities			
		1 MMBPD Scenario		3 MMBPD Scenario		US	Japan	Europe	Total
Stainless Steel	(tons)	81,733	(1986)	52,299	(1986)	1,954,000	1,988,000	N/A	3,942,000+
Aluminum	(tons)	2,705	(1985)	6,443	(1985)	4,800,000	N/A	N/A	8,736,000
Chromium	(tons)	4,364	(1985)	10,409	(1985)	400,000(1,2)	N/A	N/A	N/A
Nickel	(tons)	756	(1986)	1,805	(1986)	114,000	72,000(3)	35,000	221,000
Cast Iron	(tons)	23,195	(1986)	55,610	(1986)	18,200,000	979,000	10,648,000	27,827,000
Iron and Steel Forgings	(tons)	5,766	(1985)	14,323	(1986)	1,416,000(1)	867,000	2,681,000	4,964,000
Steel Plate > 1.5"	(tons)	26,647	(1986)	63,767	(1985)	1,900,000	14,000,000	1,540,000	17,440,000
Pipe, Alloy and Stainless Steel	(tons)	9,818	(1999)	24,545	(1999)	1,852,000(1)	3,000,000	2,176,000	7,028,000
Valves, Alloy & Stainless Steel	(tons)	2,481	(1985)	5,892	(1984)	70,000	68,000	97,000	235,000
Reinforcing Bar	(tons)	23,503	(1985)	64,886	(1985)	6,187,000(1)	14,436,000	10,161,000	30,784,000
Draglines	(yd^3)	810	(1987)	2,198	(1987)	2,500	N/A	N/A	N/A
Pumps & Drivers < 1,000 hp	(1,000 hp)	343	(1985)	830	(1984)	20,000	N/A	N/A	N/A
Centrifugal Compressors & Drivers > 10,000 hp	(1,000 hp)	194	(1985)	481	(1984)	15,000	N/A	N/A	N/A
Centrifugal Compressors & Drivers < 10,000 hp	(1,000 hp)	833	(1985)	1,989	(1984)	11,000	N/A	N/A	N/A
Heat Exchangers	(1,000 ft^2)	15,260	(1986)	36,780	(1985)	50,000	82,000	N/A	132,000+
Non-Nuc Pressure Vessels 1.5-4" wall	(tons)	33,677	(1985)	82,529	(1984)	671,000	223,000	132,000	1,026,000
Non-Nuc Pressure Vessels > 4" wall	(tons)	12,314	(1995)	30,785	(1999)	240,000	254,000	99,000	604,000
Boilers	(MM lb/hr)	8	(1985)	19	(1985)	210	N/A	N/A	N/A

N/A = Not available

1) Current consumption
2) US dependent upon foreign supplies
3) Includes other Asian countries

*Peak refers to maximum annual requirements

SOURCE: E. J. Bentz & Associates

needed for refinery construction. Indirect synfuel processes are the most engineering intensive since they are, in effect, two separate systems, 'e.g., gasification and synthesis. However, even the direct liquefaction process requires significant amounts of engineering design manpower (Reference No. 45). The need for chemical engineers would be the area of greatest concern. Under a scenario projecting 3 million B/D by the year 2000, demand for chemical engineers increases significantly between now and 1985 (Reference No. 440. An additional 1300 chemical engineers representing a 35% increase in this specialty, i.e. , a 35% increase in the process engineering work force, as found in previous design and project work at present (in 1979: 3600 chemical engineers) in less than six years would be required for the synfuels program= Engineering schools can generate new inexperienced chemical engineers to meet this demand and qualified chemical engineers will remain a scarce and expensive commodity. Demand for other engineering skills will also increase but at a more manageable rate. It should also be realized that potential growth in other sectors--such as defense needs for engineering and construction skills--may also place an added demand On skill availability.

Construction Laborforce

Skilled craftsmen such as welders, boilermakers, pipefitters and electricians are already in short supply. These shortages have been exacerbated over the last decade by increasing reluctance on the part of craftsmen to follow construction work and relocate. Since many of the synfuels development projects would be located in areas with existing overall manpower shortages and virtually no existing pool of skilled manpower, labor could become a significant constraint. Using the 3 million B/D scenario, this industry would require 73,000 construction employees in 1986, the peak year. This is approximately 2% of the entire construction employment force (Reference No. 44). More training programs and use of "nonjourneymen" or "helpers" to supplement the workforce could reduce potential shortages. Recruitment of women and minorities would help also. However, some of these steps might be opposed by labor unions. Labor unions are particularly concerned that open-shop (non-union) construction companies will gain a foothold in this program. The accompanying Exhibits 5.3, 5.4 and 5.5 (Reference No. 44) , summarize the construction manpower requirements under the 1 MMBD and 3 MMBD scenarios.

5.2.4 Coal Supply

Chapter 2 has discussed U.S. coal supplies. In brief, the U.S. coal industry currently has approximately 100 million tons of productive capacity which is not being used. In addition, the coal industry traditionally has

EXHIBIT 5.3 (Reference 44)

TOTAL ENGINEERING MANPOWER REQUIREMENTS
FOR COAL LIQUIDS PLANTS AND
ASSOCIATED MINES

3 MMBPD SCENARIO
(Persons)

Scenario	1984	1990	2000
All Engineering Disciplines			
Design and Construction	8,500	5,200	6,300
Operation and Maintenance		2,200	4,800
Total	8,500	7,400	11,100
Chemical Engineering			
Design and Construction	1,300	740	920
Operation and Maintenance		1,050	2,250
Total	1,300	1,790	3,170

ejb&a

EXHIBIT 5.4 (Reference No. 44)

PROJECTED PEAK CONSTRUCTION LABOR REQUIREMENTS
(Persons)

Craft	1 MMBPD Scenario (1987)	3 MMBPD Scenario (1986)
Pipefitters	7,170	**16,920**
Pipefitters-Welders	2,400	**5,600**
Electricians	3,020	**7,190**
Boilermakers	660	**1,570**
Boilermaker-welders	130	**310**
Iron Workers	1,760	**4,250**
Carpenters	2,700	**6,400**
Other	12,830	**30,660**
Total	30,670	72,900

ejb&a

EXHIBIT 5.5 (Reference No. 44)

REGIONAL MANUAL LABOR FOR CONSTRUCTION AND MAINTENANCE FOR COAL LIQUIDS PUNTS AND ASSOCIATED MINES

Craft	Current Union Craftsmen	Coal Liquids Program Peak Requirements[2]	
		3 MMBPD Scenario	1 MMBPD Scenario
Pipefitters (including welders)			
East North Central and East South Central Regions	37,672	10,300	6,300
West North Central and Northern Mountain Regions	14,498	11,800	6,900
Boilermakers (including welders)			
East North Central and East South Central Regions	5,260	900	500
West North Central and Northern Mountain Regions	2,075	1,100	600
Electricians			
East North Central and East South Central Regions	36,860	3,300	2,000
West North Central and Northern Mountain Regions	12,662	3,700	2,200

[1]Source: Construction Labor Research Council

[2]Source: Obtained by computer run of Bechtel Corporation Energy Supply Planning Model, as described in reference 44.

ejb&a

surge capacity which is brought on line whenever the spot price of coal increases sharply. The lead time for opening up new mine capacity, both surface and deep, ranges between three and five years. Since the construction of major synfuels plants takes the same length of time, adequate new coal supply can be brought on line in a timely fashion. Finally, the U.S. coal resource is so large that it is very unlikely that there would be supply shortages over the next century. For all these reasons, coal supply poses no constraint to synfuels development.

5.2.5 Water Supply[m]

Chapter 2 has discussed water supply concerns. Also reference 31 discussed these in detail. In brief, while the U.S. has abundant water supplies in aggregate, there are certain specific geographic locations where water supply could become a constraint to development of a large synfuels program. This is particularly true in the semi-arid portions of the West where significant coal reserves are located.

> [17] . . sufficient water physically exists to support a significant-sized synfuel industry in the Upper Missouri and Upper Colorado River Basins, the primary western fuel resource areas." (Reference No. 33)

The problems with water supply in these areas are institutional and highly political and often emotion-laded. Thus far energy developers have been able to purchase water rights from farmers or Federal and State water impoundments. As long as a relatively full market exists for the transfer of water rights, energy developers can afford to bid away the required water supply. In addition, corporate planners will need to consider water supplies for the construction/operating laborforce, their families, and the communities which will support them.

5.2.6 Environmental Health and Safety

Standards and Requirements

The liquid synfuels technologies "appear to have no absolute environmental protection constraint that would universally limit or prohibit deployment." (Reference No. 33) However, the direct liquefaction processes have some potential to expose workers or the public to toxic and carcinogenic materials. Such risks could be judged politically and socially unacceptable and could

become a development constraint. The Prevention of Significant Deterioration program under the Clean Air Act could pose absolute limits to the number of plants able to locate in a specific geographic area since the allowable increments of ambient air quality could be fully utilized. In the case of oil shale where the resource base is concentrated in a specific area in and adjacent to Northwest Colorado, PSD limits are very likely to constrain the number of facilities permitted. These limits, still to be developed, have not yet been set. Ranges of capacity vary, however, on what is possible." In addition,

> "Some yet-to-be-defined regulations, if promulgated in their stringent forms, appear capable of severely limiting a number of synfuel technologies. These regulations include air quality emission control measures for visibility, changes in the original prevention of significant deterioration (PSD) regulations, extension of PSD limiting increments to other pollutants, short-term nitrogen oxide ambient standards, development of hazardous waste tests and regulations and special waste regulations, toxic product regulations, and occupational safety standards. " (Reference No. 33)

A detailed assessment of the environmental, health, and socio-economic impacts is found in reference no. 31 .

Permits and Licenses

The permitting and licensing process is complicated and time consuming. However, it poses no direct constraint on the synthetic fuels deployment program. The process generates procedural delays and provides multiple access to various public interest groups opposed to specific projects, specific technologies, or specific sites. More importantly, the process can be used by local political jurisdictions to either force project relocation or extract concessions from the project developers. Permit considerations are specifically discussed in the project discussions to follow.

5.2.7 Siting

Siting constraints are discussed in detail by the author in reference 31 . In brief, Physical availability of sites is not a constraint. However, optimal siting by industry using their objective function often conflicts with the goals of other interest groups. Since much of the synfuels development will occur in areas with low population

density, "conflicts will arise between the rural social order which currently exists in the region and the new urbanized society which will accompany growth. Early planning is required to handle these impacts." (Reference No. 45)

To overcome the "locate your plant anywhere but not here" syndrome, corporate planners will have to work closely with state and local officials as well as with numerous civic associations. This requires full consideration of the secondary effects of development on the infrastructure of the immediate and surrounding areas. These by their very nature are site specific analyses. What new roads, schools, services, homes and institutions will be required? How will these requirements be funded? Can the community be protected against the worst features of the "boom" scenario and from the downside risk of bust? What does happen if the project fails and is abandoned? These are reasonable questions which often do not have reasonable answers. References 31 and 32 have discussed these key problems.

5.2.8 Transportation

Transportation constraints can be a key concern. They must be considered on a regional/site specific basis. Reference 18 has treated these concerns.

As discussed earlier in Chapter 4, transport costs can be a key part of delivered cost. As discussed later in this chapter, the availability of inexpensive bulk transportation is crucial to project development.

5.2.9 Tradeoffs

Hence, energy supply deployment will be affected by many competing constraining factors. Any specific project consideration must provide for a best optimum solution. This is clearly seen in Exhibit 5.6 in the variation to which oil shale targets would be achieved subject to different goals (Reference No. 8).

We will now look at our development of alternate supply scenarios.

EXHIBIT 5-6

ALTERNATE SHALE OIL PRODUCTION TARGETS (reference 8)*

-The Relative Degree to Which the Production Targets Would Attain the Objectives for Development

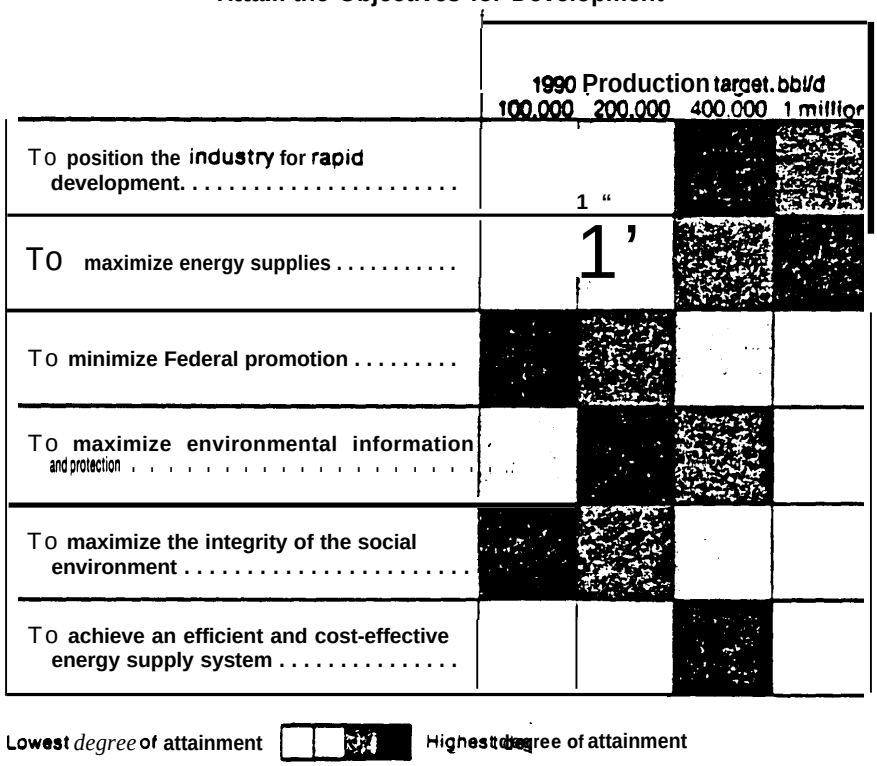

SOURCE Office of Technology Assessment.

*Shale oil product ion targets are affected by many technical, environment al, and socioeconomic factors. As described in reference 8, the OTA has assessed the variation of 1990 production targets with regard to many of these key factors.

e jb &a

5.3 Development of Supply Deployment Scenarios and Comparisons With Other Estimates

(A) Shale Oil

The oil shale industry*is in an advanced stage of development compared to other synfuel processes such as direct coal liquids. Design and construction (not including permiting) for an oil shale facility is typically in the 3-5 year time frame. Permiting requirements vary with two years being a typical time period. Most proposed/being developed projects are located in the West in the Green River Formation in Colorado, Utah, and Wyoming (Piceance, Uinta, Green River, Fossil, Great Divide, Washakie, and Sand Wash Basins) . Eastern shale development using promising new technical advances, discussed in Chapter 3, are likely to come on later. As discussed in the opening section, constraints center about resolution of land lease issues (the federal government owns over 80% of oil shale lands) , environmental and water availability issues, and availability of skilled labor, especially hard rock miners.

Table 5-1 lists the potential commercial scale projects, identifying their proposed location, process, estimated start up, and project scale (production). In addition, the Department of Energy is conducting above-ground and advanced retorting projects.** At present, permiting has been obtained for: Colony (final EIS, and a conditional PSD for 50,000, BPD complex), Union (final EIS for a 10,000 BPD commercial demonstration module unit) , Occidental (conditional PSD), Superior (final EIS) , and Paraho (draft EIS) . Based on the above projects planned, as well as individual surveys, scenario build-up rates are shown in Table 5-2. Comparisons of these rates with other estimates are shown in Table 5-3. This information is current as of 12/80.

Initial production of shale, expected in the West, is expected to be treated (upgraded/refined) in the Rocky Mountain region, and will utilize existing spare refinery capacity. The next anticipated sequential market area is the Midwestern refinery region utilizing current in-place pipeline capacity (to the extent that anticipated new crude finds in the Overthrust Belt will not absorb pipeline capacity) . The key markets envisioned for shale oil is as refinery feedstocks producing a large middle distillate slate for anticipated growing middle distillate needs (such as diesel oil). Shale oil residuals have also been proposed for use in turbines (current tests being sponsored by EPRI at Long Island Lighting) . Using a typical refinery product slate, estimated shale-derived products are depicted in Table 5-4.

---

*I.e., the industrial interests (oil, chemical, as identified in table 5-1) that are comprising the newly created shale industry.

** Private communication, DOE 12/80.

TABLE 5-1: POTENTIAL COMMERCIAL SCALE PROJECTS - SHALE OIL

PROJECT	SITE	PROCESS	PROJECT SIZE (1 OOOB/D)	EST START UP	APPROX. COST (B$)
COLONY DEVELOPMENT (Exxon, Tosco) STATUS : $75 million spent to-date; planning, detailed engineering design and cost-ing completed; construction suspended; Exxon recently bought 60% share with con-tingencies tied to 1985 start-up; Tosco may seek Federal loan guarantee to raise its share of capital	co	Surf ace Retort	47	1985	1.7 (1980$)
UNION OIL STATUS: All permits received to construct and operate 9000B\D experimental retort which will be done with pri-vate financing (and $3 tax credit) ; 50,000B/D project depends on results of experi-mental retort.	co	Surface Retort	50	1983 (9000B/D)	
TOSCO SAND WASH STATUS: $2 million spent by end of 1978; planning ex-ploration, and environmental analysis; TOSCO could use technology developed for Colony project, but would have to raise capital for both projects.	UT	Surface Retort	47	1988	
RIO BLANCO (GULF, STANDARD OF INDIANA) STATUS: $245 million spent to-date; shaft sinking & surface construction activit-ies; further action pending Federal incentive programs.	co	Mod In Situ & Surface	76	1988	

TABLE 5-1 (Continued)

PROJECT	SITE	PROCESS	PROJECT SIZE (1000B/D)	EST START UP	APPROX. COST (B$)
OCCIDENTAL-TENNECO STATUS : Site preparation & shaft sinking; detailed development plan.	co	OXY Modified In-Situ	50	1986	
WHITE RIVER SHALE PROJECT (Phillips, Sun, Sohio) STATUS: Detailed development plan completed. Environmental monitoring continuing. $86 million spent to-date. Title status cleared by Supreme Court decision.	UT	Surface Retort	50 to 100		
SUPERIOR OIL STATUS: Pilot studies completed; environmental analysis . underway at BLM; feasibility studies underway; pending land exchange appears to be contrary to current DOI policy.	co	Surface Retort	13 + minerals		
PARAHO DEVELOPMENT STATUS: Beginning feasibility study (DOE funded) .	UT	Surface Retort	30	1984	
GEOKINETICS STATUS: Beginning DOE funded feasibility study.	UT	Surface Retort	2 to 8	1985	
TRANSCO ENERGY STATUS: Beginning DOE funded feasibility study.	KY	IGT Hytort	50	1984	
CHEVRON STATUS: Recently announced initiation of feasibility study.	co	Surface Retort	50		

SOURCE: E. J. Bentz & Associates

TABLE 5-2: SHALE OIL BUILD-UP SCENARIOS*
(in units of 50,000 MMBP)
OF CRUDE OIL EQUIVALENT

Scenario	1980	1985	1990	1995	2000
A Capacity added in period		.5	7.5	.5	0
Total Capacity		.5	8	9	9
B Capacity added in period		.5	9.5	8.5	.5
Total Capacity		.5	10	18.5	19

NOTE: Most shale plants are estimated to be sited in the Green River Formation (Colorado, Utah, Wyoming) .

* Shale oil build-up scenarios were constructed using interviews and referenced literature as cited in table 5-1, text, and footnotes.

SOURCE: E. J. Bentz & Associates

ejb&a

TABLE 5-3: OIL SHALE DEPLOYMENT SCENARIOS : 1980-2000
(thousands of barrels per day of crude oil equivalent)

Source	1980	1985	1987	1990	1992	1995	2000
U.S. DOE[1] (2/80)	--	80	225	400	450	450	450
Scenario A	--	25		400		450	450
DR1[2] (10/79)	--	185	350	700	800	925	950
National Energy Plan II (5/79)							900-1300
U.S. DOE[5] (11/80)	--	25	160	400-500	550-800		
Scenario B	--	25		500		925	950
OTA[4] (6/80)			400				
Shell[5]			150				

*NOTE: Most proposed shale projects are in the West, in the Green River Formation in Colorado, Utah, and Wyoming.

Interpreted from:

[1] U.S. DOE "Oil Shale Industrialization Action Plan," Feb. 1980.

[2] Denver Research Institute, 10/79.

[3] U.S. DOE Synfuel Corporation Planning Task Force, private communication, 11/80 and 12/80.

[4] OTA--An Assessment of Oil Shale Technologies, 6/80.

[5] U.S. National Energy Outlook 1980-1990, Shell Oil Co., 2/80. Shell--U.S. National Energy Outlook, Feb. 1980.

SOURCE: E. J. Bentz & Associates

TABLE 5-4: ESTIMATED TYPICAL SHALE OIL PRODUCT SLATE: * 1980-2000

(thousands of barrels per day of crude oil equivalent)

Scenario	Products	1980	1985	1990	1995	2000
A	Gasoline		4.25	68	77	77
	Jet Fuel		5.0	80	90	90
	Diesel Fuel -		13.5	216	243	243
	Residues		2.25	36	41	41
B	Gasoline		4.25	85	157	162
	Jet Fuel		5.0	100	185	190
	Diesel Fuel -		13.5	270	500	513
	Residues		2.25	45	83	86

* Table values derived using Table 5.2 values, and typical yield slates (Chevron Research, 1978 reference: "Refining and Upgrading of Synfuel From Coal and Oil Shale by Advanced Catalytic Processes") discussed in Chapter 4, Section 6.

Because of relatively higher hydrogen content and lower aromatic concentration (than in general to coal liquids) , a "natural" product slate from shale oil is a mixture of gasoline, diesel, and jet fuel.

SOURCE: E. J. Bentz & Associates

(B) Coal Gases

As shown in the accompanying project tables, there is a significant level of varied activity in the coal gases area. Key generic processes are low/medium Btu gas and pipeline quality H-Btu gas.[q]

Low/Medium Btu Gas

As discussed in Chapter 3 and in the Appendix, leading technologies include the regular and slagging Lurgi gasifier (especially in earlier years) , Texaco, Westinghouse, Koppers, and Winkler gasifiers.

Since low/medium Btu gas offers industrial and utility users a relatively curtailment-free source of high quality fuel and chemical feedstock, it is expected that they will penetrate into the utility and chemical market. The Energy Security Act specifically exempts medium Btu gas from allocation and pricing regulations.

Low-Btu gas finds key market use as industrial fuels in such applications as kilns, small boilers, and chemical furnaces. At present it has been estimated that there are about 15-20 domestic facilities (Reference No. 48) that are beginning to use low Btu gas for these applications. These include chemical firms such as Dow Chemical as well as automotive giants such as General Motors.

The Glen Gery Corp. has itself four facilities gasifying coal to produce a fuel gas to fuel their brick kilns, while Caterpillar Tractor plant in York, Pennsylvania produces fuel gas for heat treating furnaces. NCA (8/80) estimates there are nine commercial plants (in operation, under construction, or in proposal/planning stage). It has been estimated (Reference No. 50) that low Btu gasifiers are feasible at approximately 3500 industrial plant sites. These plants are expected to be geographically located at coal/adjacent to available coal suppliers.

Medium Btu gas serves several markets. Among them are utilities and chemical feedstock markets. Medium-Btu gas could be used as a synthesis gas for producing chemical products (ammonia, fertilizers, plastics) , as well as utility power. Similarly, steel industry uses fuel for blast furnaces and annealing operations.

A potential co-product, methanol, could also be used as a utility peak showing fuel in turbines, or as an automotive fuel (Reference No. 51). Medium-Btu gas can also be used in utility use in a combined cycle

power generation mode. NCA (Reference No. 48) estimates there are five commercial scale plants in the proposed/planning stage. Key demonstration plants at TVA, Memphis Industrial Fuel Use Plant, and Cool Water, California (Southern California Edison) , are in advanced stages. It has been estimated (Reference No. 50) that there are approximately 350 potential sites for single user or limited distribution medium Btu gasifiers. In addition, there are combined-cycle markets (Reference No. 51). As shown on the accompanying tables (and NCA survey) , likely locations for medium Btu facilities include Louisiana, Texas, Arkansas, Pennsylvania, New Mexico, California, Tennessee, Montana, Virginia, and Illinois. Table 5.5 lists the key proposed projects under way.

Table 5-7 gives the scenario deployments of medium Btu/L Btu gas. The rate build-up was estimated by review of the cited data tables, on-line surveys, and judgmental interpretation with alternate comparative estimates.

H-Btu Gas

As shown in the accompany table (Table 5-6) , of proposed commercial scale projects most early H-Btu gas development will occur in the West, especially in the states of North Dakota, Wyoming, Utah, New Mexico, and Montana (Northern Great 'Plains Regions and Rocky Mountain Region) . Construction is at present underway in North Dakota on the Great Plains Gasification project. As shown in the table, this plant could be producing by 1984, with a production of 138 mmscf/day, at which time a second plant would begin (an additional 138 mmscf/day) . Later plants are expected to be deployed in the Southwest (Texas, Louisiana, Arkansas, Oklahoma) , and in the East (Pennsylvania) , and capture the use of existing transportation lines.

The predominant end use for H-Btu gas is space heating (industrial/commercial) . Industrial use of the gas will be in the chemical, utility, and steel, iron and glass products industries (i.e., large current users of natural gas) . Market penetration will be affected by the pricing treatment of gas (e.g., rolled-in pricing) over the estimation period (period of natural gas deregulation) . Table 5-7 gives the scenario deployments of H-Btu gas over the estimation period. It is based on judgmental interpretation of the plant-specific build-up data cited, and on-line survey results. Table 5-8 gives the comparison of the scenario estimates with those of other sources.

TABLE 5-5 : POTENTIAL COMMERCIAL SCALE PROJECTS - LOW/MED BTU GAS

I. THE FOLLOWING PROJECTS ARE CURRENTLY UNDER DEVELOPMENT

(12/80)

PROJECT	SITE	PROCESS	PROJECT SIZE (1000BOE[D)	APPROX . COST (B$)
REYNOLDS ALUMINUM CO. APPLICATION: Power Generation for Aluminum Reduction	VA			
can-/do* APPLICATION: Industrial Gas	PA			
MUNICIPAL UTILITIES BOARD APPLICATION: Industrial Gas	AL			
PANHANDLE EASTERN APPLICATION: Industrial Gas	TX		8	
MEMPHAS GAS* APPLICATION: Utility\Feedstock (construction begins in 1982)	TN			0.3
SAN DIEGO P & L APPLICATION: Utility/Feedstock	CA			
ILLINOIS POWER COMPANY APPLICATION: Utility--Combined Cycle (1982 target)	IL		2	0.1
SOUTHERN CALIFORNIA EDISON APPLICATION: Utility--Combined cycle	CA		3	0.3
HOUSTON NATURAL GAS APPLICATION: Utility/Feedstock	LA			
COOLWATER APPLICATION: Utility-Combined Cycle (1984 target)	CA		100MW	0.2

*These projectsarecurrently funded as part of the Fossil Energy Technology Demonstration Program. (12/80)

ejb&a

TABLE 5-5: (I Continued)

PROJECT	SITE	PROCESS	PROJECT SIZE (10 00BOE/D)	APPROX. COST (B$)
MID-WEST ENERGY COAL ALTERNATIVE, INC. APPLICATION : Industrial Fuel/ Feedstock	IL			
CARTER OIL APPLICATION : Industrial Gas and Feedstock	TX			
ENERGY CONCEPTS APPLICATION: Electric Generation and/or Feedstock	OH			

SOURCE: E. J. Bentz & Associates

ejb&a

TABLE 5-5 (Continued)

II. THE FOLLOWING PROJECTS RECENTLY RECEIVED DOE FEASIBILITY GRANTS (PL-96-126)

PROJECT	SITE	PROCESS	PROJECT SIZE (1000B/D)	EST START UP
UNION CARBIDE APPLICATION : MBG+H_2 for fuel and feedstock	TX	Texaco	21.550	1988
GENERAL REFRACTORIES APPLICATION: LBG fuel to kiln for Pearlite Mfg.	KY	Wellman-Galusha	1.034	1983
CENTRAL MAINE APPLICATION: Combined cycle power- (new)	ME	Texaco	14.100	1987
FLORIDA POWER APPLICATION: Combined cycle repower	FL	BGC-Lurgi	7.458	1985
TRANSCO APPLICATION: MBG to existing power plants	TX	Lurgi	21.550	1985
PHILADELPHIA GASWORKS APPLICATION: MBG-fuel gas	PA	TBD	3.448	1985
EG&G APPLICATION: Combined cycle power & methanol	MA	Texaco	28.500	1986

NOTE: Over 40 proposals were received in response to 3/79 Notice of Program Interest. About 50 proposals were received in response to Feasibility and Cooperative Agreement Solicitations under P.L. 96-126. PL 96-304 programs are not listed due-to the funding uncertainty associated with the current recission order.

ejb&a

TABLE 5-6: POTENTIAL COMMERCIAL SCALE PROJECTS--HIGH BTU GAS

PROJECT	SITE	PROCESS	PROJECT SIZE (1000BOE\D)	EST START UP	APPROX. COST (B$)
GREAT PLAINS GASIFICATION STATUS: $40 million spent for project design and environmental work. All permits obtained but final FERC tariff to market the gas. DOE cooperative agreement & loan guarantee under P.L. 96-126. Plant could be producing by 1984. A second plant with additional 138 mmscf/day is contingent on the results of Phase 1.	ND	Lurgi	25 (138mmscf/d)	1984 earliest	1.5
WYCOAL GAS INC. STATUS: Recently received DOE cooperative agreement to develop definitive design, estimate costs, secure permits and approvals, obtain financing and identify long-lead delivery items; market is company owned pipeline to mid-West. Second phase would add a second 150 mmscf/d.	WY	Lurgi & Texaco	25 (150mmcf/d)		
EL PASO NATIONAL GAS STATUS: Initial 1972 application to FPC placed in abeyance. Coal commitment obtained; water lease expected; FERC tariff required before construction.	NM	Lurgi	13 (72mmscf\d)	earliest 1986	.6
TEXAS EASTERN/TEXACO STATUS: Water and coal from Texaco's Lake Desmet Reservoir property. Recently announced privately financed feasibility study.	WY	Lurgi	50 (275mmscf/d)	could be operative by 1990	

ejb&a

TABLE 5-6 (continued)

PROJECT	SITE	PROCESS	PROJECT SIZE (1000 BOE/D)	EST START UP	APPROX . COST (B$)
PANHANDLE EASTERN PIPELINE COMPANY STATUS : Coal and water commitments have been obtained. No filing yet before FERC. Second 135 mmscf/day stage if justified by first stage results.	WY	Lurgi	25		2.
MOUNTAIN FUEL COMPANY STATUS: Feasibility study under way. No filing before FERC to date.	UT	Lurgi	50 (275mmscf/d)	1990	
NATURAL GAS PIPELINE CO. OF AMERICA STATUS: Preliminary engineering design completed. No filing before FERC.	ND	Lurgi	50 (275mmscf/d)	late 1980s	
TEXAS EASTERN SYNFUELS STATUS: Beginning DOE funded feasibility study.	NM	Lurgi	43 (sng+MEOH)	late 1980s	
CROWE TRIBE OF INDIANS STATUS: Beginning DOE funded feasibility study.	MT	Lurgi	22	1987	

*Refers only to PL 96-126 feasibility and cooperative agreements. PL 96-304 project programs are not listed due to funding uncertainty associated with the current budget recission order.

SOURCE: E. J. Bentz & Associates

TABLE 5-7: SCENARIO DEPLOYMENT: H-Btu GAS AND MED/LOW Btu GAS
(EXPRESSED IN MMBD AND 50,000 BPD PLANT UNITS)

SCENARIO			1985	1990	1995	2000
H-Btu Gas (A)	Added Capacity in period (MMBD)	(# plants) (50,000 BPD)	.025 (.5)	.155 3.1	.20 (4)	.12 2.4
	Total Capacity	(# plants)	.025 .5)	.180 (3.6)	.380 (7.6)	.50 (10)
H-Btu Gas (B)	Added Capacity in period MMBD)	(# plants) (50,000 BPD)	.025 .5	.375 (7.5)	.350 (7)	.250 (5)
	Total Capacity	(# plants)	.025 (.5)	.400 (8)	.750 (15)	1.0 (20
Med/Low Btu Gas (A)	Added Capacity in period (MMBD)	(E plants) (50,000 BPD)	.06 (1.2)	.115 (2.3)	.125 (2.5)	.10 (2)
	Total Capacity	(# plants	.06 (1.2)	.175 (3.5)	.30 (6	.40 (8)
Med/Low Btu Gas (B)	Added Capacity in period (MMBD)	(# plants) (50,000 BPD)	.06 (1.2)	.19 (3.8)	.15 (3)	.10 (2)
	Total Capacity	(# plants	.06 (1.2)	.25 (5)	.40 (8	.50 10)
Sum (A)	Total Capacity (MMBD)		.085 (1.7)	.355 (7.1)	.680 (13.6)	.90 (18)
SUM (B)	Total Capacity (MMBD)		.085 (1.7)	.65 (13)	1.15 (23)	1.50 (30)

SOURCE: E. J. Bentz & Associates; scenarios constructed using interviews and referenced literature cited in text, footnote q, at tables 5.5 and 5.6.

TABLE 5-8 : SYNTHETIC COAL GASES COMPARISONS

Source	1980	1985	1990	1992	1995	2000
National Energy Plan[1] (May 1979)						.8-1.0
Frost & Sullivan[2]			.8			2.2
Exxon[3]			.5			.7-1.5
U.S. DOE[4]		.05	.36	.63		
Shell[5]		.19	.49			
Scenario A		.085	.355		.680	.9
Scenario B		.085	.65		1.15	1.5

[1]U.S. National Energy Plan II.

[2]As reported in Synfuels, 2/80.

[3]Exxon Energy Outlook, 12/79.

[4]Private communication, DOE.

[5]Shell National Energy Outlook, 2/80.

SOURCE: E. J. Bentz & Associates

(c) Coal Liquids

As discussed in earlier chapters, coal liquids consist of indirect liquefaction of coal (Fischer-Tropsch liquids, methanol, methanol-gasoline) , and direct liquid processes (H-coal, EDS, SRCII) . As shown in the accompanying Table 5-9, all early (to 1990) commercial scale projects receiving current government support are in the indirect category, although several direct liquefaction proposals have been received. As such, indirect liquefaction liquids are expected to dominate coal liquids product in the later decades of the century. At present, the only commercially demonstrated coal liquefaction process is the Fischer-Tropsch process used in the SASOL plants in South Africa (described in Chapter 3) . This process technology, an indirect liquefaction technology, is being adopted and improved for use in the U.S. The other key indirect liquefaction processes are methanol production-- a well known commercial process technology, and Mobil-M methanol-to-gasoline process, which should be commercially demonstrated within several years. In addition to several U.S. funded domestic studies for M-gasoline (see Table **5-9**), there is a pilot plant demonstration project in Germany (Reference-No. 48) , and a natural gas-methanol-M-gasoline commercial project scheduled for operation -in New Zealand by mid-80's (Reference No. 49). At present, there are no "commercially available direct liquefaction processes. The government has jointly (with industry) funded an SRC 1l demonstration plant and an
EDS, and H-coal pilot plants for operation in mid-80's. Including the government sponsored study projects, there have been a total of 13 commercial plants, 4 demonstration plants, and 4 pilot plants are proposed/or in operation in the U.S. (Reference No. 18).

The anticipated deployment, based on judgmental interpretation of individual planned projects, current survey work, and individual project reviews, is depicted in the accompanying Table 5-9. As expected, indirect liquefaction processes dominate throughout, with direct liquefaction processes coming on stream late in the century. Early deployment is expected in the Northern Great Plains and Southwest region to capture existing product pipeline capacity (and water transport) and to fill energy product demands. Direct liquefaction developments are projected to come on in the 90's, and focus their activities in the Appalachian and Interior coal regions.

Direct liquid conversions naturally produce a high fraction of heavy oils. Since the traditional market for heavy oils (utility and industrial boilers) will probably convert to direct combustion of coal and medium Btu gas, upgrading of product slates into other market fuels is probable. Gulf's "Phase Zero Study" to DOE (also see Market Applications for SRC-11 products, Proceedings of the Sixth Annual International Conference on Coal Gasification, Liquefaction and Conversion of Electricity, Univ. of Pittsburgh, July 31-August 2, 1979) identified a substantial market where coal-derived liquid boiler fuels would have a distinct economic advantage over coal combustion with flue gas desulfurization primarily in congested areas of the Northeast where retrofitting to include flue gas desulfurization is expensive. As an example, projected EDS product slate usage could consist of stationary turbine fuels, special marine diesel fuels, and potentially home heating oils.

In general, direct coal liquefaction yields a high fraction of heavy fuel oil products. Current R&D work (at the laboratory stage) aims at upgrading this yield to the middle distillate, and naptha portion, thus minimizing the residual portion. However, this requires considerable upgrading by hydrogeneration or hydrotreating, as discussed in Chapter 4. In general, the products will be much more aromatic than equivalent petroleun-based products (private communication, Exxon Company, USA, 10/80) .

Indirect liquids such as Mobil-M gasoline and methanol have projected use in transportation, and transportation/utility peak usage respectively. These and other product slates (Fischer-Tropsch) have been identified and discussed in Chapters 3 and 4.

Tables 5-10 and 5-11 depict the scenarios constructed from this data. Table 5-12 compares the scenario with other data.

TABLE 5-9 : POTENTIAL COMMERCIAL SCALE PROJECTS--COAL LIQUIDS (12/80)
(SOURCE : E. J. Bentz & Associates; note feasibility study refers only to PL 96-126 programs)

PROJECT	SITE	PROCESS	PROJECT SIZE (1000BOE/D)	EST START UP	APPRQX. COST (B$)
W.R. GRACE STATUS: DOE cost shared demo; conceptual design near completion; construction scheduled for 1984.	TN	Texaco Methanol M-Gas	6		0.5
TEXAS EASTERN SYNFUELS STATUS: Feasibility study completed; entered into cooperative agreement with DOE.	KY	Fischer Tropsch	56		
HAMPSHIRE ENERGY STATUS: Beginning DOE funded feasibility study.	WY	Methanol M-Gas	18	1985	
NAKOTA CO. STATUS: Beginning DOE funded feasibility study.	ND	Methanol	40	1987	
W.R. GRACE STATUS: Beginning DOE funded feasibility study.	co	Methanol	14	1986	
AMAX STATUS: Beginning DOE funded feasibility study.	MN	Methanol		1985	
HOUSTON NATURAL GAS/TEXACO STATUS: Beginning DOE funded feasibility study.	LA	Methanol	11	1987	
COOK INLET REGION STATUS: Beginning DOE funded feasibility study.	AK	Methanol	23	1987	
CELANESE STATUS: Beginning DOE funded feasibility study.	TX	Methanol	10	1986	
CLARK OIL & REFINING STATUS: Beginning DOE funded feasibility study.	IL	Methanol M-Gas	12	1987	

TABLE 5-lo: COAL LIQUIDS BUILD-UP RATE SCENARIOS : INDIRECT AND DIRECT*

(12/80) (In Plant Units of 50,000 BPD)
of Crude Oil Equivalent

	SCENARIO	1980	1985	1987	1990	1995	2000
INDIRECT	A Capacity added in period			3	3	3	5
	Total Capacity			3	6	9	14
	B Capacity added in period			3	5	10	12
	Total Capacity			3	8	18	30
DIRECT	A Capacity added in period				2	2	2
	Total Capacity				2	4	6
	B Capacity added in period				2	8	10
	Total Capacity				2	10	20

*Coal liquids build-up scenarios were constructed using interviews and referenced information as cited in Table 5-9, text, and footnotes p and r.

SOURCE: E. J. Bentz & Associates

ejb&a

TABLE 5-11: COAL LIQUIDS BUILD-UP RATE SCENARIOS* (12/80)

(In plant Units of 50,000BPD)
of Crude Oil Equivalent

	Scenario	1980	1985	1987	1990	1995	2000
A	Capacity added in period			3	5	5	7
	Total Capacity			3	8	13	20
B	Capacity added in period			3	7	18	22
	Total Capacity			3	10	28	50

*Values derived from Table 5-10.

SOURCE: E. J. Bentz & Associates

TABLE 5-12: COAL LIQUIDS COMPARISONS

(MMBD) of Crude Oil Equivalent

Source	1980	1985	1987	1990	1992	1995	2000
National Energy Plan[1]							.7-1.8
Frost & Sullivan*				1.0-1.5			9.5
U.S. DOE[3]			.14 .12	.5 .37	.8 .57		
She11[4]		.03		.25			
Scenario A			.15	.4		.65	1.0
Scenario B			.15	.5		1.4	2.5

[1]National Energy Plan II, 5/79.

[2]Synfuel Week reported 2/8/80.

[3]Private communication, DOE, 11/80.

[4]Shell National Energy Outlook, Preliminary Version, Feb. 1980.

SOURCE: E. J. Bentz & Associates

(D) Summary Tables and Comparisons

Table 5-13 depicts the summed synthetic fuel deployment schedules. Table 5-14 compares our "grass root" scenario build-up with other estimates developed by different approaches. As seen in Figure 5-1, the scenario brackets most estimates.[s]

Next we will look at the labor requirements associated with the scenarios, as well as identify other impacts and concerns associated with their synfuel deployment.

TABLE 5-13 : SUMMED SYNTHETIC FUEL DEPLOYMENT SCHEDULES*
(in plant units of 50,000 BPD)
of Crude Oil Equivalent

	1980	1985	1990	1995	2000
Shale Oil	--	.5	8	9	9
Coal Liquids	--	--	8	13	20
A Coal Gases	--	1.7	7.11	13.6	18
Total	--	2.2	23.11	35.6	47
(MMBD)	--	(.11)	(1.16)	(1.78)	(2.35)
Shale Oil	--	.5	10	18.5	19.0
Coal Liquids	--	--	10	28	50
B Coal Gases	--	1.7	13.0	23	30
Total	--	2.2	33.0	69.5	99
(MMBD)	--	(.11)	(1.65)	(3.48)	(4.95)

*Derived from adding Tables 5-2, S-7, and 5-11.

SOURCE: E. J. Bentz & Associates

TABLE 5-14 COMPARISON OF TOTAL SYNTHETIC FUEL PRODUCTION ESTIMATES (TARGET GOALS)

(MMBD)
of crude Oil Equivalent

Source	1985	1987	1990	1992	1995	2000
Energy Security Act[1]		.5		2.0		
Exxon Outlook[2]			1.2-1.5			4.0-6.1
Bankers Trust[3]			.5			
Mellon Institute[4]						2.1
Natl. Energy Plan (II)[5]						2.4-4.1
NTPSC[6]						
(Low-Meal)	0-.02		03-.18		.28-1.27	1.34-5.34
Shell[7] 2/80	.22		.89			
Scenario A	.11					
Scenario B	.11					

[1]Energy Security Act, PL 96-294 6/30/80, Sec. 100(a)(2).

[2]Exxon Energy Outlook, Dec. 1979.

[3]Bankers Trust Forecast--as reported in Synfuels, 8/15/80.

[4]Mellon Institute Forecast--as reported in Synfuels, 8/22/80.

[5]National Energy Plan II, May 1979.

[6]National Transportation Policy Study Commission Report, July 1979.

[7]Shell National Energy Outlook, preliminary version, Feb. 19, 1980.

SOURCE: E. J. Bentz & Associates

ejb&a

Figure 5.1: Comparison of Synthetic Fuel Production Estimates

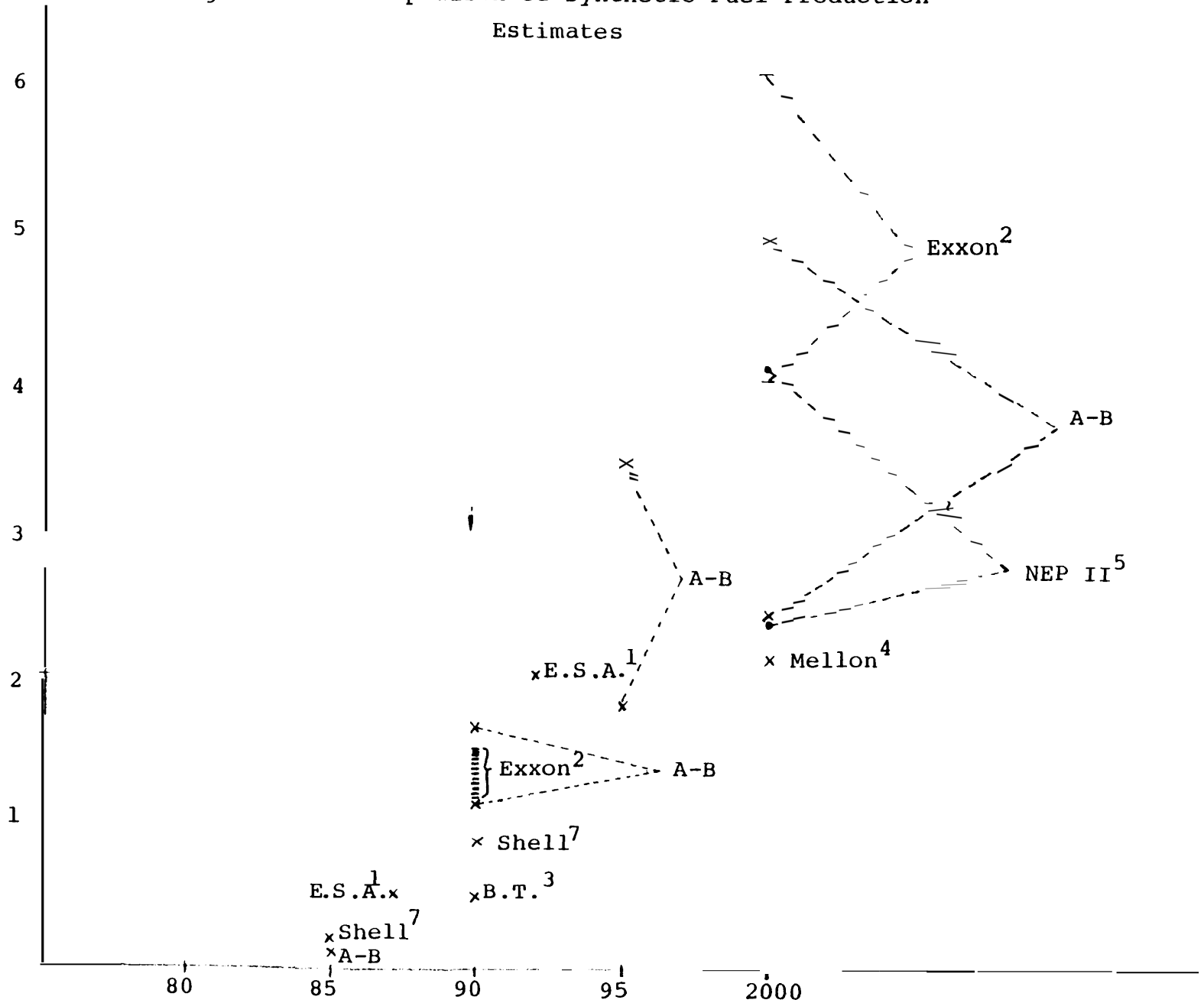

SOURCE: E. J. Bentz & Associates
(derived from Table 5-14)

5.4 Labor Requirements Associated With The Scenarios

There are two categories of labor needs: construction labor and operations labor. As discussed in Chapters 2, 3 and 4, construction labor represents a peak employment situation whereas operations represents a steady-state labor requirement associated with the useful life of the facility. In addition, as discussed earlier, there are additional labor requirements in the geographical (and sectoral) area associated with provision of goods and services for the facility or for its labor force. The peak labor force is confined to a limited number of years (4-6) and often is several times the size of the resident population. This is especially so in the West. The impacts of this surge in peak labor can cause numerous community and environmental concerns in addition to severe strain on local infrastructure and even erosion of this infrastructure. Reference No. 52 discusses in detail some of these site impacts and their consequences. In addition, several studies, such as the Sec. 153a Studies of the 1976 Highway Bill, have looked at "Coal Roads" Issues, and the recently passed Energy Security Act mandates further studies to assess and hopefully suggest mitigation to energy impacted communities. The National Transportation Policy Study Commission in its final report (July 1979) specifically addressed the large and growing impacts of coal movement either in unbeneficiated or product form (pp. 141-149: The Commission forecast a large growth in the movement of coal. Associated with these movements will be: physical capacity concerns of a carrier nature; adequacy of service issues associated with carrier capabilities; and potential disruptions associated with these large scale movements) .

5.4.1 Operations Labor Needs

Based on Chapter 4 results, a typical labor composition for operation of a 50,000 barrel/day synthetic fuel facility is as follows:

Operations	120	people
Operator supervisors	25	people
Maintenance labor	150	people
Maintenance supervisors	30	people
Administrative	30	people
Total	**355**	people

Hence, upon applying this typical labor force participation to the scenario deployment estimates we arrive at the following aggregate estimate of needs: (See Table 5-15).

TABLE 5-15 AGGREGATE OPERATIONS LABOR NEEDS (WORKERS) *

Workers	1985		1990		1995		2000	
	A	B	A	B	A	B	A	B
Operators	264	264	2773	3960	4272	8340	5640	11,880
Operator Supervisors	55	55	578	825	890	1738	1175	2,475
Maintenance Labor	330	330	3465	4950	5340	10,425	7050	14,850
Maintenance Supervisors	66	66	693	990	1068	2085	1410	2,970
Administrative	66	66	693	990	1068	2085	1410	2,970
Totals	781	781	8202	11,715	12,638	24,673	16,685	35,145

* Table 5-15 entries derived upon applying Chapter 4 typical labor force estimate to values developed in Table 5-13. Operations labor needs skill mix utilized, Chapter 4, based on ESCOE process estimates.

SOURCE: E. J. Bentz & Associates

5.4.2 Construction Labor Needs

For a typical 50,000 BOED synthetic fuel plant, the following construction labor skill mix needs are representative for the generic process as described in Chapters 3 and 4 (manpower requirements provided by Chapter 4 reference information and Reference No. 53). These estimates, as described in the reference citation, are associated with the conversion process above. In addition to these estimates will have to be added labor needs associated with mining, transportation, potential upgrading, distribution, and retailing. These requirements, however, will depend upon the specific product produced, the particular resource (fuel or coal) selected, the nature of the site, and other specific features. The Appendix to Chapter 2 gives a representative sample for different specific conditions. Manpower rates used are those based upon the previously referenced ESCOE work, which was part of the original study design.

A. Direct Coal Liquids and Shale:

Engineers	958 man years
Draftsmen/Designers	625 man years
Manual, blue collar (including pipefitters, welders, skilled labor)	9160 man years

B. Indirect Coal Liquids:

Engineers	1985 man years
Draftsmen/Designers	1330 man years
Manual, blue collar (including pipefitters, welders, skilled labor)	16,185 man years

C. Coal Gases

Engineers	1000 man years
Draftsmen/Designers	700 man years
Manual, blue collar (including pipefitters, welders, skilled labor)	9000 man years

The typical construction period is spread such that the spread used for construction personnel labor demand is as follows: (This does not include permitting requirements or delays)

% Deployment	Year 1	2	3	4	5
Engineers	30	40	15	10	5
Draftsmen/Designers	30	40	15	10	5
Manual/Blue Collar	o%	10%	30%	40%	20%

Using the above estimates, and the previously derived supply deployment scenarios, we estimate the following incremental labor construction requirements (for each indicated time period) for each generic process and scenario (Tables 5-16 to 5-19).

TABLE 5-16 : DIRECT COAL LIQUIDS*

Incremental Construction Labor Requirements for Plants Coming On-line in Period Ending

(Man-years

	1987		1990		1995		2000	
Scenario:	A	B	A	B	A	B	A	B
Engineers	-	-	1,916	1,916	1,916	7,664	1,916	9,580
Draftsmen/ Designers	-	-	1,250	1,250	1,250	5,000	1,250	6,250
Manual, Blue Collar	-	-	18,320	18,320	18,320	73,280	18,320	91,600

*Table 5-16 values based on process construction labor needs identified in Section 5.4.2 applied to values in Table 5-10.

SOURCE: E. J. Bentz & Associates

TABLE 5-17 : INDIRECT COAL LIQUIDS*

Incremental Construction Labor Requirements for Plants Coming On-line in Period Ending
(Man-years)

	1987		1990		1995		2000	
Scenario:	A	B	A	B	A	B	A	B
Engineers	5,955	5,955	5,955	9,925	5,955	19,850	9,925	23,820
Draftsmen/ Designers	3,990	3,990	3,990	6,650	3,990	13,300	6,650	15,960
Manual, Blue Collar	48,555	48,555	48,555	80,925	48,555	161,850	80,925	194,220

*Table 5-17 values based on process construction labor needs identified in Section 5.4.2 applied to values in Table 5-10.

SOURCE: E. J. Bentz & Associates

TABLE 5-18: SHALE OIL *

Incremental Construction Labor Requirements for Plants Coming On-line in Period Ending

Man-Years

	1985		1990		1995		2000	
Scenario:	A	B	A	B	A	B	A	B
Engineers	480	480	7,185	9,100	958	8,143	-	480
Draftsmen/ Designers	313	313	4,688	5,938	625	5,313	-	313
Manual, Blue Collar	4,580	4,580	68,700	87,020	9,160	77,860	-	4,580

*Table 5-18 values based on process construction labor needs identified in Section 5.4.2 applied to values in Table 5-2.

SOURCE: E. J. Bentz & Associates

TABLE 5-19 : COAL GASES *

Incremental Construction Labor Requirements for Plants ComInOn-line in Period Ending

(Man-Years)

	1985		1990		1995		2000	
Scenario:	A	B	A	B	A	B	A	B
Engineer	1,700	1,700	5,410	11,330	6,480	10,000	**4,400**	**7,000**
Draftsmen/ Designers	1,190	1,190	3,78+7777	7,910	4,543	7,000	3,080	4,900
Manual, BlueCollar	15,300	15,300	48,690	101,700	58,410	90,000	39,600	63,000

*Table 5-19 values based on process construction labor needs identified in Section 5.4.2 applied to values in Table 5-7.

SOURCE: E. J. Bentz & Associates

5.4.3 Regional Deployment of Synthetic Fuel Plants Work Force

Not all construction labor needs will be uniformly distributed. As discussed earlier, different generic processes will favor siting in different regions:

(i) Oil Shale: Almost all shale plants will be sited in the West until the close of the century. Hence all labor needs--both construction labor and operation labor--will be centered at the sites specified earlier (Piceance, Uinta Basin).

(ii) Coal Liquids: Coal liquids, like coal gases, will be more widely dispersed due to the abundant and regionally varied U.S. coal supplies. As discussed earlier, most of the earlier plants will be of the indirect variety. Later direct plants will be deployed in the Interior and Appalachian regions. Using our previous build-up estimates, and those of other references, (34), we estimate the following regional work force for coal liquids:

Table 5-20: Regional Share of Incremental Construction Work Force for Plants Coming On-Line in Period Endina:

(% Share of Totals in Man Years)[t]

Scenario:	1990 A	1990 B	1995 A	1995 B	2000 A	2000 B
South Atlantic	0	11%	**29%**	**15%**	**0**	**6%**
East North Central	**37%**	30%	29%	35%	50%	41%
East South Central	13%	13%	14%	13%	17%	12%
West North Central	25%	21%	14%	15%	0	**18%**
West South Central	0	0	0	**5%**	**17%**	**12%**
North Mountain	**25%**	**25%**	**14%**	**5%**	**17%**	**11%**

(iii) Coal Gases: As discussed earlier, coal gases' characteristic size units are smaller, more numerous and more regionally dispersed. It is expected that they will share the same regional share deployment as do coal liquids reflecting sitings at coal resources, and reflected in the table above.

5.5 Additional Concerns and Impacts: Product Acceptability Concerns

We have already identified key impact concerns and constraints: associated with synfuel development along the entire fuel cycle (Chapter 2); associated with individual technological processes (Chapter 3); with upgrading (Chapter 4); and with actual proposed synfuel plants (Chapter 50. We also have identified and discussed the supply-oriented needs and constraints associated with synfuel development. Many of these concerns are characteristic of the site-process selection (see Footnote to Chapter 5) , and others are characteristic of the entire industry build-up to meet synfuel objectives.

In addition to these concerns, there are other concerns associated with synfuel product acceptability in the user marketplace. Traditional end use technology--such as internal combustion engines--have been optimized to meet performance specifications based on power fuel specifications, i.e., fuel product specificity must match engine tolerances on a physical and material basis. In addition to these performance specifications, additional institutional requirements have been placed on the utilization of end use technologies. Choosing the automobile again, automotive emission standards for criteria pollutants have been established with scheduled decreases in emissions over time. In addition, automotive fleets are subject to meeting the CAFE standards for fuel economy. Hence the optimization process of matching automotive performance with fuel specifications is a constrained one.

The potential changes in automotive standards (emission standards for diesel exhaust), as well as the potential introduction of new regulations and procedures which impact on fuel production (such as regulations pursuant to TSCA, RCRA, and Hazardous Waste Act) , will further constrain the choices available and the time available to find them. Also in the achievement of these choices, tradeoffs between preservation of performance goals and removal of potential contaminants may have to be made. Several examples of the types and nature of these product acceptability concerns follow:

- Severe hydrotreating of syncrudes may alter or destroy certain fuel characteristics such as lubricity. In recent tests (Reference No. 54 of hydrotreated Alaskan crude, the Navy found that the hydrotreating affected the lubricity of the resulting fuel, which in turn affected the operation of their fuel pumps in aircraft engines.

- The handling and burning of heavy fuel oils, especially from coal, may raise potential concerns due to their high aromaticity and potential toxicity. Potential carcinogenic concerns have also been raised (Reference No. 55). These concerns require further testing.

- Nitrogen removal: Several concerns have been raised about the relatively higher concentration of nitrogen in synfuels. Among them:

  . Higher nitrogen content in synfuels has been found by Navy to be a factor in "gumming" (reference above) .

  . Meeting present NO_x automotive emission standards (1.2 grams/mile) has been difficult for the industry. With the higher fuel-bound nitrogen content of oil shale liquids, this difficulty is expected to increase. Although severe hydrotreating of the oil shale would certainly improve this situation, it would involve, as discussed in Chapter 4, additional upgrading costs. (In general, shale oil would be hydrotreated to reduce nitrogen content prior to pipelining to refinery. Also arsenic contaminants would be removed as-they would poison refinery catalysts, a key question in the degree of upgrading to meet anticipated specs, and at what cost?)

  . Most SRC liquids have been found to be too high in sulfur and nitrogen content. Recent tests sponsored by EPRI at Con-Ed in New York with SRC-II liquids have required combustion modifications.

- The storage of incomplete refined or upgrated products may pose disposal problems (and costs) especially in more fragile ecosystems (see reference 56 for discussion of aggregate waste requirements) .

Next Step(s)

Next Step(s) will require that additional research and testing be performed both at the fuel supplier and end-user levels so that optimum changes can be made between fuel upgrading requirements and end-use combustion changes. As shown in Chapter 4, synfuels can, in principle, be processed to resemble current fuel production "specs" (e.g., gasoline produced from the Sun Oil refinery at Toledo from tar sands feedstocks) . Similarly, redesign of end-use technologies to meet less expensively produced synfuel yields are potential research options.

The potential use of the higher aromatic content of coal liquids for efficiency improvements in higher-compression engines is one example. The use of neat methanol is another. The essential series of sub-optimization "match-ups" --constrained by health, environmental, safety and other concerns such as liability for technology warantees--will also reflect the utilization of current infrastructure (e.g., refinery capacity) , and the projected composition of natural crude supplies (Alaskan and Saudi sour crudes, Venezuelan and Bakersfield heavy crudes; Overthrust production), to which synthetic fuels contribute. This, however, is beyond the scope of this study.

5.6 FOOTNOTES TO CHAPTER 5

a. (i) The general methodology used in developing the "bottoms-up" assessments has used the following sources of information:

(1) referenced literature and data cited in text and footnotes

(2) numerous interviews with industrial and governmental sources, including members of the OTA Synfuel Advisory Group

(3) proprietary information heretofore developed by EJB&A, as cited

*Much of the interview information built upon existing and on-going studies being performed by EJB&A. As such, the data base used was much larger than the study scope allowed in itself. Among the key sources of interview information were:

(1) Governmental interviews were conducted with numerous federal- and state offices including: the U.S. Department of Energy [Policy Office, Fossil Fuel" Office, Resource Applications, Conservation Office, National Laboratories (Oak Ridge)], the U.S. Environmental Protection Agency (Toxics Substance Office, R&D Office), Kentucky Department of Energy; California Energy Commission; and the Massachusetts Energy Office.

(2) Industrial interviews were conducted with numerous staff of the major oil companies; chemical companies; automotive companies; and utility companies.

The OTA Synfuels Advisory Group, as well as the OTA staff, were particularly helpful in their sound advice, judgment, and insights in developing information.

(ii) The overall guiding general assumptions used in the methodological approach were:

(1) There will be no major international conflict which would preclude supply of foreign raw materials and manufactured equipment.

(2) There will be no dramatic increase in the consumption of energy related materials or equipment by other segments of industry which will impact on the synfuels fuels program.

(iii) The overall approach methodology is given in footnote p.

(iv) Specific assumptions associated with the development of each of the scenario assessments have been given in the text, and in footnotes: p (general and for shale oil); q (for coal gases); and r (for coal liquids. Furthermore, regionalization techniques are cited in footnote t.

(v) Scenario scope was chosen in consultation with OTA staff at initial and interim briefings, and as reflected in contract study scope.

b. As discussed later in the individual scenario sections, "high" refers to a maximum deployment schedule, which pushes the limits of material and skill mix availability. However, it does not represent an emergency, supply interruption contingency scenario. Development in the high scenario is conducted by the private sector with fiscal and R&D incentives being provided by the government so as to minimize commercial risk, and to accelerate the pace of development. The "business-as-usual" deployment schedule represents a more historical growth characteristic of capital-intensive new growth industries, as discussed in Chapter 4. High capital demands, technical uncertainties, and other factors discussed in Sections 5.2 and 5.3 dictate a more cautious approach that minimizes financial exposure. The governmental role is mainly an R&D role, especially in high-risk, yet potentially high payoff beneficial technologies. Government fiscal incentives are very minimal as compared to the high scenario. High and low scenario choices were chosen in conjunction with guidance from the OTA staff in initial, and subsequent interim briefings.

c. I.e., in the mid-term (1980-2000), we have attempted using existing information on scheduled supply projects to match supply concerns with demand needs. An aggregate approach reveals little as to the "make-up" of the fuel composition, although macro aggregate techniques can be valuable in long-term analysis, and in investigating macro-economic effects such as capital formation and monetary effects.

d. Post 2000 fuel demand slate requirements are dictated more by an assessment of long-term economic market forces, and post 1980 mid-stream supply corrections that by 1980 "current" supply deployment constraints. This is especially

so since there is ample time (for the 2000+ period) to remedy longer-term constraints and because of the inherent uncertainties associated with projecting long-term supply projections. This will be more fully discussed later in footnote p, subsection (v).

e. "Transition period" here simply refers to the time period 1980-2000 in which we are introducing new fuel supply sources to complement our existing sources. Post 2000 fuel supplies may consist of considerable numerous, non-renewable, and renewable fuel sources contributions. As such, the 1980-2000 period reflects a period of decision-making and change to achieve alternate fuel goals.

f. Examples of these are: fuel cell use in automobiles; electric vehicles; and extensive use of active device solar heating and cooling. For a more detailed description of potential automotive end use technology changes see Report of the National Transportation Policy Study Commission, June 1979, p. 93.

g. As an example of an alternate integrated approach see Forecasts of Freight System Demand and Related Research Needs, National Academy of Sciences, June 1978; "Transportation Modeling and Freight Demand Trends, " p" 33, E. J. Bentz & Associates

h. Already defined in (e) above.

i. These alternative assessments, as referenced, reflect the use of a variety of different techniques. The specific techniques used differ greatly. Whereas some forecasts rely heavily on the use of macroeconomic models (e.g., DRI, Wharton, Chase) , others use more industry-specific survey approaches. In the cited references for each alternative forecast, the specific methodology employed is identified. It should be clearly recognized that there are no "best and only" approaches, since different technique highlight different effects, e.g. , an industry survey may give good insight on industry-specific technology changes, but give little insight on the impacts of how potential external changes in national interest rates may affect the industry.

j. Capital formation concerns including availability and rate concerns are a key ingredient to synfuel project development. However, scope, budget, and time precluded a discussion of an analysis of these concerns. A general discussion of these concerns can be found in "Synthetic Fuels," Report by the Subcommittee on Synthetic Fuels of the Committee on the Budget, U.S. Senate, September 27, 1979, Chapter IV, p. 23, and Appendix I, p. 55.

k. Exhibits 5.1 and 5.2 identify respectively the potentially critical material and equipment requirements for coal

liquid plants (and associated mines), and overall selected material and equipment items required.

They both represent a series of computer runs using the ESPM model described in reference 44. The key implications of these tables and reference 44 are:

- for most equipment items, projected requirements represent a relatively small percentage of overall manufacturing capacity
- in general, domestic manufacturers can expand production as demand develops
- in addition to domestic capacity, there is foreign manufacturing capacity that can supplement U.S. domestic capacity
- there are key items, as discussed above in the text (such as draglines), where there may be a potential constraint of a capacity or leadtime nature

Furthermore, as illustrated in Table 5.2, reference 44 assessed for two different deployment schedules, peak needs for equipment as a function of current production capacity. In this regard" "peak" was used to represent the maximum annual equipment requirements associated with the deployment schedules.- Once again, we see that "draglines" and "heat exchangers" are items of concern in that peak requirements are a significant fraction of existing domestic capacity. These peak concerns are further constrained in that some items such as draglines, air separation plants, and large pumps and reactor vessels require substantial supply leadtimes. Although foreign purchases may alleviate potential shortfalls, early programmatic planning can facilitate domestic manufacturing expansions. These plans would include not only equipment planning but planning concerning: transportation needs, capital formation, siting concerns, water needs, and technical personnel needs. These will be discussed later in text.

l. Overall employment statistics are of limited value in assessing potential labor constraints. The shortages which may occur will be for a particular technical or craft skill. For this reason, exhibits 5.3-5.4 are broken down by skill mix. Similarly, since project construction-- as described in later section--is location specific, an overall regional assessment is illustrated in exhibit 5.5. As reference 44 discusses, the key labor constraint concerns are:

- the availability of chemical engineers may be a key limiting factor in the availability of engineering manpower

- the most serious challenge in meeting engineering requirements will probably be in the early peak years, as Exhibit 5.3 shows for design and construction. This simply reflects the early intensive use of these skills in normal project deployment

- that the supply of civil, electrical, industrial, and mechanical engineers will probably not present as severe a concern as meeting chemical engineering requirements (Exhibit 5.3)

- of skilled construction labor needs, the critical needs are those of pipefitters, welders, boiler-makers, and electricians (Exhibit 5.4). For some sparsely settled regions of the nation where there is a limited skilled labor force, this will mean bringing in considerable new labor (such as in the Alaskan pipeline) . Exhibit 5.5 illustrates this regional pattern of potential skilled labor needs.

m. Water supply and availability is of key concern to the siting of synfuel plants. As mentioned in the text (p. 5-13) and in Chapter 2, this is particularly true for arid regions of the West- Under the prevailing system of purchased water rights, most of the available surface water supply in these Western regions has already been allocated. As such, these rights will have to be acquired for prospective projects. It has been estimated in The Nation's Water Resources, the Second National Water Assessment, U.S. Water Resources Council, 'Washington, D.C., vol. A-2, April 1978, that the characteristic maximum water consumption in the most water-scarce areas likely to contain synfuel plants would be about 5% of current consumption. State Water Law in the West: Implications for Energy Development, Los Alamos Scientific Laboratory, January 1979, gives a comprehensive discussion of current water rights, and transfer in the West, especially as they affect potential energy site development.

n. Ranges of shale oil capacity vary greatly depending on key assumptions. As an example, the OTA's "An Assessment of Oil Shale Technology, " June 1980, lists a 1990 production target of 400,000 barrels/day as being "consistent with achieving an efficient and cost-effective energy supply system" (p. 10) and an alternate 1990 production target of 200,000 barrels/day as a target "to maximize ultimate environmental information and production" (p. 11). Similarly, Exxon, in its 1980 Report to the Business Roundtable, lists a target of 8 million barrels/day by the year 2010 in the

Piceance and Uinta Basin. These ranges which depict the uncertainty of many key technical and socioeconomic variables are illustrated in Tables 5-3 and 5-4.

0. As discussed earlier, the determination of site choice for different processes is affected by many factors. There are several critical factors that are common to the siting of any synthetic fuel facility. They have been discussed at length in the literature of both coal and oil shale facilities (Reference Nos. 31, 32 and 33). One such review (Reference No. 32) includes a detailed evaluation of seven representative facilities for various critical factors, which include both physical and institutional aspects. The situations assessed are representative of potential siting situations for coal and oil shale conversion facilities. The critical factors considered are:

- Capital availability
- Industrial marketing decisions such as transportation availability
- Resource depletion
- Air pollution control
- Water availability
- Surface mine reclamation
- Socioeconomic disruption
- ownership of land and the management of federally owned lands

The main objective is to determine on a regional basis the potential for development of a synthetic fuels industry with minimal conflicts. Assessment of the ability to mitigate some of the environmental constraining impacts have been studied (above references) .

Among the characteristics that have been identified and assessed are:

(1) Air Quality Characteristics: Special attention has been paid to constraints due to Prevention of Significant Deterioration and non-attainment areas.

(2) Water Availability: Institutional factors (e.g., competing uses, allocation policies, water rights) as well as physical factors (e.g., stream flows, quality of the water) have been identified.

ejbaa

(3) Socioeconomic Capacity. The capability of communities to adjust successfully to the potential social disturbances associated with the construction and operation of large synthetic fuel facilities have been identified as the key factor in affecting public acceptance. This factor is particularly important for synthetic fuel facilities to be located in western states where the communities are small relative to the size of the facilities. Socioeconomic capacity is evaluated with respect to population size of the affected communities, their infrastructure level of services, and growth history.

(4) Ecological Sensitivity. This factor is evaluated with respect to susceptibility of natural ecosystems to disturbances associated with large scale industrial activity. Waste disposal operations and reclamation of mined lands and disposal sites of spent shales are considered important considerations.

(5) Human Health. There is an undetermined potential risk to both the health of occupational workers employed in the synfuel plants, and to the population surrounding the plants. As discussed in reference 31, the risk factors are still largely undefined because knowledge is lacking about the kinds and quantities of toxic materials to be released from actual synfuel plants. (See

(6) Land ownership. This factor, and particularly the management of federally owned lands, is particularly important in the West. There, the federal government is a major land holder, and some critical lands are owned by Indians. Policies established under the Federal Land Policy and Management Act of 1976, as well as existing management practices are in conflict with extensive exploration and development of coal and oil shale resources and with the siting of synfuel facilities.

P* Table 5-2 shale oil build-up scenarios were constructed using the following iterative process. This same approach was used in the build-up scenarios of coal liquids and gases:

(1) Utilize General Methodological Assumptions stated in footnote (a) (i.e., not supply interruption concerns) .

(2) Specific Approach:

(i) From Table 5-1 develop initial project schedules baseline reflecting "business-as-usual conditions. In developing baseline schedules utilize specific

project information; interviews with industry and government officials and comparisons with other individual and aggregate companions (referenced in Table 5-3)

(ii) After developing initial baseline, iterate by reviewing against above referenced comparisons and additional interviews. Using a modified Delphi-type approval, develop a final baseline schedule.

(iii) using final baseline schedule, repeat steps (i) and (ii) above, under new "upper limit" conditions. These conditions reflect a maximum possible rate-of-growth schedule consistent with pushing material, manpower, and siting concerns discussed in Sections 5.1 and 5.2. They mostly closely reflect an environment of significant governmental fiscal incentives to minimize market commercial risk and accelerate development, as reflected in the economic climate of the fall of 1980. They do, however, reflect utilization of private market forces, and not large-scale direct governmental intervention. For a more detailed discussion of governmental assistance see "Synthetic Fuels, Report of the Senate Budget Committee, September 1979, Chapters IV and V. As such, this "high" scenario does <u>not</u> reflect an emergency planning, oil supply disruption scenario. Such-a scenario, although very useful in its own right, was not in the directed scope of work, and would require significantly different methodological assumptions and techniques.

(iv) After developing a final "high" and "low" scenario, specific scenario characteristics, such as differences in rate of growth, peaking of scheduled outputs, and leveling "off" phenomena were compared to above referenced interviews and literature. A comparison of several of these alternate "scenarios," albeit using different, and mostly proprietary techniques, is given in Table 5-3.

(v) post 2000 deployment schedules are mostly "second-round" decisions which would be based on both results of first round (1980-2000) successes and failures, as well as an assessment of the market needs for synthetic fuels in light of the supply, availability, and price of conventional fuels, as well as end-uses. For these reasons, extreme values (at 2000) reflect first round decisions on deployment, and not second round decisions. As such, they are subject to more uncertainty. A

long-term overall energy supply, demand, and price forecast was outside of the scope of this effort. Also, for the numerous uncertainties in Sections 5.1 and 5.2, as well as the technical and methodological uncertainties inherent in long-range forecasting. A discussion of the methodological and data needs associated with long-range energy forecasting is given in Forecasts of Freight System Demand and Related Research Needs, National Academy of Sciences, 1978, p. 33; "Transportation Modeling and Freight Demand Trends," E. J. Bentz & Associates. A discussion of the supply and availability of energy for future transportation needs is given in Alternate Energy Sources, Part B, Academic Press, 1981, p. 733, Transportation and Energy, Outlook to 2000, E. J. Bentz & Associates.

(vi) There are additional product quality and acceptability concerns associated with the use of the synfuel products. These concerns, already introduced in Chapter 4, are discussed in Section 5.4 and accompanying footnote. They add an additional element of uncertainty into the deployment schedule, but at this early research stage are at best difficult to bracket.

q* From Tables 5-5 and **5-6** and referenced literature and interviews, the low/reed Btu and high Btu coal gas build-up scenarios were constructed from Table 5-7, using the iterative methodology described in foot note p, and the general assumptions outlined in footnote a. As discussed in the text (Section B), particular reference 50 was made to the National Coal Association Coal Synfuel Survey reference as well as detailed proprietary information developed by E. J. Bentz & Associates, and numerous private communications with industry and governmental officials (federal and state). As stated on p. 5-24, the eventual regulatory treatment of high Btu gas (pricing, advances to 'pipelines) will greatly affect the scenario schedules. Although the scenarios assured that high Btu gas will be treated as natural gas, this realization will be affected not only by the treatment of high Btu gas, but also on the pricing schedule of natural gas itself (i.e., natural gas deregulation) . Table 5-8 summarizes comparisons with current alternative forecasts. Note, as discussed in footnote p, these alternative forecasts employed a variety of different proprietary methodological techniques. As such "bottoms-up" comparisons are not appropriate.

r. From Table 5-9, and identified literature and interviews, using the iterative methodology described in footnote p, and the general assumptions outlined in footnote a, Table 5-10 was constructed. Of specific assistance were references 50 and 51, as well as proprietary information developed by

E. J. Bentz & Associates, in the deployment schedules. In brief, indirect liquefaction technology is a known, commercially proven technology. Although on-going R&D will improve this technology (such as alternate gasifier designs), it is building upon a known baseline. Also much of the equipment needed is commercially available. As such, early development in the coal liquids area will utilize indirect liquefaction techniques (including the Mobil-M gasoline process) . Direct liquefaction offers great promise, but requires more R&D to achieve a similar commercial-type status. Also, as discussed in Chapter 4, many of the direct products will have to be upgraded, at additional costs, for use in existing end-use technology. Hence, "direct liquids" will be introduced later in our deployment schedules. Because of the variety and complexity of coal liquid sources, as well as the shale oil liquid contribution to our liquid supply (discussed earlier), additional iterations had to be undertaken sequencing individual supply sources (e.g., shale and indirect liquids earlier) and then reiterating the sums against independent numbered comparisons and previous interview results. As such, the "coal liquids" scenarios--high and low--represented the greatest number of iterations. The comparisons of the developed build-up rates with alternate estimates (derived using different proprietary methodologies) is given in Table 5-12.

s. As discussed in footes a, 'p, q, and 5, Table 5-14 depicts alternative macro-estimates developed by the referenced sources using alternate (and often proprietary) techniques.

t. Table 5-20 developed by distributing on regional basis each of the incremental construction work forces for each of the processes, described in Tables 5-16, 5-17, 5-18, 5-19 and then adding regional sums. In tiers, these regional factors were first obtained using following independent sources:

- reference 34 regional factors developed for coal liquids
- Tables 5-1, 5-5, 5-6, and 5-9
- reference 20 for coal liquids (indirect) and reference 6 for all synthetics
- proprietary information developed by E. J. Bentz & Associates

NOTE: It should be noted that Figure 2-3 on p. 2-4 represents the geological coal resource region. Because such a breakdown does not include all supply resources (e.g., shale) as well as the fact that site location is dependent upon a variety of factors (see footnote o), the

regions chosen for regionalization were the well-known and used (in all the above references) census regions.

u. An example of the diversity of aromatic chemical properties associated with coal-derived gasoline is given in the following table.

Aromatics (Wt %)	Gasoline from Petroleum	Gasoline from SRC-II Naphtha Hydrotreated	Gasoline from EDS Naphtha Hydrocracked	Gasoline from H-Coal Gas-Oil Heavy Hydrocracking
Benzene	.12	18.0	.08	5.1
Toluene	21.8	19.0	12.6	6.5
Alkylbenzene C_8-C_{13}	7.0	27.9	43.6	**14.6**

SOURCE: U.S. Environmental Protection Agency, Research Triangle Park, 1980

APPENDICES

APPENDIX TO CHAPTER 2

Typical Mining Characteristics: Tables 3-8
From Reference: "Technology Characterizations"
U.S. DOE, June 1980

ejb&a

TABLE 3 - Surface Coal Mining—Eastern

ENERGY SYSTEM:

SIZE
- 20-year mine life
- 4 million tons per year
- 102.8 x 10^{12} Btu per year equivalent
- Eastern area mine, Northern Appalachian district

DESCRIPTION
- In the East, modified area mining is generally used in areas where the terrain is gentle (5° to 10° slope) and the overburden does not exceed about 100 feet. Typically, the thickness of the coal bed averages six feet and the efficiency of removal is about 80 percent (in terms of Btu recovered). Blasting with light charge is frequently needed to improve the mining. Overburden from each successive cut is placed in the previous one. Regrading to approximate the original land form is undertaken. Topsoil is replaced and revegetation is begun. Coal is transported to an offsite coal preparation plant.

COMPONENTS	Quantity
power shovels	2
trucks	7
front end loaders	2
scrapers	4
coal shovel	2
drilling equipment	4
graders	2
cable handler & reel	2
bulldozers	8

ENVIRONMENTAL CONCERNS
- aesthetics
- acidic mine drainage contamination of surface and groundwater
- blasting damage and noise pollution
- vehicular emissions
- fugitive dust
- erosion
- altered land use

RESOURCES USED:
(Per 10^{12} Btu Produced)

RESOURCE DEPLETION	
in-place coal	48,438 tons
energy content	12,850 Btu/lb

COAL ANALYSIS	(by weight)
moisture	3.9
volatile matter	34.1
fixed carbon	52.4
ash	9.6
sulfur	2.1
nitrogen	1.1

ENERGY	
diesel fuel	4.0 x 10^9 Btu
electricity	5.9 x 10^5 kWh

LAND	Acres
fixed	0.3
incremental	6.1

WATER	Acre-Feet
consumption	1.7

COSTS	Dollars (1977)
construction	
total construction cost	1.24 x 10^6
other investments and fees	0.68 x 10^6
operation	
general mining cost	0.46 x 10^6
reclamation and sediment control	3 x 10^4

PERSONNEL	Workers
construction	
non-manual, technical	1.0
non-manual, non-technical	0.2
manual	4.7
operation	
non-manual, technical	0.8
non-manual, non-technical	1.1
manual	2.4

RESIDUALS (Per 10^{12} Btu Produced)	GROSS (tons)	NET (tons)
AIR POLLUTANTS		
particulates[1]	0.06	0.02
SO_2	0.1	0.1
NO_2	1.5	1.5
hydrocarbons	0.2	0.2
CO	0.9	0.9
WATER POLLUTANTS		
Total Dissolved Solids	35.6	20.8
Iron	0.4	0.0004
Manganese	0.4	0.1
Aluminum	0.6	0.03
Zinc	0.02	0.002
Nickel	0.006	0.002
Sulfate	16.1	14.3
Total Suspended Solids	4.8	0.4
Iron	0.02	0.004
Ammonia	0.06	0.02
SOLID WASTE[2]		
overburden removal	435	0
runoff treatment	390	0

ENERGY PRODUCT
raw coal - 38,910 tons

(1) Assumes a 60% reduction in fugitive dust emissions through dust suppression.
(2) Assumes all solid waste is returned to mining pits.

SOURCES: The MITRE Corporation, Annual Environmental Analysis Report, 1977.
University of Oklahoma, Energy Alternatives: A Comparative Analysis, 1975.
TRW, Mass Environmental Data Book, Volume IV, 1978.
Hittman Associates, Inc., Environmental Impacts, Efficiency, and Cost of Energy Supply and End Use, Volume I, 1974.
Bechtel Corporation, Energy Supply Planning Model, 1978.
Bureau of Mines, Basic Estimated Capital Investment and Operating Costs for Coal Strip Mines, 1976.
Energy and Environmental Analysis, Coal and Profitability, 1979.
Bureau of Land Management, Federal Coal Management Program, Final Environmental Statement, 1979.

TABLE 4 - Surface Coal Mining—Western

ENERGY SYSTEM:

SIZE
- 5 million tons per year
- 1.1×10^{14} Btu per year equivalent
- 30 year mine life
- Western area mine, Powder River Basin

DESCRIPTION:
- In Wyoming and Montana, the two states which will account for most of the increase in production in the West, area strip mining is the dominant surface mining technique. After segregating the topsoil for subsequent reclamation purposes, and after blasting, the overburden (averaging 70 feet) is removed in long parallel cuts. The now exposed and blasted coal seam (averaging 25-30 feet) is removed (89 percent efficiency in terms of Btu recovered). With the exception of the first cut, overburden from each cut is placed in the previous one. Coal is loaded into trucks for transport to a coal cleaning area. Reclamation consists of grading the spoil, replacing the topsoil and initiating revegetation.

COMPONENTS	Quantity
• trucks	11
• front end loaders	2
• scrapers	8
• draglines	2
• bulldozers	12
• drilling equipment	6
• graders	2
• coal shovel	2
• cable handler and reel	2

ENVIRONMENTAL CONCERNS
- fugitive dust and vehicular emissions
- reclamation
- alkaline mine drainage
- erosion
- noise
- aesthetics
- altered land use

RESOURCES USED:
(Per 10^{12} Btu Produced)

RESOURCE DEPLETION	
total in-place coal	59,449 tons
heat content	9,650 Btu/lb

COAL ANALYSIS	% (by weight)
moisture	21.5
volatile matter	34.5
fixed carbon	39.6
ash	4.4
sulfur	0.4
nitrogen	1.2

ENERGY	
fuel	0.8×10^9 Btu
electricity	1.1×10^5 kWh

LAND	Acres
fixed	0.4
incremental	1.8

WATER	Acre-feet
consumption	3.8

COSTS	Dollars (1977)
construction	
total construction cost	1.32×10^6
other investments and fees	0.23×10^6
operation	
general mining cost	0.28×10^6
reclamation and sediment control	2×10^3

PERSONNEL	Workers
construction	
non-manual, technical	1.1
non-manual, non-technical	0.2
manual	2.2
operation	
non-manual, technical	0.7
non-manual, non-technical	0.9
manual	1.9

RESIDUALS (Per 10^{12} Btu Produced)	GROSS (Tons)	NET (Tons)
AIR POLLUTANTS		
Particulates[1]	0.2	0.08
SO_2	0.1	0.1
NO_x	2.0	2.0
hydrocarbons	0.2	0.2
CO	1.2	1.2
WATER POLLUTANTS		
Total Dissolved Solids	90.9	23.9
Iron	0.005	0.005
Manganese	0.02	0.02
Aluminum	0.006	0.006
Zinc	0.005	0.005
Nickel	0.001	0.001
Sulfate	41.1	32.7
Total Suspended Solids	3.8	2.3
Iron	0.002	0.02
Ammonia	0.1	0.2
SOLID WASTE[2]		
overburden removal	745	0
runoff treatment	NA	0

ENERGY PRODUCT
raw coal - 52,910 tons

(1) Assuming 60% reduction in fugitive dust emissions through dust suppression.
(2) Assumes all solid waste is returned to mining pits.

SOURCES: The MITRE Co po on Ano Env comm Ano
Un Oh home Com Ano , 1975.
Bd Pa Da
. Environmental Impacts and Cost of Energy Supply and End Use, Volume I, 1976.
far Supply Planning Mod
1976.
Environmental Statement, 1979.

e j b &a

TABLE 5 - Underground Coal Mining—Eastern

ENERGY SYSTEM:

SIZE
- 2 million tons per year
- 51.4×10^{12} Btu per year 'equivalent'
- 20 year mine life

DESCRIPTION
- The mining involves driving main entries with production entries normal to the main entry on the right and left. As mining advances on one side of the main entry, rooms are excavated in the five foot coal seam. The strata above the seam is supported by pillars of coal. After an entire section is mined, part of the coal in the pillar is recovered (overall, about 57 percent recovery is possible) as a return to the main entry is made. With a mechanized continuous miner, many of the mining operations performed in the same section are executed simultaneously. An electric powered continous miner either bores, digs or rips the coal from the working face. Coal is then loaded into a ratio feeder at the tail piece of a unit belt conveyor.

COMPONENTS	Quantity
• mainline belt conveyor	1
• roof bolting machines	13
• ventilating fan	1
• continuous mining machines	11
• loading machines	11
• shuttle car	22
• ratio feeder	11
• rock duster	12
• supply motor	5
• mainline power center	5
• section rectifier	11
• auxiliary fan	13
• section belt power center	7

ENVIRONMENTAL CONCERNS
- solid waste disposal
- runoff from waste piles
- acid mine drainage
- subsidence of surface area
- noise

RESOURCES USED:
(Per 10^{12} Btu Produced)

RESOURCE DEPLETION	
total in-place coal	68,264 tons
energy content	12,850 Btu/lb

COAL ANALYSIS	(by weight)
moisture	3.9
volatile matter	34.1
fixed carbon	52.4
ash	9.6
sulfur	2.1
nitrogen	1.1

ENERGY	kWh
electricity	7.2×10^5

LAND	Acres
fixed	0.3
incremental	11.7

WATER	Acre-Feet
consumption	2.3

COSTS	Dollars (1977)
construction	
manpower	1.7×10^5
material	1.1×10^5
equipment	3.8×10^5
other investments and fees	7.1×10^5
operation	
manpower	4.9×10^5
material	0.8×10^5
equipment	1.4×10^5
other costs	3.6×10^5

PERSONNEL	Workers
construction	
non-manual, technical	1.3
non-manual, non-technical	0.1
manual	4.3
operation	
non-manual, technical	3.9
non-manual, non-technical	5.2
manual	12.4

RESIDUALS AND PRODUCTS: (Per 10^{12} Btu Produced)	GROSS (Tons)	NET (Tons)
AIR POLLUTANTS		
Air emissions from equipment are not considered a problem in underground extraction since most equipment is electric powered.		
particulates	negligible	
SO_2	negligible	
NO_x	negligible	
hydrocarbons	negligible	
CO	negligible	
aldehydes	negligible	
WATER POLLUTANTS		
Total Dissolved Solids	396.4	392.0
Iron	22.4	0.02
Manganese	0.6	0.2
Aluminum	3.6	1.7
Zinc	0.1	0.02
Nickel	0.06	0.02
Sulfate	197.8	174.9
Strontium	0.2	0.2
Chloride	8.6	12.7
Fluoride	0.1	0.1
Calcium carbonate*	101.7	138.3
Total Suspended Solids	19.0	1.7
Iron	7.0	0.2
Ammonia	1.0	0.3
SOLID WASTE		
from sinking the mine shaft	2.5	2.5
from treating mine water runoff	0	2,090
from extraction process	NA	NA
ENERGY PRODUCT		
raw coal - 38,910 tons		

*Calcium carbonate net emissions are greater than calcium c bons om ons ba um bons ad ed wa wa as part of the treatment process.

SOURCES: The MITRE Corporation, Annual Environmental Analysis Report, 1977.
University of Oklahoma, Energy Alternatives: A Comparative Analysis, 1975.
TRW, Mass Environmental Data Book, Volume IV, 1978.
Hittman Associates, Inc., Environmental Impacts, Efficiency, and Cost of Energy Supply and End Use, Volume I, 1974
Bechtel Corporation, Energy Supply Planning Model, 1978.
Bureau of Mines, Basic Estimated Capital Investment and Operating Costs for Coal Strip Mines, 1976.
Bureau of Land Management, Federal Coal Management Program, Final Environmental Statement, 1979.

e j b&a

TABLE 6 -

Surface Oil Shale Mining

ENERGY SYSTEM:

SIZE
- 73,700 tons of raw shale per day
- 0.413 x 10^{12} Btu/day
- 2,800 Btu/pound of raw shale
- 30 gallons/ton shale oil content
- mine operates 320.5 days/year
- 24.2 x 10^{6} tons of shale mined/year
- total annual output is 136.67 x 10^{12} Btu
- mine life is 30 years

DESCRIPTION
- In surface mining, the overburden is removed exposing the underlying shale. Shale is mined using the bench technique. Shale is fractured through drilling and blasting and transported by trucks to primary crushing site.

COMPONENTS
- drilling equipment
- excavation equipment (cranes)
- crushers
- trucks

ENVIRONMENTAL CONCERNS
- air quality deterioration
- noise
- water requirement
- contamination of underground water supplies with saline mine water

RESOURCES USED:
(Per 10^{12} Btu Produced)

FUEL	Tons
raw unmined shale	178,450
ENERGY	
electricity for operating drilling equipment and trucks	NA
COMPOSITION	**% (by weight)**
organic material	17.1
water	1.4
inorganic material	81.5
LAND(1)	**Acres**
mine development	0.8
disposal of permanent overburden	7.4
storage of spent shale	1.1
disposal of spent shale	1.1
WATER	**Acres-Feet**
mining and crushing	2.8 (2.2 - 3.3)
COSTS(2)	**Dollars (1978)**
construction	
manpower	226,033
materials	28,809
Qutpmoat	339,649
cher cost	14,797
total	609,283
operation & maintenance	NA
PERSONNEL	**Workers**
construction	NA
operation & maintenance	NA

RESIDUALS AND PRODUCTS:
(Per 10^{12} Btu Produced)

AIR POLLUTANTS	Tons
particulates	21.79
SO_2	0.21
NO_x	2.85
hydrocarbons	3.44
CO	1.00
WATER POLLUTANTS	
probability of contamination of underground water by mine water	LOW
SOLID WASTE	
negligible (.00 Processing)	
ENERGY PRODUCT	**Tons**
mined shale rock	178,450

(1) This represents land committed to use over the lifetime of the plant, divided by the annual output of the plant, expressed in trillion Btu.
(2) This represents total cost of constructing the plant, divided by the annual output of the plant, expressed in trillion Btu.

SOURCES: Environmental Protection Agency, Monitoring Environmental Impacts of the Coal and Oil Shale Industries, 600/7-77-015, February 1977.
Cameron Engineers Incorporated, Synthetic Fuels Handbook, 1975.
Department of Energy, Draft Environmental Impact Statement for the (updated) Prototype Oil Shale Leasing Program, 1979.
University of Oklahoma, Energy Alternatives: A Comparative Analysis, 1975.
Bechtel Corporation, Energy Supply Planning Model, 1978.

ejb&a

TABLE7 - UndergroundOilShale Mining

ENERGY SYSTEM:

SIZE
- 73,700 tons of raw shale per day
- 0.413 x 10^{12} Btu/day
- 2,800 Btu/pound of raw shale
- 30 gallons/ton shale oil content
- mine operates 328.5 days/year
- 24.2 x 10^{6} tons of shale mined/year
- total annual output is 135.67 x 10^{12} Btu
- mine life is 30 years

DESCRIPTION
- Underground mining uses room and pillar technique. The oil shale deposit is entered through a tunnel dug into the side of a valley where an outcrop appears. Pillars are left in place to provide roof support at appropriate intervals. Extraction is also accomplished by drilling and blasting. The broken shale is transported to portable crusher for primary crushing.

COMPONENTS
- drilling equipment
- excavation equipment (cranes)
- crushers
- trucks

ENVIRONMENTAL CONCERNS
- air quality deterioration
- noise
- water requirement
- contamination of underground water supplies with saline mine water

RESOURCES USED:
(Per 10^{12} Btu Produced)

FUEL	Tons
raw unmined● halo	178,450
ENERGY	
electricity for operating drilling equipment and trucks	NA

COMPOSITION	% (by weight)
organic material	17.1
water	1.4
inorganic material	81.5

LAND(1)	Acres
mine development	0.15
crushing	2.93

WATER	Acre-Feet
mining and crushing	2.8 (2.3 - 3.3)

COSTS	Dollars (1978)
construction(2)	
manpower	164,224
materials	43,249
● qulpanc	254,842
other cost	82,341
total	544,655
● Nrttl= & maintenance	NA

PERSONNEL	Workers
construction	484
operation & maintenance	NA

RESIDUALS AND PRODUCTS:
(Per 10^{12} Btu Produced)

AIR POLLUTANTS	Tons
particulates	4.46
SO_2	0.012
NO_x	0.17
hydrocarbons	0.019
CO	0.10

WATER POLLUTANTS
probability of● dIBO contamination● r under-ground water with● lm4 water

SOLID WASTE
negligible (see Processing)

ENERGY PRODUCT	Tons
● trod ● IM1O rock	178,450

(1) This represents land committed to use over the lifetime of the plant, divided by the annual output of the plant, expressed in trillion Btu.
(2) This represents total cost of constructing the plant, divided by the annual output of the plant, expressed in trillion Btu.

SOURCES: Environmental Protection Agency, Monitoring Environmental Impacts of the Coal and Oil Shale Industries, 600/7-77-015, February, 1977.
Cameron Engineers Incorporated, Synthetic Fuels Handbook, 1975.
Department of Energy, Draft Environmental Impact Statement for the (updated) Prototype Oil Shale Leasing Program, 1978.
University of Oklahoma, Energy Alternatives: A Comparative Analysis, 1975.
Bechtel Corporation, Energy Supply Planning Model, 1978

ejb&a

TABLE 8 - Coal Beneficiation

ENERGY SYSTEM:

SIZE
- Process 2,857,000 tons of run-of-mine (ROM) coal each year to produce 2 million tons of clean coal
- Hourly capacity 950 tons of ROM coal
- Operates 3,000 hours per year, representing ten shifts per week, 230 days per year
- 20 year plant life
- 87.5% efficiency (in terms of Btus)
- Yield by weight is 70%

DESCRIPTION
- Coal beneficiation is a process for upgrading coal prior to its use for metallurgical or utility purposes. The purpose of beneficiation is to remove impurities (i.e. ash and/or sulfur) from raw coal. The degree of beneficiation depends on the type of coal and its ultimate use. The system described on this summary sheet (level I per Phillips et al.) is a relatively intense procedure. It removes more sulfur and ash than most other types of beneficiation, and it is also more costly. The resultant cleaned coal would be used for metallurgical purposes.

COMPONENTS
- scalping screen
- crusher
- rotary breaker
- vibrator screens
- jigs
- [illegible] separating tables
- thickeners
- filters
- concentrating tables or hydrocleaners
- flotation circuits
- thermal drying

ENVIRONMENTAL CONCERNS
- particulate emissions
- solid waste disposal
- water contamination from settling pond overflow and/or refuse pile runoff
- possible ground water contamination from [illegible] pond leaching
- noise

RESOURCES USED:
(Per 10^{12} Btu Produced)

FUEL	Tons
run-of-mine (ROM) or raw coal (assuming one ton of ROM coal has an energy content of 11 to 11 million Btus per ton)	51,945

ENERGY[1]	
electricity	2.8×10^3 kWh
oil	5.9×10^6 Btu

LAND	Acres[2]
washing plant	0.1
loading facility	1.8
settling pond	2.3

WATER	Acre-Ft.
consumption	3.7

COSTS	Dollars (1976)
construction	4.3×10^5
operation and maintenance	3.2×10^5

PERSONNEL	Workers
construction (1 year)	8.1
operation and maintenance	1.5

RESIDUALS AND PRODUCTS:
(Per 10^{12} Btu Produced)

AIR POLLUTANTS	Tons (Gross)	Tons[3] (Net)
particulates	91	0.9
SO_2	2.7	0.005
NO_x	1.9	0.6
hydrocarbons	1.1	0.1
CO	5.4	0.2

WATER POLLUTANTS	Tons (Gross)	Tons[3] (Net)
total dissolved solids	141	11
iron	0.2	0.007
manganese	0.2	0.03
aluminum	1.1	0.04
zinc	0.04	0.005
nickel	0.01	0.00)
sulfates	98	18
total suspended solids	9,870	0.6
iron	4.4	0.06
ammonia	0.2	0.05

SOLID WASTE	Tons[4]
primary breaking	0
coarse cleaning[5]	2
raw-coal sizing	0
primary cleaning	10,157
froth flotation	5,341
thermal drying	0
breaking 004 [illegible] ltlS@	2
total	15,502

HEAT
little or none

NOISE
Noise may affect workers involved in cleaning coal, but there should be little or no adverse impact on receptors near beneficiation PIOO1O.

ENERGY PRODUCT	Tons	Heat Content
cleaned coal	36,360	13,750 Btu/lb

(1) These figures were calculated assuming an energy content of 12,000 btu/lb of coal (Hittman, 1974). They are generalized averages (assuming an energy efficiency of 91.3%) and 40 gal of PQ17 to elaborate (i.e. level II) beneficiation in particular.

(2) These coefficients may be subject to error depending on the data source presented only the fixed amount of land used without specifying the plant's annual output of cool. In calculating these coefficients, it was assumed here that plant output was the max. obtainable in the "size" section of this sheet.

(3) These figures are weighted averages based upon regional coefficients projected by SEAS for 1979. The regional coefficients were weighted in terms of Btus used. Each of the coefficients shown on this sheet is control to total national tons of residual divided by total national Btu output. These figures include residuals from refuse piles and the beneficiation process itself. They are [illegible] that SO2 in coal for pore-throat plants or closed cycle [illegible] that if refuse is treated. An [illegible] of 90% (in Btus) was [illegible].

(4) Based on [illegible] averages in [illegible].

SOURCES: Phillips, Peter and Paul DeMarco, "Assessing the Economics of Steam Coal Preparation", Coal Mining and Processing, September, 1977.
DOE and EPA, Engineering/Economic Analysis of Coal Preparation with SO2 Cleanup Processes, 1978.
Hittman Associates, Environmental Impacts, Efficiency, and Cost of Energy Supply and End Use, 1974.
The MITRE Corporation, Annual Environmental Analysis Report, 1977.
University of Oklahoma, Energy Alternatives: A Comparative Analysis, 1975.
Schmidt, Richard A., Coal in America, 1979.
McGraw Hill Mining Information Services, Keystone Coal Industry Manual, 1977.
Bureau of Land Management, Federal Coal Management Program, Final Environmental Statement, 1979.

ejb&a

APPENDIX TO CHAPTER 5, A: STATUS OF PROCESS DEVELOPMENT

The status of development of coal conversion and oil shale retorting both in this country and abroad are reviewed at length in the literature (Rogers and Hill, 1979; National Coal Association, 1980; Fluor Engineers and Constructors, Inc., 1979a,b,c) .

The status of synfuel commercialization is summarized in the following tables:

- "Table A: Coal Gasification (Fluor Engineers and Constructors, Inc., 1979a) .
- Table B: Coal Liquefaction (Fluor Engineers and Constructors, Inc., 1979b) .
- Table C: Shale Oil Retorting (Fluor Engineers and Constructors, Inc., 1979c) .

These tables also review the major characteristics of these technologies. More details about the processes are given in Bentz, E.J., 1980.

ejb&a

TABLE A-1
COAL GASIFICATION - COMMERCIALLY PROVEN PROCESSES

NAME	DEVELOPERS AND SPONSORS	COMMERCIAL PLANTS	FUTURE PLANS FOR PROCESS	FEEDSTOCKS	PRODUCTS	TYPE OF REACTOR	OXIDANT	OPERATING PRESSURE	HEATING VALUE OF PROCESS GAS	PROCESS ADVANTAGES	PROCESS DISADVANTAGES	TYPICAL GASIFIER SECTION OUTLET COMPOSITION	PROPOSED GASIFIER REQUIREMENTS FOR A 250 MM SCFD COMMERCIAL PLANT	NOTES
KOPPERS-TOTZEK	Koppers Company, Inc.	Commercial – 16 plants since 1952	Engineering studies being performed now for industrial application	All ranks of coal, tar, pitch, coke, and other carbonaceous materials	Synthesis gas and sulfur	atmosphere flow	Oxygen	Atmos.	Medium/High	1) No by-products other than slag and sulfur 2) Wide range of feed 3) Quick turn down ratio 4) Feed can be changed	1) Low pressure – Atmos 2) Requires O_2 plant 3) Hi temp. gasifier operation 3000°F 4) High methanation req'mts for pipeline gas 5) High compression req'mts for pipeline gas	Mol % (H_2O FREE) CH_4 0 H_2 30 CO 60 CO_2 8 H_2S – N_2 –	Gasifier can handle 850 T/D coal each. 18-20 gasifiers required	
LURGI	Lurgi GmbH	To date has built 14 commercial plants utilizing their gasifiers	Presently engineering 8 plants for the U.S. and Canada	Flexible and capable of handling all types, except strongly caking coals	Fuel gas suitable for SNG, by-product oils, and sulfur	Moving Bed	Air Oxygen	Medium Medium	Low Medium/High	1) Only pressure gasifiers that have long term commercial operation	1) Requires O_2 plant, if SNG is the product 2) Requires compression of product gas 3) Requires sized coal	Mol % (H_2O FREE) CH_4 10 H_2 38 CO 24 CO_2 28 H_2S – N_2 –	Gasifier section would consist of 25-30 fixed bed reactors designed to operate at 400-450 PSI	Low BTU gas in air blown case
WELLMAN-GALUSHA	Wellman Engineering Co	Commercial – 28 plants in operation	Construction in progress for additional plants	Non-caking coals or coke	Low BTU gas, by-product oils, and sulfur	Moving-Bed	Air	Atmos.	Low	1) Small scale (suitable for individual plant installation)	1) Low pressure – Atmos 2) Requires sized coal 3) Low BTU gas must be used on or near site	Mol % (H_2O FREE) CH_4 3 H_2 15 CO 29 CO_2 3 H_2S N_2 50	Small scale operation – Not suitable	Pressurized operations are under pilot plant work
WINKLER	Winkler	Commercial – 16 plants in operation	Engineering studies in preparation for commercial units	Most ranks of coal can be used	Synthesis gas and sulfur	Fluid-Bed	Air Oxygen	Atmos Atmos.	Low Medium/High	1) H C Liquors can be added during 2) No tars or oils produced	1) Requires O_2 plant for Hi BTU gas 2) Low pressure – Atmos 3) Coal drying may be req'd 4) 70% of Ash Overhead 5) Reactor brick lined 6) High methanation req'mts as only 2% CH_4 produced 7) High compression req'd for pipeline gas req'mts	Mol % (H_2O FREE) CH_4 2 H_2 35 CO 48 CO_2 15 H_2S – N_2 –	10-20 gasifiers required	Low BTU gas in air blown case

eib&a

TABLE A-1 (continued)

COAL GASIFICATION - PROCESSES READY FOR DEMONSTRATION

NAME	DEVELOPERS AND SPONSORS	PILOT PLANTS	FUTURE PLANS FOR PROCESS	FEEDSTOCKS	PRODUCTS	TYPE OF REACTOR	OXIDANT	OPERATING PRESSURE	HEATING VALUE OF PROCESS GAS	PROCESS ADVANTAGES	PROCESS DISADVANTAGES	TYPICAL GASIFIER SECTION OUTLET COMPOSITION	NOTES
BGC/LURGI SLAGGING	Being developed by British Gas Council and Lurgi under the sponsorship of 15 American Companies	A Lurgi gasifier at Westfield was converted to slagging operation	Design of 3800 TPD plant for Noble County, Ohio is underway	Most coals – except high ash, high moisture coals	Fuel gas suitable for SNG and sulfur	Moving-Bed	Oxygen	Medium	Medium/ igh	1) High efficiency 2) High gas output 3) Lower steam requirements than conventional Lurgi	1) Requires O_2 plant 2) Requires compression of product gas if pipeline gas is required 3) Requires sized coal	Mol % (H_2O FREE) CH_4 8 H_2 28 CO 60 CO_2 3 H_2S – N_2 1	The slagging gasifier should have at least three times the output of a standard Lurgi gasifier
SHELL-KOPPERS	Shell Internationale Research	Pilot plant in Amsterdam, the Netherlands. Capacity 6 TPD. Operating since 1976	on 150 TPD plant Harburg, Germany early 1977	All coals	Synthesis gas and sulfur	Entrained-Flow	Oxygen	Low	Medium	1) Requires no pretreatment of feed 2) No by-products other than slag and sulfur 3) Gasifier is entrained flow	1) Requires O_2 plant 2) Requires compression of product gas if pipeline gas is required	Mol % (H_2O FREE) CH_4 1 H_2 30 CO 67 CO_2 1 H_2S 1 N_2 –	Pressurized system increasing capacity and reduces compression requirements over conventional Koppers-Totzek
TEXACO	Being developed by Texaco Development Corp.	M tabell Capacity	Texaco and SCE to retrofit 65MW power station in Coolwater, CA.	All coals	Synthesis gas and sulfur	Entrained-Flow	Air Oxygen	Medium Medium	Low Medium/High	1) Requires no pretreatment of feed 2) Gasifier is entrained flow 3) No by-product char 4) Slurry feed system	1) Requires O_2 plant 2) Requires compression of product gas if pipeline gas is required	Mol % (H_2O FREE) CH_4 1 H_2 45 CO 45 CO_2 8 H_2S – N_2 –	ased tial ide ion xperience

e j b &a

TABLE A-1 (continued)

COAL GASIFICATION - PROCESSES READY FOR COMMERCIAL DEVELOPMENT

NAME	DEVELOPERS AND SPONSORS	PILOT PLANTS	FUTURE PLANS FOR PROCESS	FEEDSTOCKS	PRODUCTS	TYPE OF REACTOR	OXIDANT	OPERATING PRESSURE	HEATING VALUE OF PROCESS GAS	PROCESS ADVANTAGES	PROCESS DISADVANTAGES	TYPICAL GASIFIER SECTION OUTLET COMPOSITION	NOTES
BCR	Bituminous Coal Research with DOE funding	1 2 TPD in operation at Monroeville, Pennsylvania			Low BTU gas and sulfur	Fluid Bed	Air	Medium	Low	1) No residual char 2) Does not require O_2 plant	1) Coal requires pretreatment 2) Requires particulate and sulfur removal	N A	
BI-GAS	Being developed by Bituminous Coal Research, Inc with financing from ERDA and AGA	Pilot plant in Homer City, Pa , capacity 120 TPD, operating since 1976	None until P P tests have been run and evaluated	All coals	Fuel gas suitable for SNG and sulfur	Entrained Flow	Air Oxygen	High High	Low Medium/High	1) Requires no pretreatment of feed 2) Gasifier is entrained flow 3) Does not produce char by-product 4) Slurry feed system	1) Requires O_2 plant	Mol % (H_2O FREE) CH_4 17 H_2 24 CO 44 CO_2 14 H_2S 1 N_2 -	The gasifier may also be operated on air rather than oxygen at moderate system pressures producing a low BTU gas
B&W	Being developed by B&W with financing from EPRI	5 TPD pilot plant under construction, Alliance, Ohio		All coals	Synthesis gas and sulfur	Entrained Flow	Air Oxygen	Low Low	Low Medium/High	1) Requires no pretreatment of feed 2) Gasifier is entrained flow 3) No by-product char	1) Requires O_2 plant 2) Requires compression of product gas	Mol % (H_2O FREE) CH_4 - H_2 30 CO 58 CO_2 9 H_2S 1 N_2 1	Operation with air will produce a low BTU gas Moderate sized (17 TPH) plant was operated successfully in 1950's
C E	Being developed by Combustion Engineering with financing from EPRI	120 TPD pilot plant under construction, Windsor, Conn.	Detailed design of a 5 TPH unit underway	All coals	Low BTU gas and sulfur	[illegible]	Oxygen	Atmos.	Low Medium/High	1) Does not require O_2 plant 2) Requires no pretreatment of feed 3) No by-product char 4) Gasifier is entrained flow	1) Atmospheric pressure 2) Requires compression of product gas 3) Low BTU gas - must be used on or near site	Mol % (H_2O FREE) CH_4 - H_2 12 CO 23 CO_2 5 H_2S - [illegible] 60	Operation with oxygen will produce an intermediate BTU gas, which can be upgraded to pipeline gas
[illegible] ALLEGHENY	Being developed by Conoco Coal Development Company with financing from DOE and AGA	A 48 TPD pilot plant, located in Rapid City, S D	[illegible] plant underway	[illegible] mites and possibly sub bituminous	Fuel gas suitable for SNG and sulfur					1) Does not require O_2 plant 2) Does not produce char by-product 3) Requires no pretreatment of feed	1) Good only for highly reactive lignite and sub-bituminous coals 2) Requires compression of product gas 3) Requires sulfur removal on flue and synthesis gas streams 4) Large number of fluidized beds may present a control problem.	Mol % (H_2O FREE) CH_4 21 H_2 54 CO 18 CO_2 7 H_2S - N_2 -	
COGAS	Joint venture of Consolidated Natural Gas, FMC Corp , Panhandle Eastern Pipeline, and Tennessee Gas Pipeline	Successful pilot plant operation at 100 TPD Located at Leatherhead, England	Planning integration of coal pyrolysis and and char gasification	By-product char from pyrolysis	Synthesis gas and sulfur					1) Does not require O_2 plant	1) Requires compression of product gas 2) Requires sulfur removal on flue and synthesis gas streams	Mol % (H_2O FREE) CH_4 1 H_2 53 CO 24 CO_2 20 H_2S - N_2 2	Could possibly gasify by-product char from any gasification process
FOSTER-WHEELER	Foster Wheeler with support from DOE	400 TPD pilot plant at Sioux Falls, S D. scheduled for completion late 1977	-	Most coals	Low [illegible] gas and sulfur	[illegible]ined [illegible]ow	[illegible]	Medium	Low	1) Requires no pretreatment of feed 2) Gasifier is entrained flow 3) No by-product char	1) Requires sized and dryed coal 2) Requires particulate and sulfur removal	N A	
GEGAS	Being developed by G E with joint funding by G E and EPRI	18 TPD pilot plant onstream since 1976		All coals - except strongly coking	Low BTU gas, tar, and sulfur	Moving Bed	Air Oxygen	Medium Medium	Low Medium/High	1) Does not require O_2 plant 2) Does not produce char by-product	1) Requires compression of product gas 2) Low BTU gas - must be used on or near site		Innovations involving coal extrusion feed systems and membrane acid gas removal systems are being developed. Operation with oxygen will produce an intermediate BTU gas, which can be upgraded to pipeline gas

TABLE A-1 (continued)

COAL GASIFICATION - PROCESSES READY FOR COMMERCIAL DEVELOPMENT

NAME	DEVELOPERS AND SPONSORS	PILOT PLANTS	FUTURE PLANS FOR PROCESS	FEEDSTOCKS	PRODUCTS	TYPE OF REACTOR	OXIDANT	OPERATING PRESSURE	HEATING VALUE OF PROCESS GAS	PROCESS ADVANTAGES	PROCESS DISADVANTAGES	TYPICAL GASIFIER SECTION OUTLET COMPOSITION	NOTES
HYDRANE	Being developed at Pittsburgh Energy Research Center by ERDA	Bench scale 10 lb/hr integrated unit	Scale up to 24 TPD pilot unit is planned	All coals	High BTU gas, char, and sulfur	Fluid Bed	Oxygen	High	High	1) No pretreatment of coal required 2) No oxygen introduced into the gasifier 3) Minimum methanation required 4) High thermal efficiency	1) Dilute phase reaction coupled with fluid bed reactor may be difficult to control and operate 2) By product char produced	Mol % (H_2O FREE) CH_4 33 H_2 23 CO 4 CO_2 H_2S N_2	
HYGAS	Being developed by Institute of Gas Technology with financing from ERDA and AGA	Pilot Plant, Chicago, Ill., capacity 75 TPD operating since 1972	Preliminary engineering design for 80 MM SCFD plant	Illinois high volatile bituminous and Montana lignite (two extremes) As slurry in recycle oil	Fuel gas suitable for SNG, char, sulfur and by-product oil					1) Slurry feed system 2) Operates at high pressure does not require compression	1) Requires O_2 plant 2) Produces by product oil 3) Requires pretreatment of some coals	Mol % (H_2O FREE) CH_4 19 H_2 30 CO 24 CO_2 26 H_2S 1 N_2	Work on the electrothermal variation has been discontinued
ROCKGAS	Being developed by Rockwell International Corp with financing from DOE	Bench scale gasifier	Design and construction of a 5 TPH plant is planned	Coal, coke, or fuel oil	Low BTU gas and sulfur					1) Wide range of feedstocks 2) Sulfur removed in the melt	1) Corrosion caused by the sodium carbonate melt 2) Low BTU gas must be used on or near site	Mol % (H_2O FREE) CH_4 2 H_2 12 CO 25 CO_2 4 H_2S N_2 57	With modification a synthesis gas can be produced which can be upgraded to pipeline gas
SYNTHANE	Being developed at Pittsburgh Energy Research Center by DOE	Pilot plant, Bruceton, PA., capacity 72 TPD Operating since 1976	Testing and evaluation of pilot plant	Supposedly flexible and capable of handling all types	Fuel gas suitable for SNG, char, and sulfur					1) Operates at high pressure	1) Requires O_2 plant 2) By-product char produced	Mol % (H_2O FREE) CH_4 25 H_2 28 CO 17 CO_2 29 H_2S 1	Substitution of air for oxygen to the gasifier will produce a low BTU raw gas
U GAS	Institute of Gas Technology		Planning a demonstration gasifier to fuel a 50-100 MW power generation plant	All coals	Low BTU gas and sulfur					1) Does not require O_2 plant 2) Does not produce char by-product	1) Requires pretreatment (Caking coals) 2) Requires sized coal 3) Low BTU must be used on or near site	Mol % (H_2O FREE CH_4 H_2 13 CO 12 CO_2 14 H_2S	Operation with oxygen will produce an intermediate BTU gas, which can be upgraded to pipeline gas
UNION CARBIDE/ BATTELLE	Developed by Union Carbide - financed by DOE and AGA	25 TPD pilot plant in construction at West Jefferson, Ohio		All coals	Synthesis gas and sulfur					1) Does not require O_2 plant 2) No char produced	1) Requires two fluidized beds 2) Hi temp gasifier operation above 1800°F 3) Requires compression of product gas	Mol % (H_2O FREE CH_4 H_2 59 CO 37 CO_2 3 H_2S 1 N_2	May also be used to supply hydrogen for other processes
...STINGHOUSE	Being developed by Westinghouse Research under a cost-shared partnership of DOE and five companies	1,200 lb/hr process development unit at Waltz Mill, Pa.	Scale up the gasifier to 5 TPH is planned	All coals	Low BTU gas and sulfur					1) Does not require O_2 plant 2) Does not produce char by-product	1) Low BTU gas - must be used on or near site	Mol % (H_2O FREE CH_4 3 H_2 15 CO 19 CO_2 9 H_2S N_2 54	The overall program is directed toward the operation of a combined cycle power plant utilizing a 55 to 60 tons of coal per hour commercial sized gasifier system

TABLE A-2
COAL LIQUEFACTION — PYROLYSIS PROCESS

	DE OPE	FEEDSTOCK	HE... SOURCE	...OR SYSTEM	CONVERSION CONDITIONS	PRODUCT YIELDS	REMARKS	PILOT PLANT	...PLANS FOR PROCESS	PROCESS ADVANTAGES	PROCESS DISADVANTAGES
LURGI-RHURGAS	Lurgi Ruhrgas	Lignite Sub-bituminous Bituminous	Hot char recycle	Mechanical Mi...	mospher essure 00°	000 .../ton char BBL/ton tar	...condu... U S shale but not on U S coal	,000 ... commercial plant operating on European brown coal		1 Commercially proven	1 Mechanical mixing 2 Product char handling
CO...	MC Corporation	... Sub-bituminous Bituminous	Hot flue gas	Mul iple fluid beds	8 10 psig 560-1800°F	1200 LB/ton char 1 BBL/ton oil 8000 SCF/ton gas (276 BTU/SCF)		Successfully piloted in 36 TPD plant, design of commercial plant completed	Installation of 2200 TPD plant in combination with COGAS Process — Perry County, Illinois		1 Limited to low sulfur coals 2 Caking coals require pretreatment
TOSCOAL	The Oil Shale Corporation	Sub-bituminous	Hot ceramic ball recycle	Resort vessel	Atmospheric 800-870°F	1000 LB/ton char 0 3-0 5 BBL/ton oil 1700 SCF/ton gas (600-660 BTU/SCF)	Primary purpose is upgrading heating value of sub-bituminous coal	Process has been demonstrated in a 25 TPD pilot plant			1 Unfavorable product mix 2 Mechanically complex
OCCIDENTAL	Occidental Research and Development Corporation	Lignite Sub-bituminous Bituminous	Hot char recycle	Entrained bed	Atmospheric 1100°F	1150 LB/ton char 1 0 1 5 BBL/ton liquid 3000 SCF/ton gas (700 BTU/SCF)	Short residence time, rapid heat up rate of feed, has highest liquid yields of pyrolysis processes	3 8 TPD pilot plant in operation	Technique to desulfurize char Design of 250 T/D pilot plant underway	1 Relative high liquid yields 2 Straight forward processing scheme	1 High sulfur char
CLEAN-COKE	U S Steel Corporation	High volatile Bituminous	Hot gas recycle	luid bed	PYROLYSIS 90 100 psig 1200 1400°F HYDROTREATING 3000-4000 psig 400°F	700 LB/ton coke pellets < 1 0 BBL/ton oil 1 MM BTU fuel gas/ton	Developed primarily for upgrading high sulfur caking coals to low sulfur metallurgical grade coke	600 LB/D carbonizer and hydrogenator in operation 400 LB/D coke pelletizer in operation	Design a 250 T/D demonstration plant		1 High pressure slurry feed system 2 Integrated operations have not been done

TABLE A-2′ (continued)

COAL LMMJEFACTION – **HYDROGENATION** PROCESSES

NAME	DEVELOPER	FEEDSTOCKS	REACTOR SYSTEM	CONVERSION CONDITIONS	TYPICAL PRODUCTS YIELDS	HYDROGEN CONSUMPTION	REMARKS	PILOT PLANT	FUTURE PLANS FOR PROCESS	PROCESS ADVANTAGES	PROCESS DISADVANTAGES
CSF	Conoco Coal Development Company	Lignite Subbituminous Bituminous	Stirred slurry extractor plus ebullated bed catalytic hydrogenation	EXTRACTOR 850 psig, 765°F HYDROTREATER 3000 psig, 800°F	2 0 BBL/ton oil 1400 SCF/ton gas (833 BTU/SCF)	7500 SCF/Ton 15 000 SCF/T hydrotreating	H_2 supplied by donor solvent in extractor which is continuously recovered and rehydrogenated for recycle to extractor	20 TPD pilot plant in start up at Cresap, West Virginia			1. Pressurized slurry feed system 2 Mechanical extraction under pressure 3. Hydrotreating of extract required
EDS	Exxon Research and Engineering Company	Lignite Subbituminous Bituminous	Proprietary Extractor Fixed bed catalytic solvent hydrogenation	1800 2600 psig 700° 800°F	~3 0 BBL/ton low sulfur fuel oil	6000 8000 Gasification of insoluble coal and reforming of product gas to supply H	Follows CSF scheme, where donor solvent is continuously recovered and rehydrogenated for recycle to the extractor	1 TPD Wilsonville plant in operation	Design and construction of 250 TPD pilot plant	1. Different product slate can be obtained by varying operating conditions	1 High pressure slurry feed system
SRC	Gulf Oil Corporation	Lignite Subbituminous Bituminous	M. Hydrovertical tube dissolver	1000 psig 818°F	1100 LB/ton low sulfur, low ash char (16 000 BTU/LB) 9 1% ash	3000-6000 SCF/ton	Gaseous hydrogen used in dissolver for hydrotreating	50 TDP plant operating at Ft. Lewis, Wash 6 TPD pilot plant at Wilsonville, Alabama	Design of two 6000 tpd demonstration plants One using SRC I the other SRC II	1 High conversion rates 2 No physical solids preparation required	1. High pressure slurry feed system
H-COAL	Hydrocarbon Research, Inc.	Lignite Subbituminous Bituminous	Ebullated bed Catalyst	2200 2700 psig 800° 870°F	~3 0 BBL/ton synthetic crude 15° API 20% fuel gas	13,000-18,000 SCF/T	Lower H_2 consumption yields low sulfur fuel oil Higher H_2 figure yields the 15° API syncrude	Successfully tested in 3 TPD plant	Construction of 600 T/D demonstration plant underway	1. Based on commercialized H Oil process for heavy residues 2. Continuous regenerative catalyst produces constant activity 3. Low hydrogen consumption	1. High pressure slurry feed system
SYNTHOIL	U S Bureau of Mines	Lignite Subbituminous Bituminous	Fixed bed Catalyst	2000 4000 psig 800°F	~3 0 BBL/ton 200 LB/ton char (17 000 BTU/LB) 3000 SCF/T fuel gas	4000 + SCF/T Suggest using a gasification scheme, but none specified or tested	The apparent very short residence time required was attractive H scale up more practical Later tests showed it was not	1/2 TPD pilot plant no longer in operation	Construction completed in 18 TPD pilot plant never utilized	1 High liquid yields 2 Can handle moderately heavy slurries 3 Low hydrogen requirement	1 High pressure slurry feed system 2 Solid residue contains high amounts of unconverted coal 3 High hydrogen recycle rates 4. Late work showed reaction rates to be low
CCL	Gulf Oil Corporation	Lignite Subbituminous Bituminous	Fixed bed Catalyst	2000+ psig 750° 1000°F	~3 0 BBL/ton low sulfur fuel oil	16 000 22 000 SCF/ton Indicate reforming of product gas for H_2	Short residence time Special reactor design Coke resistant, high activity catalyst	1 TPD pilot unit in operation	The 600 TPD pilot plant is currently in design	1 Catalyst exhibits high resistance to carbon deposition 2 High liquid yields	1 High pressure slurry feed system

e.b&a

TABLE A-3

SUMMARY OF RETORTING PROCESSES

	GAS COMBUSTION	URGI RUHRGAS	'ARAHO KILN	ARAHO KILN (ALT.)	'ETROSIX	SUPERIOR'S GRATE RETORT	OSCO	UNION RETORT "A"	UNION RETORT "B"	UNION SGR	OCCIDENTAL IN SITU
VELOPER	reau of Mines	urgi Ruhrgas	'araho Dev. Corp	araho Dev. Corp	'etrobras, Cameron & ones	uperior Oil Company	he Oil Shale Corp.	Union Oil Co. of Calif	Union Oil Co. of Calif.	Union Oil Co. of Calif.	Occidental Petroleum C
HETORTING (ANSFER)	ternal combustion of ent shale carbon idue.	lot circulating solid Ash) No internal ombustion	nternal combustion of pent shale carbon esidue.	ot recycle gas. No ombustion in retort	Hot recycle gas. No ombustion in retort.	Either direct (with partial ombustion of recycle as) or indirect.	lot circulating ceramic alls. No internal ombustion.	nternal combustion of pent shale carbon esidue.	Hot recycle gas. No combustion in retort.	Hot recycle gas, with steam and hot gas from coke gasifier.	Internal combustion of spent shale carbon residue plus recycle gas.
Date Operated	160-1, 1952-6, 1964-6	1960s, 1976	imestone (Comm.) 1969 to date 1974 to date	976	1972–To date.	1975 to date.	955-7, 1965-6, 971-2	1948, 1956-6		1973-74	1972 to date.
ITS Tons Per Day	25,150	16	100		2000	20 TPH Maximum capacity – operated @ about 16 TPH	14,1000	2,30,380 to 1200	Laboratory only.	3	Not readily available (in situ)
AT OPERATION	or gas – solids intacting resulting clinker formation. ould not operate with grade shale (over 30 gal/ton).		Program for oil shale pilot plant operation completed. Executing contract to produce 100,000 Bbl of oil for refining tests	ilot plant operates same Petrosix operation ing U.S. shale at 30-35 al/ton.	Operating with Brazil oil shale (23 gal/ton). Have had some refluxing of shale oil which forms tarry substance and plugs bed.	Circular traveling grate, adapted from iron ore sintering. Operated by Superior at McDowell-Wellman facilities – Cleveland Ohio.	Pilot plant operation ucoassful. Full scale lant (50,000 B/D) n preliminary engineering stage.	Utilizes rock pump. Process appears workable if commercial-sized equipment can be developed.	Utilizes rock pump. Process appears workable if commercial-sized equipment can be developed.	Utilizes rock pump and separate coke gasifier	First large scale unit (1976) produced 30,000 bbl, but had low yields due to poor rubblization. Second gave very poor yields due to unexplained channeling. Third is under way.
E REQUIRED	1/4" to 3"	Less than 1/2"	1/4" to 3"	1/4" to 3"	1/4" to 3"	~3"	Less than 1/2"	1/8" to 3"	1/8" to 3"	1/8" to r	Not reported
°API	9.6		21.4	11.7	19.8		21	21	21	21.5	26.6
Sulfur, Wt. %	80		0.81		1.06		0.8	0.7		0.7	0.66
Nitrogen, Wt.	18		1.95		094		1.8	1.8		1.8	1.50
Pour Point, °	80		85	85	25	80	80	80	m	70	25
SHALE OIL YIELD OF FISCHER ASSAY	2 – 87		94-98	97	80 – 90 (Est.)	95 – 100		91		100	Much depends on degree of rubblization.
	Retorting is similar to araho approach. Development work needed in solid distribution and air gas distribution system	Commercial plant of 1700 T/D in operation using predried brown coal. Han 100 T of Colorado shale in late 1976, for 2 week pilot test. Data not available but reportedly ran very smoothly	Retort has worked well in demonstration plant built at B. of M. Anvil Points facilities. Have made and stored 80,000 bbl of the 100,000 bbl to be refined for U.S. Navy	An alternate scheme demonstrated at Anvil Points plant.	Process should work using low grade shale – < 30 gal/ton. Additional development work needed to utilize high grade shale.	Claims to have eliminate most environmental objections. Recovers nahcolite, soda ash, and alumina as salable by-products. Reduced volume of residue permits returning all solid waste to mine.	Mechanical and technical problems seem to be resolved. Process appears to be one of most efficient to date. Tosco claims it is fully developed on demo scale and is ready for commercial application. Final EIS has been issued by BLM.	Union believe technology established for design of 5000T/D retort. They are proceeding with plans for privately financed full-scale module.	Retort "B" could be operated in combination w/Retort "A" to yield 92 Vol % to Fischer Assay.	High (82%) thermal efficiency. Proceeding with 1500 T/D demo retort and 5000 T/D prototype solids pump	Modified in situ, with 15 or 20% of deposit removed, followed by explosive fracturing to produce retortable rubble. Could be economical even for lean shales (10 gal/T).

APPENDIX TO CHAPTER 5, B

Appendix B-1: EXISTING U.S. AND FOREIGN LOW- AND MEDIUM-BTU GASIFICATION SYSTEMS

(Courtesy: "Low and Medium Btu Gasification Systems: Technology Overview" U.S. EPA, 1978; EPA-600/7/78-061)

Gasifier	Licensor/developer	Number of gasifiers currently operating (No. of gasifiers built) Low-Btu gas	Medium-Btu gas	Synthesis gas	Location	Scale
Lurgi	Lurgi Mineralöltechnik GmbH	5	(39)	(22)	Foreign	Commercial
Wellman-Galusha	McDowell Wellman Engineering Co.	8(150)			US/Foreign	Commercial
Woodall-Duckman/ Gas Integrale	Woodall-Duckham (USA) Ltd.	(72)@@		(8)**	Foreign	Commercial
Koppers-Totzek	Koppers Company, Inc.			(39)**	Foreign	Commercial
Winkler	Davy Powergas		(23)**	6(14)	Foreign	commercial
Chapman (Wilputte)	Wilputte Corp.	2(12)	-	-	US	Commercial
Riley Morgan	Riley Stoker Corp.	1	-	-	US	commercial
Wellman Incadenscent	Applied Technology Corp.	(2*)**	-	-	US/Foreign	Commercial/ Demonstration
BGC/Lurgi Slagging	British Gae Corp. and Lurgi Mineralöltechnik GebH		1		Foreign	Demonstration
Bi-Gas	Bituminous Coal Research, Inc.		1		US	Demonstration
Foster Wheeler/Stoic	Foster Wheeler/Stoic Corp	1*(2)**	-	-	US	Demonstration
Pressurized Wellman-Galusha (MERC)	ERDA	1*			US	Demonstration
GFERC Slagging	ERDA	-	1*		US	Demonstration
Texaco	Texaco Development Corp.	-		1*	US	Demonstration
BCR Low-Btu	Bituminous Coal Research, Inc.	1*			US	Demonstration
combustion Engineering	Combustion Engineering Corp.	1*			US	Demonstration
Hygas	Institute of Gae Technology	-	1		US	Demonstration (High-Btu)
Synthane	ERDA	-	1		US	Demonstration (High-Btu)
$C0_2$ Acceptor	ERDA	-	1		US	Demonstration (High-Btu)
Foster Wheeler	Foster Wheeler Energy Corp.	1			US	Pilot
Babcock & Wilcox	The Babcock & Wilcox Co,	1			US	Pilot
U-Gas	Institute of Gas Technology, Phillips Petroleum Corp.	1			US	Pilot (400 lb/hr coal)
Westinghouse	Westinghouse Electric Corp.	1			US	Pilot
Coalex	Inex Resources, Inc.	1 (1*)			US	Pilot

* Under construction.
Demonstration scale indicates 2000 to 10,000 lb/hr coal feed.
Pilot scale indicates 400 to 1500 lb/hr coal feed.

** Undetermined number overseas currently in operation.

e b m a t-l.

Appendix B-2: Continued

POPULATION OF LOW/MEDIUM-BTU GASIFIERS

Gasifier type / Gasifier name	Licensor/Developer	Stacus
Fixed-Sod, Dry Ash		
Lurgi	American Lurgi Corp. (USA)	Present commercial operation
Wellman-Galusha	McDowell Wellman Engr. Co. (USA)	Present commercial operation
Chapman (Willputte)	Wilputte Corp. (USA)	Present commercial operation
Woodall-Duckhan/Gas Integrale	Woodall-Duckham, Ltd. (USA)	Present commercial operation
Riley Morgan	Riley Stoker Corp. (USA)	Present demonstration unit testing; commercially available
Pressurized Wellman-Galusha (MERC)	Morgantown Energy Research Center/ERDA (USA)	Present development unit testing
Foster Wheeler/Stoic	Foster Wheeler Energy Corp. (USA)	Demonstration unit planned
Kilngas	Allis Chalmers Corp. (USA)	Present development unit testing ; commercially ● vallabla
Kellogg Fixed Bad	M. u. Kellogg Go. (USA)	Present I18v'dome unit testing
GEGAS	General Electric Research and Development (USA)	Present development unit testing
Counol Fixed Bed	Consolidation Coal co. (USA)	Present development unit testing
IFE Two Stage	International Furnace Equipment Co., Ltd.	Past commercial operation
Kerpely Producer	Bureau of Mines/ERDA (USA)	Past commercial operation
Marischka	Unknown	Past commercial operation; anthracite or coke only
Pintsch Hillebrand	Unknown (Germany)	Past commercial operation
U.G.I. Blue Water Gas	U.G. I .Corp. /DuPont (USA)	Past commercial operation; coke only
Power Gas	Power Gas Co. (USA)	Past commercial operation
Wellman Incandescent	Applied Technology (uDA)	Present commercial operation
BCR/Kaiser	Unknown	Past development unit testing
Fixed-Bed. Slagging Ash		
BGC/Lurgi Slagging Gasifier	British Gas Council (GB) Lurgi Mineralöltechnik (W. Germany)	Present development unit testing
GFERC Slagging Gasifier	Grand Forks Energy Research Career/ERM (USA)	Present development unit testing; lignite only
Luena	Unknown	Put Commercial operation; coke only
Thyssen Galocsy	Unknown	Past commercial operation; coke only

ejb&a

POPULATION OF LOW/MEDIUM-BTU GASIFIERS

Gasifier name	Licenser/Developer	Status
Gasifier type		
Fluidized-Bed, Dry Ash		
Winkler	Davy Powergas *Co. (USA)*	Present commercial operation
Hygas	Institute *of* Gas Technology (USA)	Present development unit testing
Synthane	Pittsburgh Energy Research Center/ERDA (USA)	Present development unit testing
Hydrane	Pittsburgh Energy Research Center/ERDA (USA)	Present development unit testing
Cogas	Cogas Development Co. (USA)	Present development unit testing
Exxon	Exxon Corp. (USA)	Present development unit testing
BCR Low-Btu	Bituminous Coal Research (USA)	Present development unit testing
CO_2 Acceptor	Consolidation Coal co. (USA)	Present development unit testing
Electrofluidic Gasification	Iowa State Univ./ERDA (USA)	Present development unit testing
LR Fluid Bed	Unknown (Germany)	Past commercial operation
HRI Fluidized Bed	Hydrocarbon Research Inc. (USA)	Past development unit testing
BASF-Flesch-Demag	Badische Anilin und Soda Fabrik (West Germany)	Past development unit testing
GEGB Marchwood	Unknown	Past development unit testing
Heller	Unknown (Germany)	Put development unit testing
Fluidized-Bed, Agglomerating Ash		
U-Gas	Institute of Gas Technology (USA)	Present development unit resting
Bactmlle/Carbide	Battelle Memorial Institute *(USA)*	Present development unit testing
Westinghouse	Westinghouse Electric Corp. (USA)	Present development unit testing
City College *of* NY *Mark 1*	Hydrocarbon Research Inc./ A.M. Squires (USA)	Present development unit testing
Two-stage Fluidized	British *Gas* Council (England)	Present development unit testing
ICI Moving Burden	Imperial Chemical Industries, Ltd. (England)	Past development unit testing
Entrained-Bed, Dry Ash		
Garrett Flash Pyrolysis	Garrett Research and Development co. (USA)	Present development unit testing
Bianchi	Unknown (France)	Past development unit testing; lignite only

POPULATION OF LOW/MEDIUM-BTU GASIFIERS

Gasifier name	Licenser/Developer	Status
Gasifier type		
Paninduo	Unknown *(France)*	Past development unit testing; lignite only
USBM Annular Retort	Bureau of Mines/ERDA (USA)	Past development unit testing; lignite only
USBM Electrically Heated	Bureau of Mines/ERDA (USA)	Past development unit testing
Entrained-Bed, Slagging Ash		
Koppers-Totzek	Koppers Co. (USA)	Present commercial operation
Bi-Gas	Bituminous Coal Research, Inc. (USA)	Present development unit testing
Texaco	Texaco Development Corp. (USA)	Present development unit eating
Coalex	Inex Resources, Inc. (USA)	Present development unit testing; commercially ● milabla
PAMCO/Foster Wheeler	Pittsburgh ● od Midway Coal Co. / Foster Wheeler (USA)	Present development unit testing
Combustion Engineering	Combustion Engineering (USA)	Present development unit testing
Brigham Young University	Brigham Young University/ Bituminous Coal Research (USA)	Present development unit testing
Babcock and Wilcox	The Babcock and Wilcox CO. (USA)	Past commercial operation
Ruhrgas Vortex	Ruhrgas A. G. (West Germany)	Past commercial operation
IGT Cyclonizer	Institute of Gas Technology (USA)	Pastdevelopment unit testing
Inland Steel	Inland Steel CO. (USA)	Past dcvdopment unit testing
USBM, Morgantown	Morgantown Energy Research Center/ERDA (USA)	Past development unit testing
Great Northern Railway	Great Northern Railway Co. (USA)	Past development unit testing
FRS Cyclone	Unknown (England)	Past development unit testing
Molten Media, Slagging Ash		
Kellogg Molten Salt	M. W. Kellogg CO. (USA)	Present development unit testing
Atgas/Patgas	Applied Technology Corp. (USA)	Present development unit testing
Rockgas	Atomics International (USA)	Present development unit testing
Rummel Single Shaft	Union Rheinische Braun Kohlen Kraftstoff A. G. (West Germany)	Past commercial operation
Sun Gasification	Suo Research and Development Co. (USA)	Past development unit testing
Otto-Rummel Double Shaft	Dr. C. Otto and Co.	Past development unittesting

ej b&a

APPENDIX TO CHAPTER 5, C

COOPERATIVE AGREEMENTS AND FEASIBILITY STUDY GRANTS FOR SYNFUELS

(Source: U.S. DOE 7/80)

COOPERATIVE AGREEMENTS

TECHNOLOGY	REQUESTED FROM DOE	DESCRIPTION/SITE
Coal Liquids		
Texas Eastern Synfuels	$24,300.00	Texas Eastern Synfuels proposes to construct a coal liquefaction facility which will produce the equivalent of 56,000 barrels of oil per day. Texas Eastern Synfuels is a joint venture of Texas Eastern Corporation, and Texas Gas Transmission Corporation. Proposed project is a Fischer Tropsch plant--like the SASOL facility in South Africa--that would convert approximately 28,000 tons per day of coal into a mixture of transportation fuels, Synthetic Natural Gas (SNG), and chemicals. Approximately 44 percent of the output is SNG (145 mmSCF/D); about 30 percent transportation fuel, and the test chemicals Site is near Hendersen, Kentucky.
High Btu Gas		
Great Plains Gasification Associates	$22,000,000	The project will employ a Lurgi pressurized, fixed bed gasification process with Lurgi methanization requiring 14,000 tons/day of lignite coal to produce 137.5 mmCF/day of synthetic gas, 98 tons of ammonia/day and 85 tons/day of sulfur. The facility will be sited in the Beulah Hazen area of Mercer County, North Dakota and has a total capital requirement of $1.5 billion

Wycoal Gas	$13,155,000	Wycoal plans to construct a facility using Lurgi and Texaco gasification units to process 16,000 tons of sub-bituminous coal daily to produce high Btu gas. All liquid by-products will also be gasified. The facility is to be located in Douglas, Wyoming. The Statement of work **proposed** will involve developing a definitive basis for plant design estimating costs, securing permits and approvals, obtaining financing and identifying long-lead delivery items. There is a market for the SNG via a pipeline system to the midwest owned by the participants. The project would produce the equivalent of 51,000 barrels of oil per day.

FEASIBILITY STUDY GRANTS

TECHNOLOGY	REQUESTED FROM DOE	DESCRIPTION/SITE
Coal Liquids		
Cook Inlet Region Anchorage, Alaska 99509	**$3,900,000**	Feasibility study of producing 54,000 barrels per day of methanol from low sulfur coal using Winkler gasifier and ICI methanol synthesis. Site: West side of Cook Inlet, Alaska
W. R. Grace Denver, Colorado 80223	$786,477	'Stage 111 of a feasibility study of a coal sourced methanol plant using a Koppers/Totzek Gasifier. Site: Moffat County, NW Colorado
Clark Oil & Refining Milwaukee, Wisconsin 53227	$4,000,000	Feasibility study of producing synthesis gas from coal, steam, oxygen & methanol from synthesis gas using a KT Gasifier, ICI & the Mobil M Process. Site: S. Illinois

ejb&a

Houston Natura Gas/Texaco Houston, Texas 77001	$3,260,000	Fourteen month feasibility study of producing fuel grade methanol from coal using Ziegler coal deposits. Site: Covent, Louisiana
AMAX, Inc. Grenwich, Connecticut	$2,190,000	Feasibility study of a coal to methanol plant producing 14,910 barrels per day using Koppers or Lurgi Gasifiers. Site: Diluth, Minnesota
Dakota Company B smark, North Dakota 58501	$4,000,000	Feasibility study for constructing an 85,000 barrel/day coal to methanol plant using Lurgi gasifier and Lurgi methanol synthesis. Site: Dunn, North Dakota
Republic of Texas Coal Co. and Mitchell Energy Corp. Houston, Texas 77002	$808,781	Feasibility study of gasification, in-situ deep Texas lignite and conversion of remaining medium BTU synthesis gas to methanol and high octane gasoline. Site: Somewhere in Texas Gulf Coast
Hampshire Energy Milwaukee, Wisconsin	$4,000,000	Ten-month feasibility study of converting 15,000 tons of coal/day to 20,000 barrels/day of gasoline * Site: Gillette, Wyoming

High Btu Gas

Crow Tribe of Indians Washington, D.C. 20036	$2,729,393	Nine month feasibility study, High Btu Gas (Lurgi Process - SNG) at Crow Reservation, MT. Site: East of Billings, MT.
Texas Eastern Synfuels, Inc. Houston, Texas 77001	$3,018,000	Nine month feasibility study, High Btu Gas (Lurgi Process - SNG, Methanol) at San Juan County, New Mexico. Site: East of Navajo Indian Reservation

Low/Medium Btu Gas

Florida Power St.Petersburg, Florida 33733	$1,380,796	Twelve month feasibility study of Medium Btu Gas Combined cycle. Site: Pinellas Courty, Florida
General Refractories Bala Cynwyd, PA. 19004	$922,555	Nine month feasibility study of low Btu Industrial Fuel Gas. Site: Florence, Kentucky
Central Maine Power Augusta, Maine 04336	$3,624,558	Fifteen month feasibility study of combined cycle, medium Btu gas at Sears Island, ME. (Process: Texaco Gasifier) Site: Waldo County, Maine
EG&G Wesley, Massachusetts 02181	$4,000,000	Feasibility study for a medium Btu gasification facility producing combined cycle power and methanol. Choice or process technologies between Koppers-Totzek or Slagging Lurgi. Site: Fall River, Massachusetts
Philadelphia Gas Works Philadelphia, PA 19102	$1,168,108	Twelve month feasibility study of medium Btu gas (Process: TRD). Site: Philadelphia, Pernsylvania
Celanese Corp Dallas, Texas 75247	No cost	Feasibility study to determine the technical and economic viability of developing a carbon monoxide and hydrogen syngas from either a high Btu coal or a Texas lignite. Site: Near Bishop, Texas
Union Carbide/Linde Division Tonawanda, New York 14150	$3,945,676	Eighteen-month feasibility study of low/Medium Btu Gas. Site: Texas City, Houston, Texas

Oil Shale

Gary Energy Corp. Fruita, Colorado 81521	$3,009,399	Feasibility study for upgrading crude oil shale to gasoline jet fuels, DFO and residual using UOP hydro-processing & hydro-cracking. Site: Fruita, Colorado
Transco Energy Co. Houston, Texas	$3,778,267	Eighteen month feasibility of 2000 BPD (or larger) module of a 50,000 BPD plant. Site: Lewis County, Kentucky

Tar Sands

Natomas Energy Co. San Francisco, California 94108	$357,511	Eight-month feasibility study of extracting 20,000 barrels/day of oil from domestic tar sands - Bitumen. Site: Site may be in Utah or California
Standard Oil of Indiana Chicago, Illinois 60601	$0	Feasibility study of a 5000 barrel/day Tar Sands Bitumen facility. Site: Sunnyside, Utah

Unconventional Gas

Acruex Corporation Mt. View, California 94-42	$440,261	Feasibility study of anaerobic digestion of sewer water to obtain methane. Site: Possibly Oakland, California
Seneca Indian Nation Salamarca, New York 14779	$896,638	Feasibility study of the recovery of natural gas from Devonian Shales - vertical wells. Methane from Devonian Shale. Site: Salamanca, New York

Republic of Texas Coal Co. and Mitchell Energy Corp. Houston, Texas 77002		Feasibility study of gasification, in-situ deep Texas lignite and conversion of remaining medium Btu synthesis gas to methanol and high octane gasoline. Site: Calvert, Robertson County, Texas
Mountain Fuel Supply Co. Salt Lake City, Utah 84139	$1,810,762	Two-year feasibility study of unconventional natural gas in the Pinedale field. Product is natural gas and condensate. Site: Sublette County, Wyoming
Peat		
Minnesota Gas Co. Minneapolis, Minnesota 55402	$3,996,554	Nineteen month feasibility study for the production of high Btu substitute natural gas from peat. Site: Minnesota
Shale Liquid Upgrading		
Union Oil Energy Mining Los Angeles, CA 90017	$4,000,000	Feasibility study for operation of a 10,000 BPD upgrading plant producing premium quality syncrude. Site: Grand Valley, Colorado

e:b&a

COOPERATIVE AGREEMENTS

TECHNOLOGY	REQUEST C FROM DOE	DESCR PT ON/SITE
Unconven ional Gas		
U.S. Steel Corporation	$600,000	U.S. Steel Corporation proposes to build a collection and compression system to capture methane from a mine pre-drainage program. The gas, currently being vented, will be injected into an interstate pipel ne system for sale. The project will produce the equ valent of 200 barrels of oil per day. Site s Oak Grove, Alabama.
Coal Oil Mixture		
Bankl ck Corporatio	$989,500	Banklick Corporation proposes to design and construct a Coal Mining Mixture (COM) preparation plant on a site on Blount Island, Florida owned by the Jacksonville Port Authority and to market the products. In this proposal, the approach is to first grind the coal, then mix it with oil and pulverize the result, and, finally, to mix the product more thoroughly using ultrasonic agitators. A COM prep plant is relativley simple and, in addition to the above equipment, cons sts of coal storage and handling equipment (including a coal pile), oil and COM piping and storage hardware, and associated hardware. Coal would be delivered by rail. The project will produce 6,000 barrels per day.

GLOSSARY (Courtesy: Coal Liquefaction Quarterly Report, U.S. DoE, May 1979)

absorptio an imprecise term suggesting the taking up of one substance by another by either a physical process or a chemical combination.

acceptor — calcined carbonate that absorbs carbon dioxide evolved during gasification. liberating heat.

acid gas removal — the process of selectively removing hydrogen sulfide and carbon dioxide from a gas stream.

activated carbon — carbon obtained by carbonization in the absence of air, preferably in a vacuum; has the property of absorbing large quantities of gases. solvent vapors; used also for clarifying liquids.

diabatic — any process where heat is neither given off nor absorbed.

dsorption — the process by which the surface of a solid or liquid attracts and holds any atom. molecule. or ion from a solution or gas with which it is in contact.

gglomerate — assemblage of ash particles rigidly joined together. as by partial fusion (sintering).

nttmcits coal — hard coal containing 86 to 98 percent fixed car- " bon and small percentages of volatile material and ash.

API — American Petroleum institute.

API gravity— a scale adopted by the API for measuring the density - of oils; $^{\circ}API = \frac{141.5}{\text{Specific gravity. } 60^{\circ}F/60^{\circ}F} - 131.5$

romatic hydrocarbon — a cyclic hydrocarbon containing one or more six-carbon (benzene) rings.

sh — solid residue remaining after the combustion of coal.

ASTM — American Society for Testing Materials.

autoclave – a vessel, constructed of thick-walled steel for carrying out chemical reactions under high pressures and temperatures.

bench-scale. unit — a small-scale laboratory unit for testing process concepts and operating parameters as a first step in the evaluation of a process.

. binder — carbon products. tars. etc.. used to impart cohesion to the body to be formed: a coai-extract binder may be used to prepare formed-coke pellets from non-coking coals.

bituminous coal — a broad class of coals containing 46 to 86 percent fixed carbon and 20 to 40 percent volatile matter.

blow down— periodic or continuous removal of water from a boiler to prevent accumulation of solids.

bottoming cycle~ — the lower temperature thermodynamic power cycle of a combined-cycle system.

Btu — British thermal unit. the quantity of energy required to raise the temperature of one pound of water one degree Fahrenheit.

BTX— benzene. toluene. xylene; aromaticc hydrocarbons.

caking — the softening and agglomerartion of coal as a result of the application of heat.

calcination — the process of heating a solid to a high temperature to cause the decomposition of hydrates and carbonates.

calorific value— the quantity of heat obtaincd by the complete combustion of a unit mass of a fuel under prescribed conditions.

carbon fiber – fine filaments of carbon about eight microns in diameter which are used in composite materials. being bound with resins.

carbonization — destructive heating of carbonaceous substances wit h the production of a solid. porous residue or coke. and the evolution of a number of volatile products. For coal. There are two principal classes of carbonization. high-temperature coking (about 900" C) and low-temperature carbonation (about 700° C).

catalyst — a substance that accelerates the rate of a chemical reaction without itself undergoing a permanent chemical change.

centrifuge — an apparatus rotating at high speed which utilizes the centrifugal force generated to separate materials of different densities. e.g.. undissolved residue from coal solution in the SRC process.

char — the solid residue remaining alter the removal of moisture and volatile matter from coal.

Claus process— industrial method of obtaining elemental sulfur through the partial oxidation of gaseous hydrogen sulfide in air followed by catalytic conversion to molten sulfur.

coal — a readily combustible rock containing more than 50 weight percent and more than 70 volume percent of carbonaceous material including inherent moisture. formed from compaction and induration of variously altered plant remains similar to those in peat.

coalification — metamorphosis of vegetable debris into coal.

coke — strong porous residue cons] sting of carbon and mineral ash formed when bituminous coal is heated in a limited air supply or in the absence of air. Coke may, also be formed by thermal decomposition of petroleum residues.

coke breeze — the fine screenings from crushed co kc usually passing a 1 2 inch or 3 *4* inch screen opening.

combined cycle — two sequentai thermodynamic power conversion systems operating at different temperatures.

combustion gas — gas formed by the combustion of coal. e.g.. burning.

combustor — a vessel in which combustion taken place

coupon — a polished metal strip used to measure the rate 01 corrosion of the metal in a specific gaseous or liquid environment.

cracking — the partial decomposition of h l~h-m~)lecuiar-weight organic compounds into lower-molecular-weight compounds. generally as a result of high temperatures

crude *gas* — impure gas produced in a gasifier

culm — the waste or slack from anthracite mines or preparation plans consisting of fine coal, coal dust. and dirt.

cyclone separator – essentially a settling chamber to separate solid panicles from a gas. in which gravitational acceleration is replaced by centrifugal acceleration.

degasification — a process for removing nat urally occurring methane from coal seams.

delayed cokinq — a process wherein coal is subjected to a long period of carbonization at moderate temperatures to form coke.

demineralization –- removal of mineral matter (ash) from coal by solvent extraction. usually under hydrogen atmosphere.

depolymerization — the change of a large molecule into simpler molecules usually accompanied by the substitution of hydrogen for oxygen in the molecular structure.

destructive distillation — the distillation of coal accompanied by Its thermal decomposition.

desulfurization — the removal of sulfur from hydrocarbonaceous substances by chemical reactions.

devolatization — the removal of a portortion of the volatile matter from medium- and high-voiatile coals.

diatomaceous earth — a yellow. white. or light-gray, siliceous porous deposit made up of opaline shells of diatoms: used as a filter aid. paint filler, adsorbent. abrasive. and thermal insulator. Also known as kieselguhr.

diatomite — See Diatomaceous Earth.

dissolution — the taking up of a substance by a liquid with the formation of a homogeneous solution.

distillation — a process of vaporizing a liquid and condensing the vapor by cooling: used for separating liquids into various fractions according to their boiling points or boiling ranges.

dotomite~ — a carbonate of calcium and magnesium having the chemical formula $CaMg(CO_3)_2$

Dowtherm — trademark for a series of eutectic mixtures of diphenyl oxide and dlphenyl used as high-temperature heat-transfer fluids.

● bullated bed — gas containing a relatively small proportion of suspended solids. bubbles through a higher density fluidized phase with the result that the system takes on the appearance of a boiling liquid.

economizer — beat exchanging mechanism for recovering heat from flue gases.

effluent gas — gas given off from a process vessel.

etutriation — the preferential removal of the small constituents of a mixture of solid particles by a stream of high-velocity gas.

● ndoth_mic reactton — a process in which heat is absorbed.

● rtthdpy change — the increase or decrease in heat content of a substance or system which accompanies its change from one state to another under constant pressure.

● ntrmncd bed (flow) — a bed in which solid particles are suspended in a moving fluid and are continuously carried over in the effluent stream.

eutectic -that combination of two or more components which produces the lowest melting temperature.

● xotttermte reaction — a process in which heat is liberated.

extraction — a method of separation in which a solid or solution is contacted with a liquid solvent (the two being essentially mutually Insoluble) to transfer components into the solvent.

● xtractlve coking — similar to delayed coking process. with the emphasis on high tar yieids to produce liquids.

filter aid — finely divided solids used to increase efficiency of filtering.

filter cake -- the moist residue remaining from the filtration of a slurry to produce a clean filtrate.

filtrate — a liquid free of solid matter after having passed through a filter.

filtration — the separation of solids from liquids by passing the mixture through a suitable medium. e.g.. cloth, paper. diatonaccous earth.

Fischer assay — method for determining the tar and light oil yields from coal or oil shale: conducted in a retort under an inert atmosphere with a presribed increase in temperature to 500°C.

Fischer-Tropsch catatyst — catalysts developed for the catalytic synthesis of liquid fuels from coal-derived svnthesis gas; catalysts contain principay iron. cobalt. nickel. or ruthenium.

Fischer-Tropsch process — method of hydrogenating mlxtures of carbon monoxide and hydrogen produced from coal. lignite. or natural gas by means of steam. at 1-10 atmospheres and 360-410°F to yield liquid and gaseous fuels. and a wide spectrum of industrial chemicals.

fixed-bed -- stationary solid particles in intimate contact with fluid passing through them.

fixed carbon — the solid residue. other than ash. obtained by destructive distillation; determined by definite prescribed methods.

flash carbonization — a carbonization process characterized by short residence times of coal in the reactor to optimize tar yields.

ftue gas— gaseous combustion products.

fluidization (dense phase) — the turbulent motion of solid particles in a fluid stream; the particles arc close enough as to interact and give the appearance of a boiling liquid.

fluidization (entrained) — gas-solid contacting process in which a bed of finely divided solid particles is lifted and agitated by a rising stream of gas.

fluidized-bed — assemblage of small solid panicles maintained in balanced suspension against gravity by the upward motion of a gas.

fly ash— a fine ash from the pulverized urned in power station boilers. or entrained ash carried over from a gasifier.

fractionation — distillation process for the separation of the various components of liquid mixtures.

freeboard — the space in a fluidized-bed reactor between the top of the bed and the top of the reactor.

free swelling index — a standard test that indicates the caking characteristics of coal when burned as a fuel.

Friedel-Crafts reaction — a substitution reaction. catalyzed by aluminum chloride in which an alkyl R-) or acyl (RCO-) group replaces a hydrogen atom of an aromatic nucleus to produce a hydrocarbon or a ketone.

fuel cell — a galvanic cell in which the chemical energy of a conventional fuel is utilized to produce electricity.

fuel gas — low heating value (150-350 BTU, scf) product generally utilized on sitc for power generation or industrial use.

gasification of coal — the conversion of solid coal into a gaseous form by various chemical reactions with steam.

gasifier — a vessel in which gasification occurs. usually utilizing fluidized-bed. fixed-bed. or entrained-bed units.

he@ capacity— quantity of heat required to raise the temperature of one pound of a substance one degree Fahrenheit.

high-Btu gas— a gas having a heating value of 900 to 1,000 Btu per standard cubic foot. which approaches the value for natural gas.

higher-heating value (HHV) — th- heat liberated during a combustion process in which the product water vapor is condensed to a liquid and the heat of condensation is recovered.

hydroclone — a small cyclone extractor for removal of suspended solids from a flowing liquid by means of the centrifugal form set up when the liquid is made to flow through a tight conical vortex.

hydrocoking — coking of tars. SRC. etc.. under hydrogenating conditions to form liquid products.

hydrocracking — the combination of cracking and hydrogenation of organic compounds.

hydrogasification — gasification that involves the direct reaction of fuels with hydrogen 10 optimize formation of methane.

hydrogenation — chemical reactions involving the addition of gaseous hydrogen to a substance in the presence of a catalyst under high temperatures and pressures.

hydrogen donor solvent — solvent. such as anthracene oil tetralin (tetrahydronaphthalene), decalin. etc.. which transfers hydro-

gen to coal constituents causing depolymerization and consequent conversion to liquid products of lower boiling range which are then dissolved by the solvent.

hydrotreating — a process to catalytically stabilize petroleum *or* other liquid hydrocarbon products and or remove objectionable elements from products or feedstocks by reacting them with hydrogen.

Ideal gas— any gas whose equation of state is expressed by the ideal gas law, namely PV = nRT where P is the pressure. V is the volume. R is the gas constant. T is the absolute temperature, and n = number of moles.

Ignition temperature— the minimum temperature necessary to initiate self-sustained combustion of a substance.

Industrial gas — see fuel gas.

Inerts— constituents of a coal which decrease its efficiency in usc. e.g.. mineral matter (ash) and moisture in fuel for combustion.

In situ— in its original place. underground gasification of coal scam.

intermediate-Btu synthesis gas product with a higher heating value between 350 and 500 Btu per standard cubic foot.

Ignite— brownish-black coal containing 65-72 percent carbon on a mineral-matter-free basis. with a rank between peat and subbituminous coal.

limestone— sedimentary rock containing 50 percent carbonate (CO_3) of lime or magnesia. Chemical formula (for calcite limestone) is $CaCO_3$

liquefaction— conversion of a solid to a liquid: with coal. this appears to involve the thermal fracture of carbon-carbon and carbon-oxygen bonds, forming free radicals. These radicals abstract hydrogen atoms yielding low molecular weight gaseous and condensed aromatic liquids.

liquefied patroleum gas (LPG)— those hydrocarbons that have a vapor pressure (at 70°F) slightly above atmospheric (such as propane and butane): kept in liquid form under a pressure higher than 1 atm.

lock hopper — a mechanical device that permits the introduction of a solid into an environment of different pressure.

low-Btu gas — a gas having a heating value up to 350 Btu per standard cubic foot.

lower heating value — the heat liberated by a combustion process assuming that none of the water vapor resulting from the process is condensed, so that its latent heat is not available.

MAF— moisure and ash-free; a term that relates to the organic fraction in coal.

mesh — measure of fineness of a screen. e.g.. a MO-mesh sieve has 400 openings per linear inch.

methanation – the production of methane (CH_4) from carbon monoxide or dioxide and hydrogen.

methane a CH_4, a colorless. odorless. and tasteless gas. lighter than air; the chief component of natural gas.

methane — methanol alcohol. CH_3OH.

micron — a unit of length equal to one millionth of a meter: 10^{-6} meter.

moving bed — particlized solids in a process vessel that are circulated (moved) either mechanically or by gravity flow.

natural gas — naturally occurring gas extracted from sedimental structures consisting mainly of methane and having a higher heating value of approximately 1,050 Btu per standard cubic foot.

noncoking coal — a coal that does not form coke under normal coking conditions.

olefinic hydrocarbon — a class of unsaturated hydrocarbons containing one or more double bonds and having the general chemical formula C_nH_{2n}

open cycle — a thermodynamic power cycee in which the working fluid passes through the system only once and is then exhausted to the atmosphere.

peat— an unconsolidated. hydrophilic. yellowish-brown to brownish-black. carbonaceous sediment. formed by accumulation of partially fragmented and decomposed plant remains in swamps and marshes which retains more than 75 percent inherent moisture and less than 12 percent mineral matter in saturated natural deposits.

petrochemicals— those derived from crude oil or natural gas. or their coal-derived substitutes: they include light hydrocarbons such as butylene. ethylene and propylene. the raw materials for the production of plastics by polymerization.

phenols— a group of aromatic compounds having the hydroxyl (OH) group directly attached to the benzene ring.

pilot plant — chemical process plant containing all the processes of a commercial unit, but on a smaller scale. for the purpose of studying the technical and economic feasibility of the process.

pipeline gas— a methane-rich gas that conforms to certain standards and has a higher heating value between 950 and 1.050 Btu per standard cubic foot.

plenum chamber — an enclosed space through which air is forced for slow distribution through ducts.

present — layer of suitable filtering medium. e.g.. diatomaceous earth. laid down on a rotary filter cloth prior to operation.

prilling tower— a tower that produces small solid agglomerates by spraying a liquid solution in the top and blowing air up from the bottom.

process development unit - a system used to study the effects of process variables on performance: sized between a bench-scale unit and a pilot plant.

proximate analysis— analysis of coal based on the percentages 01 moisture, volatile matter. fixed carbon (by difference). and asn. using prescribed methods. Reported on different bases. such as as-received (or as-fired), dry, mIncral-matter-free (mmf), and dry mineral- matter-free (dmmf).

purification — removal of a wide range of impurities present in gases from coal gasification.

pyrolysis — thermal decomposition of organic compounds in the absence of oxygen.

quenching — cooling by immersion in oil. water bath. or water spray.

Raney nickel catalyst — specially prepared nickel catalyst used in the hydrogenation of organic materals and the methanation of synthesis gas to methane.

raw gas— see crude gas.

reactivity — susceptibility to chemical change: for example, in coal liquefaction. the reactivity of the coal for conversion to liquid products is a function of the coal rank. among other things.

reactor — vessel in which coal-conversion reactions take place.

Rectisol process— a process for the purification of coal-gasification gas based on the capability of cold methanol to absorb all gas impurities in a single step: gas naphtha. unsaturated hydrocarbons. sulfur compounds. hydrogen cyanide. and carbon dioxide are removed from the gas stream by the methanol at temperatures below O°C.

reducing gas — a gas which, at high temperatures, lowers the state of oxidation of other chemicals.

reforming processes — a group of proprietary processes in which low-grade or low molecular weight hydrocarbons are catalytically converted to higher grade or higher molecular weight materials: also applies to the endothemic reforming of methane. for the production of hydrogen, by the reaction of methane and steam in the presence of nickel catalysts.

refractory — a material capable of withstanding extremely high temperatures and having a relatively low thermal conductivity}'.

residence time — *time* spent by a typical particle in a particular zone.

saturated **hydrocarbon** — a carbon-hydrogen compound with all carbon bonds filled; that is. there are no double or triple bonds as in olefins and acetylenes.

scrubber — apparatus in which a gas stream is freed of tar. ammonia. and hydrogen sulfide.

seam coal — coal which is intermediate in rank between bituminous coal and anthracite: contains 8 to 22 percent volatile matter and from 9 I to 93 percent carbon.

semi- water gas — a mixture of carbon monoxide. carbon dioxide. hydrogen. and nitrogen. obtained by passing an air-stream mixture through a hot bed of coke. having a higher heating value of about 120 Btu per standard cubic foot.

sensible heat— that heat which results in only the elevation of the temperature of a substance with no phase changes.

shift conversin — process for the production of gas with a desired carbon monoxide content from crude gases derived from coal gasification; carbon monoxide-rich gas is saturated with steam and passed through a Catalytic reactor where the carbon monoxide reacts with steam to produce hydrogen and carbon dioxide. the latter being subsequently removed in a scrubber employing a suitable sorbent.

sintering — the agglomeration of solids at temperatures below their melting point, usually as a consequence of heat and pressure.

slag — molten coal ash composed primarily of silica, alumina iron oxides. and calcium and magnesium oxides.

slurry — a suspension of pulverized solid in a liquid.

solvation — the assocation or combination of molecules of solvent with solute ions or molecules.

solvent — that component of a solution which is present in excess: liquid used to dissolve a substance.

solvent extractIon — selective solution of coal constituents from finely divided coal particles into a suitable solvent after intimate mixing, usually at high temperatures and pressures in the presence of hydrogen, with or without a catalyst. followed by phase separation.

solvent refined coal (SRC) — a coal extract derived by solvent extraction; a brittle. vitreous solid (m.p. 300° F to 400° F) containing about 0.1 percent ash and about 10 percent of the sulfur in the original coal feedstock; calorific value is about 16.000 Btu per pound: may be used as a clean fuel for power generation by combustion: utilized for the production of h:gh-grade metallurgical coke. anode carbon. and activated carbon by coking. or hydrogenated to produce synthetic crude oil.

space Velocity — volume of a gas (measured at standard temperature and pressure) or liquid passing through a given volume of catalyst in a unit time.

spacific gravity — ratio of the weight of any volume of a substance to the weight of an equal volume of water at 4°C.

specific heat — heat capacity of a substance as compared with the heat capacity of an equal weight of water.

standard **cubic fool {SCF)** — the volume of a gas at standard conditions of temperature and pressure. The American Gas Association uses moisture-free gas at 60° F and 30 inches of mercury (i .0037 atm) as Its standard conditions. The pressure standard IS not universal in the gas Industry: 14.7 psia (1 .000 atm) and 14.4 psia (0.980 atm) are also used. The scientific community uses 32° F and ! atm as standard conditions.

stoichometry — the definite proportions in which molecules react chemically to form new molecules.

stripping — the removal of the more volatile components from a liquid mixture of compounds.

subbituminous coal — the rank of coal between bituminous and lignite. classified by ASTM as having a range of heating values between 8.300 and i 1.000 Btu per pound on a moist mineral-matter-free basis.

substitute natural gas (SNG) — a gas produced from coal. oil sands. or oil shale conforming to natural gas standards.

Superficial velocity — the linear velocity of a fluid flowing through a bed of solid particles calculated as though the particles were not present.

superheater – a heat exchanger ,which adds heat to the saturated steam leaving a boiler.

syncrude — synthetic crude oil: oil produced by the hydrogenation of coal.. coal extracts. oil sands. or oil shale. which is similar to petroleum crude.

synthesia gas — a mixture of hydrogen and carbon monoxide which can be reacted to yield a hydrocarbon.

tail gas — a gas issuing from a gas-treatment unit which may be recycled to the process or exhausted.

tar (coal) — a dark brown or black. viscous, combustible liquid formed by the destructive distillation of coai.

therm — a unit of heat used as a basis for the sale of natural gas; equal to 100.000 Btu.

topping cycle — the higher temperature thermodynamic power cycle of a combined-cycle system.

turndown ratio- the minimum ratio of actual flow rate to design flowrate at which a process unit can be operated.

ultimate analysis — the determination by prescribed method of carbon and hydrogcn in the material as found in the gaseous products of its complete combustion. the determination of sulfur. nitrogen. and ash in the material as a whole and the estimation of oxygen by difference: may be reported on different bases. such as as-received (or as-fired). dry.. mineral-matter-free (mmf). and dry mlnerai-matter-free (dmmf).

Venturi **scrubber**— a gas cleaning device which involves the injection of water into a stream of dust-laden gas flowing at a high velocity through a contracted portion of a duct. thus transferring the dust particles to the water droplets which are subsequently removed.

volatile matter — those constituents of coal, exclusive of moisture. that are liberated from a sample when heated to 1750° F for seven minutes in the absence of oxygen.

water gas— gas produced by the reaction of carbon (in coal or coke) and *steam* to *yield* mixtures of carbon monoxide and hydrogen: similar to synthesis gas.

water gas shift — the reaction between water vapor and carbon monoxide to produce hydrogen and carbon dioxide or the reverse: $CO + H.O \rightleftarrows H: + CO_2$.

working fluid — a gas stream which directly does work. e.g.. powering a gas turbine.

BIBLIOGRAPHY

(1) First Quarter, 1980 Energy Statistics, DOE, Energy Information Administration Quarterly Report, July 1980, p. 7.

(2) Ibid., above, Table 1.2, Consumption of Energy by Type, p. 5.

(3) DOE Energy Information Administration, Annual Report to Congress, Statistics and Trends of Energy Supply, Demand, and Price, May 1978, pp. 3 and 5.

(4) Proceedings of the First Inter-American Conference on Renewable Sources of Energy, An Alcohol Fuels Perspective, Dr. E.J. Bentz, Jr., November 25-29, 1979, pp. 256.

(5) Interpreted from page 6, reference (1) above, and July 1980 Lundberg letter price list.

(6) (a) "A Comparative Assessment of Five Long-Run Energy Projections", DOE/EIA/ CR-0016-02, December 1979.

(b) "National Transportation Policy Study Commission Final Report", June 1979.

(c) "Changes in the Future Use and Characteristics of the Automobile Transportation System", Office of Technology Assessment, 1979.

(d) "U.S. Energy Supply Prospects to 2010", CONAES, National Research Council, 1979.

(e) United Nations UNITAR Conference on Long-Term Energy Resources, December 1979.

(f) "Draft Mid-Term Forecasts", EIA, DOE, May 1980.

(g) "U.S. National Energy Outlook", draft version, Shell Oil Co., February 1980.

(h) "World Energy Outlook", Exxon, December 1979.

(i) "Energy Synthetics", draft unpublished report, Exxon, May 1980.

(j) "Coal Technologies Market Analysis", ESCOE, January 1980.

(k) Proceedings, Conference on Alternate Energy Sources "Transportation and Energy--Outlook

ejb&a

to 2000", Dr. E.J. Bentz, Jr. , Kuwait, February 1980; McGraw Hill (publishing date expected, September 1980) .

(7) Council on Environmental Quality 1975. Energy Alternatives: A Comparative Analysis. Washington, D.C. 2 volumes.

(8) Office of Technology Assessment 1980. An Assessment of Oil Shale Technologies, volumes I and II. Report OTA-M-118, 119. Washington, D.C.

(9) National Academy of Sciences 1979. Energy in Transition, 1985-2000. Washington, D.C. NAS. Gamarekian, S.E. and V. Wheaton, editors.

(lo) Perry, H. 1972. Conservation of Energy. Prepared for the Library of Congress, Congressional Research Service for the Senate Committee on Interior and Insular Affairs, 92 Congress. Serial 92-18.

(11) Schurr, H., J. Darmstadter, H. Perry, W. Ramway, M. Russell, 1979. Energy in America's Future. Baltimore and London: The Johns Hopkins University Press. Tron, J.R., R.B. Hass, J. Hinkel, and S.A. Skillings, editors.

(12) Us. Congress. Senate Committee on the Budget 1979. Synthetic Fuels. Report of Subcommittee on Synthetic Fuels.

(13) Nuclear Regulatory Commission 1980. Activities, Effects and Impacts of the Coal Fuel Cycle for a 1,000 MWe Electric Power Generating Plant. Publication NUREG/CR-1060. Washington, D.C.

(14) Energy Development Consultants, Inc. 1979. Oil Shale in Colorado, 1979. Golden, Colorado.

(14a) National Academy of Sciences, 1975. Mineral Resources and the Environment. Washington, D.C.

(14b) National Coal Association, 1978. Coal Facts 1978-1979, National Coal Association, Washington, D.C.

(14c) National Coal Association, 1979, Coal Data 1978, Washington, D.C.

(14d) John Harte and Mahamed El-Gasseir. "Energy and Water," Science, volume 1999 (February 10, 1978), pp" 623-634

(15) Steele, R.V. 1976. "Oil Shale Mining and Spent Shale Disposal", Synthetic Liquid Fuels Development Assessment of Critical Factors. U.S. Energy Research Development Administration ERDA 76-129/2, volume II.

(16) prien, C.H. 1974. Current Oil Shale Technology. Denver Research Institute. University of Denver. Denver, Colorado.

(17) U.S. Department of Energy 1980b. Technology Characterization. DOE/EV-0072. Washington, D.C.

(18) Report of the National Transportation Policy Study Commission, June 1979.

(19) U.S. Department of Energy--Electric Power Research Institute 1979. Advanced Materials for Alternative Fuel Capable Directly Fired Heat Engines. Proceedings of the First Conference on Advanced Materials for Alternative Fuel Capable Directly Fired Heat Engines. Castine, Maine. July 31-August 3, 1979.

(20) Report to the U.S. National Alcohol Fuel Commission, "Factors that Affect the U.S. Market Demand and Utilization of Methanol From Coal Within the Transportation Sector, 1980-2000." E.J. Bentz & Associates, Inc., 10/80.

(21) Schreiner, M. 1978. Research Guidance Studies to Assess Gasoline from Coal by Methanol-to-Gasoline and Sasol-Type Fischer-Tropsch Technologies. Mobil Research and Development Corporation. Princeton, New Jersey.

(22) Sullivan, R.F. et al. 1980. "Refining of Syncrudes". 1980 Proceedings of 45th Midyear Meeting of American Petroleum Institute, May 12-15, 1980. Houston, Texas.

(23) Gilder, G.A. and V.P. Burton 1980. "Coal Liquid/Petroleum Refinery Integration". 1980 Proceedings of 45th Midyear Meeting of American Petroleum Institute. May 12-15, 1980. Houston, Texas.

(24) Fischer, R.H. and R.E. Hildebrand 1979. "Transportation Fuels from Synthetic Gas". Proceedings of Symposium on Advances in Coal Utilization Technology. May 14-18, 1979. Institute of Gas Technology. Chicago, Illinois.

(25) Cameron Engineering, Inc. 1978. Synthetic Fuels Data Handbook. Second Edition. Compiled by G.L. Baughman.

(26) Neuworth, M.B. and E.C. Moroni 1979. "Development of a Two-Stage Liquefaction Process". Proceedings of Symposium on Advances in Coal Utilization Technology. May 14-18, 1979. Institute of Gas Technology. Chicago, Illinois.

(26a) U.S. Department of Commerce, 1979, Compendium Report on Oil Shale Technology. Report PB 293 279. General Electric Co., Santa Barbara, Ca.

(26b) Bertram, R. V. and G. E. Irish, 1980, "Transportation Fuels from Shale Oil." 1980 Proceedings - Refining Department, American Petroleum Institute, 45th Midyear Meeting, May 12-15, 1980, Houston, TX.

(27) Energy Research and Development Administration 1977. Market Oriented Program Planning Study (MOPPS). Assessment of Environmental, Health, and Safety Constraints on Selected Energy Technologies. Washington, D.C.

(28) Hill, R.F. 1980. Synthetic Fuels Summary. Washington, D.C. The Engineering Societies Commission on Energy, Inc.

(29) Rogers, K.A. and R.F. Hill 1979. Coal Conversion Comparisons. Washington, D.C. The Engineering Societies Commission on Energy, Inc.

(30) Rogers, K.A. et al. '1978. Comparison of Coal Liquefaction Processes. Washington, D.C. The Engineering Societies Commission on Energy, Inc.

(31) Bentz, E.J. and Associates 1980. Synthetic Fuels--An Overview of Key Selected Synfuel Technologies and Their Health and Environmental Impacts. Prepared for EPA. Springfield, Virginia.

(32) Us. Department of Energy 1980c. Environmentally Based Siting Assessment for Synthetic Liquid Fuels Facilities. Publication No. DOE/EV/10287. Draft. Washington, D.C.

(33) Us. Department of Energy 1980d. Synthetic Fuels and the Environment: An Environmental and Regulatory Impacts Analysis. Draft. June, 1980.

(34) "Production of Synthetic Liquids from Coal: 1980-2000, A Preliminary Study of Potential Impediments, Final Report, Bechtel International, Inc., December 1979.

(35) Environmental Protection Agency 1980c. Environmental, Operational, and Economic Aspects of Thirteen Selected Energy Technologies. Publication No. EPA-600/7-80-173.

(36) Environmental Protection Agency 1980d. Sasol: South Africa$s Oil From Coal Story--Background for Environmental Assessment. EPA-600/8-80-- 02, January, 1980.

(37) Fluor Engineers and Constructors, Inc. 1979a. Coal Gasification Technology. Report SFR-101.

Fluor Engineers and Constructors, Inc. 1979b. Coal Liquefaction. Report SRF-103.

Fluor Engineers and Constructors, Inc. 1979c. Oil Shale Processing Technology, Report SFR-102.

(37a) Brookhaven National Laboratory, 1978. Energy System Network Simulator. Sevian, W. A. and P. D. Moskovitz, Biomedical and Environmental Assessment Division.

(37b) Environmental Protection Agency, 1980a. Alternative Fuels Monitor: Coal Gasification and Indirect Liquefaction. prepared by Magler, Bailly & Company, Washington, D.C.

(37c) R. F. Probstein and H. Gold, 1978. Water in Synthetic Fuel Production. The Technology and Alternatives. The MIT Press, Cambridge, Mass. and London, England.

(38) Screening Evaluation Synthetic Liquid Fuels Manufacture, Ralph M. parsons Co., August 1977, EPRI-AF-523.

Process Engineering Evaluations of Alternative Coal Liquefaction Concepts. April 1978, EPRI-AF741.

Research Guidance Studies to Assess Gasoline from Coal by Methanol-to-Gasoline and Sasol-type Fischer/Tropsch Technologies. Mobil Research & Development Corp., FE-2447-9. January 1979.

Conceptual Design of a Coal to Methanol Conversion Plant. Badger Plants Inc., FE-2416-24. February 1978.

Conceptual Design of a Coal to Methanol to Gasoline Conversion Plant, Badger Plants, Inc., FE-2416-43, March 1979.

(39) Upgrading of Coal Liquids For Use as Power Generator Fuels. Mobil Research & Development Corp., EPRI-AF-873. December 1978.

An Investigation of the Utilization of Coal Derived Liquid Fuels in a Combustion Turbine Engine. Westinghouse Research Lab, EPRI-AF-873 Appendix A, December 1978.

Economic Screening Evaluation of Upgrading Coal Liquids to Turbine Fuels. Mobil Research & Development Corp. EPRI AF-710. March 1978.

Crude Oil vs. Coal Oil Processing Comparison Study. UOP, Inc. ET-3117. November 1979.

Ref n ng and Upgrad ng of Synfuels From Coal and O l Shales by Advanced Catalyt c Processes Chevron Research Company FE 2315 25 to 48 April 1978 to 1980.

Refining of Coal Derived Syncrudes. R.H. Fischer, R.E. Hildebrand. U.S. DOE presented to American Chemical Society, March, 1980.

An Assessment of Oil Shale Technologies (Vols. 1 & 2) of the United States--Office of Technology Assessment 1980. USGPO--052-003-00759-l&2 .

(40) Constraints on the Commercialization of Oil Shale. E. Merrow, Rand Corp. R-2293, September 1978.

Classifying Capital Cost Estimates for Pioneer Grass Plants. K. Phillips, R. Horwalts, E. Menow, Rand Corp., August 1979.

Achieving a Production Goal of 1 Million Barrels[Day of Coal Liquids by 1990, by TRW Systems, Inc. et al FE-10490-01, March 1980.

(41) ANG Coal Gasification Company Fuel Environmental Budget Statement, North Dakota Project. FERC--EIS-0001, April 1978.

Cost of Pipeline and Compressor Stalin Conductors Under Non-budget Pipeline Certificate Authorizations as Reported by Pipeline Companies. Various permits--FERC Office of Pipeline and Producer Regulation Staff.

(42) Ibid, above.

(43) Business Week, September 29, 1980, p. 83.

(44) Ibid., p. 34.

(45) Achieving a Production Goal of 1 Million B/D of Coal Liquids by 1990, TRW, March 1980.

(46) Feasibility Appraisal Production of Synthetic Fuels From Direct and Indirect Liquefaction Processes--UOP/SDC, 3/1980.

(47) An Assessment of Commercial Coal Liquefaction Processes Equipment Performance and Supply, January 1980, Mechanical Technology Incorporated, Latham, New York.

(48) National Coal Association, "Coal Synfuel Facility Survey," August 1980.

(49) Private communication, E.J. Bentz, 5/80.

(50) Private communication, E.J. Bentz, DOE, 11/80.

(51) Ibid., reference 20.

(52) Ibid., reference 31.

(53) Ibid, reference 34.

(54) Private conversation, E.J. Bentz, DOE, 11/80.

(55) Private conversation, E.J. Bentz, EPA, 11/80.

(56) Ibid., reference 31.