Application of Solar Technology to Today's Energy Needs—Vol. I

June 1978

NTIS order #PB-283770



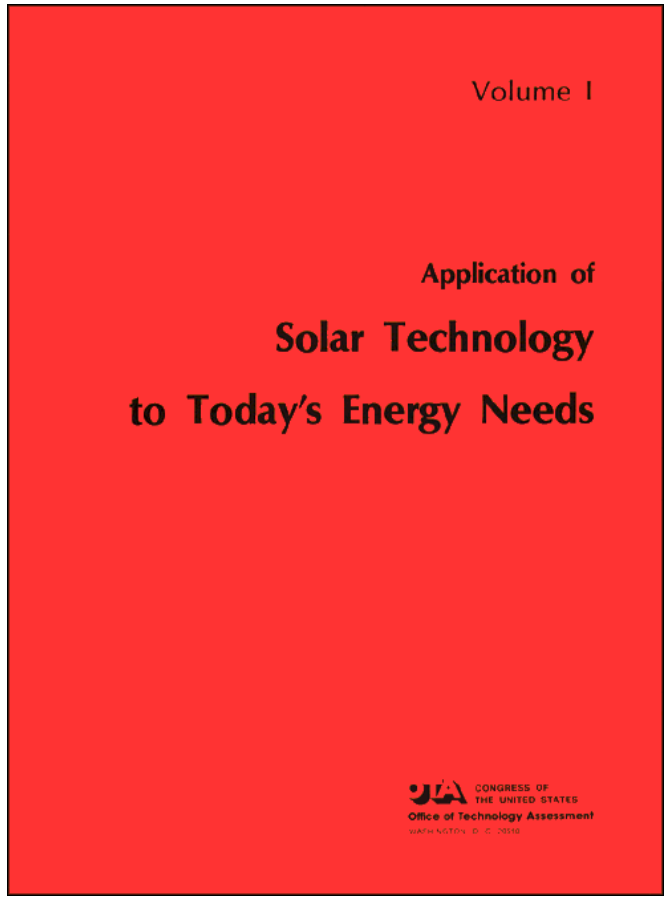

Library of Congress Catalog Card Number 78-600060

For sale by the Superintendent of Documents, U.S. Government Printing Office
Washington, D.C. 20402, Stock No. 052-003-00539-5

FOREWORD

This report reviews a range of solar energy systems designed to produce thermal and electrical energy directly from sunlight with units small enough to be located on or near the buildings they are designed to serve. It examines the state-of-the-art of the technology, identifies the circumstances under which such systems could be economically attractive, and discusses the problems encountered in integrating these devices into existing energy generation and delivery systems. The study also assesses the impact that widespread use of decentralized solar energy equipment could have on the United States — its energy supplies, its ability to achieve foreign policy objectives, its physical environment, its levels and patterns of employment, and the functioning of society as a whole. It is apparent from the study that development of a large market for such equipment would have a profound impact on the way an industrial society evolves.

The analysis conducted for this report found that with aggressive Federal support, there are realistic circumstances in which small-scale energy systems could compete favorably with conventional energy sources in many residential, commercial, and industrial applications by the end of the next decade. Given the limited number of choices available for meeting our future energy needs, the options made available by this technology deserve serious consideration

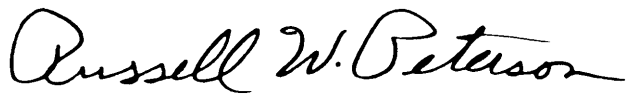

RUSSELL W. PETERSON
Director
Office of Technology Assessment

OTA Solar Advisory Panel

Jerry Grey, Chairman
Private Consultant

William W. Caudill
Caudill, Rowlett & Scott

John J. Gunther
United Conference of Mayors

Klaus P. Heiss
ECON, Inc.

Morton Hoppenfeld
University of New Mexico

Charles Luttman
The Ralph M. Parsons Company

James MacKenzie
Massachusetts Audubon Society

Paul Maycock
Texas Instruments'

Marjorie Meinei
University of Arizona

Larry T. Papay
Southern California Edison Co.

Paul Rappaport
RCA-David Sarnoff Research Center**

Floyd E. Smith
International Association of Machinists

Ephraim M. Sparrow
University of Minnesota

OTA Energy Advisory Committee

Milton Katz, *Chairman*
Director, International Legal Studies, Harvard Law School

Thomas C. Ayers
President and Chairman of the Board
Commonwealth Edison Company

Kenneth E. Boulding
Professor of Economics
Institute of Behavioral Science
University of Colorado

Eugene G. Fubini
Fubini Consultants, Ltd.

Levi (J.M.) Leathers
Executive Vice President
Dow Chemical USA

Wassily Leontief
Department of Economics
New York University

George E. Mueller
President and Chairman of the Board
System Development Corporation

Gerard Piel
Publisher, Scientific American

John F. Redmond, Retired
Shell Oil Company

John C. Sawhill
President
New York University

Chauncey Starr
Electric Power Research Institute

---

*Resigned after accepting position with U S Department of Energy.

**Resigned after accepting position as Director of the Solar Energy Research Institute

OTA Solar Energy Project Staff

Lionel S. Johns, Energy Program Manager
Henry Kelly, Project *Leader*
David Claridge **John Furber** **John Bell**

OTA **Energy** *Staff*

Richard Rowberg
Lynda Brothers
Marvin Ott
Dorothy Richroath
Linda Parker
Lisa Jacobson
Joanne Seder
Radmilia L. Bartok
Rosaleen Sutton

Technical **Assistance**

Oak Ridge National Laboratories
Sandia Laboratories
Lawrence Livermore Laboratory
Department of Energy
Division of Solar Energy

Consultants

Timothy Adams
Linda Ashworth
Richard Bourbon
Allen Brailey
Jack Burby
Peter Ceperley
Thomas Erwin
Crayson Heffner
Sam iker
Ann Cline Kelly
Renal Larson
Robert Morse
Corbyn Rooks
Edward Sproles
Donald Veraska
Don Watt
Mary Zalar

Contractors

American Institute of Architects Research Corporation
Environmental Law Institute
Thermo Electron Corporation
Cotton & Wareham
Jet Propulsion Laboratory
University of Oklahoma, Science& Public Policy Program

OTA Publications Staff

John C. Holmes, *Publishing Officer*
Kathie S. Boss **Joanne Heming**

Acknowledgment

This report would not be possible in its present form without the careful review and information supplied by hundreds of individuals and companies in the many fields and specialties covered by this report.

Contents

Chapter		Page
	Overview	3
1.	Introduction	11
II.	Overview of Onsite Solar Technology and Summary of Economic Analysis.	21
III.	Federal Policy for Promoting and Regulating Onsite Solar Energy	59
Iv.	Onsite Electric-Power Generation	115
v.	The Relationship Between Onsite Generation and Conventional Public Utilities.	139
	AppendixV-1.–Analytical Methods	161
VI.	Legal Aspects of Onsite Solar Facilities.	175
VII.	The Impac of Solar Energy on U.S. Foreign Policy, Labor, and Environmental Quality	199
VIII.	Collectors	245
	Appendix VIII-A.–Techniques Used to ComputetheOutput of Representative Collector Designs	303
Ix.	EnergyConversion With Heat Engines	329
x.	Energy Conversion With Photovoltaics	393
xI.	Energy Storage	429
	Appendix XI-A.–A Technique for Estimating the Allowable Cost of Storage Devices.	487
	Appendix XI-B. —Analysis of Performance	488
	Appendix XI-C. —Costs of Designs Chosen for Analysis	496
xI 1.	Heating and Cooling Equipment	507

NOTE: This volume summarizes the analysis of system performance and costs, discusses policy, major impacts and constraints on solar markets, and **reviews direct** solar technology. Volume II discusses the analytical methods used and provides details on each system analyzed.

OVERVIEW

OVERVIEW

Page

Results of the Economic Analysis. 3
Onsite Solar Technology 5
Major Impacts 6
What Can the Federal Government Do?. 7

Overview

This assessment reviews the potential of a family of solar energy equipment called "onsite" energy systems because they are designed to be located on or near the buildings or groups of buildings which they provide with heat or electricity. The technologies examined produce useful energy directly from sunlight; equipment making indirect use of solar energy, such as wind machines or devices using biological materials as a fuel, is not examined.

The technical feasibility of most direct, onsite solar energy systems has been experimentally established. While onsite solar energy systems are competitive with conventional energy sources in a limited number of applications today, widespread use will require demonstrating that projected cost reductions can be achieved. By the mid-1980's, the range of costs which can be reasonably forecast for energy from onsite energy devices will overlap the range of costs forecast for energy from conventional sources for a variety of residential, commercial, and industrial applications. An uncertainty inherent in such comparisons is the price society will be willing to pay for the social and environmental benefits of onsite solar energy.

If energy can be produced from onsite solar energy systems at competitive prices, the increasing centralization which has characterized the equipment and institutions associated with energy industries for the past 30 years could be dramatically altered; basic patterns of energy consumption and production could be changed; energy-producing equipment could be owned by many types of organizations and even individual homeowners. Given the increasing fraction of **U.S. industrial assets which are being invested in energy industries, tendencies toward centralization of many aspects of society could also be affected.**

The onsite solar energy industry is in most cases a straightforward extension of existing heating, cooling, and air-conditioning industries. It could clearly develop without Federal participation. Unless a concerted effort is made to identify the special problems of onsite technology, remove regulatory barriers, provide financial incentives, and support an aggressive research, development and demonstration program, however, it is unlikely that onsite equipment will be able to contribute significantly to U.S. energy supplies by the year 2000. With such support, it is possible that onsite solar devices could be made competitive in markets representing over 40 percent of U.S. energy demand by the mid-1980s, although the output of solar equipment installed by this date is unlikely to be able to meet more than a small fraction of this potential market. Existing Federal programs controlling fuel prices and subsidizing nonsolar energy sources have created a situation where, without compensating subsidies, solar energy is **uniquely disadvantaged. Federal support of solar energy has concentrated disproportionate attention to central electric generating systems instead of exploiting the special opportunities provided by onsite equipment**

RESULTS OF THE ECONOMIC ANALYSIS

1 **Solar systems designed to provide domestic hot water (3,5 percent of U.S. energy demand) are competitive with electric hot water systems in most parts of the United States today if comparisons are based on the average monthly payments made for energy during the life of the system. Solar space-heating**

for new residential and commercial buildings (1 7.8 percent of U.S. energy demand) is somewhat less advanced but is, or should soon be, marginally competitive with heat pump and electric resistance space heating in many areas of the country.

2. On the same basis, solar space-heating and hot water systems may be competitive with oil or gas delivered to typical residential or commercial customers by the mid-1980's. The solar energy equipment should be competitive with heating systems using synthetic oil and gas.

3. Solar energy from systems which provide 100 percent of the heating and hot water required by large buildings or groups of houses may not cost significantly more than energy from systems designed to meet 50 to 70 percent of these demands.

4. Cost reductions and improvements in the performance of solar cells (photovoltaics), small engines powered from solar sources, and solar collectors possible by the mid-1 980's may result in onsite solar energy systems capable of producing electricity for residential and commercial buildings for $0.04 to $0.10/kWh — a price which would probably be competitive with electricity delivered to these customers from conventional utilities.

5. Full exploration of the potential for energy conservation and the use of simple "passive" solar space-conditioning techniques should clearly precede any attempt to use more complex solar energy equipment.

6. It will be possible to construct onsite energy systems capable of supplying all electrical and thermal energy needs of a building from direct solar energy systems, but it will usually be less expensive to rely on some other form of energy as a backup if this alternative is available. In some of the cases examined, the 100-percent solar systems did not cost significantly more than smaller solar installations on a life-cycle cost basis; in other cases, however, 100-percent solar systems were twice as expensive.

7 Providing backup electricity to onsite solar energy systems may, in some cases, cost electric utilities more per unit of energy delivered than the average utility cost. Solar energy systems are not unique in this respect, however, since many conventional buildings impose demands on electric utilities which adversely affect utility costs. When the real incremental cost of producing electricity for each type of building is computed, the total cost of operating solar energy systems backed up with conventional electric utilities is, in many cases, comparable to the cost of operating conventional all-electric buildings. Most solar heating systems are equipped with energy storage devices which, at a modest additional expense, can be used to reduce or possibly eliminate most adverse effects on electric utilities attributable to solar demand patterns.

8 Existing rate structures and available metering equipment may not be adequate to produce an acceptable pattern of charging and discharging onsite storage equipment. As a result, onsite storage equipment may not be able to eliminate al l adverse affects of solar equipment on electric utilities. It is extremely expensive to leave costly generating equipment idle; large electric-generating systems may therefore not be the most attractive way to provide backup power to onsite solar energy systems, particularly if the onsite devices generate electricity as well as thermal energy and low-cost electric storage is not available. The best technique for providing backup power requires a careful understanding of the relative costs of onsite and centralized storage equipment, energy distribution costs, and the costs of maintaining standby generating capacity. These costs vary greatly around the country.

9. By the mid-1980's, solar systems designed to provide agricultural or industrial process heat at temperatures below 5500 F (2 to 7 percent of present U.S. energy demand) will not be competitive with direct combustion of coal in large industries but may be an attractive alternative in situations where the direct use of coal is expensive or restricted because of environmental regulations, lack of access to coal supplies, or other factors.

10. The fact that onsite solar energy systems are calculated to be competitive on the basis of monthly costs does not mean that these devices will rapidly penetrate the market. The fraction of U.S. energy supplies which onsite systems wit I supply will depend on the extent to which customers make purchases on the basis of operating costs (instead of comparing only the initial purchase price), the rate at which an infrastructure for manufacturing, installing, and supporting such systems develops, the removal of regulatory barriers, and the incentives which are available.

11. The small size of onsite solar equipment does not preclude utility ownership, although there may be regulatory problems associated with such an arrangement. Utilities can provide market aggregation and financing for systems where building owners are unable to raise capital. Utilities will uniquely compare the cost of energy from new solar equipment with the cost of energy from new conventional plants — energy which typically is more expensive than the average cost of energy delivered to utility customers.

ONSITE SOLAR TECHNOLOGY

1. Onsite technology is not characterized by a single dominant design concept but rather by an enormous variety of competing approaches. Systems must be tailored to specific climates and applications. The equipment works best when the building or industrial process which it serves is designed to make the most efficient use of the solar resource.

2. There are no clear economies of scale in solar collectors, solar cells, or in many types of engines compatible with solar energy, although there are economies of scale in many kinds of energy storage equipment. Small, distributed energy systems can readily "cogenerate" heat and electricity and have several advantages not easily expressed in conventional economic terms: relative ease of using low-temperature heat, short construction times which permit rapid adjustment to changing energy demand; relatively small investments in each installation; and efficient land use (since collectors can be located on rooftops).

3 Development of simple collectors– both stationary systems and devices which move, tracking the Sun — is of central importance. While a wide range of applications can probably be found for collectors which cost $7 to $12 per square foot, development of collectors costing $4 to $7 per square foot would greatly increase the number of potential near-term uses for solar energy equipment. The optical and mechanical problems confronted in developing such devices will more probably be overcome with patience and clever designs than with fundamental research breakthroughs.

4 The potential of low-cost thermal storage has not been adequately explored. This should make possible solar heating systems requiring no backup energy. Development of a chemical reaction capable of storing solar energy efficiently and economically in chemical form would greatly expand the potential uses of solar energy. Neither approach has been given adequate priority.

5. The cost of solar cells can be reduced by mass producing current silicon cell designs, developing thin films of amorphous silicon material, cadmium sulfide, or other materials with acceptable efficiencies, or by designing low-cost optical systems to focus light on high-efficiency cells. Solar engines can be designed to operate at 1300 to 2000 F using machines that are essentially refrigerators running backward, at intermediate temperatures (using standard steam engines and advanced designs), and at high temperatures (1,400 °F) using Stirling engines and other machines with potentially high efficiencies. A funding strategy must be developed which amounts to a system for placing bets on a broad spectrum of schemes.

6. There is a large overlap between technology developed for onsite solar energy systems and technology developed to improve the efficiency of using conventional energy sources — particularly in energy storage and engine design.

7. No major technical problems should be encountered in connecting solar thermal or solar electric systems to electric utility grids. Utilities should be able to purchase excess electricity generated in onsite units for 25 to 100 percent of the price they charge for electricity.

MAJOR IMPACTS

1. Onsite solar energy services can be easily integrated into the existing construction and heating, ventilating, and air-conditioning industries. The equipment can be manufactured, installed, maintained, financed, and insured by the organizations and individuals now performing the same services for conventional heating and cooling and industrial equipment.

2. If small solar energy systems prove economically attractive, the concept of the "natural monopoly" of existing utilities would need to be reviewed.

3. The widespread use of onsite equipment would increase the number of jobs required to generate energy. Jobs would be created because imported oil would be replaced with energy from domestically produced solar equipment and because solar energy is more labor intensive than energy from conventional sources. The new jobs would be primarily in construction trades, metals, and chemicals. They would tend to be located where such jobs now exist and should provide a relatively stable source of employment, The long-term implications of a shift to labor-intensive energy sources, however, are not well understood.

4. Solar energy systems produce far less aggregate air and water pollution during their manufacture and operating lifetimes than energy systems based on fossil fuels. Solar equipment may be a particularly attractive energy source in areas where increases in emissions are prohibited. The major environmental problem of solar equipment is the use of land. However, this impact on land use can be minimized by carefully integrating solar collectors into building designs, but densely populated urban and suburban communities may have regions where shade from trees or buildings make the use of onsite solar energy unattractive.

5. Widespread use of solar energy worldwide could greatly reduce tensions associated with world competition over diminishing sources of fossil fuels without encouraging the use of technologies which increase the risk of nuclear weapons proliferation. Growth of a solar industry would reduce imports and encourage investments in the U.S. economy,

WHAT CAN THE FEDERAL GOVERNMENT DO?

1 The most straightforward, but politically the most dlfficult, **approach to stimulating markets for onsite solar energy would be to remove prlce controls and implicit subsidies granted to conventional energy sources, and allow energy prices to rise to the cost of energy from new production facilities**

2 **The marketing of solar equipment could be seriously disrupted if incompetent or unethical dealers give the technology a reputation for poor performance Performance standards and uniform testing procedures must be developed rapidly to prevent abuses It is necessary, however, that these standards be continually updated to keep pace with a rapidly moving technology and to insure that the regulations do not inadvertently discriminate against new concepts**

3 **Investment tax credits, low-interest loans, exempt ions from property tax, and accelerated depreciation allowances on solar equipment can significantly reduce the cost of solar energy perceived by prospective buyers No one program will work equally well to provide incentives for all systems to all types of owners, Similar kinds of incentives applied to manufacturers could be used to reduce the price of solar equipment.**

4 **Regulations governing the rates at which energy is sold to and purchased from onsite energy systems need to be developed rapidly, Regulations preventing nonutility ownership of onsite generating equipment, and interfering with utility ownership of onsite energy equipment need to be reviewed and updated.**

5 **A variety of Federal subsidy programs already exist which can be modified to encourage the use of solar energy systems The use of solar equipment on Federal installations can stimulate sales and reduce costs,**

6 **A significant amount of basic research and advanced development work remains to be done. Promising areas of research were noted in the previous discussion of onsite technology**

7, **The U.S. program in onsite solar energy could be improved through closer cooperation with foreign programs. Many types of onsite solar energy are likely to be economically attractive abroad before they enter commercial markets in the United States.** It **is unlikely that other nations will move rapidly to integrate solar energy options into their energy planning unless the United States makes a major commitment to use of solar energy.**

8. **Perhaps the most important step which can be taken with respect to onsite solar energy is to insure that the advantages of the onsite approaches are seriously considered in constructing overall U.S, energy planning,**

Chapter I

INTRODUCTION

Chapter I.— INTRODUCTION

Page

Onsite Solar Technology 15
Techniques for Assessing Onsite Technology 15
integration of Onsite Facilities With Other Energy Sources. 15
Research and Development 17
Economics 18
Possible Impacts of Onsite Solar Energy. 22
U.S. Security and World Trade 22
Labor 22
Utility Participation. 23
Environment and Land Use 23
Federal Policy 24
Standards 25
Other Specialized Legal and Regulatory Problems 25
Comparison With Current Policy. 26

LIST OF TABLES

Table No. Page

I. The Potential of Onsite Solar Energy Equipment 19

Chapter I
Introduction

Small solar energy units attached to or located near individual buildings, industries, or groups of buildings (called "onsite" energy systems throughout this work) must be considered potentially important additions to the limited number of opportunities for meeting the world's demand for energy both in the next few decades and into the indefinite future. This study examines a set of these technologies characterized by the fact that they convert the Sun's energy directly into useful thermal and electric energy; the study does not examine wind power, systems using biological materials as fuels, or other concepts for using the Sun's energy indirectly.

The major barrier to the widespread use of onsite solar energy is its cost. Developments in research can lead to reduced costs and improved performance, but the fundamental feasibility of the technology is well established. Onsite solar devices are technicality capable of meeting virtually all residential, commercial, and industrial energy requirements; they can provide heating and air-conditioning, hot water for residences, heating for industrial and agricultural processes, and mechanical and electrical power.

The energy supplied by these systems is expensive by today's standards. The extent to which this continues to be a barrier depends in part on the success of numerous programs designed to reduce the cost of solar equipment. It will also depend heavily on changes in the price of conventional energy. The market for new types of energy producing and consuming devices is likely to change rapidly in the next two decades as energy costs increase and become a major concern. In many ways it is easier to make confident predictions about the future costs of solar energy—which depend for the most part on predictable manufacturing techniques—than it is to estimate the cost of fuels whose price may depend on monopoly price manipulation, international competition over diminishing energy supplies, the stringency of federally imposed environmental controls, and other problems which are difficult to anticipate.

The issue of costs is treated in much more detail in later sections of this report, but the only fair way to summarize the results of the analysis is to note that the range of possible costs of solar energy overlaps the range of possible costs of energy from conventional sources in a large number of cases. It is simply not possible to make dogmatic statements about the conclusions. The significance of the fact that solar and nonsolar costs overlap, however, *should not be* **underestimated since this overlap means that it may be necessary to choose future energy options on the basis of criteria other than the estimates of future costs (the cost analysis being indecisive). At a minimum it implies that the solar energy alternative should be supported with at least as much attention and care as other options for meeting energy needs in the future.**

The analysis indicated, for example, that solar systems for providing domestic hot water and building heat are marginally competitive with electric heating in many parts of the Nation today, These systems may be competitive with oil and gas (where it is available) in many parts of the country with; n a decade if solar prices fall and the price of oil and gas rises at rates which appear in reasonable forecasts. Solar equipment should be able to compete with synthetic fuels. Electricity from solar sources is now only attractive in remote areas where alternate energy sources are very expensive. There are sound reasons to speculate, how-

ever, that the price of solar electricity may fall by a factor of 15 or more by the mid-1980's and reach a price where solar electric devices could be installed to provide supplemental electricity to houses and commercial buildings.

Inflation resulting from increases in energy prices may have the effect of offsetting some of the cost reductions expected from new designs. It is entirely possible, however, that even the price of solar equipment now in mass production will rise more slowly than the price of conventional energy. Processes used to manufacture the components of solar devices are likely to make more efficient use of energy if energy prices rise since there is clearly considerable room for improving the energy efficiency of American industry. The design of solar devices can also be changed to minimize the use of components whose costs are linked most closely to energy costs. Frames for solar collectors, for example, can be made from steel, aluminum, concrete, plastic, wood, and many other materials. Ultimately, of course, it would be possible to manufacture solar equipment using solar energy.

A number of the advantages of solar energy equipment are not comfortably expressed in the strict economic terms discussed above. For example, widespread use of onsite solar equipment could have a favorable impact on American labor — by creating attractive new jobs, on international stability — by easing the competition for conventional energy sources without increasing opportunities for proliferation of nuclear weapons, and on the environment — by replacing polluting energy sources. (These advantages are discussed at some length in chapter `Vii.) The use of solar energy during the next two decades will depend largely on the value which society attaches to these advantages.

Widespread use of onsite solar equipment [or indeed of onsite energy equipment of any kind) would reverse a 40-year trend toward centralization of energy sources. The larger plants tended to be less expensive to build per unit of output, more efficient, and able to use a greater variety of fuels. Siting problems (for large plants) tended to be minimized by the ability to choose a few remote locations. Conventionally fueled onsite facilities were often abandoned because their owners were concerned about the cost of maintaining equipment and the chance that a system failure would be expensive. Investments in onsite equipment were usually not as attractive as investments in areas more directly related to the business and a feeling emerged that energy generation was best left to the expertise of utilities. As a result, most design improvements in the past few decades have occurred in the technology of larger generating equipment, and the bulk of Federal research activity in energy has been conducted in large systems.

There are, however, reasons to suppose that the unique nature of onsite solar energy equipment may offset some of the advantages which impelled centralization:

- The basic solar resource is distributed. Solar units on individual buildings could in some cases reduce transmission and distribution costs and losses. Integrating the equipment with a building roof or with a parking facility can minimize the land required for solar equipment.
- Location of equipment onsite greatly increases design opportunities and makes it easier to match the energy equipment designs to specific onsite energy demands; in particular, it is easier to use the thermal output of the collectors. A great deal of overlap exists between techniques and devices being developed for onsite solar systems and equipment used for energy conservation. The solar designs are usually most successful when integrated into a coherent plan for matching energy resources to the end use.
- Smaller equipment can be built more quickly than larger facilities, thereby reducing interest and inflation during construction. This equipment can be added in relatively modest increments.

- Onsite systems can also match reliability to local needs. A highly sophisticated industry, for example, may not be able to tolerate power failures lasting a few hours per year while some areas in developing countries may be very pleased with systems which may not provide power for a few days each year—particularly if there are significant savings associated with accepting this level of reliability. Centralized systems force all customers to accept the highest level of reliability demanded by any customer.

In evaluating the advantages and problems of onsite solar equipment, it is important to recognize that solar equipment differs from conventional systems in several significant ways:

In the first place, the systems which are examined in this study do not really represent a single technology, but rather an enormous range of technologies, A great variety of equipment components have been developed (many of which are reviewed in later sections of this study) and these components can be combined in many different ways to meet specific energy requirements in specific climates.

A second unique characteristic of onsite systems is the number of arrangements which can be made for owning and operating onsite equipment, The small scale of the devices makes it possible for individuals or institutions other than utilities and major oil companies to invest in equipment capable of generating useful energy. This does not necessarily mean that investor-owned utilities will not play a useful role in the development of the technology; there are cases where there may be advantages associated with utility ownership and maintenance of onsite equipment. It is also possible that municipal utilities, nonregulated companies selling or renting onsite equipment, or even neighborhood cooperatives will play a role in owning and managing the equipment, Each of these possibilities raises different legal and regulatory issues.

Another singular feature of the small solar devices is that, in comparison to larger energy equipment, they are relatively unsophisticated and would probably be manufactured, financed, insured, and maintained by the people and institutions now performing the same kinds of services for conventional heating and cooling systems or industrial equipment.

A fourth distinction between using solar energy and energy derived from conventional fossil fuels is that the cost of solar energy typically depends on temperature and on when the energy is needed. Solar energy is best suited for meeting energy demands during daylight hours. Fossil fuels typically burn at temperatures near 2,000 'C, whether this high temperature is needed or not. There is no great penalty associated with operating an industrial process at high temperatures up to this threshold. While solar energy can provide high temperatures (indeed, one of the first sophisticated uses of direct solar energy was a facility for high-temperature metallurgy), fluids at such temperatures are expensive to collect, transport, and store. The implications of having energy costs depend on temperature and time have never been seriously evaluated. It is an issue which may be of increasing concern regardless of whether solar energy is used, since there are many ways of recovering relatively low-temperature energy from commercial and industrial processes. If an economy began to reflect this new set of costs, the relative values of energy-intensive materials and sources could change significantly. It may be necessary to reevaluate the techniques used for each industrial process to make maximum use of the solar resource. (Development of a successful thermochemical or photochemical reaction which can use solar collectors to produce chemicals capable of being transported, stored, and later reacted to produce high temperatures would do much to eliminate the penalty paid for high-temperature solar energy.)

While the cost of solar energy may depend on temperature, it may not depend on

the size of the system employed. Economies of scale in solar equipment are very difficult to establish, particularly if it is possible to connect several small generating and consuming facilities with a common electrical or thermal distribution system.

Solar collectors are generally modular and typically the only economies of scale in collector arrays result from price reductions obtained through large single purchases. This also applies to solar cells used to generate electricity since even the largest solar cell systems consist of arrays of small, individual generating units. Large heat engines are typically less expensive per unit of output than small systems of identical design, but the cost of these engines is typically a small part of the overall cost of the solar energy system; the cost of these systems is usually dominated by the price paid for collectors. It may also be possible to produce small heat engines which are as efficient as larger engines. The cost per unit of output could be comparable to that of large engines if mass-production techniques are used. Many types of storage systems, however, do show significant economies of scale at least up to a size where they are capable of storing enough energy for several hundred typical residences. Much more work needs to be done to determine the best size and placement of storage devices of all kinds.

All onsite solar facilities will face the difficulties which have led to the steady decline in conventional onsite generating facilities: poorly engineered designs, inability of organizations other than utilities to raise capital for investments with relatively long payback times, uncertainties about maintenance costs, and numerous other concerns. Given the uncertainties inherent in an analysis of this type, it was simply not possible to establish that there either clearly were or were not economic advantages for small solar systems.

Even if onsite solar energy systems could be unambiguously shown to be a preferred energy source, it is clear that they would have a long way to go before they could provide a major fraction of the energy used in the United States, For example, the combined output of all solar heating and hot water systems used in the United States during 1977 displaced about 1 billion kilowatt hours of thermal energy and this is less than 1/200 of 1 percent of total U.S. energy requirements in 1977. The peak electrical output of all solar electric systems was about 1,500 kilowatts. Starting from this small base, solar sales would need to increase by about 50 percent per year for 20 years to achieve an output equivalent to 10 percent of U.S. energy requirements. Achieving this level of output would require an investment of more than $500 billion.

While the growth rates and the investments required to increase use of onsite equipment seem ambitious, and would clearly require an enormous growth in the infrastructure of manufacturers, installers, and salesmen needed to make, market, finance, and service the solar equipment, it must be recognized that any technology which will supply a large fraction of U.S. energy needs by the turn of the century will require an enormous growth rate and investment; yet some new technology must be available during this period as the world reaches the physical limits of low-cost supplies of oil and gas. The transition cannot be a painless one since all of the new energy sources are likely to be more expensive than current energy. The major remaining question is whether we will be able to take advantage of the warning which the geologists have given us, reflect on the options available, explore their potential, and prepare a strategy for a graceful transition to energy sources we can live with, or, whether energy policy will be guided by inadvertence, chance, and reactions to sudden crises and shortages.

The remainder of this study is devoted to defining the circumstances in which onsite solar technologies, with their rather curious set of characteristics, could play a significant role in supplying energy. It examines the technical opportunities now available and under development; reviews the current

and potential future cost of integrated systems based on these technologies operating in several representative cities in the United States; explores the legal and regulatory problems encountered by operators of small generating equipment units; tries to explain the impact which widespread use of onsite solar technology might have on the quality of the environment, on the American labor force, and on the achievement of major U.S. foreign policy objectives; and finally, it attempts to define the role and responsibility of the Federal Government in regulating and promoting the technology. Some of the major results of this analysis are outlined in the present chapter.

ONSITE SOLAR TECHNOLOGY

Adequately assessing the opportunities presented by onsite technology is enormously difficult because there is such a diversity of approaches, many of which have never been adequately investigated. The number of options is increased by the fact that, by its nature, onsite equipment is tailored to specific applications in specific climates, since the equipment is much more efficient if care is taken to integrate the onsite equipment into the building or industrial apparatus to which it provides energy.

The number of technical alternatives in onsite solar equipment is astonishingly great, in part because research in these areas is on a scale where a small firm or individual inventors can develop useful concepts. Concepts have been developed by groups ranging from backyard inventors to well-funded Government and industrial laboratories. More than 200 firms are now manufacturing solar collectors, and competition will probably eliminate many of the products on the market, This fact presents a particularly difficult problem for Federal planners attempting to develop a coherent research program.

TECHNIQUES FOR ASSESSING ONSITE TECHNOLOGY

It is important to compare competing technologies on the basis of their ability to perform a specific set of tasks in a specific location – generalizations and simple "measures of merit" can be very misleading. This is particularly true when the costs of onsite systems are compared with the cost of centralized generating facilities; an accurate estimate of the cost of energy from a central unit should include an analysis of all losses in transmission and inefficiencies encountered when the energy from the central facility is converted to useful energy at the site. In the analysis presented in this report, systems have been compared on the basis of their ability to meet all of the energy requirements of a single family house, an apartment building, and other defined patterns of energy consumption. Computer analysis has been used to evaluate the performance of equipment operating in Albuquerque, N. Mex., Boston, Mass., Fort Worth, Tex., and Omaha, Nebr. The performance of a system component cannot be fairly evaluated without examining its performance as a part of an integrated system. The utility of a collector design, for example, cannot be assessed without understanding how it will perform when connected to thermal storage devices and subjected to the winds, temperature changes, cloud patterns, and fluctuating energy demands that characterize actual installations.

INTEGRATION OF ONSITE FACILITIES WITH OTHER ENERGY SOURCES

Carrying the logic of this thesis one step further, it can be seen that it is also necessary to review the performance of onsite energy equipment as an element of a system

capable of providing all of the energy requirements of a region. Because most onsite devices will be connected with conventional energy sources which provide backup power, the performance characteristics of the onsite devices can affect costs of energy delivered to all parts of the community. This is particularly true if electricity is used to provide backup power since the cost of electric power increases significantly if it is required to meet irregular demands; it is very costly to maintain generating equipment which will only be used during cloudy periods.

The question of providing backup power to solar energy systems is intimately connected with the problem of determining whether energy generated from onsite solar equipment should be stored, or whether it should be transmitted to other consumers who may have a need for the excess onsite energy. Analysis conducted for this study indicates that it is usually preferable to allow the onsite unit to sell energy to a community-wide electric distribution grid than to store the excess electricity in onsite battery equipment (although this result could be reversed if very low-cost batteries are developed). In general, if energy transmission is relatively inexpensive, it is preferable to connect as many customers and producers together as possible. The value of the excess energy sold from onsite generating equipment depends on the nature of the conventional generating equipment in the region, the local climate, and a number of other factors. The analysis indicates that electric companies should be able to purchase excess electricity generated by residential and commercial onsite solar facilities for 25 to 100 percent of the price at which they sell energy. Determining a just rate for purchases and sales can be extremely complex and in some States, legal and regulatory problems may have to be overcome to achieve a just relationship. Presently few utilities are willing to purchase energy from onsite generating systems. (These issues are discussed in detail in chapters V and VI.)

None of the technical problems associated with connections to existing electrical grids should present major problems. Relatively inexpensive devices are on the market which will disconnect onsite equipment from utility lines so that linemen can perform repairs safely, and meters are available which can monitor the production of thermal energy and the purchase and sale of energy from onsite systems. Moreover, onsite equipment should not create insurmountable load management problems for utilities, even if a relatively large number of their customers use onsite devices.

The relatively low cost of onsite thermal energy storage creates a situation where it may be preferable to store electrical energy generated in central electric-generating facilities during the night (when electric demands are low) in onsite thermal storage when this energy is to be used for heating. The storage tanks typically associated with solar heating systems provide an ideal opportunity for this kind of storage but conventional buildings can be equipped with storage facilities which are charged only with electricity from conventional sources. When a careful analysis is made of all of the costs incurred in meeting the energy needs of typical buildings (including both onsite costs and the real costs undertaken to provide backup power) it appears that costs of both solar and conventional buildings are reduced when energy used for heating (or backup heating for the solar system) is stored onsite during periods when demands on the electric utilities are low. The costs of conventional systems were reduced more than the costs of the solar systems, however, and solar heating systems compared less favorably with conventional systems when these methods were used. There were, however, a number of cases where the solar equipment still was economically preferable.

It is important to recognize that while the relatively uneven loads imposed by providing backup power to solar energy equipment can have an adverse effect on overall utility costs, many other kinds of energy-consuming devices also impose very uneven loads on a utility. Insulating a building, for

example, tends not to decrease the peak electrical demand significantly during the summer (the period when most utility peaks are highest), but does decrease demands during the winter, resulting in increased utility costs. Similarly, electric heat pumps impose much more uneven loads than baseboard resistance heating. (In fact, when all costs are evaluated, heat pumps may be more expensive to operate than electric resistance heating systems which purchase electricity only at night.)

In evaluating costs, it was assumed that the electric utility used a set of central generating systems which were optimally chosen to meet each type of demand, This is the only valid way to compare costs over the long term, It is tautological that equipment designed to minimize costs for a conventional load pattern will be less efficient if it is used to meet a different load pattern (e. g., loads which include a large amount of solar backup demands). Admittedly, regulatory delays and the mortmain of existing plants and equipment will always prevent utilities from optimizing their facilities to new load patterns over the short term.

There are circumstances where it may be preferable to transmit thermal energy rather than to store it onsite since there are very significant economies of scale in thermal storage. The analysis in this study discovered several areas where 100 percent of the heating and hot water requirements of individual houses could be met by solar energy if a number of homes were connected to a large central storage tank. Distributing energy in thermal form instead of electrical form was also found to be attractive in a number of conventional solar energy systems designed to meet all of the energy needs of a large community. I n these cases, the thermal energy was very inexpensive because it was a byproduct of generating electricity and the bulk of the cost of the energy was the cost of delivery.

The difficulties encountered in providing backup power from electric utilities to onsite solar facilities, characterized by large, expensive generating equipment, may create a situation where it is preferable to provide backup entirely from natural or even synthetic oil or gas. In several cases examined, it was less expensive to provide backup from these chemical sources than from electricity even if it was assumed that the chemical systems' fuels increased rapidly in price.

RESEARCH AND DEVELOPMENT

in a surprising number of cases, onsite solar technologies are not economically attractive because of the high costs of such mundane processes as installing and aligning collectors and bending metal in fabricating facilities. If these costs cannot be reduced with some ingenious procedures, it is difficult to imagine a research breakthrough which would radically reduce the cost of solar energy derived from such systems. If these costs can be reduced, a number of attractive devices are possible with existing technology. What is needed is perhaps more the genius of the man who invented the zipper than the genius of an Einstein.

There are a number of areas where research and development seem particularly important.

- Determining the best way to design a building structure to maximize natural heating and cooling,
- Developing simple collectors from extremely low-cost materials (e. g., cheap, durable plastic films),
- Developing techniques for reducing the cost of manufacturing simple tracking and concentrating collectors,
- Developing economical techniques for storing large amounts of energy in hot water or rocks in order to meet all of the annual thermal demands of buildings,
- Improving techniques and materials for laying insulated pipes for thermal distribution systems,

- Developing chemical reactions which can be used to store or transfer thermal energy,
- Developing advanced electrochemical storage devices,
- Designing an inexpensive and reliable heat engine capable of working at relatively low temperatures (e. g., below 2500 F),
- Designing an inexpensive, reliable, high-efficiency engine capable of working at very high temperatures (e. g., 1,4000 to 2,0000 F),
- Developing low-cost materials for solar cells, and
- Developing dyes for a simple concentrating collector.

It is also vitally important that a strong program in basic research accompany these applied development projects. Research in sol id state physics, surface chemistry, metallurgy, thermochemical and photochemical reactions and heat transfer is of particular interest.

ECONOMICS

Table l-l indicates the size of different energy markets in the United States, summarizes the potential of direct solar energy in each market, and estimates when solar equipment could begin to enter this market.

Direct onsite solar energy equipment is likely to make its first major impact by providing supplemental heat and hot water for residential and commercial buildings. This is not an insignificant market since demand for energy in this category represented about 20 percent of all energy consumed in the United States in 1975. There is already a growing market for solar hot water systems in regions with plentiful sunlight and high electric rates where natural gas is not available for new buildings. A market for solar heating systems is also developing in these areas. If it was assumed that electric rates increased 45 percent by the year 2000, solar heating and hot water systems with plausible near-term costs showed lower life-cycle costs than heat-pump systems in houses in three of the four cities examined in this study. The solar system was competitive in all four cities when a 20-percent investment tax credit was given to the solar system.

Solar energy was found to become an attractive alternative to oil and gas heating of hot water in the mid-1980's, if consumers are convinced that oil prices will increase to $23 to $35 per barrel by the year 2000, or that gas prices will reach an equivalent level. Fuel prices would probably rise at least as rapidly as this if a major fraction of U.S. liquid fuels were derived from synthetic sources by the year 2000.

Most of the solar heating and hot water systems installed today are not capable of meeting all of the heating requirements of the buildings they serve; a conventional furnace or baseboard heaters must be used during periods of prolonged cloudiness. This limits the fraction of the energy consumed for building heat which solar devices can replace. It is possible, however, to construct solar systems providing 100 percent of a building's heating demands by using a sufficiently large storage facility. The analysis conducted for this study indicated that within 3 to 5 years it should be possible to construct systems capable of supplying all of the heating and hot water requirements of large buildings at prices which would be competitive with conventional electric heating in three of the four cities examined. The systems would be competitive in all four cities if a 20-percent investment tax credit was granted to the solar equipment.

Table I-1.—The Potential of Onsite Solar Energy Equipment

Demand type	Percentage of total U.S. energy demand in 1975	Potential of onslte solar energy equipment
1. RESIDENTIAL AND COMMERCIAL	(36)	
a. Hot water	3.5	Competitive now with electric hot water heating on life-cycle cost basis and with oil and gas if year 2000 prices expected to reach$15-20/bbl equivalent.
b. Space-heating	17.8	Combined hot water and heating systems marginally competitive with resistance heating and heat pumps now or in the near future, competitive with oil and gas if solar prices drop, or, if year 2000 prices expected to reach $23-35/bbl equivalent. Many ‘‘passive” approaches clearly attractive.
c. Electricity for lighting and other miscellaneous demands	9.0	Possibly competitive by mid- to late-1980’s if electric rates increase by 50 percent by the year 2000. Competitive in remote areas today.
d. Air-conditioning	4.3	Some systems available, but economically attractive systems unlikely until early or mid-1980’s.
e. Gas cooking and other miscellaneous uses	1.2	Cooking conveniently available from direct solar sources only through electricity.
II. TRANSPORTATION	(26)	No major role probable for direct, solar energy. Some market possible for electric vehicles charged from on-site electric systems or vehicles using chemical energy generated on site.
III. INDUSTRY	(38)	
a. Electric motor drives, electrolytics, & misc. electrical demands	8.7	Penetration of this market unlikely until 1990’s unless research progresses faster than expected. Solar cogeneration systems may be attractive in some areas by the mid-1980’s.
b. Process heat at temperatures below 2120 F	2.0 (7.0)’	Possibly competitive with oil and gas by 1980’s if prices are expected to **increase** to $14-16/bbl equivalent by the year 2000. Competition with direct combustion of coal unlikely in large plants unless conversion to coal is very expensive.
c. Process heat at temperatures of 2120 to 5500 F	5.3 (6.5)*	Possibly competitive in 1980’s with oil and gas if prices reach $19-25/bbl equivalent by 1985 and $30-40/bbl by 2000.
d. Process heat at temperatures greater than 550° F	18.6 (12.4)*.	Probably competitive only when onsite solar energy for electric motor drives is competitive.
e. Chemical feedstocks	3.3	No market for direct solar energy.

“If heat used to raise the temperature of materials from 600 F is Included

. . Nearly 90 percent of the process heat used at these temperatures is consumed in blast furnaces, steel mills! stone, glass, and clay processing, and petroleum refining

SOURCES. Total energy requirements for Industry, transportation, residential, and commercial consumers obtained from U S Department of the Interior (Bureau of Mines) News Release March 14, 1977

Details for residential and commercial consumption patterns obtained from
J R Jackson and W S Johnson, *Commercial Energy Use A Disaggregation by Fuel, Building Type, and End Use,* Oak Ridge National Laboratory (ORNLICON-14) February 1978, page 9
E Hirst and J Carney, *Residential Energy Use to the Year 2000 Conservation and Economics,* Oak Ridge National Laboratory (ORNL/CON 13) September 1977, page 9

Details of industrial energy consumption based on
D S Freeman, (ed) *A Time to Choose,* Ballinger, Cambridge, Mass , 1974, p 456
InterTechnology Corporation, *Analysis of the Economic Potential of Solar Thermal Energy to Provide Industrial Process Heat* (ERDA COO/2829.1}, p 53 (This survey included Institutions using 59 percent of U S Industrial process heat)

Electricity used in residences and commercial facilities for lighting, television sets, dishwashers, and other appliances is expected to represent about 9 percent of the primary energy consumed in the United States in 1985. Residences and commercial buildings pay the highest rates for electricity since these rates must include charges for the costly equipment needed to distribute the electricity to a large number of small consumers. It is likely, therefore, that devices for generating electricity from sunlight will find their first large markets in this sector. (Solar electric devices will find substantial markets in remote military outposts, signalling devices, and other installations before the large residential market can be approached. The market for systems in remote areas could, however, amount to several hundred millions of dollars of annual sales, particularly if markets in nonindustrial countries can be captured.) Within 10 to 15 years it may be possible to develop onsite solar devices capable of producing electricity for $0.04 to $0.10/khVh, rates which may be competitive with the cost of electricity delivered to residential and commercial customers from new utility generating plants.

There is also a potentially large market for direct solar energy equipment in industry and agriculture. Table l-l indicates that 2 to 7 percent of U.S. energy is consumed in these sectors at temperatures below the boiling point of water, and 7 to 13 percent is consumed at temperatures below 3500 F. Solar equipment is now available which can easily provide fluids or direct heating at these temperatures. In many ways, industrial and agricultural markets are more attractive than the residential and commercial markets since the residential and commercial customers are much more diverse and will probably require a more complex and expensive infrastructure for sales and installation. The larger customers are also likely to be confronted with gas curtailments during the next decade and will be in the process of selecting a replacement for natural gas.

There are, however, several major obstacles to solar use in industry and agriculture. Consumers in these categories can use a variety of different conventional fuels (many can burn coal directly) and pay much less for electricity than residential and commercial customers. Moreover, they typically expect payback times on the order of 1 to 3 years for investments in new plant equipment. The cost of industrial solar heat can also be somewhat higher than solar heat provided for homes and residences if it is necessary to install collectors in fields where land, footings, and other aspects of site preparation must be charged to the solar equipment and where piping heat to the factory can be expensive. Smaller installations can be supported by building roofs and heat is generated close to the site where the energy is used.

Analysis of the cost of providing electricity and process heat to a large three-shift industry from different kinds of energy equipment which began operating in 1985 indicated that direct solar heat for low-temperature applications would be competitive with oil if it was assumed that oil prices increase to $15 to *$20* per barrel by the year *2000* and if the solar equipment is financed by a private utility. Solar heat at temperatures in the range of 3500 F was competitive only if it was assumed that oil prices reach $19 to $25 per barrel by 1985, and are $30 to $40 per barrel by 2000. Competition with natural gas and coal was possible for systems starting in 1985 only if it was assumed that the prices of these fuels increase by a factor of nearly three (from 1976 levels) by the year 2000 (e.g., coal costing $60 per ton). While such price increases are possible for natural gas, it seems unlikely that coal prices will increase at this rate. It is also possible that solar heat at temperatures below 5000 to 6000 F will be competitive with heat derived from synthetic hydrocarbons made from coal.

While most solar heating systems for large industrial or agricultural facilities may not be fully competitive with conventional fuels

before the mid-1980's, it will almost certainly be possible to find industries whose specific problems are well suited to the use of solar energy in the near future. There may well be a large near-term market for grain drying systems in less-developed countries, for example. Near-term markets for solar equipment in the industrial sector could also result from existing environmental legislation; solar energy may prove to be an attractive way to expand industrial capacity while minimizing increases in emissions.

Solar cogeneration devices using solar cells or Stirling engines may be attractive in roughly the same circumstances that found solar hot water competitive, although the solar systems were less attractive when compared with cogeneration systems using conventional fuels. It seemed unlikely that solar electric systems which did not cogenerate would be able to compete with the low cost of electricity delivered to industrial facilities from conventional sources until at least the mid-1 990's, although unexpected progress in research could well accelerate the rate at which the solar electric systems become competitive.

Solar energy used for direct heat in blast furnaces, glass plants, and other facilities requiring heat at very high temperatures (uses representing 12 to 19 percent of U.S. energy consumption) are unlikely to be competitive before solar electric systems. Development of an efficient thermochemical process, which could be conducted in a solar collector and reversed in a special burner at high temperature when heat is needed, would greatly improve the prospects for using direct solar energy in high-temperature applications.

Direct solar energy is unlikely to be used as a substitute for any of the chemical feedstocks which now consume about 3 percent of U.S. energy. Biomass would clearly seem to be the preferred solar source for feed stocks.

Similarly, transportation, which consumes about 25 percent of U.S. energy, is unlikely to provide a major near-term market for onsite direct solar energy. There may be some circumstances where electric vehicles could be charged from solar-generated electricity. Development of a thermochemical reaction which yields a portable chemical with a high-energy density would also make "direct" solar transportation a possibility. It is unlikely that the direct solar sources would be preferred to synthetic fuels from biological or other sources.

Considerable caution must be exercised in interpreting statements about the "competitiveness" of solar energy systems. First, the benefits of solar equipment can only be realized if the prospective owners compare solar and alternative systems on the basis of life-cycle costing. Life-cycle costs will, in turn, depend on the type of owner since each will have a different tax status, sources of capital, and economic expectations. Solar devices may be owned by the residents of the building, a private corporation, or a municipal or privately owned utility. Each will make different estimates of the advantages of the solar investment. Whether prospective solar customers will actually employ such a procedure is difficult to anticipate and will depend to some extent on the skill with which the solar equipment is sold.

It is difficult to establish a fair basis for computing the cost of nonsolar equipment since the performance of nonsolar equipment is likely to improve as the price of conventional energy increases. There is also great variation in the cost of energy around the country; regional differences in energy prices are greater than differences in the amount of sunlight available.

it must be recognized that if onsite solar energy is to make a major impact on the U.S. energy economy by the turn of the century, it will be necessary to find ways of installing solar equipment on existing buildings. This process can be difficult: such installations are likely to be more expensive than devices attached to new structures, although there is at present no reliable information about the additional costs which could be expected. It is likely that the percentage increase in costs would be smaller in larger buildings,

There may well be situations where it is not possible to retrofit an existing structure with solar equipment. Densely populated urban areas and heavily treed suburbs present particularly difficult problems, and solar energy used at these sites is unlikely to come from onsite systems. Building orientation may present difficulties in some cases but a roof must have a particularly poor orientation or roof shape to present a major problem for a solar installation.

POSSIBLE IMPACTS OF ONSITE SOLAR ENERGY

Since onsite solar equipment would undoubtedly be designed, manufactured, financed, installed, and operated by the same organizations currently associated with the construction of buildings and industrial facilities, the impact on American society as a whole will probably be very minimal. Several areas, where impacts would probably be greatest, have been identified and studied in some detail.

U.S. SECURITY AND WORLD TRADE

Extensive worldwide development of solar energy systems would, in time, relieve some of the strain imposed on international stability by competition for energy resources, reducing economic difficulties faced by oil-importing nations. It could provide a reliable source of power not dependent upon imports, and the necessary technology would be accessible without a need for large numbers of highly trained engineers or foreign technicians to operate them. It should be possible for many countries to manufacture solar equipment using existing industrial and construction skills and facilities. Solar energy will be economically attractive i n most other countries before it is competitive in the United States where energy is relatively plentiful and inexpensive. The development of indigenous energy sources abroad should also reduce pressures to accelerate the development of nuclear power, thereby reducing opportunities for the proliferation of the technology and materials required to make nuclear weapons.

I n spite of the development of indigenous solar industries abroad, foreign markets for solar energy devices may provide an excellent opportunity for U. S. exports, Since many nations will find it desirable and possible to manufacture solar equipment locally, the sale of licenses, patents, and turn-key plants may dominate exports. The international utilization and impact of solar energy, however, may depend critically on U.S. initiatives over the next few years. I n most areas, U.S. research is the most advanced in the world, so many nations will look to the United States for guidance in this field. A U.S. commitment to solar power would encourage foreign commercialization of the technology, if only by giving it prestige.

LABOR

Onsite solar technology appears to be more labor-intensive than contemporary techniques for supplying energy, thus, in the short term, the introduction of solar energy devices will create jobs in trades now suffering from serious unemployment. Jobs would also be created by replacing imported oil and gas with solar energy derived from domestically produced equipment. Jobs would be created in the following areas:

- Manufacturing of components (solar collectors, heat engines, photovoltaic devices, storage batteries, controls, etc.),
- Installation of systems (plumbing, sheet-metal work, steamfitting, electrical work, carpentry, excavation, and grading), and

- Maintenance of installed systems (including routine adjustments and repairs for small systems and full-time operators for larger units).

The work created in these areas will be distributed widely across the country, allowing most workers to find jobs in areas close to their homes, and the jobs created should be relatively safe. One effect of emphasizing onsite solar energy, for example, would be to create more new construction jobs than new coal-mining jobs. It is also interesting to notice that nearly a third of the employment associated with a conventional electric utility involves transmission and distribution of energy and billing and other services — services which would probably not be affected in any way by a shift to onsite power. There would be no need for laborers to live in remote or temporary construction sites. Work on solar equipment should require only simple retraining programs for most construction trades. There may, however, be shortages both of engineers and architects qualified to design solar equipment, and of operators trained in the maintenance of some of the larger and more sophisticated solar devices that have been proposed.

The long-term applications for employment of solar and other new energy technologies cannot be reliably assessed with contemporary economic methods. Long-term labor impacts will depend on forecasts of future growth rates, both in the economy and in U.S. energy consumption — subjects about which there is great confusion and disagreement.

UTILITY PARTICIPATION

Utility participation in onsite generating facilities offers several advantages:

- The utiiity is i n the best position to optimize the size and placement of all generating, storage, and transmission equipment in the region;
- Utilities alone can compare the cost of energy from new onsite equipment with the cost of energy from new central facilities — al I other owners will compare onsite costs with the lower, average cost of energy from all central generating facilities;
- Utilities can offer the equivalent of 100 percent financing for new generating plants (onsite or otherwise) and are able to raise capital for investments with long-term paybacks–something which few other institutions can do; and
- Utilities already have maintenance crews and billing services, which could be expanded to cover the operation of onsite generating equipment.

A number of these advantages could be realized without utility ownership of onsite systems if care is taken in the design of utility rates.

Municipal utilities may be able to play an important role in regional planning for onsite solar energy systems and their access to relatively low-cost capital may make municipal financing of solar energy projects attractive.

ENVIRONMENT AND LAND USE

While solar energy equipment is not completely free of adverse environmental effects, providing energy from sunlight will have a much smaller environmental impact than conventional sources providing equivalent amounts of energy.

Solar energy may provide an opportunity to expand population and increase industrial capacity in areas where such growth may be constrained by the Clean Air Act. Large-scale conversion to the direct combustion of coal will make it difficult to maintain current levels of air quality unless solar energy, or some other nonpolluting energy source, is introduced to reduce the demand for energy from fossil sources. The use of solar energy can also reduce the net releases

of carbon dioxide. The significance of this depends on the extent to which greatly increased CO_2 releases could adversely affect world climates— and this is not well understood now.

The primary environmental effect of utilizing onsite solar energy will be reduction of the potential adverse environmental effects associated with other energy sources. The negative environmental effects of solar energy devices stem primarily from two sources: (1) land-use requirements, which could compete with other, more attractive uses of land near populated areas, and (2) emissions associated with the mining and manufacture of the materials used to manufacture solar equipment (e. g., manufactured steel, glass, aluminum, etc.) In most of the cases examined, however, the reduction in emissions attributable to operating a solar facility instead of a conventional one can equal the extra emissions associated with the manufacture of the solar device in 3 to 9 months. In addition to these primary effects, a number of the specific storage and energy conversion systems discussed in later sections of this report could have adverse environmental effects because of noise, minor emissions (associated primarily with manufacturing components), and use of toxic chemicals.

The land-use impact of onsite solar equipment can be less serious than the problems associated with isolated solar equipment, since in most cases the onsite equipment can be integrated into buildings or local landscapes and extensive transmission facilities are not required. If additional surface area is required, however, lack of suitable land close to populated areas could place major constraints on the use of onsite solar equipment.

FEDERAL POLICY

One of the attractive features of onsite solar equipment is that it may be the only new energy source that can be developed, financed, and installed without Federal assistance of any kind; it is simply an extension of existing construction industries. Federal energy policy will, however, affect the rate at which onsite solar energy enters the market, regardless of whether an attempt is made to develop a specific policy for solar energy. Federal poticies have made the market in which solar technologies compete an artificial one. Energy prices are influenced by a bewildering array of regulations, subsidies, and controls which, in several instances, have had the inadvertent effect of reducing the attractiveness of solar equipment. Examples include the policy of maintaining residential energy rates at artificially low levels, decisions to support larger types of energy equipment with preferential tax credits, and disproportionate amounts of research funding given to larger energy equipment.

There is little doubt that without Federal assistance, solar markets will grow relatively slowly. Legislation can greatly accelerate the rate at which this market grows if this is judged to be a desirable objective.

The following types of policies can be effective.

1. Direct incentives to potential customers (chiefly tax incentives, loan subsidies, and allowances of accelerated depreciation).
2. Assistance to manufacturers (including incentives for purchase of manufacturing equipment, research and development grants, and Federal purchases) and assistance for testing laboratories certifying the performance of onsite equipment.
3 Support of basic research and development programs in fields related to onsite solar energy.

4 Legislation which might eliminate some barriers to usage of onsite solar systems (this would include freeing onsite equipment from regulation **as a public utility and assisting States in designing local procedures for protecting the "sun rights" of owners of solar equipment).**

5. **Encouragement of the use of solar energy in other countries through foreign assistance grants, joint research programs, and other techniques.**

6. **Programs to support education and training in fields related to solar energy.**

Tax credits, low interest loans, accelerated depreciation allowances, and exemption from property tax can be powerful tools in reducing the perceived cost of solar energy. A 20-percent investment tax credit, for example, could reduce the effective cost of solar energy in residential applications by 15 to 30 percent; the combination of a 20-percent investment tax credit; 5-year depreciation allowance, and an exemption from property tax, could lower the perceived cost of solar energy by 50 to 80 percent. A program making 3-percent loans available to homeowners would be equivalent to an investment tax credit of about 34 percent. These subsidies would have the effect of increasing sales, resulting therefore in a decrease in the cost of individual components if they stimulate mass production.

Tax credits reduce Federal revenues but the net cost of the credits to the Government is difficult to calculate, The Federal subsidy per unit of energy produced by subsidized solar equipment is roughly equal to the difference between the costs (with or without incentives) of a unit of solar energy perceived by equipment owners. That is, if a policy has the net effect of reducing the customer's perceived costs by $0.01/kWh, the Government will lose approximately $0.01/kWh in tax revenues for each kWh generated by the solar system receiving the subsidy. The Government's costs, however, will be compensated to some extent by the fact that solar-related businesses would be stimulated by the subsidy, thus producing increased tax revenues. This analysis of costs does not attempt to attach a monetary value to the health benefits of reduced air pollution and other social benefits

Federal support of small solar energy systems has been consistently hampered by the small staff available to DOE's Division of Solar Energy Small staffs make it difficult to manage a large number of innovative projects.

STANDARDS

A difficulty encountered with any new technology, and particularly one involving as many small and inexperienced manufacturers as in the current solar energy industry, is that it is necessary that standard testing procedures be developed rapidly, and in step with the development of each type of technology. It is also necessary, however, that these standards be reviewed constantly so that new and different design approaches are not inadvertently ruled unacceptable. Small firms are frequently in such a weak financial position that it is difficult for them to offer acceptable guarantees. A reputation for failed installations could be a serious barrier to the rapid expansion of the solar industry,

Standards have been slow to develop and inspectors frequently do not know what to look for in novel systems.

OTHER SPECIALIZED LEGAL AND REGULATORY PROBLEMS

Onsite solar facilities are currently controlled by laws and regulations written with entirely different energy systems in mind. Although that is the case, this study finds surprisingly few barriers to large-scale installation and operation of onsite solar facilities. The legal barriers which do exist can, in most cases, be removed with routine regulatory review. Resistance to changes in zoning

or building codes, for example, generally arise when an interested party will be adversely affected; it is not likely, however, that builders, owners, labor unions, or public officials will perceive onsite solar generation as a threat.

Some concern has been expressed about the fact that owners of solar facilities have no legal grounds for objecting to construction projects which would have the effect of shading their collectors. While this may present a serious problem, the skillful application of existing legislation, local covenants, zoning authorities, and building code regulations will probably provide as much protection as it is reasonable to expect. The analysis conducted for this study found no need for Federal action in this area.

The regulatory problems which may present the greatest problems for onsite solar energy devices, and the ones which it may be most difficult to resolve, involve the laws and rulings governing public investor-owned gas and electric utilities. If it becomes possible to generate energy at competitive prices using onsite solar energy equipment, the "natural monopoly" of utility generation of electricity, which forms the basis of most utility law, would be called into question; the only real "natural monopoly" may be equipment for transmitting and distribution of energy.

Problems in this area fall primarily into three categories: 1) establishing just rates for power sold as backup power for onsite solar installations and just rates for utility purchases from onsite facilities, 2) resolving the regulatory problems faced when an individual or institution other than a utility attempts to sell electricity or thermal energy (utilities are given a monopoly on such sales in many regions), and 3) resolving the regulatory problems confronted when existing utilities attempt to own and operate onsite energy equipment. Resolving these issues requires a clear concensus about the proper role of utilities in onsite equipment.

COMPARISON WITH CURRENT POLICY

This report does not make prescriptive recommendations, but presents three points of view which give rise to a range of specific poticies affecting onsite solar power generation. The discussion (which appears in chapter III of this report) is intended to illustrate the policy alternatives available and to assess their relative effectiveness. This analysis found several broad approaches to be potentially effective which do not play a significant role in current Federal programs. As a consequence, the emphasis of this report differs in several significant respects from Administration policy.

1. The policies examined here would place greater emphasis on accelerating a wide variety of onsite solar energy systems (including solar electric systems) during the next decade; the existing program appears to stress heating and cooling systems, relegating most other applications of solar power to longer-term research programs and placing major emphasis on the development of large, centralized electric-generating systems.
2. The policies examined here place a high priority on bringing life-cycle costing techniques to the attention of consumers, investors, and other groups in a position to make decisions about energy equipment.
3. In contrast to the Administration's plan, which concentrates exclusively on consumer incentives, the policies examined here will include a number of techniques for providing direct assistance to equipment manufacturers.
4. Policies examined here place major emphasis on the problem of ensuring an equitable relationship between onsite solar equipment and existing utilities, with particular emphasis on establishing reasonable rates both for the purchase of backup power from the utility and for the sale of power generated by onsite equipment to utilities. More at-

tention is paid to providing backup from natural gas and chemical fuels rather than electricity and more attention is paid to the opportunities for distributing thermal energy.

5. Policies here emphasize the encouragement of foreign sales of onsite generating equipment, licenses, and patents and of providing assistance to nations attempting to acquire a reliable, indigenous source of power.

Onsite solar energy has unique features as an energy source, so Federal policy must have unique features to encourage its development. Unfortunately, precedents for Federal programs, which have succeeded in encouraging the development of a commercial product, are almost impossible to find; products developed and promoted by agricultural extension services are perhaps the only clear exception. Badly managed Federal intervention in the market can do more harm than good. At a minimum, it must be recognized that developing and promoting a diverse set of technologies to be manufactured, installed, financed, and owned by a diverse set of institutions will be very different from the programs designed to develop new central generating plants which will clearly be designed for use and operation by utilities.

What will be needed is an unprecedented amount of bureaucratic flexibility, imagination, and care in determining where Federal intervention can help and where the best policy is restraint.

There will be no way to avoid taking risks. The bulk of this report attempts to provide the basis for comparing the risks associated with onsite solar energy equipment with the risks which must be taken in supporting other energy sources. If nothing else, the study indicates that the potential of onsite solar energy systems cannot be easily dismissed and that it is dangerous to be dogmatic about the subject at this early stage. There is enough uncertainty about the future of the world's energy supplies, and enough problems have developed with conventional solutions, that it is necessary to be a little humble about the extent to which fundamental questions about supplying and consuming energy are understood.

Chapter II

OVERVIEW OF ONSITE SOLAR Technology AND SUMMARY OF ECONOMIC ANALYSIS

Chapter II.--OVERVIEW OF ONSITE SOLAR TECHNOLOGY AND SUMMARY OF ECONOMIC ANALYSIS

Page

Introduction em. ... .,*, *. ... ... ** 31

Methodology 8 - 9 . . . . . 3 2

Summary of System Costs for conventional Buiidings 34

Technology Overview . . *, **. . . , ... **. , , . . 36
Passive Solar Energy Systems 36
Active Solar Systems 36

Summary of Cost Comparisons. 40
Solar Heating and Hot Water 40
Solar Air-Conditioning . . . .* 43
Solar Electric Systems Using Photovoitaics .43
Solar Electric Systems Using Heat Engines.. 48
Community Energy Systems 46
Industrial Systems 50

LIST OF TABLES

Table No. Page

1. Assumed Residential Fossil Fuel Prices In the Year 2000 33
2. Typical Assumed Nonsolar Electricity Rates in the Year 2000 33
3. Levelized Monthly Energy Costs for Single Family Houses Not Using Solar Energy 35
4. Levelized Monthly Energy Costs for Single Family Houses With Extra insulation 35

Table No. Page

5 Levelized Monthly Energy Costs Per Unit in a 196-Unit High Rise Apartment. 35
6. Levelized Monthly Energy Costs for Solar Heating and Hot Water Systems 41
7. Solar Heating and Hot Water Systems for Single Family Houses Compared With Conventional Systems Based on Oil and Gas. 42
8. Levelized Monthly Energy Costs for Solar Air-Conditioning and Heating 43
9. Fiat-Plate Photovoitaic Systems on Houses With Extra insulation and Storm Windows 44
10. Flat= Plate Photovoltaic Systems Mounted on the Roof and Over the Parking Lot of a 196-Unit High Rise Apartment 45
11. Photovoitaic Concentrator Systems on High Rise Apartments 46
12. Heat-Engine Systems 47
13. Buildings in the Community of 30,000.....46
14. Levelized Monthly Energy Costs Per Unit for a Community in Albuquerque, N. Mex.. ..49
15. Levelized Monthly Energy Costs Per Unit for a Community in Omaha, Nebr. 50
16. Assumed Conventional Energy Costs for Large industrial Users, 1976 Dollars 51
17. industrial Direct Heat Systems Levelized Monthly Cost 52
18 industrial Cogeneration Systems Levelized Monthty Cost 54

Chapter II

Overview of Onsite Solar Technology and Summary of Economic Analysis

INTRODUCTION

This study examines the cost and performance of a cross-section of onsite solar energy systems designed to meet all or part of the energy requirements of five different categories of energy customers:

—A two-story, single family, detached house with approximately 1,700 square feet of living area.

—A 10-story, 196-unit, high rise apartment building.

—A shopping mall with approximately 300,000 square feet of commercial space.

—A residential community consisting of a mixture of single family houses, townhouses, low rise and high rise apartments, and commercial facilities.

—A series of industrial installations requiring differing amounts of process heat and electricity.

The systems were examined in four U.S. cities— Albuquerque, Boston, Ft. Worth, and Omaha– chosen to represent a range of different climatic conditions (both in terms of the availability of the solar resource and the heating and cooling demands). The cities also represent a spectrum of different electricity and fossil fuel costs; this was important since the cost of energy from conventional sources around the country tended to show greater variation than the amount of available sunlight. The results presented in this chapter are limited to an analysis of the costs of hypothetical systems operating in Albuquerque and Omaha.

The technologies chosen for analysis include devices which supply:

- Hot water for domestic or industrial use;
- High-temperature fluids for industrial-process heat;
- Hot water and space-heating;
- Hot water, space-heating, and air-conditioning;
- Electricity (from solar cells or heat engines); and
- Electricity and thermal energy (using total energy or cogeneration systems).

It was not possible to review the performance of all possible systems for onsite systems designed to meet onsite energy needs with direct solar energy, and it was not possible to optimize the performance of the systems selected. The analysis presented here is intended only to establish the credibility of different proposals and to make broad comparisons between competing concepts.

This chapter only summarizes the results of the analysis; a much more complete assessment of the technologies represented is reported in chapters VII l-XI I of this volume. Volume I I presents a much more detailed review of the assumptions made in the study, the methodology employed, and reports the results of analysis of a much larger number of cases than can be summarized here.

METHODOLOGY

While the cost of different energy sources can be compared in a number of different ways, the comparisons presented here were all made by computing the average monthly bill paid by the ultimate consumer of the energy. This consumer might be the owner of a single family house, a tenant in a high rise apartment, or an individual purchasing a product or service from a commercial or manufacturing facility. These calculations were made as follows:

1. Systems were compared on the basis of their ability to meet the same set of final or "end-use" demands for energy. In the case of a single family house, for example, this means providing energy for domestic hot water, space-conditioning, and electricity for motors and other miscellaneous uses. If the solar energy equipment was unable to meet the demand (or was not designed to meet some of the demands), these energy needs were met by using electricity or fossil fuels from conventional sources. The billing for this conventional energy was made on the basis of actual rates currently charged in the region.

2 All comparisons were made on the basis of "life-cycle" costing methods. This required an estimate of all outlays for operating and maintaining equipment, electricity and fuels purchased, taxes, and major replacements over a selected 30-year period (1 985-201 5), as well as an estimate of the initial cost of the system. Estimates of the electricity and fuel required by the different system designs were obtained by using a computer model capable of calculating the energy needed by each building type for each hour of the year (described in detail in volume ı I). When solar devices were used, the computer model also provided hourly estimates of the amount of solar energy available. The analysis was based on weather data taken in the four cities in 1962 (1963 for Boston).

An accurate estimate of lifecycle costs cannot be made by simply adding up all of the outlays made during the 30-year interval chosen for comparison. A dollar spent in the 30th year will not be as important to the owner of the system as a dollar spent during the first year of the system's operation —since, in principle, the payment required in the 30th year could be met in the first year of operation by investing an amount much smaller than a dollar in an account earning compound interest. Cost comparisons were therefore made by comparing the "present value" of all expenditures, where present value is defined to be the amount which, if invested at interest in the first year of a system's operation, would be able to meet all cash requirements for energy (including the initial cost of the system). Since each owner will have access to different types of investments, a different effective interest rate must be used to compute the present value of outlays for each owner.

3. It was assumed that consumers compare costs on the basis of the "present value" of their energy-related payments and expect to earn a 10-percent return (after taxes) on all investments. Payments consumers made were estimated by computing the charges which would be levied assuming the utilities or apartment building owners earned the same rate of return on their energy investments that they earn on other types of investments.

Using this method of comparing consumer costs, of course, does not imply that consumers will actually select energy equipment on the basis of such a sophisticated financial analysis. Purchasing decisions are likely to be heav-

ily influenced by first costs, the customer's estimate of a system's reliability and convenience, and the skill with which the item is marketed. No attempt was made, therefore, to anticipate actual consumer behavior. The present value technique is, however, the most accurate technique available for evaluating the real cost of energy, and it could be used to market energy-related equipment in the future. The major uncertainty in the method is the choice of the consumer's expected return on investments,

4. All systems for meeting the fixed set of end uses were compared as integrated systems. This meant, for example, that the performance of solar collectors and the heating and cooling demands of energy required to meet the heating and cooling needs of buildings were computed on an hourly basis assuming that the buildings were operating in a realistic set of climatic conditions.

While computing the cost of many types of solar energy systems is treacherous because of differing estimates of the cost and performance of solar equipment which may become available in the next decade, it also is extremely difficult to establish the cost of conventional energy systems which may be operating during the next few decades. The price of electricity, oil, and gas from conventional sources may change rapidly during the next few years, and the performance of equipment designed to consume energy from these sources may change dramatically as a result. Estimates of the future price of oil, gas, and electricity vary greatly. And no estimate is certain because of such imponderable as the rate of future oil discoveries here and abroad, the stringency of environmental controls, and political decisions made by international energy suppliers. Given the uncertainties about such a critical variable, it was necessary to compare costs using several different forecasts. The three forecasts used for most of the comparisons in this paper are summarized in tables I l-l and 11-2. They include assumptions that:

– The cost of electricity and fossil fuels will increase at the pace of general inflation (5. s percent in this analysis). (This is called "projection (1).")

Table 11-1.—Assumed Residential Fossil Fuel Prices in the Year 2000 (1976 $/kWhJ

	Projection (l)*	Projection (2)	Projection (3)
Natural gas			
Albuquerque	0.0050	0.011	0.016
Boston	0.011	0.024	0.036
Ft. Worth	0.0050	0.011	0.016
Omaha	0.0037	0.0082	0.012
#2 Heating oil			
Albuquerque	0.010	0.014	0.033
Boston	0.010	0.015	0.034
Ft. Worth	N,A.	N.A.	N.A.
Omaha	0.0096	0.013	0.031

. Actual 1976 rates N A = not available

NOTE A fuel price of $001/kWh corresponds to an average monthly fuel bill of about $40/month for a single family house in Albuquerque using fuel for hot water and heating

Table n-2.-Typical Assumed Nonsolar Electricity Rates in the Year 2000 (1976 $/kWh$_e$)

	Projection (1)*	Projection (2)	Projection (3)
Albuquerque			
SF	.0244	.0354	.0802
HR/SC	.0207	.0300	.0680
Boston			
SF	.0440	.0638	.1445
HR/SC	.0557	.0808	.1830
Ft. Worth			
SF	.0269	,0390	.0884
HR/SC	.0294	.0426	.0966
Omaha			
SF	.0248	.0360	.0815
HR/SC	.0217	.0315	.0713

*Actual 1976 rates.

NOTES These average values are representative of the more elaborate electric rates! ruct ure actually used in the computer model

The model used actual utility rates in the region including demand charges and declining block rates when these features applied in the region

SF = prices charged for single family houses using electric heating

HR/SC = average rates charged for high rise apartments and shopping centers Demand charges are included, based on the estimated peak demands of the buildings in each city

An electricity price of $0 02/kWh corresponds to an average electric bill of about $70/month for an all electric house in Albuquerque

– **Energy prices will rise at rates predicted by a Brookhaven National Laboratory (BNL) study. Electricity prices are expected to rise by about 41 percent (in constant dollars) by the year 2000 (to roughly the current marginal cost of electricity from new plants) and gas prices to increase by 123 percent during the same interval. (This is called "projection (2).")**

—**Energy prices will increase by a factor of 3.4 by the year 2000. Under this assumption, the price of oil and gas in most cities would be roughly equal to the price of synthetic fuels. Electricity rates would increase to $0.07 to $0.10/-kWh in all cities examined except Boston, where the price would be somewhat higher. ***

SUMMARY OF SYSTEM COSTS FOR CONVENTIONAL BUILDINGS

The increases in energy prices already experienced, and anticipation of further increases, have accelerated the development of efficient energy-consuming equipment. I n almost all of the cases examined, investments in these energy-conserving devices were more profitable than investments in solar energy equipment, and it is always preferable to make a careful assessment of options for conserving energy before designing solar equipment for a building. Careful control of energy consumption will, of course, reduce the cost of the solar equipment required to meet the remaining load.

The cost of providing energy to single family homes in Albuquerque and Omaha which use different kinds of energy equipment are compared in tables I I-3 and I I-4. In all cases, the costs were computed for the years 1985-2015. (Most of the original equipment is replaced during this period, some of it twice; all of these replacement costs are evaluated in the analysis.) The numbers shown in the tables are the "levelized present value" of monthly energy bills. This "levelized" payment is defined to be the monthly payment which, if made regularly for 30 years, would result in the same present value, from the customer's perspective, as the actual expenditures. The actual expenditures will, of course, vary from year to year. The average monthly payments were displayed because most consumers find estimates of monthly energy payments easier to grasp intuitively. It should be noticed, however, that the average payments are somewhat above those now made in the cities involved, since the levelized costs shown reflect inflation occurring during the period when the system is operating.

Table II-3 shows the levelized monthly energy payments for houses equipped with several different kinds of gas furnaces, electric heaters, and heat pumps now on the market. The table also indicates the payments which would result if the performance of the equipment is improved. Oil and gas furnace efficiencies can be increased with careful design of the burners and by reducing flue temperatures. Hot-water heaters can be made more efficient by adding insulation. The table shows that investments in these improvements are attractive, even if the price of energy remains at 1976 levels (projection (1)).

While the heat-pump systems are less expensive to operate than electric-resistance systems, the benefits of the energy-saving, heat-pump systems are smaller than expected when a careful life-cycle cost analysis is used. This is because the heat pumps are more expensive to purchase initially and the expensive compressor elements of heat pumps typicaliy are replaced every 8 to 10 years. (Analysis in chapter V shows that the comparisons are even less favorable to heat pumps when the real cost of providing power to baseboard and heat-pump systems from conventional electric utilities is com-

'All energy prices cited here and elsewhere in the report are given in 1976 dol lars

Table II-3.—Levelized Monthly Energy Costs for Single Family Houses Not Using Solar Energy*

Standard houses*		Energy projection* (1)	(2)	(3)
Gas furnace, gas hot water, central electric a/c	A	116	173	287
	O	125	180	302
Gas furnace and hot water with improved efficiency, central electric a/c	A	111	160	265
	O	121	169	284
Gas heat, hot water, gas absorption a/c	A	122	187	295
	O	127	188	297
Oil furnace and hot water, central electric a/c	A	179	230	458
	O	204	263	522
Oil furnace and hot water with improved efficiency, central elec. tric a/c	A	163	208	406
	O	186	237	461
Baseboard-resistance heat, electric hot water, window a/c	A	177	238	490
	O	206	277	570
Electric heat pump and electric hot water	A	156	203	395
	O	190	249	490
Improved electric heat pump, electric hot water	A	146-162	187-203	353-367
	O	173	223	424

"System operates from 1985.2015
• • 3 liz.inch.fiberglass Insulation in walls, 6 inches in ceiling
"' "See table II-1
A = Albuquerque O = Omaha

puted – the tables reflect electric rates now charged in the regions.) The performance of heat pumps can be increased by developing better compressors, using multiple compressors, and with other techniques. These improvements can make the heat pump systems more attractive if the cost of the improvements is low, A 50-percent improvement i n heat pump performance is economic if it increases heat pump cost by 20 percent, but may not be if the cost increase is 80 percent.

Table I I-4 indicates the levelized monthly costs which result from adding extra insulation and storm windows and doors to the houses examined in table 11-3. It can be seen that this investment is attractive even if energy prices do not increase in real terms.

Table I I-4 also shows the costs which could be expected from a system that provides all energy needs, including electricity, by burning natural gas. This is a "total-energy" system using a gas-fired heat pump to provide heating and cooling; the engine

Table II-4.—Levelized Monthly Energy Costs for Single Family Houses With Extra Insulation*

		Energy price project ion (1)	(2)	(3) With 20-percent ITC on energy conservation equipment
Gas furnace, gas hot water, central electric a/c	A	106	153	254
	O	111	154	261
Oil furnace and hot water, central electric a/c	A	153	195	380
	O	163	208	402
Baseboard-resistance heat, electric hot water, window a/c	A	149	198	399
	o	159	211	423
Heat pump and electric hot water	A	142	183	350
	0	161	208	399
Gas heat pump and on-site electric generator (using **waste** heat)	A	113	146	173
	O	106	133	157

"System operates from 1985-2015 6-inch fiberglass insulation in walls, 12 inches in ceiling, storm windows, and doors
. ● See table II-1
A = Albuquerque O . Omaha ITC = Investment tax credit.

used to operate the heat pump compressor is also used to generate electricity. Waste heat from the engine's cooling system is used to supply hot water and supplement the heating system. The cost of operating such a system is expected to be very close to the cost of operating an all-electric house.

Table 1 I-5 compares the levelized monthly

Table II-5.—Levelized Monthly Energy Costs Per Unit in a 196-Unit High Rise Apartment*

		Energy price projection* (1)	(2)	(3) With 20-percent ITC on energy conservation equipment
Gas heat, gas hot water, central electric a/c	A	51	71	129
	O	57	76	129
Central electric chiller, fan-coil electric-resistance heaters in each unit, electric-resistance hot water	A	84	113	232
	O	87	113	223
Oil-burning diesel-engine total energy system, using an organic Rankine device as bottoming cycle	A	78	99	108
	O	74	91	101

*System operates from 1985-2015 " "See table II-1
A = Albuquerque O . Omaha ITC = Investment tax credit

costs borne by the tenants of a high rise apartment, assuming that all energy equipment was financed with the rest of the building. It is assumed that capital costs are simply included in the building rent. The advanced system shown in this case assumes the use of a diesel engine, total-energy system, which provides all needed heating, cooling, hot water, and electricity. Heat is received from the engine by placing a boiler in the exhaust of the diesel. Some of this thermal energy is used to operate a low-temperature heat engine when electric demands are high.

TECHNOLOGY OVERVIEW

PASSIVE SOLAR ENERGY SYSTEMS

The techniques just described for conserving energy in buildings can be supplemented by carefully designing buildings to: (1) maximize the amount of solar energy absorbed during winter and (2) minimize the heat absorbed and maximize natural convective cooling during the summer. Such techniques, which have come to be called "passive" solar systems, are principally skillful architecture and landscaping; many of the most attractive techniques were in widespread use in building designs before low-cost energy sources created a situation where buildings were designed without attention to energy consumption.

Energy requirements can be reduced by paying careful attention to the orientation of a building on its lot, the location of trees, the use of awnings or overhangs which permit sunlight to enter a room during the winter but shade the window during the summer cool ing season, and other basic architectural features. Window size and location are particularly important. Large south-facing windows can provide over sO percent of the heating requirements of a room, even in climates with severe winters. Some passive buildings have covered the southern face of the house with a greenhouse. The performance of such systems can be improved by using thick walls and floors to store heat in the building's interior and by using movable insulation, such as shutters which can be adjusted to reflect outside heat or preserve heat in the building interior as needed. Carefully designed interior ventilation can amplify the heating and cooling available from such systems.

These systems may well be able to provide space-conditioning at a price comparable with or lower than the price of solar energy from the active systems examined in greater detail in the remainder of this chapter. It is often difficult, however, to determine the real incremental cost of passive solar equipment. (For example, how does one account for the fact that the addition of a greenhouse may make a building a more pleasant place to live?) While passive systems are usually extremely simple, and the principle of operation easily understood, analysis of their performance is only beginning. This study did not attempt to perform a detailed examination of these systems.

ACTIVE SOLAR SYSTEMS

A Survey of Components

Active solar systems require components which are distinct from the basic building structure. The systems consist of three basic elements:

1 A solar collector exposed directly to the Sun which converts light into a heated fluid or, in the case of solar cells, converts light directly into electricity.

2. An energy-storage system which stores excess energy available during sunny periods for use when direct sunlight is not available.
3. An energy-conversion system which converts the heated fluids into mechanical energy or electricity through a generator using a turbine or piston engine.

Not all solar systems will use storage or energy-conversion equipment.

SOLAR COLLECTORS

The design of attractive, reliable, low-cost collector systems is critical to the future of solar energy since the bulk of the cost of solar systems usually is attributable to the collectors and they are often highly visible. The collectors must cover areas large enough to collect the solar energy required, and these areas can be substantial since, at its peak, sunlight provides only about 1 kilowatt (kW) per square meter. The actual output of a square meter of collector, however, is much less than 1 kW. A typical photovoltaic collector can convert only about 10 percent of the incident sunlight energy into electricity, and the average intensity of sunlight (averaged over all hours of the year – day and night) is typically about one-fifth of the peak solar intensity. As a result, about 50 square meters (540 square feet) of these collectors (connected to an appropriate storage device) are needed to provide a continuous kilowatt of solar electricity. (A continuous kilowatt would keep ten 100-watt light bulbs burning.) Providing this continuous kilowatt, therefore, means that so square meters of some kind of material must be supported and made secure against adverse weather. Thermal collectors, used to provide hot water for heating or other purposes, typically are 2 to 4 times as efficient as the photovoltaic systems just described and require a proportionally smaller area to provide a continuous kilowatt of thermal output.

Two types of collectors are now on the market: nontracking collectors and collectors that follow or track the Sun during the day. Nontracking or flat-plate collectors have no mirror surfaces or moving parts and thus have the advantage of simplicity and reliability. They can be integrated into most architectural styles without being obtrusive. Flat-plate systems can capture "diffuse" sunlight (light reflected from the ground or the clouds), which most focusing collector systems cannot do.

Concentrating collectors that track the Sun can generate much higher temperatures than flat-plate collectors and therefore are more valuable for systems that use heat engines or for some types of industrial processes. They also can provide somewhat more output than flat plates. Few tracking collectors are now on the market, and most are relatively expensive. The potential for savings in production costs is large because they can use thin reflecting surfaces or plastic lenses over most of the area covered. Whether the cost of maintaining the equipment required to keep them pointed toward the Sun offsets the increased output is not now known and cannot be determined without operating experience. Collector alternatives are discussed in greater detail in chapter VII I.

SOLAR ELECTRIC SYSTEMS

Electricity can be generated directly from sunlight in two ways: (1) by heating fluids to operate heat engines (such as steam turbines) that turn electric generators; and (2) by using photovoltaic cells (solar cells) that are solid-state devices made from the same basic materials as transistors. Both approaches can be used to produce electricity alone or to provide both electricity and heat in a "total energy" or "cogeneration" system.

Heat Engines

Heat engines operate by taking a high-temperature fluid (which may be steam or a heated gas) and converting some of the fluid's energy into mechanical power or electricity, cooling the fluid in the process.

The fluid which emerges from the engines can still be quite hot, however, and can be used for space-heating or other applications.

A number of heat engine designs eventually may be used in solar installations, but the small engines now on the market which are compatible with solar energy applications are quite expensive. Small gas and diesel engines cannot be easily used in solar systems since they require heat applied inside a cylinder; most engines designed for solar applications must be able to operate from heat applied to some external surface (e.g., to the boiler of a steam turbine).

Technology is available, however, for designing engines capable of operating from many different kinds of solar-heated fluids. The most straightforward approach is to use a solar collector to produce steam (typically at temperatures between 4000 and 1,0000 F) and use this steam in standard steam turbines or piston engines. The engineering of large steam turbines (100 megawatt and larger) is very advanced, and efficiencies above 40 percent are possible with high-temperature steam. Much less work has been done on smaller steam engines in recent years, however, and designs tend to be somewhat archaic.

The use of steam, of course, means that a high-performance tracking-collector system must be used, and a storage device must be developed which is capable of holding high-temperature thermal energy. It is possible to use much simpler collectors and storage devices with engines designed to operate at lower temperatures. Water is not a desirable working fluid at temperatures below 4000 F (and may not be desirable at temperatures below about 8000 F). Engines analogous to steam engines have been designed which are able to operate from fluids at temperatures as low as 1300 to 1800 F. These engines use freons (similar to the fluid used in refrigerators) or other organic fluids instead of water. The low-temperature systems can be extremely reliable (they are essentially refrigerators working backwards), but their efficiency is low (less than 10 percent if fluids of 1500 F are used), and contemporary devices tend to be bulky and expensive in small sizes.

A number of heat-engine designs also are available which are able to operate at the opposite extreme of temperatures. Brayton-cycle devices, similar to the gas turbines used in aircraft engines, may be practical if collectors can be developed which are capable of producing temperatures of 1,4000 For more at reasonable cost. Such systems will require the use of heliostat fields or other two-axis collectors. Relatively little work has been done on small, high-efficiency, Brayton-cycle devices, however, although several concepts are being pursued in connection with research on gas-powered heat pumps.

Small engines based on the Stirling or the Ericsson cycle may eventually prove to be the most attractive devices if high temperatures are available. These engines may be able to achieve efficiencies as high as 50 to 60 percent at relatively modest cost, but much more development work is required before reliable systems will appear on the market, It is unlikely that any engines based on these two cycles will be available commercially for several years, and they will be quite expensive unless mass produced.

In addition to the systems just described, a large variety of devices capable of converting thermal energy to electrical and mechanical power are in early stages of development. Chapter IX discusses engine cycles in greater detail.

Photovoltaic Systems

Photovoltaic devices, similar to the "solar cells" used to provide power for spacecraft, can convert sunlight directly into electricity with no moving parts. As a result, they can be extremely reliable and quiet. The cells are not as efficient as the best heat engines, but they can compete in efficiency with heat engines at lower temperatures (i. e., 4000 to 5000 F or lower). The main disadvantage of the photovoltaic technology at present is its extremely high cost. While inexpensive heat engines may cost as little as $100

to $200 per kilowatt, photovoltaic systems currently sell for approximately $11,000 per kilowatt. (The photovoltaic systems can provide this peak output only in bright sunlight,) Current Federal research programs have as their goal a cost for photovoltaic arrays of *$2,000* per kilowatt by 1982 and $500 per kilowatt by 1986 (in 1975 dollars). Photovoltaic systems are discussed in detail in chapter X,

There are four basic approaches to achieving a cost reduction for solar cells:

1. Reducing the cost of manufacturing silicon cells, which are the most common photovoltaic devices This requires developing mass-production techniques to replace the inefficient processes now used to fabricate cell arrays, and it will require developing inexpensive techniques for producing and slicing silicon crystals. Silicon is an attractive material because it is plentiful and nontoxic.
2. Developing cells based on "thin films" of materials, such as cadmium sulfide or amorphous silicon, which can be applied directly to glass or other supporting material at very low cost. The main difficulty with the present thin film cells is their relatively low efficiencies. Low efficiencies mean that relatively large areas are required, and the cost of supporting these large areas of cells may exceed the cost of the cells themselves Competitive thin film cells probably will require efficiencies greater than 10 percent.
3. Using concentrating collectors to focus sunlight on photovoltaic cells, thereby reducing the area of cells required for a given energy output. A number of cell designs are being developed which are able to operate in a wide range of solar intensities. Some of these designs are variants of silicon designs, while others are based on gallium arsenide or other materials, The use of concentrating collectors replaces the problem of reducing cell costs with the mechanical problem of designing a focusing collector which can be manufactured at low cost. One feature of the concentratin$_g$ systems is that it may be economically attractive to cool the cells with a fluid and use the heated flu id for space-heating or other processes, thereby taking maximum advantage of the investment in the collector.
4. Using properly designed sheets of plastic or glass imbedded with a fluorescent dye to concentrate sunlight reaching the face of the sheet on the thin edge of the sheet. (Anyone holding a sheet or rod of clear plastic may have noticed how the edge or end sometimes seems to glow.) The use of such a concentrator would eliminate the need to develop a low-cost focusing and tracking system, but there would be a need to find a low-cost dye with the proper optical properties capable of surviving bright sunlight for many years.

During the last few years, a number of techniques have been proposed for using photochemistry to generate hydrogen and other chemicals directly in solar collectors with chemical reactors driven by sunlight, The chemicals produced could then be stored or burned much like natural gas. Several preliminary tests have demonstrated the feasibility of the approach, although the efficiency of current processes is quite low,

ENERGY STORAGE AND BACKUP

The real cost of solar energy technology cannot be evaluated without considering the cost of energy supplied when direct sunlight is not available. The optimum process for maintaining energy availability depends on the relationsip between onsite users and existing utilities and on the eventual cost and performance of various storage technologies. Three basic approaches are possible for providing energy in an onsite solar system during periods when direct solar energy is not available:

- Energy can be generated by using fuel at an onsite facility.

— Electricity can be purchased from electric utilities for backup (and possibly sold to utilities when the output of onsite devices exceeds local demand).

— Energy can be stored in onsite storage devices.

There are several approaches to storing energy at a given site: fluids produced by thermal collectors can be stored directly, for example, and electricity generated by onsite systems can be stored in batteries or other electrical storage systems. It may be desirable to transmit thermal energy, electricity, or chemicals generated in onsite devices to central or regional storage facilities.

The lowest cost systems now available for storing thermal energy at low temperatures (below 2500 F) are simple hot water tanks or bins of heated rocks. These systems are so inexpensive that it will be difficult to find competitive alternatives, Present storage costs in such devices range from *$0.50* to $5 per kilowatt-hour of capacity of the device. Some advanced concepts for storing large amounts of low-temperature energy in underground caverns, aquifers, or porous rock could reduce this cost to $0.10 per kilowatt-hour or less, The somewhat lower efficiency of these large storage systems partially offsets the advantage offered by their low initial cost.

The price advantage of low-temperature storage may make it desirable to store energy during the summer for use during the winter.

High-temperature thermal storage is more expensive. Some types of oil can be used to store energy at temperatures up to about 6000 F for $2 to $5 per kilowatt-hour. Storage at higher temperatures (1 ,4000 to 1,6000 F) costs $3o to $5o per kilowatt-hour.

Electric storage is another option. The only electricity storage systems now commonly used by electric utilities employ hydroelectric facilities, in which water is pumped into an elevated reservoir when demand is low and released to generate electricity when demand is high. Other storage techniques in various stages of development include advanced batteries, flywheels, magnetic storage rings, and compressed air in underground caverns. The only electric-storage systems which are likely to be compatible with onsite solar systems in the near future will use some kind of battery.

The choice between storing energy and providing backup energy from some other source is very sensitive to the cost of storage and fuels. I n many cases, it is more attractive to burn even an expensive fuel for a few hundred hours during the year than it is to provide all backup requirements from onsite storage. Storage equipment is examined in detail in chapter Xl, and the cost of different kinds of backup is discussed in detail in chapter V.

SUMMARY OF COST COMPARISONS

SOLAR HEATING AND HOT WATER

Although installations in four cities were examined in detail, this chapter presents only the results from Omaha and Albuquerque. Omaha was the least favorable location for solar energy systems of any of the cities examined in the study because it receives only average amounts of sunlight and utility electricity and natural gas prices there are relatively low. Albuquerque receives nearly 40 percent more sunlight, but, like Omaha, is below average in rates charged for energy from nonsolar energy sources. Moving from city to city, it is important to notice there is greater variation in the price of electricity than in the amount of sunlight available. Because of this, solar energy is nearly as competitive in Boston (where there is relatively little sunshine but where energy prices are high) as in Albuquerque where the reverse is true.

Solar energy systems designed to provide domestic hot water and space-heating require little more than a simple flat-plate col-

lector and a tank for storing the heated water. Since it is often not desirable to run tapwater through a collector, a "heat exchanger" is typically used to transfer thermal energy from the collectors to the water circulated to the house. Heat can be provided to the building interior by running the solar-heated water through radiators or by circulating the water through coils and blowing air over these coils and subsequently through standard ductwork.

Table II-6 shows the levelized monthly costs for solar systems designed to provide building heating and hot water in Albuquerque and Omaha. (The cost range reflects different estimates of the future price of flat-plate collectors; the higher costs correspond approximately to the price of some equipment which should soon be on the market for new installations. Retrofits will probably be more expensive)

The table also shows the percentage of the building's total energy requirements met by solar energy. (Notice that this is not the fraction of the heating or hot water load met with solar energy, but the fraction of all energy consumed for heating, hot water, lighting, etc.) When electricity is displaced, the primary energy consumed to produce electricity from fossil fuels is computed.

It is clear that solar hot water systems compare favorably with conventional electric systems in both cities, even in cases where no increase in the real cost of energy is assumed, Solar space-heating systems are marginally competitive with the conventional heat-pump systems only if electricity prices rise as forecast by the Brook haven National Laboratory (BNL); they look extremely attractive if prices rise faster than the BNL estimate. The solar devices would, of course, appear more attractive in the case of BNL price forecasts if investment tax credits or other incentives are enacted.

Houses connected together with a thermal-piping system to a central "seasonal-

Table II-6.—Levelized Monthly Energy Costs for Solar Heating and Hot Water Systems*

		Energy price projection ..				
		(1)	(2)	(2) With 20-percent ITC on solar equipment	(3) With 20-percent ITC on solar equipment	Percent solar
Single family houses						
House with electric heat pump and electric hot water (shown for reference)	A	156	203	203	395	0
	O	190	249	249	490	0
Solar hot water	A	141-147	176-182	174-179	316-321	28
	O	184-191	234-241	232-237	437-442	17
Solar heat and hot water	A	158-187	184-213	177-201	284-309	48
	O	201-227	245-271	237-260	416-438	29
Solar heat and hot water (300 houses connected to central ''seasonal" thermal storage tank)	A	165-214	184-234	171-211	249-290	65
	O	215-299	237-321	217-285	307-375	76
High rise apartments (cost per unit)						
All-electric conventional systems (shown for reference)	A	83-84	112-113	112-113	229-232	0
	O	83-87	109-113	109-113	215-223	0
Solar hot water (all-electric backup)	A	84-87	110-114	109-112	218-220	19
	O	85-89	109-113	107-110	203-206	13
Solar heat and hot water (all-electric backup)	A	87-95	113-120	109-115	212-218	31
	O	91-104	111-123	105-114	186-196	26
Solar heat and hot water with seasonal thermal storage	A	57-85	69-97	66-84	116-134	53
	O	92-127	103-137	90-114	134-157	61

*System operates 1985-2015 . "See table II-1
A = Albuquerque O = Omaha ITC = Investment tax credit

storage" facility can be provided with 100 percent of their heat and hot water demands at prices not significantly higher than for isolated solar systems on individual residences. In fact, the seasonal system is less expensive in cases where energy prices are expected to increase sharply.

Table I I-6 also indicates the costs of several heating and hot water systems designed for use in a high rise apartment. The roof area available on the building was not sufficient to support al I of the collectors required by the heating system examined; it was necessary to erect racks over the parking lot for the building to provide the additional collector area required. Use of these racks, of course, added to the cost of the solar-heating system. It would be possible to design a high rise building with much more area for collectors, thereby reducing the cost of solar energy. However, a conventional building design was chosen for analysis so that the costs estimated would apply to a wider range of new and existing structures.

The table also shows the cost of systems capable of providing 100 percent of the heating and hot water needs of the high rise building. In this case, there was no need to connect several buildings to a common storage tank, since the tank for storing thermal energy for the apartment was large enough to achieve the required economies of scale. The tank used in the analysis was assumed to be a commercial steel or concrete tank buried under the parkin, lot. (There is more than enough room for such a tank under the parking lot assumed for the building.)

Table I I-7 compares the cost of solar-heating systems backed up with oil and gas with the cost of conventionI energy sys-

Table n-7.-Solar Heating and Hot Water Systems for Single Family Houses Compared With Conventional Systems Based on Oil and Gas*

	Energy price projection ••				
	(1)	(2)	(2) With 20-percent ITC on solar equipment	(3) With 20-percent ITC on solar equipment	Percent solar
Natural gas used as a backup					
Albuquerque—					
Conventional gas system	116	173	173	287	0
Solar hot water system	121-127	167-173	165-170	268-273	16
Solar heating and hot water system	143-172	172-201	164-188	251-276	41
Omaha—					
Conventional gas system	125	180	180	302	0
Solar hot water system	135-142	185-191	182-188	298-303	10
Solar heating and hot water system	165-191	207-233	199-221	308-330	24
Heating oil used as a backup					
Albuquerque—					
Conventional oil heat	179	230	230	458	0
Solar hot water system	168-173	210-216	207-212	392-396	18
Solar heating and hot water system ($45m^2$)	165-194	193-222	185-209	302-326	45
Omaha—					
Conventional oil heat	204	263	263	522	0
Solar hot water system	202-209	254-261	252-257	480-486	11
Solar heating and hot water system ($40m^2$)	219-244	262-288	255-277	444-466	26

"System operates 1985-2015. •● See table II-1. ITC = Investment tax credit.
NOTE: In all cases, solar systems are backed up with the fuel used by the conventional system used as a reference

terns using these fuels. In Albuquerque, the solar devices will be competitive with both oil and gas, if prices rise along the BNL forecasts, and will be attractive in both cities, if prices rise more rapidly. An increase in gas prices which exceeds the price increases forecast by BN L is clearly possible.

SOLAR AIR-CONDITIONING

Three types of solar cooling were simulated with the computer model:

1. A solar-heated fluid can be used to replace the burner in an absorption air-conditioner similar to conventional air-conditioners operated by burning natural gas.
2. Solar-heated fluids can be used to operate a heat engine connected to the compressor of a standard air-conditioning unit
3. Photovoltaic devices can generate electricity which operates a conventional electric air-conditioner.

Typically, the first two types of solar-cooling systems require fluids at temperatures of 1800 to 3000 F and, as a result, require higher performance collectors than solar heating and hot water systems.

Table II-8 compares the cost of several different conventional and solar approaches to air-conditioning. The results are somewhat difficult to interpret. Solar heating and cooling systems backed up with gas compare favorably with conventional all-electric systems, if BNL price projections are assumed. The solar systems compare favorably with the all-gas conventional systems only if a rapid increase in gas prices is assumed. An investment tax credit for the solar systems, however, could eliminate the cost differences in some locations.

SOLAR ELECTRIC SYSTEMS USING PHOTOVOLTAICS

A simple photovoltaic system can consist of an array of cells connected with an "inverter" capable of converting the direct current produced by the cells into the 60-cycle alternating current which is compatible with electricity provided by electric utilities. (It is possible to use direct current for most lighting, electric stoves, electric heating, and other purposes with little or no modification in the equipment –but a building would need special wiring and switching to use direct current, and this possibility will not be examined in detail.) Onsite storage can be provided using batteries, but it is usually preferable to sell excess electricity to the electric utility rather than storing it onsite, Utility storage tends to be less expensive, and excess onsite energy is typically available during periods when there is a large demand for utility electricity and the excess

Table II-8.—Levelized Monthly Energy Costs for Solar Air-Conditioning and Heating*

		Energy price projection **				
		(1)	(2)	(2) With 20-percent ITC on solar equipment	(3) With 20-percent ITC on solar equipment	Percent solar
Single family houses						
All-electric house with heat pump (for reference)	A	156	203	203	395	0
	O	190	249	249	490	0
House with gas heat, hot water, and absorption gas a/c (for reference)	A	122	187	187	295	0
	O	127	188	188	297	0
Solar heat and solar absorption air-conditioning (gas backup for heat, hot water, and a/c) (64m²)	A	137-165	161-190	153-178	224-248	56
	O	171-211	205-245	194-228	279-313	44

"System operates 1985-2015 " 'See table II-1
A = Albuquerque O = Omaha ITC= Investment tax credit

onsite electricity is particularly valuable to the utility.

As noted previously, a number of difficult legal, regulatory, and rate-setting problems will need to be overcome before onsite systems can be connected to utility grids in most areas. (There should be no prohibitive technical problems.) For the purposes of this chapter, it is assumed that electric utilities purchase power from single family residences at exactly half the rate charged by the utility for power and that utilities buy power from high rise apartment systems at a rate equal to 0.4 times the price the apartments pay for electricity.

Table I I-9 examines a number of flat-plate photovoltaic devices which can be used on the roof of a single family house. It is assumed that a weathertight roof exists under the cell arrays, and that the roof needs no special reinforcement for mounting the arrays. (The General Electric Company has proposed using a photovoltaic array as a shingle and argues that the devices should be given a credit as a roofing material, but no such assumption is used in the calculation presented in the table.) It is assumed that backup electricity is purchased at actual commercial rates (including demand charges) and that utilities are willing to purchase electricity in excess of onsite demands at a rate equal to 50 percent of the price charged for electricity,

The analysis indicates that cells which meet Department of Energy cost goals ($0.50 per peak watt) will be able to compete with conventional systems, if electricity prices increase slightly faster than the

Table II-9.— Flat-Plate Photovoltaic Systems on Houses With Extra Insulation and Storm Windows*

		Energy price projection ••				
		(1)	(2)	(2) With 20-percent ITC on solar equipment	(3) With 20-percent ITC on solar equipment	Percent solar
All-electric house with heat pump (shown for reference)	A	142	183	183	350	0
	O	161	208	208	399	0
Air-cooled silicon arrays ($1/watt)	A	222	249	230	338	52
	O	248	284	265	409	36
Air-cooled silicon arrays ($0.50/watt)	A	170	197	187	294	52
	0	196	231	221	364	36
Air-cooled silicon arrays ($0.50/watt) and 20 kWh onsite batteries	A	190	215	202	303	45
	0	217	251	239	378	32
Air-cooled silicon arrays ($0.50/watt), and heat-engine backup (no electric connection)	A	157	177	164	182	74
	0	161	178	165	182	72
Air-cooled thin-film arrays (7.8-percent efficient, $0.30/watt)	A	148	180	175	306	29
	O	163	199	194	336	32
Air-cooled thin-film arrays (10-percent efficient, $0.10/watt)	A	132	162	159	281	38
	O†	150	183	180	317	37
Air-cooled thin-film arrays (10-percent efficient, $0.10/watt)	A	127	154	151	260	46
	O†	150	183	180	317	37
Air-cooled fluorescent dye concentrator	A	133	150	142	214	90
	O	165	191	181	285	75
Fluorescent dye concentrator, photovoltaic and thermal	A	124	133	123	160	100
	O	165	185	174	256	80

"System operates 19852015 • "See table II 1 †Use Improved heat pumps
A = Albuquerque O . Omaha ITC = Investment tax credit

projection (2) forecast and some kind of investment tax credit is given to the solar system; the solar systems would almost certainly be competitive with the marginal cost of electricity produced from new plants.

The development of 10-percent efficient thin-film arrays costing as little as $0.10 per peak watt would result in systems able to produce electricity at prices somewhat less than the silicon systems. The savings are partially offset by the added cost incurred in supporting and mounting the relatively large arrays of thin-film cells.

Development of an efficient fluorescent dye concentrator system would lead to very significant savings, and systems based on such designs would be able to provide a large fraction of the total energy requirements of buildings with arrays covering the southern roof. Such devices, of course, must be considered extremely speculative at present.

One of the cases examined in table II-9 assumes that the house has no connection to the electric utility grid. It has all of its backup power supplied by a gas-fired heat pump and generator. This system will be competitive with the all-electric systems, even if gas prices increase significantly faster than electricity prices.

Table I I-10 illustrates the cost of flat-plate systems used for apartment buildings. The cost of the electricity from these systems is somewhat higher than in the houses since special racks need to be constructed for supporting the arrays over parking lots. This places an added penalty on low-efficiency systems requiring large collector areas. The advantage of using the cells as a building material, avoiding the cost of supports, is clearly apparent by examining the next-to-last example shown in the table. In this instance, it is assumed that cells are used to cover the southern wall of the apartments. No credit is given for the weatherproofing achieved by the arrays, but the cost of mounting and installing the cells is not charged as a solar-system cost. It can be seen that this application is attractive even though the cells are not mounted at an angle which would maximize their output. The building chosen for analysis again is not well-suited to such applications, since its southern wall can only accommodate cells capable of providing 5 to 6 percent of the total energy needs of the building.

Table 11-11 compares the cost of energy from a variety of different photovoltaic systems mounted on concentrating, tracking arrays. It is assumed that the installed cost of two-axis tracking devices is approximately

Table 11-10.—Flat-Plate Photovoltaic Systems Mounted on the Roof and Over the Parking Lot of a 196-Unit High Rise Apartment .

		Energy price projection**				
		(1)	(2)	(2) With 20-percent ITC on solar equipment	(3) With 20-percent ITC on solar equipment	Percent solar
All-electric system (shown for reference)	A	83-84	112-113	112-113	229-232	0
	O	83-87	109-113	109-113	215-223	0
Air-cooled silicon arrays ($1/watt)	A	149	173	153	254	36
	O	131	153	137	225	19
Air-cooled silicon arrays ($0.50/watt)	A	115	140	129	229	36
	O	105	127	118	206	19
Air-cooled thin film (10-percent efficient, $0.10/watt) mounted vertically on southern wall of building	A	84	112	111	223	6.3
	O	83	108	107	207	4.9
Air-cooled thin film (10-percent efficient, $0.10/watt)	A	95	120	115	219	25
	O	91	113	109	201	15

*System operates 1985-2015. **See table II-1.
A = Albuquerque O = Omaha ITC = Investment tax credit

Table II.11 .—Photovoltaic Concentrator Systems on High Rise Apartments*

		Energy price projection ••				
		(1)	(2)	(2)With 20-percent ITC on solar equipment	(3)With 20-percent ITC on solar equipment	Percent solar
All-electric system (shown for reference)	A	**83-84**	112-113	112-113	229-232	0
	O	**83-87**	109-113	109-113	215-223	0
One-axis tracking unit with silicon cells (near term)	A	164	188	164	261	**63**
	O	154	170	147	213	41
Two-axis tracking unit with silicon cells, cogeneration (near term)	A	95	120	114	214	37
	O	109	125	113	178	42
Two-axis tracking unit with GaAs cells (low cost)	A	**85**	**100**	**92**	153	**75**
	O	**99**	104	**88**	108	**82**
Two-axis tracking unit with 40-percent efficient cell	A	103	**123**	113	192	100
	O	106	**112**	92	117	**86**
Two-axis tracking unit with 40-percent efficient cell, diesel total-energy system for backup	A	**81**	**92**	78	**88**	**79**
	O	76	**87**	75	**85**	72
Two-axis tracking unit with GaAs cells, 100-percent solar system with seasonal electric storage (low-cost iron-REDOX batteries) and no backup	A	114	114	**92**	**92**	**100**
	O	218	218	**176**	**176**	100

● System operates 1985-2015. .● See table 11-1.
A = Albuquerque O = Omaha ITC = Investment tax credit.

$16/ft.2 The cogeneration systems are somewhat more attractive than the flat-plate systems, even though the collectors are more expensive, because a much higher net efficiency is achieved from the collectors (both thermal and electrical energy is produced). In cogeneration applications, the very high efficiency cells do not show major advantages over the lower efficiency devices — they produce the wrong ratio of electric to thermal output for the building chosen for study and excess electricity is sold at a low rate.

Systems capable of providing electricity and 100 percent of the heating and hot water requirements of the building compare favorably with conventional systems in several cases. The system designed to provide 100 percent of the building's energy needs from the solar equipment is competitive only if electricity prices increase relatively rapidly. The 100-percent solar systems shown here must be considered rather speculative, however, since it has been assumed that electric storage costs only $11/kWh – a price which may be possible, if the advanced iron-REDOX battery is developed.

It must also be recognized that the economics of the 100-percent solar system probably could be improved considerably, if more care were taken to optimize the system —by examining the detailed tradeoffs between collector sizes and the size of thermal and electrical storage devices installed. Finally, the 100-percent solar systems require collector areas too large to fit on a typical high rise parking lot.

SOLAR ELECTRIC SYSTEMS USING HEAT ENGINES

Solar electric systems using heat engines tend to be somewhat more complex than photovoltaic systems and impose a more difficult set of design decisions. The high-temperature fluids produced by the collector systems can be stored for later use in the engine, the engines can have one or more stages, heat can be extracted from the engine at different temperatures to meet

direct heating requirements, and this relatively low-temperature energy can be stored separately. The electricity produced by the engine generator can be stored in batteries or other onsite storage facilities. Hydrocarbon fuels can be burned to operate the engine when solar heat is not available.

Since it **seemed unlikely that single family homes would be equipped with high-temperature collectors or large tracking dishes, the only heat-engine system examined for these buildings involved the use of a one-axis tracking system capable of producing hot oil at** *4000* **F. Table II-12 indicates that such a system could be attractive only if electricity prices rise relatively rapidly.**

Several more ambitious systems were examined for use with high rise apartments and other building types. An organic Rankine-cycle system capable of meeting 100 percent of the energy requirements of the building appears attractive only if thermal-energy storage is very low in cost (less than $0.10/kWh) and electricity prices rise rapid-

Table II-12.—Heat-Engine Systems*

		Energy price projection*.				
		(1)	(2)	(2) With 20-percent ITC on solar equipment	(3)With 20-percent ITC on solar equipment	Percent solar
Systems designed for use on a well-insulated family house						
House with gas heat, hot water, and absorption air-conditioner (shown for reference)	A	110	163	163	**260**	0
	O	111	158	158	**254**	0
One-axis tracking system with organic Rankine engine, low-temperature thermal storage only (Albuquerque)	A	184	218	203	**235**	42
One-axis tracking system with high-temperature thermal storage	A	183	203	**185**	**203**	68
	O	244	276	**251**	**280**	33
Systems designed for use on a 196-unit high rise apartment						
All-electric system (shown for reference)	A	83-84	112-113	112-113	**229-232**	0
	O	83-87	109-113	109"113	**215-223**	0
Low-temperature organic Rankine engine with seasonal thermal storage (flat-plate or pond collectors), 100-percent solar	A	130-179	130-179	102-141	**102-141**	100
	O	205-220	205-220	149-177	**149-177**	100
High-temperature Rankine engine (one-axis tracking collectors), fuel backup	O	108	129	115	135	14
Stirling engine system on two-axis tracking collectors (32-percent efficient engine), fuel backup	A	67	77	68	77	72
	O	97	107	94	103	63
Stirling engine system on two-axis tracking collector (47-percent efficient engine), fuel backup	A	56	67	62	72	67
	O	83	92	81	89	67
Stirling engine seasonal storage (high-temperature storage, 47-percent efficient engine)	A	140	140	107	107	100
	O	217	217	166	166	100

"System operates 1985-2015. • "See table 11-1.
A = Albuquerque O = Omaha ITC = Investment tax credit.

ly. The Stirling engine systems probably are the most speculative heat-engine cycles shown here, but are potentially the most attractive. Their performance is roughly analogous to the high-performance photovoltaic systems shown in the previous table.

COMMUNITY ENERGY SYSTEMS

The next cases examined involve systems designed to meet the energy requirements of a residential community of 30,000 persons. The community examined is roughly square — about a mile on a side. The distribution of building types found in the community is summarized in table I 1-13. This table also indicates that about 0.5 km^2 of area is available for solar collectors on southern-facing roofs and parking facilities. Another 0.25 km^2 would be available if all roadways in the community could be covered with collectors. This combined area would be nearly enough to provide all of the energy needs of the community in Albuquerque if high performance engines were used. Lower performance devices and less sunny regions would require significantly more area than is available from the roofs and parking facilities, and roads and special areas would have to be set aside for collector fields. It would be possible to greatly decrease the energy demand in the community if a concerted energy conservation program were implemented.

Table 11-13.—Buildings in the Community of 30,000

	Number Of buildings	Typical area available on southern roofs (m^2)	Area available on roofs and parking lots (m^2)
Single family detached residences	1,864	81,600	81,600
8-unit townhouses	232	75,800	150,000
36-unit low rise apartments	72	48,500	103,400
196-unit high rise apartments	20	20,000	103,000
Shopping center	1	28,800	63,000
Total roof and parking lot area	2,189	254,700	501,000
Total road surface			250,000
Total available surface			751,000

Ground area required for 100-percent solar system in Albuquerque

	Area needed (m^2)
Parabolic dishes/Stirling engines	800,000-1,000,000
Photovoltaic concentrator system (two-axis tracking)	1,400,000-1,800,000
Pond collectors/ORCS engine	1,900,000-2,500,000

As in the previous cases, the different systems are compared on the basis of the charges made to the energy consumers in the community. Three "conventional" communities were selected for reference: (1) a community with a mixture of heating and cooling systems roughly in proportion to the mixture actually occurring in the area being examined; (2) a community in which all buildings are assumed to use electric resistance heating and electric air-conditioning; and (3) a community in which al l single family houses, townhouses, and low rise apartments use heat pumps.

The costs of providing energy to the community from a number of different solar- and conventional-energy systems are compared in tables 11-14 and I i-l 5. Results are shown assuming that the systems are owned and operated by either a municipal utility (which is able to finance the project from tax-exempt bonds) or a privately owned electric utility.

Two conventional cogeneration systems are examined:

1. A diesel-engine system burning gas and using an organic Rankine system operating from the heat in the diesel exhaust to increase the performance of the electric generation when electricity demands are high.
2. A steam cycle burning coal in which hot water is extracted for use in absorption air-conditioners and district heating.

In both cases, energy is distributed throughout the community in two ways — as

Table II-14.— Levelized Monthly Energy Costs Per Unit for a Community in Albuquerque, N. Mex. (Municipal and Private Utility Ownership)

		Energy prices increase to level shown by year 2000 (Gas prices in $/MMBtu; electricity in $/kWh)			
	Percent solar	Gas: $1.46 Elec: $0.0271 (No increase)	Gas: $3.18 Elec: $0.0388	Gas: $3.18 Elec: $0.0388 20-percent solar ITC	Gas: $4.77 Elec: $0.0884 20-percent solar ITC
1977 mixture of buildings	0	**90**	126	126	226
All-electric resistance heat	0	**130**	174	174	357
Heat pumps in most buildings	0	**125**	165	165	325
Diesel/ORCS (gas backup)	54.0	**127 (160)**	140 (173)	132 (164)	93 (225)
Coal steam cogeneration	41.7	**125 (165)**	136 (175)	126 (164)	57 (195)
Solar steam cogeneration	70.1	**150 (203)**	156 (208)	143 (192)	58 (208)
Solar steam total energy with fossil superheat (coal backup)	66.4	144 (193)	150 (199)	37 (184)	55 (202)
Solar Stirling (high efficiency, gas backup)	91.4	146 (196)	149 (198)	37 (184)	148 (195)
Solar Stirling (low efficiency, gas backup)	90.4	157 (207)	159 (210)	47 (195)	160 (207)
100-percent solar, low-temperature ORCS(60 °-170 °,200 °F)	100.0	207 (278)	207 (278)	89 (256)	189 (256)
100-percent solar, low-temperature ORCS (90°-180 °,200 °F)	100.0	252 (338)	252 (338)	230 (311)	230 (311)
100-percent solar, silicon concentrator	100.0	188 (255)	188 (255)	171 (235)	171 (235)
100-percent solar heating, cooling, and hot water, flat-plate collectors	67.0	157 (213)	166 (222)	153 (205)	191 (244)
100-percent solar heating, cooling, and hot water, flat-plate collectors	67.0	128 (172)	138 (181)	127 (168)	165 (207)
100-percent solar hot water and heat-pond collectors	54.7	**140 (175)**	155 (191)	147 (181)	210 (244)
100-percent solar hot water and heat-pond collectors	54.7	**127 (158)**	143 (173)	135 (165)	199 (228)

( ) = Private utility ownership. ITC = Investment tax credit.

electricity and as thermal **energy. Hot and cold fluids are sent to each building for space-conditioning.**

The tables also show the costs of a num-ber of solar systems analogous to those previously discussed **for use in individual buildings. Two systems not previously discussed** are

1. A **system based on a heliostat field and a central receiver which can provide high-temperature steam to a standard steam turbine; and**
2. **A system which uses solar heaters to boil water and a coal boiler to** increase the temperature of the steam to the "superheated" level, which results In **the most efficient steam cycle.**

No easy interpretation of the results is possible. It is apparent that most of the solar systems do not become attractive on a strictly economic basis unless the most gloomy forecast of the price of conventional energy is accepted. with a tax credit or with municipal utility financing, however,

Table 11-15.—Levelized Monthly Energy Costs Per Unit for a Community in Omaha, Nebr. (Municipal and Private Utility Ownership)

		Energy prices increase to level shown by year 2000 (Gas prices in $/MMBtu; electricity in $/kWh)			
	Percent solar	Gas: $1.10 Elec: $0.0229 (No increase)	Gas: $2.39 Elec: $0.0329	Gas: $2.39 Elec: $0.0329 20-percent solar ITC	Gas: $3.59 Elec: $0.0748 20-percent solar ITC
1977 mixture of buildings	0	**98**	**133**	133	**236**
All-electric resistance heat	0	**131**	**174**	174	**351**
Heat pumps widely used	0	**130**	**169**	169	**326**
Central oil heat, electric a/c, grid elec	34.9	127 (152)	**149 (174)**	144 (168)	**237 (261)**
Diesel/ORCS (gas backup)	55.8	134 (170)	**147 (183)**	138 (173)	**197 (232)**
Coal steam cogeneration	**45.5**	139 (183)	**150 (194)**	139 (181)	**173 (215)**
Solar steam cogeneration	**67.7**	188 (253)	**195 (260)**	178 (240)	**198 (260)**
Solar steam cogeneration (fossil superheat)	65.1	177 (238)	**184 (245)**	169 (227)	**191 (248)**
Solar Stirling (high efficiency, gas backup)	87.5	197 (264)	**200 (268)**	184 (248)	**200 (264)**
Solar Stirling (low efficiency, gas backup)	85.8	208 (276)	**212 (280)**	195 (260)	**214 (278)**
100-percent solar, low-temperature ORCS(60°-170°,200° F)	100.0	280 (371)	**280 (371)**	257 (343)	**257 (343)**
100-percent solar, low-temperature ORCS(90°-180°,200°F)	100.0	371 (495)	**371 (495)**	339 (456)	**339 (456)**
100-percent solar, silicon concentrator with minimum collector area	100.0	339 (460)	**339 (460)**	308 (423)	**308 (423)**
100-percent solar, silicon concentrator with extra collector, less battery	100.0	296 (403)	**296 (403)**	268 (370)	**268 (370)**
100-percent solar hot water and heat-pond collectors	60.1	174 (221)	**188 (236)**	177 (222)	**237 (282)**

( ) = Private utility ownership ITC = Investment tax credit.

a number of very large solar systems are able to compete with conventional utility costs in Albuquerque and are surprisingly close to the cost of the conventional cogeneration systems, As expected, the solar systems are somewhat less attractive in Omaha, where the solar energy resource is smaller,

Since the thermal distribution system adds considerably to the cost of all of the community cogeneration systems examined, it is possible that the community chosen for analysis is too large for an optimum solar community system. Much more analysis would be required, however, to determine the optimum size and density of a solar community,

INDUSTRIAL SYSTEMS

The final series of tables examines solar devices used to provide energy for a large industrial plant. It is assumed that the plant requires a constant input of 150 MW of thermal **energy and 30 MW of electric energy throughout the year. The analysis assumes that the factory works on three shifts, but the solar equipment would be more attrac-**

Table 11-16.—Assumed Conventional Energy Costs for Large Industrial Users, 1976 Dollars

		1976 rates, year 2000 rates, projection (1)	Year 2000 rates, energy cost, project ion (2)	Year 2000 rates, energy cost, projection (3)
Electricity ($/kWh$_e$)	A	.01526	.02190	.0499
	O	.01704	.02445	.0557
Natural gas—mils/kWh$_t$ and ($/bbl oil equiv.)	A	**2.696 (4.60)**	**5.869 (10.02)**	**8.811 (15.04)**
	O	**2.365 (4.04)**	**5.149 (8.79)**	**7.729 (13.19)**
Residual Fuel Oil No. 6—mils/kWh$_t$ and ($/bbl)	A	6.335 (10.81)	8.856 (15.12)	20.703 (35.34)
	O	5.474 (9.34)	8.025 (13.70)	17.889 (30.53)
Coal —mils/kWh$_t$ and ($/ton)	A	2.80 (20)	4.42 (31.55)	9.15 (65.36)

A = Albuquerque O . Omaha

tive if it were assumed that the factory was not operated during the night.

In general, it is more difficult for solar energy systems to compete with the price of fuels conventionally used by industry. (Industrial fuel prices are summarized in table 11-16.) Industries can use a wider variety of fuels than residential and commercial customers, and electricity is delivered to industry at "bulk rates" which are usually considerably lower than residential and commercial electric rates The low industrial rates are due principally to the fact that no distribution system is required, billing services are simplified, and large industrial loads tend to be more regular than commercial and residential loads.

The use of solar energy in the industrial and agricultural sectors also is hindered by the high cost of capital used for typical investments in industrial equipment. I n many cases, industries need to finance a large fraction of their new plant investments with equity and expect high rates of return on the investments, Payback times of 1 to 3 years frequently are expected. Widespread industrial use of cogeneration facilities based on conventional fuels also makes it more difficult for solar energy to compete with conventional alternatives.

Three different techniques for financing industrial equipment were examined:

1. **Financing from a conventional industry, assuming that 75 percent of the cost was corporate equity on which a 20-percent return after taxes is expected, and 25 percent financed with bonds;**
2. **Financing from a privately owned utility; and**
3. **Financing from a municipal utility (or from low-interest bonds available from some other source).**

A variety of different direct solar devices can be used to generate hot water for food processing, textiles, washing, and other **industrial and agricultural applications. The cost of operating these systems is compared with the cost of conventional industrial equipment in table 11-17. It can be seen that the least expensive devices are the solar ponds, which may cost as little as** $30/m^2$. **Energy from conventional flat-plate collectors in industrial applications costs more than energy from roof-mounted collectors, since field-mounted systems require foundations, mounting racks, and expensive piping networks,**

Table II-17.—Industrial Direct Heat Systems* Levelized Monthly Cost (millions of dollars)

System type		Energy price projection** (1) Equipment owner: Municipal utility	Private utility	Industry	(2) Equipment owner: Municipal utility	Private utility	Industry	(2) with 20-percent ITC on solar equipment, Equipment owner: Municipal utility	Private utility	Industry	(3) with 20-percent ITC on solar equipment, Equipment owner: Municipal utility	Private utility	Industry	Percent solar
Oil Systems														
Conventional	A	2.19		2.23	2.99		3.03	2.99		3.03	6.55		6.59	0
	O	2.05		2.09	2.80		2.84	2.80		2.84	6.13		6.17	0
Ambient-180°F hot water—pond collectors	A	1.78-2.35	1.93-2.55	2.28-3.02	2.28-3.00	2.43-3.20	2.78-3.66	2.24-2.94	2.38-3.13	2.68-3.54	4.39-5.79	4.54-5.98	4.84-6.38	18-35
	O	2.20-2.62	2.43-2.92	2.95-3.63	2.77-3.25	2.99-3.55	3.51-4.26	2.71-3.17	2.92-3.45	3.37-4.07	5.16-5.91	5.37-6.20	5.82-6.81	17-25
180° F hot water—flat-plate collectors	A	2.36-2.94	2.80-3.62	3.87-5.25	2.85-3.43	3.30-4.12	4.36-5.74	2.73-3.24	3.15-3.90	4.07-5.29	4.87-5.38	5.29-6.03	6.21-7.43	36
	O	3.15-4.06	3.84-5.13	5.49-7.66	3.72-4.63	4.41-5.70	6.06-8.23	3.53-4.34	4.19-5.36	5.61-7.53	6.02-6.82	6.67-7.84	8.09-10.0	24
350° F process heat—one-axis tracking collectors	A	2.50-3.49	2.84-4.24	3.66-6.01	3.08-4.06	3.42-4.81	4.24-6.58	3.00-3.86	3.31-4.57	4.02-6.09	5.54-6.35	5.86-7.05	6.57-8.58	25-27
	O	3.17-6.06	3.78-6.06	5.25-8.99	3.73-5.38	4.34-6.62	5.81-9.56	3.57-5.05	4.15-6.22	5.41-8.74	6.02-7.53	6.60-8.70	7.86-11.2	25
Gas Systems														
Conventional	A	1.30		1.34	2.24		2.28	2.24		2.28	3.86		3.90	0
	O	1.29		1.33	2.17		2.21	2.17		2.21	3.82		3.86	0
Ambient-180° F hot water—pond collectors	A	1.38-1.71	1.53-1.91	1.88-2.38	1.94-2.45	2.09-2.65	2.44-3.12	1.90-2.40	2.04-2.59	2.34-3.00	3.17-3.84	3.31-4.03	3.61-4.44	18-35
	O	1.75-2.06	1.97-2.36	2.49-3.08	2.38-2.78	2.61-3.08	3.13-3.79	2.33-2.70	2.54-2.99	2.99-3.60	3.76-4.21	3.97-4.50	4.42-5.11	17-25
180° F hot water—flat-plate collectors	A	1.96-2.54	2.41-3.23	3.47-4.85	2.51-3.09	2.96-3.78	4.02-5.40	2.40-2.91	2.82-3.56	3.74-4.96	3.66-4.17	4.08-4.82	5.00-6.22	36
	O	2.68-3.59	3.37-4.66	5.02-7.19	3.32-4.23	4.02-5.31	5.67-7.84	3.14-3.95	3.80-4.96	5.22-7.14	4.58-5.39	5.24-6.40	6.66-8.58	24
350° F process heat—one-axis tracking collectors	A	1.96-2.98	2.30-3.72	3.12-5.49	2.62-3.62	2.97-4.37	3.79-6.14	2.53-3.42	2.86-4.13	3.57-5.65	3.90-4.78	4.22-5.48	4.94-7.00	25-27
	O	2.71-4.34	3.32-5.59	4.79-8.52	3.35-4.99	3.96-6.23	5.43-9.17	3.19-4.66	3.77-5.83	5.03-8.35	4.62-6.10	5.20-7.27	6.46-9.79	25
Coal Systems														
Conventional	A	1.47		1.74	2.06		2.33	2.06		2.33	4.08		4.35	0
	O	1.54		1.81	2.15		2.43	2.15		2.43	4.29		4.56	0
Ambient-180° F hot water—pond collectors	A	1.54-1.87	1.74-2.13	2.27-2.78	1.93-2.36	2.14-2.62	2.67-3.27	1.90-2.31	2.10-2.56	2.58-3.14	3.35-4.04	3.55-4.29	4.03-4.87	18-35
	O	1.95-2.28	2.23-2.64	2.93-3.53	2.43-2.81	2.71-3.17	3.41-4.05	2.37-2.73	2.64-2.94	3.27-3.86	4.10-4.59	4.37-4.94	4.99-5.72	17-25
180° F hot water—flat-plate collectors	A	2.12-2.69	2.62-3.44	3.86-5.24	2.51-3.09	3.02-3.84	4.26-5.64	2.39-2.91	2.88-3.62	3.97-5.19	3.84-5.35	4.32-5.06	5.41-6.63	36
	O	2.88-3.79	3.64-4.93	5.46-7.64	3.37-4.28	4.12-5.41	5.95-8.12	3.18-3.99	3.90-5.07	5.50-7.42	4.92-5.73	5.64-6.81	7.24-9.16	24
350° F process heat—one-axis tracking collectors	A	2.12-3.13	2.52-3.94	3.52-5.89	2.57-3.58	2.97-4.38	3.97-6.33	2.48-3.38	2.86-4.14	3.75-5.84	4.09-4.96	4.47-5.73	5.36-7.43	25-27
	O	2.92-4.55	3.59-5.85	5.23-8.96	3.40-5.04	4.07-6.34	5.71-9.45	3.23-4.70	3.87-5.94	5.31-8.63	4.96-6.44	5.60-7.68	7.04-10.3	25

*Conventional systems provide 150 MW_{th} continuously from a fossil boiler and use 30 MW of utility electricity. Solar systems produce only thermal energy, use a fossil boiler for thermal backup, and use 30 MW of utility electricity.

**See table II-16.

A = Albuquerque O = Omaha

The table indicates that the pond systems should be able to produce hot water in Albuquerque at prices competitive with oil, even if oil prices do not increase. Solar heat in the less-favored Omaha climate would start to be competitive in 1985 only if oil prices are expected to increase to $14 to $16 per barrel by the year 2000. Virtually all of the solar hot water systems would be competitive by 1985, if the price of oil is assumed to increase to $30 to $35 per barrel by the year 2000. Municipal utility financing, or some other form of subsidized financing, would make it much easier for industrial solar-energy systems to compete.

If solar hot water systems are to compete with natural gas by 1985, it must be assumed that industrial gas prices will rise by more than a factor of three by the year 2000 (i. e., to the equivalent of $14 to $16/barrel of oil or more). Solar units should be able to compete with the heat generated by burning hydrocarbons made synthetically from coal, but would not be able to compete with direct combustion of coal by 1985— unless the price of coal increased to more than $60 per ton by the year 2000, a price increase which seems unlikely at present.

It must be emphasized that there were few applications where solar energy was competitive with conventional fuels, if the solar equipment was financed with conventional industrial-plant financing. The solar equipment was considered "competitive" if the levelized price, assuming private-utility financing, was equivalent to the levelized price of energy from conventional sources, Low- interest "municipal" utility financing lowers the fuel cost at which the solar systems become competitive.

About 5 percent of U.S. energy is consumed by agricultural and industrial processes at temperatures between 5500 and 2120 F (6.5 percent, if preheat energy is counted.) Relatively simple one-axis tracking Collectors can be used to provide process heat at temperatures as high as *5500* F *(288 'C)* Collectors for this purpose were assumed to cost $80 to $1 40/$m^2$ [not including installation) and, as a result, the solar energy provided at these temperatures costs about twice as much as the solar energy provided by pond collectors at temperatures below 2120 F. Table I 1-17 also indicates the cost of solar energy produced at 3500 F (177 "C). It can be seen that statements made about the competitiveness of direct solar hot water production can be applied to heat produced at this higher temperature, if it is assumed that fuel prices increase about twice as fast as assumed in the previous statements. Since even the low-cost tracking collectors examined cost more per pound than many types of manufactured products, it may well be possible to reduce solar costs below those shown here.

The cost of several different solar cogeneration systems is shown in table I 1-18. Solar cogeneration systems, using small heat engines or photovoltaic devices, may be competitive with conventional fossil systems in roughly the same conditions that solar hot-water systems were shown to be competitive. Presumably, this is because the cogeneration systems are able to provide relatively expensive electricity and more useful energy per unit of collector area.

Three types of solar systems were examined:

1. A two-axis tracking system using a thin plastic lens focusing light on a silicon photovoltaic cell (waste heat is assumed to be collected from each cell at 1800 F and piped to a central storage reservoir).
2. A two-axis tracking frame covered with an array of mirrors focusing on a Stirling engine (waste heat at *3500* F is collected with a piping system).
3. A steam system using a field of mirrors (heliostats) focusing light on a central tower (in this case, the waste heat at 3500 F is available at the tower site).

One difficulty encountered in reviewing the future value of solar-generated heat for industry is that as energy prices increase, industries undoubtedly will find many places where low-temperature heat can be recov-

Table II-18.—Industrial Cogeneration Systems* Levelized Mon h Cost (millions of dollars)

System type		Energy price projection** (1) Equipment owner: Municipal utility	Private utility	Industry	(2) Equipment owner: Municipal utility	Private utility	Industry	(2) with 20-percent ITC on solar equipment: Municipal utility	Private utility	Industry	(3) with 20-percent ITC on solar equipment: Municipal utility	Private utility	Industry	Percent solar
Oil Systems														
Conventional oil boiler, utility electricity	A	2.19		2.23	2.99		3.03	2.99		3.03	6.55		6.59	0
	O	2.05		2.09	2.80		2.84	2.80		2.84	6.13		6.17	0
Oil-fired Stirling cogeneration	A	2.14		2.25	2.77		2.89	2.77		2.89	5.70		5.82	0
	O	1.90		2.02	2.45		2.57	2.45		2.57	4.98		5.10	0
Solar Stirling cogeneration oil backup	A	2.69	3.28	4.68	2.99	3.58	4.98	2.87	3.43	4.68	4.26	4.83	6.08	61
	O	3.62	4.56	6.82	3.91	4.86	7.12	3.69	4.59	6.58	5.05	5.95	7.93	56
Photovoltaic cogeneration, oil boiler and util elec backup	A	2.15-2.56	2.49-3.06	3.29-4.23	2.62-3.03	2.95-3.52	3.75-4.70	2.53-2.90	2.84-3.37	3.54-4.38	4.59-4.97	4.90-5.44	5.60-6.46	45-47
	O	2.69-3.30	3.30-4.38	4.76-6.56	3.08-3.86	3.68-4.78	5.15-6.96	2.91-3.62	3.49-4.48	4.75-6.36	4.97-5.37	5.19-6.24	6.45-8.11	49-52
Gas Systems														
Conventional gas boiler utility electricity	A	1.30		1.34	2.24		2.28	2.24		2.28	3.86		3.90	0
	O	1.29		1.33	2.17		2.21	2.17		2.21	3.82		3.86	0
Gas-fired Stirling cogeneration	A	1.13		1.25	1.92		2.04	1.92		2.04	2.65		2.77	0
	O	1.04		1.16	1.73		1.85	1.73		1.85	2.37		2.49	0
Solar Stirling cogeneration, gas backup	A	2.22	2.80	4.20	2.59	3.18	4.58	2.47	3.03	4.28	2.81	3.38	4.62	61
	O	3.16	4.11	6.36	3.53	4.48	6.73	3.31	4.21	6.20	3.65	4.55	6.54	56
Photovoltaic cogeneration, gas boiler and util elec backup	A	1.66-2.08	1.99-2.58	2.79-3.76	2.20-2.62	2.53-3.12	3.33-4.30	2.11-2.49	2.42-2.96	3.12-3.98	3.07-3.51	3.39-3.98	4.08-5.00	45-47
	O	2.29-3.08	2.90-4.00	4.37-6.28	2.74-3.54	3.35-4.46	4.82-6.64	2.58-3.30	3.16-4.17	4.42-6.04	3.40-4.22	3.98-5.08	5.24-6.96	49-52
Coal Systems														
Conventional coal boiler, utility electricity	A	1.47		1.74	2.06		2.33	2.06		2.33	4.08		4.35	0
	O	1.54		1.81	2.15		2.43	2.15		2.43	4.29		4.56	0
Coal steam cogeneration	A	1.32		1.79	1.80		2.27	1.80		2.27	3.25		3.72	0
Solar steam cogeneration, coal backup	A	2.16	2.75	4.24	2.41	3.00	4.49	2.28	2.85	4.18	3.04	3.61	4.94	61
	O	2.79	3.84	6.02	3.24	4.11	6.28	3.03	3.86	5.78	3.83	4.66	6.58	56
Photovoltaic cogeneration, coal boiler and util elec backup	A	1.81-2.23	2.20-2.79	3.18-4.15	2.16-2.59	2.55-3.14	3.53-4.50	2.07-2.46	2.44-2.99	3.31-4.18	3.26-3.70	3.63-4.23	4.50-5.42	45-47
	O	2.49-3.28	3.16-4.25	4.80-6.61	2.80-3.61	3.47-4.58	5.11-6.94	2.64-3.36	3.28-4.29	4.72-6.34	3.72-4.52	4.35-5.45	5.79-7.50	49-52

*All systems meet a continuous demand of 150 MW_{th} and 30 MW_e. Photovoltaic cogeneration systems supply process heat at 180° F, and all other solar systems provide process heat at 350° F.

**See table II-16.

A = Albuquerque O = Omaha

ered from existing manufacturing **processes at relatively low cost, possibly narrowing the market for solar equipment Conventional cogeneration also will become increasingly attractive as fuel costs rise. Solar cogeneration systems were able to compete with conventional cogeneration systems used in industry In sunny regions only if It was assumed that oil prices increase to more than $1** *6/-* **barrel by the year** *2000* **(the** more **expensive systems required prices near $30/bbl to compete) In less-favored climates, it was necessary to assume that oil prices rose to more than $20 to $25/barrel before solar compared favorably**

It can be seen, therefore, that while a market for solar heat and electricity for industry may develop by the mid- to late-l 980's, the major near-term use of solar energy in these applications is likely to occur in situations where conventional fuels are not readily available or inconvenient to use, or where increased use of these fuels is forbidden by national standards for air and water quality,

Chapter III

FEDERAL POLICY FOR PROMOTING AND REGULATING ONSITE SOLAR ENERGY

Chapter III- FEDERAL POLICY FOR PROMOTING AND REGULATING ONSITE SOLAR ENERGY

Page

A Surveyof Policy Options 61
Policies That Would Increase the Cost of Conventional Energy Sources. 61
Policies That Would Reduce the Net Cost of Producing and/or Purchasing Solar Equipment 61
Research and Development Support. 63
Legal and Regulatory Considerations. 63
Policies That Would Establish Foreign Assistance Programs Involving Solar Technology 64
Programs in Education and Public information. 65
Policy Options From Three Perspectives 65
Perspective. 65
Perpsective B.... 67
Perspective C, ... 73
issues 74
Issue I. Federal Tax Laws. 74
Issue 2. Financing Onsite Solar. 80
issue 3. Solar Installations on Federal Buildings 90
Issue 4. Use of Existing Grant Programs . . . 96
Issue 5. Proprietary Interests vs. Public Dissemination of Information 98
Issue 6. Competition. 99
Issue 7. Consumer Protection 100
Issue 8. Demonstration Programs 101
Issue 9.CoordinationofFederal R&D. 103
Issue l0. Priority Given to Decentralized Soar. 104
Issue ll. Priorities in Solar RD&D 105
Issue 12. DOE Solar Funding 109
Issue 13. SERi 110
Issue 14. Staffing Limitations 111

LIST OF TABLES

TableNo. Page

I. The Effective Cost of Solar Energy in Omaha, Nebr., for 20 Percent Investment Tax Credit [¢/kWh] 72
2. The Effective Cost of Solar Energy in Residential Buildings in Omaha, Nebr., [¢/kWh]WithaHigh Level of Incentives 75
3. Property Tax Rates unselected U.S. Cities 78
4. Authorizing Appropriations for the Energy Research and Development Administration, U.S. House of Representatives, 95th Congress, Conference Report No.95-671 109
5. Authorizing Appropriations for the Energy Research and Development Administration, U.S. House of Representatives, 95th Congress, Conference Report No.95-671 110

LIST OF FIGURES

Figure No. Page

I. Effective Capital Costs as a Function of Investment Tax Credit. 76
2. Effective Capital Costs as a Function of Depreciation Schedules. 77
3. Effective Capital Costs With and Without Property Taxes 79
4. The Effect of Loan-To-Value Ratios on Overall Capital Costs. 82
5. The Effect of interest Rates on Coverall Capital Costs 83
6. Lender Perceptions of Likely impact of Incentive Options on Loan Decisions 85
7. The Effective Cost of Capital to the Government as a Functionof the Discount Rate Used in Decisionmaking 92
8. The Effect of Federal Discount Rate on the Perceived Cost of Federal investments in Three Types of Solar Installations. 93

Chapter III
Federal Policy for Promoting and Regulating Onsite Solar Energy

One of the attractive features of onsite solar energy is that it can be developed and marketed with very little special assistance from Federal or State governments. A small solar industry already exists and the analysis of this paper suggests that a market for unsubsidized equipment may expand rapidly. Solar energy systems are easily compatible with existing institutions: They can be produced by any of a large number of existing industries; financed in conventional ways; built and operated with existing labor skills. Moreover, they will not have a major negative environmental impact. As a result, their introduction will not need to be controlled by an elaborate set of new regulations, legislation, or regulatory agencies—modest adjustments of existing regulations governing conventional heating and cooling equipment should suffice i n most cases. The solar industry may not be able to have a major impact on U.S. energy supplies, however, without coherent and sustained support from Federal and State governments.

Since onsite solar technology will apparently develop without Federal incentives, it might be tempting to conclude that the best policy for the Government to adopt would be no policy at all Existing Federal energy policy, however, will affect onsite solar energy equipment whether or not an attempt is made to develop a specific policy for it. The energy market in which solar technology must compete is highly artificial because of the layers of Federal regulations, controls, and subsidies which have accumulated over the years; energy legislation adopted during the next few years is likely to increase the complexity of these regulations rather than eliminate them. In many ways, current policies acting as disincentives for on site solar equipment include:

- **Policies which maintain the price of residential fuels at artificially low levels;**
- **Policies which permit tax advantages to mining and drilling operations and larger utility-owned generating facilities but which do not provide equivalent subsidies to onsite equipment.**
- **Policies which subsidize research on centralized generating facilities without giving serious support to onsite equipment.**

The fact that these policies have the effect of reducing the cost of fossil and nuclear energy relative to solar energy may be largely inadvertent. They have, however, produced a situation where a decision to make no change in policy translates into a decision to continue disincentives to onsite solar energy.

Without Federal assistance, the fledgling solar industry is likely to grow slowly. Typically, several decades are required before major innovation moves out of a laboratory and becomes a commercially marketable product. In the case of solar products, there are a number of reasons for delay, Consumer concerns about the reliability of the technology, about the resale value of buildings with the equipment attached, and about the possible rapid obsolescence of novel equipment must be allayed. Investors and financial institutions must be convinced that a market of sufficient size exists to justify the investments required for mass production. Installers, architects, code officials, and equipment designers must feel that they have reliable and accurate information about the costs and performance of the equipment and about techniques for evaluating competing designs before they can seriously consider the options offered by a novel technology, Insurance companies must be convinced that risks are acceptable.

As a burgeoning technology, solar energy faces a uniquely difficult marketing problem because it requires a large initial investment; that is, the bulk of the money spent for solar energy goes for purchasing the equipment rather than paying monthly fuel bills. Thus, the attractiveness of solar equipment is generally only apparent if "life cycle costing" techniques are used, but such techniques are currently seldom employed by consumers.

No matter how modest the objectives, developing coherent and useful legislation for onsite solar technology presents a challenging problem. Unlike the Federal programs to develop nuclear fission or fusion reactors where a relatively small number of organizations manufacture or purchase the facilities, development of an adequate policy for stimulating onsite solar equipment will require the Government to assess the needs and preferences of large numbers of groups and individuals, each with its own interests. Units will be built, owned, and operated by individuals and organizations with skills and expectations that cover a wide range. And, because solar technology must be tailored for specific climates, buildings, and energy requirements, incentives must apply to a large variety of different system concepts.

One of the greatest challenges in designing an effective Federal program in this area will be to insure that the programs deal fairly with the diverse group of individuals and organizations that may be affected by the policy. It will be necessary, for example, to find a way to deal equitably with innovations originating from organizations which differ greatly in size. Similarly, it will be necessary to insure that policies designed to affect consumers provide incentives which are accessible to persons with low incomes. (It does little good to provide a low-interest loan or a tax credit to an organization or individual unable to provide the downpay - ment for a solar device.)

There will, of course, be disagreement about the types of legislation needed in regard to onsite solar energy generation since different observers will have different perceptions about the future costs, availability, and acceptability of different energy sources; moreover, different observers will attach different values to the environmental and social benefits which solar energy can offer. While there may be disagreement about the desirability of action, however, there is little doubt that Federal legislation can accelerate the rate at which solar equipment enters the market, if this is judged to be a desirable objective.

By way of caution, however, it must be remembered that the Government has almost no history of intervening in the development of commercial products. While it has a well-established role in supporting basic research and in regulating the impact of new technologies which have become established, it has rarely set about to nurse a specific technology out of the research laboratory and into the marketplace. The one noteworthy example of Federal success in this area is the agricultural extension program which has, on a continuous basis, transformed university-born concepts into routine farming practices, Another possible example is the Federal program to develop a commercial nuclear power program, although many in the industry seem to feel that Federal participation in the program has been at best a mixed blessing.

Most of the products which have reached the commercial market because of Federal development funding have been serendipitous "spinoffs" from projects sponsored by the -Department of Defense or by the National Aeronautics and Space Administration. In these cases, the commercialization process was not a goal of the Federal support program, but rather resulted because the Federal contract enabled the company to develop equipment and expertise needed to meet a commercial application. Some outstanding examples are the transistor industry developed by Texas Instruments and other companies as a result of space and defense requirements and the Boeing 707 jet aircraft which grew out of that company's design of the military KC-1 35.

It is important to recognize that there are dangers associated with overzealous Federal participation in the development of commercial products. A poorly designed program can interfere with the normal development of business relationships, promote inferior products, encourage the wrong enterprises to enter the field, and otherwise distort the development of normal markets. It is certainly possible to find examples where Federal efforts to alter existing market structures have failed. The "operation breakthrough" program, an attempt to reshape the home building industry in the image of the aerospace companies, would almost certainly have been designed very differently if the Government had had an adequate grasp of the real problems faced by builders.

Successfully administering a program for the commercialization of solar technology, with its complex matrix of problems and opportunities, will severely tax Federal bureaucracies accustomed to dealing with small numbers of well-structured projects. An effective program will require imagination, flexibility, and a willingness to try new ideas and live with some mistakes.

A SURVEY OF POLICY OPTIONS

Before turning to a more detailed discussion of the different kinds of incentives available, it may be useful to review the kinds of policy options which have been proposed for promoting and regulating solar energy, and the likely effects of each:

POLICIES THAT WOULD INCREASE THE COST OF CONVENTIONAL ENERGY SOURCES

One of the simplest and most powerful ways to provide incentives to solar equipment would be to increase the cost of conventional fuels. This could be done by (a) removing implicit subsidies, (b) freeing prices from controls, or (c) taxing the energy sources directly. This technique would require virtually *no net* Federal expenses and would require the least Federal involvement in decisions made by the free market. Increasing the cost of conventional energy sources could be justified solely on the basis of the need to conserve those resources which are being rapidly depleted under the current price structure. It could also be justified as an attempt to have prices include such external costs as environmental damage, social disruption, the indirect drain on foreign-exchange resulting from oil imports, and national security risks.

A policy of increasing the cost of conventional energy would clearly not be without problems. Such a policy would create inflationary pressures and the burden would be borne most heavily by people with low incomes unless some compensating mechanism of repayments can be found. Continuing our present course of increasing oil imports, with the attendant balance of payments deficits problems which such policies create, can also be inflationary. It is unclear how long Federal policy will be able to maintain U.S. fuel prices at their current levels while world prices increase rapidly. There is reason to believe that it would be preferable to encourage a gradual increase rather than to find prices growing explosively during a short interval.

POLICIES THAT WOULD REDUCE THE NET COST OF PRODUCING AND/OR PURCHASING SOLAR EQUIPMENT

Policies designed to accomplish this objective fall into four basic categories:

1. Providing financial incentives to poten-

tial owners to encourage them to purchase solar equipment, thereby creating an expanded market and justifying mass production. Techniques for accomplishing this include:

- –Giving income tax credits and allowing accelerated depreciation techniques (see Issue 1). *
- – Removing barriers to obtaining financing for solar equipment (see Issue 2).
- –Encouraging States and municipalities to exempt solar equipment from property taxes and sales taxes (perhaps by providing Federal payments to States in compensation for lost revenues, see Issue 1).
- — Permitting tax exemptions for income derived from loans for solar equipment.
- — Enhancing consumer confidence in equipment by developing a system of unified performance standards by certifying (and perhaps subsidizing) testing laboratories (see Issue 7), and by ensuring proper training for building inspectors.

These incentives could have a significant effect on the perceived cost of solar equipment. One potential problem, however, is that although tax incentives would minimize Government interference in the free market, they could so reduce the risks of purchasing novel equipment that an opportunity would be opened for fraud through the marketing of unreliable systems. This prospect could be diminished by requiring that all who wish to qualify for incentives must purchase only equipment that meets minimum Federal standards. A balance must be found between the desire for a free market and a need for Government oversight.

2. Using Federal purchases of solar devices to stimulate the market by advertising and demonstrating their utility (see Issue 3).
3. Providing direct incentives to manufacturers of solar equipment in one or more of the following ways:
   - — Loan guarantees and loan subsidies.
   - –Tax relief similar to that discussed for equipment purchases (i.e., investment tax credits, or accelerated depreciation allowances).
   - –Cost-sharing through direct grants (see Issue 4).
   - — Encouragement of exports (particularly to developing countries).

Incentives to manufacturers could be extremely useful today, since solar equipment is developing rapidly. Manufacturers are understandably reluctant to invest in production equipment that they feel may soon become obsolete. This reluctance could be reduced considerably if they were permitted to "write-of f" manufacturing equipment over a relatively short period through accelerated depreciation allowances. Another problem for firms attempting to market a new concept, availability of financing, can be particularly troublesome for small companies lacking established relationships with lending institutions.

Designing an effective policy for assisting manufacturers of solar equipment will require overcoming a difficult problem. It is desirable to ensure that the results of federally sponsored development programs are widely disseminated and utilized. If the company performing the research is unable to maintain any proprietary interest in the product developed, however, it may be reluctant to invest in production (see Issue 5).

It will be necessary to ensure that no organization gains monopoly control over crucial areas of the solar industry and to ensure that small businesses are fairly treated (see Issue 6).

4. Providing assistance in developing equipment standards and a testing capability in private testing la boratories..

*These numbers refer to the next section of the report, which is organized around several crucial issues and provides a more complete discussion of these topics

This assistance would be valuable because it could help to alleviate concerns about performance and reliability which have been a major barrier to sales.

RESEARCH AND DEVELOPMENT SUPPORT

Federal support for basic research and development of small solar energy equipment can clearly accelerate the rate at which new types of solar devices reach the market. The investment required to develop most of the onsite equipment considered in this assessment may be consistently smaller than that needed to develop operational systems using synthetic fuels, fusion, or advanced fission reactors. As a result, it should be possible to explore a wider range of small, onsite technologies than if the same amount of funds were invested in developing technology for larger, more centralized equipment. This means that investments can be made in promising, but high-risk projects without committing large amounts of Federal capital.

On the other hand, if the Federal Government does not provide the relatively modest funding required for development of onsite solar equipment, the effect will amount to a disincentive; that is, the current disproportionate Federal research emphasis on nonsolar technologies would place solar equipment at a disadvantage in relation to subsidized energy supplies

LEGAL AND REGULATORY CONSIDERATIONS

Policies Governing the Relationship Between Utilities and Onsite Generating Equipment

The vast majority of all energy consumed in the United States is generated and sold by electric and gas utilities utilizing large, centralized equipment. As a result, State laws and regulations governing the operation of small energy generating equipment are frequently archaic, and sometimes confusing, In some cases, they can present serious barriers to the use of onsite equipment:

- In some States the owner of an apartment building or shopping center would apparently be unable to sell solar-derived energy to clients or customers without filing as a public utility. The procedural complexity of operating as a utility would almost certainly prevent the installation of onsite equipment.
- Laws establishing the right of utilities to own and operate energy generating equipment located in buildings not owned by utilities are frequently unclear.
- There is no well-established procedure for ensuring that utilities will provide backup power for onsite equipment at rates which would be fair to all parties, and there are no procedures governing the rates at which utilities should purchase energy from onsite generating systems during periods when such facilities are generating more energy than is needed onsite. The analysis of the legal aspects of onsite energy equipment which appears in chapter VI of this report indicates that these utility-related problems are the principal legal and regulatory issues likely to require immediate attention.

Policy alternatives for dealing with these issues fall into two categories:

1. Policies designed to clarify the rights of owners of onsite energy equipment Alternatives include:
   - Exemption of onsite equipment from regulation by public utility law (some definition will be required to distInguish "onsite" equipment from conventional utility equipment),
   - Establishment of the right of owners of onsite energy equipment to purchase power from existing utilities at fair rates.

— Establishment of the right of owners of onsite energy equipment to sell energy to electric utilities at fair rates

2. Policies designed to encourage utility ownership of onsite equipment, to perm it flexibility in joint ownership projects, and to clarify the difficulties which might arise if a utility owned or operated equipment located in buildings not owned by the utility.

The techniques available for implementing these utility policies depend critically on whether a statement of Federal jurisdiction in this area, such as the one contained in the proposed National Energy Act of 1977, becomes law. If Congress finds that "the generation, transmission, and sale of electric energy and the transportation and sale of natural gas affect interstate commerce, and that adequate and reliable supplies of electric energy and natural gas are necessary for the general welfare and national security,"[1] the options discussed above can be directly implemented by Federal legislation requiring State utility commissions to impose the regulations and procedures recommended. Otherwise, the Federal Government's power would be limited to persuasion, encouragement, and perhaps the provision of analytical support and guidelines for the recommended policies.

Sunrights

Another area which requires some attention is the issue of "sunlights. " Although there are presently no Federal laws designed to protect the right of an owner of solar equipment to have adequate access to sunlight, the analysis prepared for this study has indicated that probably none will be needed. The Federal Government could, however, facilitate efforts along these lines being made by State and local regulatory bodies. Options include the following:

— States could be encouraged to require new subdivisions, commercial malls, and industrial parks to formulate covenants which will protect the sunrights of al I property owners,

–The Federal Government could subsidize training programs for local planners and zoning officials which would help them to use local regulations more effectively to protect sun rights.

— The Federal Government could encourage States to confirm the rights of individual property owners to negotiate easements guaranteeing light and air, as has already been done in Colorado, and help prepare standard forms and recording procedures,

—A requirement to assess solar energy impacts could be added to the list of factors which must be considered in evaluating federally sponsored or regulated building projects, State governments could be encouraged to follow suit.

POLICIES THAT WOULD ESTABLISH FOREIGN ASSISTANCE PROGRAMS INVOLVING SOLAR TECHNOLOGY

These foreign assistance programs would have the objective of relieving stress on world fuel markets by helping to provide the means to use locally available energy. Such programs could also stimulate an overseas market for onsite solar equipment developed and possibly manufactured in the United States. Options for Federal policy include:

– Ensuring that onsite solar energy technologies be included in programs for foreign economic assistance whenever appropriate,

—Subsidizing the training of foreign nations in the skills needed to design, manufacture, and install solar equipment.

—Augmenting the funds available to international lending institutions for loans related to solar energy equipment.

[1] Proposed National Energy Act of 1977, Sectlon 501 (a)

–Providing a continuing international flow of information about products, technical developments, analytical work, and other progress made in solar equipment.

—Tailoring the U.S. research program to maximize its usefulness internationally whenever this is possible. (For example, if a choice between a complex and a simple approach is difficult. The decision may be tilted in the direction of developing a simple system, if international needs are considered.)

PROGRAMS IN EDUCATION AND PUBLIC IN FORMATION

One of the barriers to the introduction of onsite equipment is the shortage of architects, builders, system designers, installers, and operators familiar with the practical problems and advantages of the equipment. This could be remedied in a variety of ways:

–A program offering federally funded fellowships and scholarships in engineering and architectural programs.

— Federal assistance for midcareer training in the problems of designing energy-efficient buildings and industrial systems for architects, engineering consultants, and other relevant groups. This could be done under the auspices of existing trade associations.

—A program subsidizing labor union training programs designed to develop additional skills needed to install and operate on site energy equipment.

Another problem is the fact that most potential customers for onsite equipment will not consider it as a serious alternative when making purchasing decisions simply because they are unfamiliar with the approach. This could be remedied to some extent with programs designed to bring life cycle costing to the attention of prospective buyers (possibly through the auspices of lending institutions). It might also be useful to conduct brief training programs for professionals in a position to affect the decisions made by their organizations about building designs and the purchase of energy-related equipment,

POLICY OPTIONS FROM THREE PERSPECTIVES

Selection of a specific set of policies from the catalog of options just discussed is not an easy process since such decisions must be made without the comfort of confident forecasts about the long-term costs of solar or any other energy technology. Moreover, political judgments must be made about the ultimate value of the potential benefits of solar equipment which cannot be evaluated in conventional economic terms. The following section discusses three different perspectives on these issues, and presents groups of specific policies which might be chosen to meet each objective.

PERSPECTIVE A

It is sometimes argued that the Nation's energy requirements can be met, at least for the next several decades, by gas, coal, and nuclear sources — and without dramatic cost increases, a dangerously high proportion of imports, or unacceptable environmental risks. Adherents of this position believe that these sources will last until their use is superseded by a new technology — fusion being the most commonly mentioned. It is assumed that this *new* technology will provide energy at prices very close (in constant dollars) to those charged for electricity today. In this view, solar energy would play only a minimal role; indeed, its only function would be to serve as a kind of insurance against the failure of fusion to develop into a usable technology.

From this perspective, it is logical that Federal policies concerning solar energy

should be limited to: (a) those designed to eliminate obstacles to development and use of the technology, and (b) those providing for basic research. Such research would be of a comparatively low priority and could not be expected to have an impact on the commercial energy market for many years. The resources committed to the effort would be relatively modest.

In more specific terms, the following policies would appear to be consistent with Perspective A.

POLICY OPTIONS FOR PERSPECTIVE A

Incentives for Owners of Buildings

1. Amend the National Housing Act to make it clear that Federal Housing Administration (F HA) insurance can be given to solar energy projects under Title I (for retrofit of solar devices and for mobile homes) and under 203b (for new construction).
2. Amend the Federal Home Loan Mortgage Corporation Act (FHLMCA) so that the Federal National Mortgage Association will be empowered to provide a secondary market for mortgages and loans covering onsite solar energy equipment.
3. Amend the National Housing Act to permit Federal Housing Administration Title I funds to be used as second mortgages associated with Farmers Home Administration (FmHA) loan guarantees.
4. Provide funds to ensure that techniques for measuring the performance of collector and storage systems are developed by the National Bureau of Standards or its designers and that these techniques are rapidly communicated to private testing laboratories.
5. Require that all collectors and onsite storage systems sold be accompanied by literature clearly showing the equipment's standardized performance characteristics as measured by reputable laboratories.

Programs to Provide Information About Solar Equipment and Education Programs for Designers and Installers

1. Require that any energy audits conducted of Federal buildings, and any standards established for Federal purchase and rental, include an analysis of the potential contribution of solar energy equipment for heating, cooling, and cogeneration.
2. Require similar energy audits of all housing and building projects which receive any Federal assistance or which are under the jurisdiction of Federal agencies (this would include public housing, housing repossessed under defaults in FHA, Veterans Administration (VA), and FmHA loan guarantee and insurance program s,)
3. Provide midcareer training for public officials in a position to make judgments about building designs and energy-related equipment for Federal buildings. Such training would familiarize them with solar technologies, design alternatives, and techniques for evaluating their economic merit.
4. Subsidize midcareer training programs for architects, engineers, and interested builders.
5. Establish a university fellowhsip and scholarship program which would provide training in areas of science and engineering relevant to solar energy development programs.
6. Develop standards for emerging solar equipment and certify testing laboratories.

Research and Development

From this perspective, the most profitable strategy would be to fund a number of basic research projects, looking for ways to dramatically reduce costs or improve the performance of solar equipment. An orderly procedure would be developed to test the many advanced concepts which have been

proposed before making any decision about large-scale demonstrations.

Analysis of Policy Options Above

1. **Effectiveness.** – These policy options have limited objectives. They would remove obvious impediments to wider use of solar technology, but they would not greatly accelerate the rate at which solar equipment enters the market. Commercial markets could well overtake federally sponsored efforts.
2. **Cost.**– Since most of the elements of this policy are regulatory in nature, the proposals would cost very little. The only direct expense involved would be for energy analyses of buildings (investments which should be cost-effective) and training programs.

PERSPECTIVE B

A second view holds that the future price and availability of all nonsolar fuel sources is very uncertain and that solar-based technology holds real promise of playing a major role in supplying energy in the near future. Those who accept this view also believe that the real price of fossil fuels could increase by as much as as a factor of 2 or 3 and electricity prices increase by as much as 50 percent over the next two to three decades and that the price levels for energy produced by such planned nonsolar technologies as fusion may be high enough to make solar technology competitive.

Thus, they feel that solar technology should be treated on an equal basis with all other promising new energy sources. This perspective would require additional Federal action as outlined below.

POLICY OPTIONS FOR PERSPECTIVE B

All of the Policies Discussed Under Perspective A (except as modified below)

Incentives to Stimulate Market

1. All owners would be given an investment tax credit of 20 percent on qualifying solar equipment (including heating, cooling, process heat, heat pumps and other applications requiring mechanical drives, and electric generation). After a 5-year experiment with these incentives, depreciation schedules would revert to standard and tax credits would be reduced to 10 percent. Homeowners and owners of residential apartment buildings, however, would retain the right to use credits and depreciation schedules permitted for industry. Refunds would be made if the credits exceeded tax liability.
2. An easy-to-use computer program would be subsidized to evaluate the effectiveness of a variety of solar hot water, space-heating, cooling, and electric generating systems which may be used on typical building types. The program would be adjusted for each climatic region and would need to be updated annually to maintain current information about costs and performance. Such a program could be developed by the American Society of Heating, Refrigerating, and Air-Conditioning Engineers (ASH RAE) or some other professional society with Department of Energy (DOE) support. It should be flexible enough to reflect local climatic conditions and building costs, and to assess the potential of the equipment when used on a number of typical building types. It should provide practical information about anticipated initial and life-cycle costs, which should be based on a predetermined consumer discount rate (perhaps 10 percent for homeowner-owned units and higher for commercial systems). Life-cycle costing would be based on an assumed rate of increase in conventional energy costs to be established by DOE. The program should be accessible on a time-sharing basis via computer terminal and telephone from as many regions as possi-

ble. It should be made simple to understand, easy to operate, and inexpensive to run.

3. The National Housing Act, the Serviceman's Readjustment Act, and the acts establishing the Federal National Mortgage Association (FNMA), the Federal Home Loan Bank Board, and the Farmers Home Administration could be amended to require that all applications for guarantee, or mortgage insurance, and all mortgages eligible for repurchase by FNMA or the FHLMA be accompanied by a document showing that the building has been reviewed for energy efficiency under an approved procedure which includes assessment of the potential of solar equipment. The Federal analysis program described above could be used for this purpose. This would permit both the prospective borrower and lender to review the current and future costs of supplying energy for the building and to give both parties an opportunity to analyze the value of solar equipment in reducing these costs. It would, in effect, be equivalent to legislation requiring that the efficiency of consumer products be clearly shown whenever the items are sold.

4. All Federal buildings, including defense installations in the United States and abroad, and all buildings operated under Federal auspices (e.g., public housing, repossessed housing) would be reviewed to establish the cost effectiveness of solar equipment. Funds would be provided for retrofit installations wherever cost-effectiveness was established. The Administration should be instructed to determine the circumstances under which existing appropriations to subsidize operating costs of federally owned buildings and buildings operated with Federal subsidies could be diverted to capitalize solar equipment under current legislation and regulations.

5. The Adminstration should be required to examine the following grant programs to determine what funds appropriated in these areas can be used to subsidize the purchase of solar equipment (see Issue 4 for details):

   - –The community development block grants.
   - – Housing rehabilitation programs (Section 21 3).
   - – Homeowner grants (Section 302).
   - — Homeowners incentive demonstration programs (Title IV).
   - — Housing finance interest subsidies.
   - – Funds allocated by the Energy Conservation and Production Act for renewable technologies.
   - –Grants administered for energy conservation by the Administration on Aging (HE W).
   - —Grants administered for energy conservation by the Social Services Administration.
   - — FmHA grants for improving rural homes so that they can meet code requirements.
   - – Grants made under the Public Works and Economic Development Act.
   - –Any other grant programs which the Administration feels might be used to purchase solar equipment.

Incentives for Manufacturers

1. Allow qualifying manufacturers of solar equipment a 20-percent tax credit and 3-year depreciation allowances on machinery used in producing solar energy equipment. These incentives would apply to equipment purchased during the next 5 years.

2 Require the administration to conduct a study that would evaluate the desirability of a variety of alternative cost-sharing programs which would be effective in subsidizing manufacturers' relevant research in solar energy, which could be made available to the public

in some form, and yet at the same time protect the patentability of devices developed in part with private funds.

3. Measure cost sharing in terms of the fraction of a company's total assets which it is willing to make available for Federal cost sharing (instead of requiring small companies to compete directly with larger concerns in total dollars available for cost sharing).
4 Subsidize the development of a computer model which would facilitate the analysis of the detailed performance of a variety of different onsite solar devices attached to realistic building and industrial loads. Ensure that the widest possible group of system designers and engineers have access to the program, (An attempt should be made to ensure that existing work in this area is not duplicated. The Canadian Government, for example, has apparently developed a similar program for use by Canadian designers).

Research, Development, and Demonstration (RD&D)

A balanced program of research, development, and demonstration should be developed and carefully integrated with the requirements of the industries which will manufacture, install, and support the equipment developed. The program should include the following areas:

PASSIVE HEATING AND COOLING

Work needs to be done to design and make instrumented tests of buildings matched to a large variety of climatic conditions Other research topics in this area which would benefit from additional work include:

- Computer simulations of passive building designs.
- Studies of retrofit potential of passive buildings,
- Demonstration of passive facilities for livestock, storage, and other nonresidential application

ACTIVE SPACE-HEATING SYSTEMS AND SOLAR WATER HEATING

A number of advanced collector designs (used both for heating and air-conditioning) remain in preliminary stages of development. Devices include improved plastics for inexpensive collectors, air-inflated collectors, nontracking concentrators, tubular collectors with and without simple concentrators, simple booster devices, one-axis tracking devices using mirrors or lenses, and a variety of other systems.

SOLAR COOLING

Solar cooling is not a commercial technology but a number of different concepts are ready, or nearly ready for demonstration. These include advanced absorption, adsorption, and Rankine cycle devices and integrated total energy systems with fossil fuel used as a backup.

AGRICULTURAL AND INDUSTRIAL PROCESS HEATING

A number of commercial products are available in the lower and intermediate temperature ranges.

Demonstrations in this area should include:

— Drying for agricultural products;

— Desalinization;

– Process water for washing, textiles, paper, food processing, and other low-temperature applications; and

— Irrigation pumping,

Research work would include the development of inexpensive collectors for low (150° to 250° F) temperature, intermediate temperature (250° to 500°F) and high temperature (greater than 5000 F) applications.

THERMAL STORAGE

A variety of techniques have the theoretical potential for providing large amounts of thermal storage at very low cost. Development of such technologies would remove

many of the problems faced in providing backup power for solar energy devices. It should be possible, for example, to build systems capable of providing 100 percent of the heating and hot water requirements of apartment buildings or clusters of houses using large tanks of water (with earth providing the principal insulation), ponds, trenches full of hot rock, aquifer storage of hot water, storage in in-situ rock, and other techniques. Research in more advanced thermal storage systems (multiple tank, salt gradient, phase change, organic and inorganic chemical reaction devices, etc.) is also needed and much work remains incomplete.

SOLAR THERMAL ELECTRIC

work needs to be done on development of collectors, integration of solar devices with end-use equipment, improved heat-transfer systems, receivers, heat engines, and many other components which would increase design flexibility and reduce costs.

Development of low-temperature Rankine engines, high-temperature Stirling and Brayton cycle engines, and improved small steam cycle systems is needed. Research in advanced materials (particularly ceramics) would be useful for both collector and engine designs.

Work on systems integration needs to be done to identify promising concepts in a broad range of potential applications of small and intermediate size.

Research on electric storage systems is a critical factor. Work is needed on a number of advanced lead-acid, high-temperature, aqueous, and REDOX batteries, as well as in mechanical storage concepts such as flywheels, underground pumped hydro, and others. Thermochemical storage systems could greatly reduce the cost of storing and transporting solar energy for use in thermoelectric systems and in direct high-temperature process applications.

PHOTOVOLTAICS

Areas **where research would be useful include:**

–Advanced research on amorphous silicon, thin film materials (e. g., CdS, III-IV heterojunctions, organic substances and dyes), amorphous silicon, polycrystalline silicon, concentrator cells (GAA1As, multifunction cells, high efficiency silicon thermophotovoltaic devices, interdigitated back contact cells, vertical multifunction cells, etc.). Basic research on semiconductor properties of interesting materials.

–Systems analysis and engineering of control systems for practical application, installation problems, mounting racks, cleaning, cogeneration studies and designs, heat exchange designs, plumbing, etc.

–Silicon solar array technology (pilot plant for polysilicon production, full-scale demonstration of advanced crystal growing and slicing machinery, subs idizing design of large-scale fabrication and production facilities, advanced encapsulation, etc),

—Concentrator development (unique problems associated with cell attachment, cogeneration, heat rejection) for a range of concentrators including: dye concentrators, lens, and mirror systems.

DISSEMINATION OF RESULTS

Ensure that results of Federal RD&D programs exploring technology for heat engines, thermal and electric storage, collector designs, and other subsystems which can be **used in onsite solar energy equipment are widely disseminated to the diverse community of institutions and individuals working on onsite solar equipment.**

DEMONSTRATION AND RESEARCH STRATEGY

Develop and propose a program for the demonstration of a comprehensive spectrum of onsite solar energy systems. This would include (but not be limited to) the following:

— A detailed plan for the demonstration of the range of solar thermal and solar

electric facilities from existing simple hot-water and heating systems to larger, more complex, and perhaps more experimental devices

—A systematic program for developing and demonstrating a large number of subsystem technologies which are applicable to small onsite units but which could be enlarged or aggregated for larger systems. For example, concentrating collectors developed for onsite applications could provide valuable information on designs that would be useful in larger facilities Smaller demonstrations would permit a greater variety of technologies to be tried.

– A strategy for identifying intermediate and long-term markets for onsite solar energy systems. The plan should examine a variety of potential applications, the significance of regional variations in climate, energy prices, and other factors.

A fixed sum should be set aside with the single purpose of funding innovative small-scale energy technologies that show promise These monies would be distributed as direct prizes or grants to all types of inventors in typical amounts of $50,000 to $100,000 The selection of these projects should be performed by panels of qualified experts drawn from a broad cross-section of equipment developers and designers, including, among others, independent inventors, manufacturing firm researchers, university engineering and science staffs, consulting engineers, and personnel from Government laboratories Application procedures should be as simple as possible to encourage broad participation; the program should be widely advertised; and winners should be announced with fanfare,

Develop a system to subsidize proposals made by small organization. This might include a procedure by which brief submlssions from qualifylng small businesses would be screened for initial technical merit. Small grants might then be awarded to assist them in developing the proposal.

Underwrite the testing of solar equipment developed by small companies, such testing to be conducted in Federal or private laboratories.

Foreign Assistance

1. Ensure that programs developing priorities for Government-supported research and federally sponsored studies include an assessment of the potential for overseas sales.
2. Encourage the development of skills related to solar energy in developing nations by providing fellowships as a part of an economic assistance program,
3. Encourage and expand joint research ventures with other governments and international organizations engaged in solar energy research.
4. Augment U.S. contributions to international lending institutions with the objective of encouraging onsite solar energy facilities in developing nations.
5. Provide foreign aid in the form of technical assistance for demonstrating onsite solar systems in less-developed countries
6. Any proposal for foreign economic assistance involving energy must consider onsite solar equipment on an equitable basis. Training should be provided for United Nations, Agency for Internation Development, and Peace Corps officials planning such programs. Outside experts in this area should be utilized to facilitate a review of proposals.

Policies Affecting Public Utilities

Assuming that involvement in regulation of public utilities by the Federal Government has been established as a legitlmate activity under the "interstate commerce clause" of the Constitution, the following policies could be established by Federal legislation.

1. No organization which generates less

than 5 MW of thermal or electric energy will be regulated as a public utility unless this status is desired by the organization, In the latter instance, conventional regulatory procedures would apply. The nonregulated organization would be permitted to generate and sell energy to all consumers in its immediate area, without limitations on' the prices charged or income earned. A study should be commissioned to determine if this size threshold should be increased.

2. No organization which generates less than 5 MW of thermal or electric energy shall be required to obtain a certificate of convenience and necessity from local utility regulatory commissions in order to construct a plant (unless it has asked to be regulated under existing utility statutes).
3. The Administration should be instructed to examine the Sherman and Clayton Antitrust Acts and the Public Utility Holding Company Act to determine whether they prevent utilities from owning onsite energy equipment. If they do so, amendments should be proposed which would remove such barriers.
4. Any studies conducted by utilities to determine fair pricing policies for selling electricity and for purchasing electricity from industrial "cogenerators" must be expanded to include an analysis of the costs of supplying backup power to a variety of types of onsite solar electric generating facilities.

Effectiveness

It is always somewhat perilous to forecast the impact of any program for providing tax subsidies since consumer behavior can be unpredictable. Table III-1 indicates the effect of a 20-percent tax credit on the perceived cost of solar energy provided by a variety of different types of solar equipment, assuming that consumers utilize a life cycle costing technique to determine average energy costs. It can be seen that the tax credit would have the effect of reducing the cost of solar energy by 0.5¢ to 3¢/kWh. The more the solar system costs, the greater the tax credit and the greater the effective Federal subsidy. The table also shows the cost of the subsidies to the Government as a result of loss of tax revenues. The direct costs shown, however, significantly overestimate the net cost of the subsidies because extra tax revenues will result from production in-

Table 111-1 .—The Effective Cost of Solar Energy in Omaha, Nebr., for 20 Percent Investment Tax Credit [¢/kWh]

	No incentives	20 percent Investment Tax credit	Direct Federal subsidy •
Solar hot water	2,0- 4.2	1.4-3.3	0.6-0.9
Solar heating and hot water	3.0- 7.7	2.0-6.6	1.0- 1.1
Heating and hot water with seasonal storage	3.8- 6.9	2.5-4.7	1.3-2.2
Solar heating hot water and cooling	6.0	4.0	2.0
Solar Photovoltaic electricity	3.8-11.8	2.8-9.1	1.0-2.7

'This is the effective cost of the subsidy to the Government rellting from the tax revenues because of the tax credits It is calculated assuming that the Government applies a 10 Percent discount rate to future costs (See text)

Assumptions 1985 startup of equipment
The price ranges reflect the cost differences expected in the variety of residential equipment see Volume II Chapter IV

creases by businesses manufacturing and installing solar equipment, and from increased sales in supporting industries, such as the manufacture of glass and primary metals. This revenue would at least partially offset the direct revenues lost because of the credits I t a dollar is spent on solar equipment manufactured in the United States rather than on imported oil, the U.S. gross national product (GNP) could be increased by $2 to $5 Since the average Federal tax revenue per dollar of GNP is about 20 percent, an incentive which encouraged a dollar Investment in solar equipment could yield as much as $().40 to $1.00 in added Federal tax revenue Since this revenue would be obtained close to the time when the subsidy was granted, its "present value" to the Government would be high.

Reducing the price of solar equipment also would be expected to expand sales and thereby encourage the introduction of mass product ion equipment in technologies where such equipment can be used effectively.

PERSPECTIVE C

A third perspective is an extension of the view just discussed (Perspective B). It contends that the cost of energy could soon climb rapidly because of increasing competition for limited supplies. In this view, the virtues of solar energy — notably its benign impact on the environment, its desirable impact on labor, its impact on reducing competition on world energy supplies, its ability to avoid monopoly ownership of energy sources, and its potential for reducing the risks of climatic change and nuclear proliferatlon — merit an aggressive promotional program, even if the technology is not expected to become fully competitive in conventional economic terms.

POLICY OPTIONS FOR PERSPECTIVE C

An example of the policies which would be added under this perspective include:

1. All of the policies discussed under Perspective A and B except as strengthened below.
2. All owners would be given an investment tax credit of 20 percent on qualifying solar equipment (including heating, cooling, process heat, mechanical drive, and electric generating devices) and would be permitted to depreciate solar equipment over a 5-year interval, These incentives would continue until Congress determined that they were no longer required to ensure the competitiveness of solar equipment.
3, The income from all loans made for solar equipment would be exempt from Federal taxation.
4. All manufacturers of solar equipment would be given an investment tax credit of 20 percent on qualifying manufacturing equipment over a period of 5 years. These incentives would continue until Congress determined that they were no longer required to ensure the competitiveness of solar equipment.
5. Federal purchases of onsite solar energy equipment would be required for existing and new Federal buildings constructed with Federal support, in all cases when it could be shown that the technology would be cost-effective based on a low discount rate (e. g., 3 percent) and a high assumed increase in the cost of conventional energy,
6. FHA minimum property standards would be required to include onsite solar equipment whenever an analysis demonstrated that the equipment would be cost-effective on the basis of approved analytical techniques discussed previously. (As a possible variant of this approach there might be a provision for subsidized interest rates to cover the incremental cost of solar equipment.)
7. Utilities would be required to inform all residential and small industrial and commercial customers of the savings

they might realize by installing a variety of different types of onsite solar equipment. The utilities also would be required to provide installers and financing for any projects selected by the owners of the buildings. The utility would be reimbursed with charges added to the owner's bill over a 10-year period. (This is similar to the program for insulating buildings proposed in the National Energy Plan.)

8. The price of electricity would be raised to a rate which reflects the marginal cost of providing electricity from the most recent plant placed online. And the price of oil would be raised to reflect the cost of adding additional oil supplies. The funds generated by the taxes required to do this would be redistributed in the manner proposed by the National Energy Plan.

9 It would be determined that the development of low-cost solar collection, conversion, and storage equipment is a major national priority. An aggressive research and marketing program with ambitious goals for cost reductions and installed capacity would be funded at a rate which would reflect the urgency of the priority given

10, A separate section of the Small Business Administration would be established solely to guarantee loans made for manufacturing equipment used to produce solar equipment.

11. Environmental legislation would be strictly enforced, conventional powerplants held to strict safety standards, and proposals for nuclear waste disposal be subjected to exhaustive examinations.

Research and Development

The development of solar energy equipment under this approach would be aggressively pursued as a major national priority. The basic categories of projects receiving support would be the same as those discussed under Perspective B, but funding would be given to a broad range of projects, marketing programs would be accelerated, and emphasis placed on both near-term and long-term approaches Part of the price of an accelerated program, judged to be acceptable because of the priority given the undertaking, would be an increase in funds wasted on designs which are eventually overtaken by better approaches. Proponents of this point of view argue that if the United States were willing to make a multi bill ion dollar commitment to a project to put man on the moon, a commitment of similar size would be justified to develop safe and reliable solar energy equipment.

Analysis

The incentives discussed in this perspective will, as expected, have a greater effect in reducing the cost of solar energy perceived by solar equipment owners, and will cost the Government more to implement. Table I I I-2 indicates the impact of a group of policies which consist of:

– A 20-percent investment tax credit,

–A 5-year depreciation allowed for all solar equipment, and

– Exemption from property taxes

It can be seen that these credits reduce the effective cost of residential solar energy by 1.5¢ to 6¢/kWh

ISSUES

ISSUE 1

What changes in the Federal tax laws would be the most effective in encouraging private investment in solar equipment?

How much would such policies cost the taxpayers?

The tax laws can provide powerful incentives for the use of solar equipment without

Table ill-2.—The Effective Cost of Solar Energy in Residential Buildings in Omaha, Nebr., [¢/kWh] With a High Level of Incentives

	No Incentives	Incentives*	Direct Federal subsidy**
Solar hot water	2.0- 4.2	0.8-2.0	1.6-2.2
Solar heating and hot water	3.0- 7.7	1.1-4.1	1.9-3,6
Solar heating and hot water with seasonal storage. . .			
Solar heating and hot water with seasonal storage. . .	3.8- 6.9	1.3-2.9	2.5-4.0
Solar heating, cooling, and hot water	6.0	2.2	3.8
Solar photovoltaic electricity	3.8-11.8	1.2-5.7	2.6-6.1

. FullIncentives consist of a 20 percent investment tax credit, an allowed 5 year depreciation schedule, and exemption from property tax

"" This is the effective cost of the subsidy to the Government resulting from the tax revenues because of the tax credits It is calculated assuming that the Government applies a 10 percent discount rate to future costs (See caveat in text)

Assumptions 1985 startup of equipment
See volume II for details of systems analyzed

the need for major Federal intervention in the operations of the free market. Several alternatives are possible:

1. **A direct income tax credit. Such credits would allow the taxpayer to subtract a fixed fraction of the initial installed cost of solar equipment from his income tax Since these credits are deductions from taxes rather than from income, they would apply equally to al l applicants provisions must also be made so this program is fair to low income families who are not now required to file tax returns and to families whose tax credits exceed the taxes they owe The effect of different types of tax credits is illustrated in figure III-1.**

   Under existing laws, tax credits are permitted for some commercial and industrial equiprment, but not for investments in buildings, Nor are they allowed for heatlng, cooling, or other energy-generating equipment i nstalled in buildings However, a company that install such equipment in a building it does not own — and then sells the energy produced –- would probably qualify **for** a **tax credit under present laws**

2. **Accelerated depreciation allowances. Accelerated depreciation allowances would be of greatest interest to corporations, utilities, and individuals in high tax brackets. No individual is presently permitted to depreciate equipment in his own home, although equipment installed in the home by a company which sells energy could depreciate the equipment.**

The effect of different types of depreciation schedules is illustrated in figure ıı I-2, Several observations can be made immediate y:

1. **Permitting a homeowner to depreciate the capital he invested in solar equipment over a period of 3 to 5 years would reduce his effective capital charges by about one-third Since institutional owners of energy-generating equipment are permitted to depreciate their equipment, the current tax policy forbidding homeowners to do this has the effect, if not the intention, of discriminating against the ownership of such equipment by the homeowner. (This incentive would be of greatest benefit to owners in high tax brackets)**

Figure III-1 .— Effective Capital Costs as a Function of Investment Tax Credit

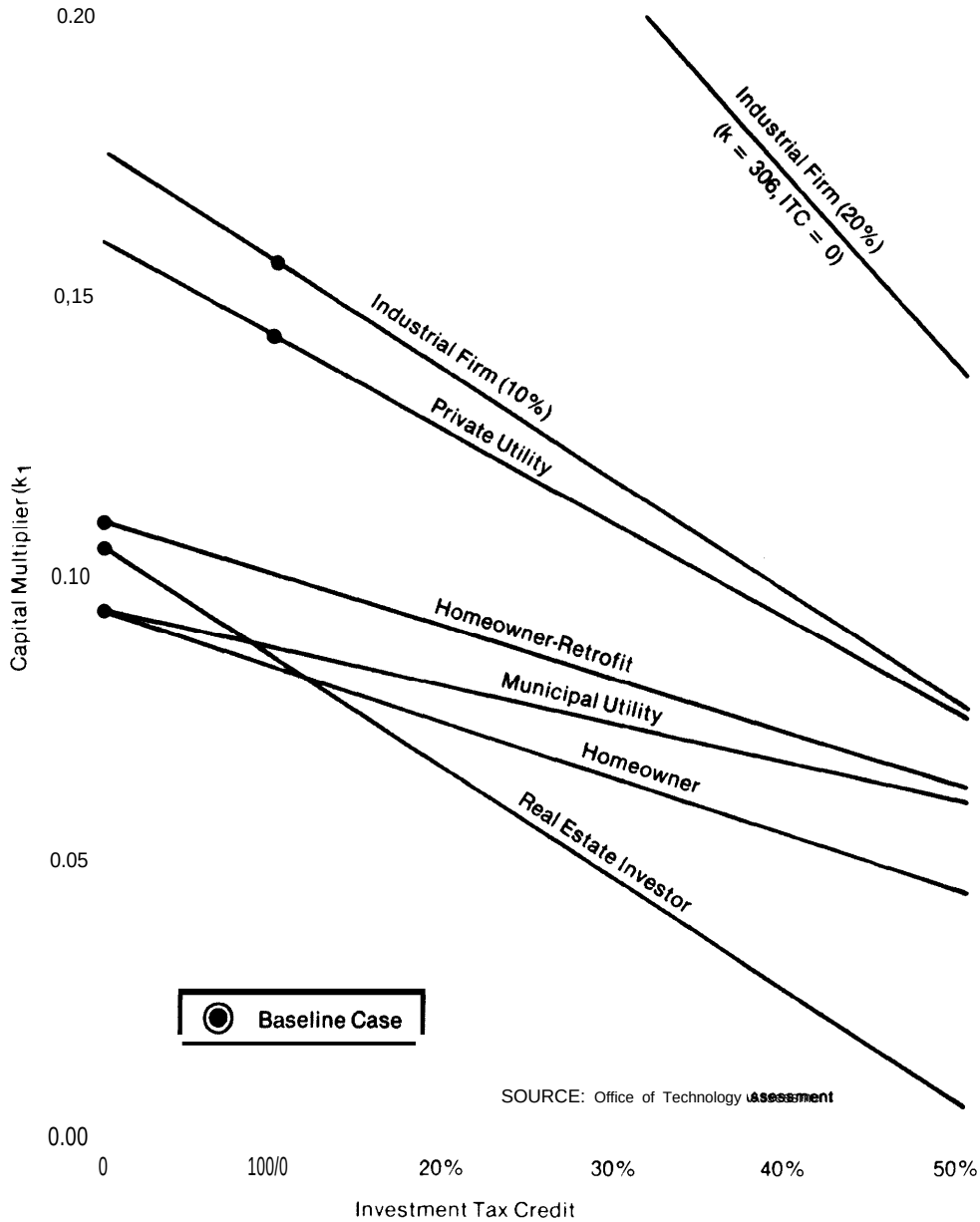

NOTES
(1) The "effective interest rate paid on capital" shown here is the ratio between the capital-related component of the price perceived by the consumer and the total initial installed cost of the energy equipment in question. Capital-related expenses include return on debt, return on equity (unless the equipment is owned by the homeowner), taxes (with allowances for depreciation and other write-offs) and insurance.
(2) The baseline assumptions and the techniques used to compute the data shown on this figure are discussed in detail in the chapter on "Analytical Methods."

Figure III-2.– Effective Capital Costs as a Function of Depreciation Schedules

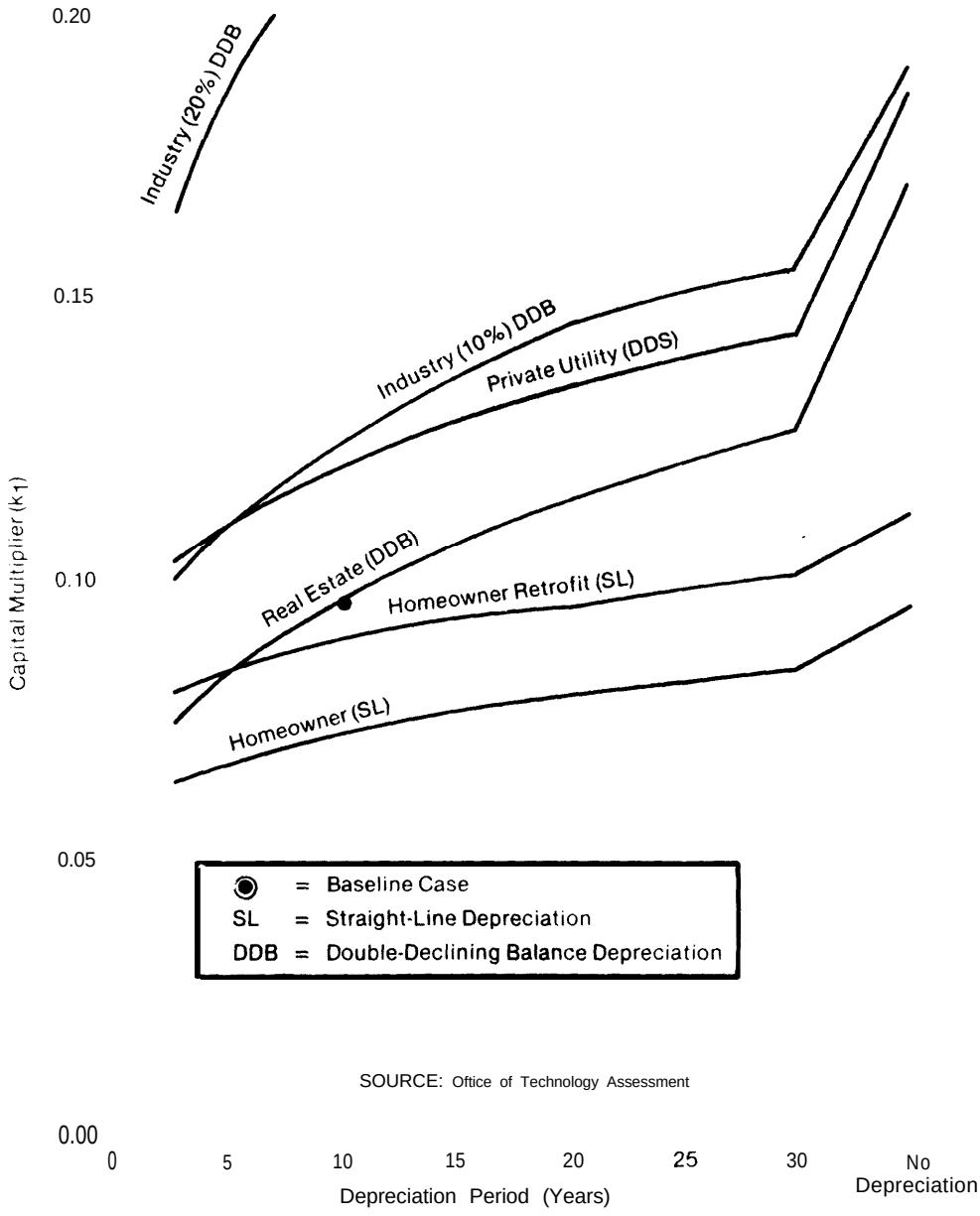

SOURCE: Oftice of Technology Assessment

NOTES

(1) The effective interest rate paid on capital ' shown here is the ratio between the capital related component of the price perceiv ed by the consumer and the total in ıalins talled cOSt of the energy equipmen tin queston Capı la l related ex penses i n llude return on debt return on equity (u n less the equipment is owned by the homeowner) la xes with all owan ces for d epreciation and oth er write offs) and Insurance

(2) The baseline assumptio ns and the fech n iques used to com pute the data shown on th is figu re are di Scussed in detail in the hap ter on Analytical Methods "

2. **Commercial, industrial, and utility owners can also be strongly influenced by altering policies on deductions for depreciation. In the cases shown in figure III-2, real estate investors, who expect a 10-percent return on their capital after taxes can reduce their capital-related costs by over one-third if they are permitted to depreciate equipment rapidly. The effect is even greater for an industrial owner expecting a 20-percent rate of return.**

PROPERTY TAXES

Property taxes can add as much as 10 to 25 percent to the cost of solar energy. The taxes, of course, are imposed entirely by States and municipalities and vary greatly around the country (see table 11 1-3). I n some urban areas in the northeast, for example, taxes are so high that an investment in on-site solar equipment would be prohibitively expensive for many individuals and companies. Figure I I I-3 illustrates the substantial effect of removing a "typical" property tax since, in most cases, the tax increases the effective investment cost by nearly 10 percent.

Some problems may arise concerning the property taxes paid by utilities and other organizations if they own solar equipment. Because in many cases these organizations pay taxes at much higher rates than those paid by individuals, there would be a disincentive to invest in solar equipment. Whether this is desirable must be decided. Another decision is whether to exempt companies which manufacture solar equipment from property taxes. There might also be some confusion about charging the property taxes in a case where a utility or other private concern places equipment on a house or building and charges the building owner for the energy produced.

Property taxes are not imposed by the Federal Government and therefore cannot be removed with Federal legislation. It may be possible to use Federal programs to encourage local governments to remove property taxes, perhaps by agreeing to compensate them in some way for lost revenues attributable to solar property tax exemptions or to penalize States which do not reduce property taxes by withholding Federal solar subsidies. The National Energy Plan proposed by the Administration states that it

Table III-3.—Property Tax Rates in Selected U.S. Cities

Residential Property Tax **Rates in Selected Large Cities: 1974**

City	Effective Tax Rate per $100 Rank	Rate	City	Effective Tax Rate per $100 Rank	Rate
Boston	1	$5.94	New York City	16	$2.18
Buffalo	2	4.31	San Francisco	17	2.13
Milwaukee	3	3.63	Cleveland	18	1 88
Los Angeles	4	3.43	Seattle	19	1.82
San Antonio	5	3.43	St. Louis	20	1.80
Indianapolis	6	3.29	Memphis	21	1 77
Baltimore	7	3,24	Denver	22	1,71
Pittsburgh	8	2.82	Jacksonville	23	1. 69
Philadelphia	9	2.80	New Orleans	24	1,69
Chicago	10	2.75	Kansas City	25	1,57
Detroit	11	2.73	Phoenix	26	1.55
Dallas	12	2.60	Washington, D.C.	27	1.54
Houston	13	2.38	Nashville	28	1 39
Atlanta	14	2.24	Cincinnati	29	1.31
San Diego	15	2.23	Columbus	30	1.17

,– OTA Baseline assumption **$200**

SOURCE: Government of the District of Columbia, Department of Finance and Revenue, *Tax Burdens in Washington D C Compared with Ma/or State and Local Tax Burdens in the Nation's Thirty Largest Cities 1974.*

Figure III-3.— Effective Capital Costs With and Without Property Taxes

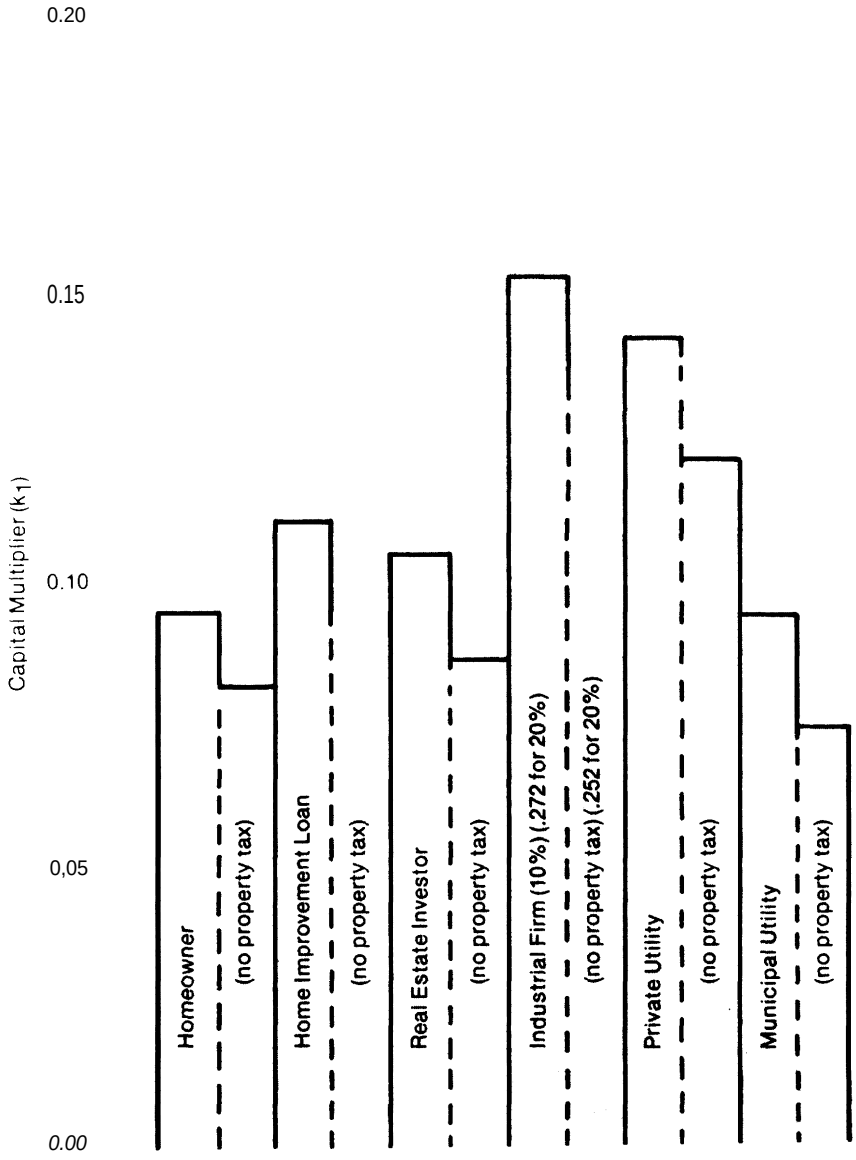

NOTES

(1) The 'effective interest rate paid on capital' shown here is the ratio between the capital related component of the price perceived by the consumer and the total initial installed cost of the energy equipment in question. Capital related expenses include return on debt return on equity (unless the equipment is owned by the homeowner) taxes (with allowances for depreciation and other write offs) and insurance.

(2) The baseline assumptions and the techniques used to compute the data shown in this figure are discussed in detail in the chapter on Analytical Methods.

SOURCE: Office of Technology Assessment

would be desirable for the States to exempt solar devices from property taxes, and several have already done so.[23]

SALES TAXES

Sales taxes also lie beyond the Federal sphere, but they, too, can present an impediment to the installation of solar equipment. Here again, the rates for sales taxes vary from State to State. In Connecticut it is 7 percent, in Nebraska it is 2.5 percent, in New Hampshire there is none.[4] Removing the tax from sales of solar equipment would be of some benefit in reducing initial costs. However, an exemption would not have as great an effect as the property tax exemption which must be paid each year.

The Cost of Tax Incentives to the Government

The cost to the Government of changes in tax policy can be computed from the data in figures II l-l and II l-2 if it assumed that the Government and the private investor use the same discount rate (see volume 11, chapter I). This is done by finding the difference between the "effective cost of capital" which would apply with and without the change in policy. For example, if the effective interest rate paid on capital applied to a real-estate investor is 10.6 percent without a tax credit and 8.6 percent with a 20-percent credit, the average annual loss of revenues to the Government during the life of the equipment is simply 2 percent of the initial cost.

ISSUE 2

Will difficulties in obtaining loans hinder the installation of onsite solar-energy equipment? If so, can Federal authority to regulate the mortgage reduce such problems?

'The National Energy Plan, p 76

'National Bureau of Standards, Survey of State Legislation in Solar Energy

'The World Almanac and Book of Facts 1977, Newspaper Enterprise Association, Inc , Cleveland & New York, p 105

SUMMARY

The short answer to the first question is: probably, at least for a while. Banks and other lending institutions are understandably reluctant to invest in mortgages for residential buildings that plan to use costly new energy equipment with unproven market value, since they might not be able to recover the value of such loans i n a foreclosure sale. They are similarly reluctant to provide funding for commercial and industrial equipment if the owner cannot convince them that the system will produce a favorable cash flow during the period of the loan. Present statistics about the marketability and performance of most types of solar energy equipment are inadequate to support actuarially sound decisions, and few prospective lenders appear to have seen what little information is now available. Although solar devices with proven characteristics can be expected to gain gradual acceptance in the lending industry, the question of whether the Government can or should accelerate this process has not been resolved.

The Government has successfully used loan guarantee and mortgage insurance programs in the past to induce private lending institutions to provide funds for projects deemed socially desirable; Federal Housing Administration (FHA) and Veterans Administration (VA) have made loans available to prospective homebuyers for decades. The Government is also in a position to alter current banking practices through the great variety of regulatory and secondary mortgage institutions which operate under Federal charter, The potential for using these organizations to stimulate loans for solar programs is discussed below,

THE PROBLEM

In the absence of adequate information on the reliability, lifetimes, and marketability of solar equipment, many banks are reluctant to include solar devices in the value of mortgages made on residential buildings. In a recent survey by Regional and Urban Planning Implementation, Inc. (R UP I), 63

percent of the lending institutions interviewed Indicated that they would "exclude the excess cost (of solar equipment) from the appraised value of the house" for loan-making purposes, and an additional 22 percent indicated that they would lower the loan-to-value ratio of the loan. [5] The average loan actually issued by the institutions interviewed covered 55 percent of the value of the solar devices. ' (However, the institutions felt that it solar devices were deemed to be an actuarially sound investment, they would lend funds for the devices at the same rates they charged for other types of building loans.) Most of the solar loans were issued for expensive custom-built homes, and in many cases the owners or builders had an established relationship with the lender. [7]

This reluctance to issue loans for solar devices is accentuated both by the fact that most banks are simply unaware of the informat ion gathered about solar equipment, and by the tact that very few lending institutions take energy costs into account when determining the ability of a prospective borrower to meet mortgage payments.

Most lending institutions do not include an applicant's projected energy bills in an assessment of his ability to meet mortgage payments But this practice is changing. Forty percent of the lending institutions interviewed in the RUPI study indicated that since 1973 energy considerations had influenced lending decisions "a great deal" or had become "critical" in lending decisions, and 50 percent stated that the importance of energy in these decisions would increase.[8] Most banks rely primarily on the principal, interest, taxes, and insurance (PIT I) evaluation technique, which compares a prospective borrower's income before taxes to the PIT I costs which he must bear to support his investment in a home. Since the borrower is equally committed to carrying the energy costs of his home, there has been speculation that the PIT I formula may be expanded to include energy costs (although this is not now a common practice).

Lack of information about home energy consumption and the value of solar equipment makes it difficult for institutions to evaluate energy costs, even if they have a desire to do so. Only 9 percent of the lenders interviewed in the RUPI study had seen estimates of solar energy savings, only 4 percent had seen cost benefit analysis for solar equipment, and only 9 percent had seen an installed solar device or plans for an operational system. [9]

THE EFFECT OF MORTGAGE POLICY ON SOLAR COSTS

The availability of financing can present a major barrier to rapid introduction of solar equipment. The effects of loan-to-value ratios on overall capital costs are shown in figure III-4 and the effect of changing interest rates is shown in figure III-5. The results require some interpretation:

— From the perspective of a present value analysis, the fraction borrowed has relatively little effect on the capital costs perceived by the homeowner, given the assumption that the owner uses a 10-percent discount rate to evaluate future costs. This is because the discount rate chosen in the calculation is close to the interest rate charged for the loan. The fraction borrowed can have a much greater effect than figure III-4 indicates, however, since the requirement for a large downpayment can be a prohibitive barrier.

–The fraction borrowed strongly affects the prices which must be charged by industrial firms and, to a lesser extent, the prices charged by the hypothetical real estate investor. This is simply due to the fact that the investors expect a much

[5] Regional and Urban Planning Implementation Inc (R UP I), Home *Mortgage Lending and Solar Energy,* February 1977, p 13 (Prepared for the Division of Energy, Building Technology and Standards, Office of Policy Development and Research, HUD)

[6] Ibid , p 99

[7] Ibid

[8] RUPI, p 52

[9] RUPI, p 61

Figure ill-4.—The Effect of Loan-To-Value Ratios on Overall Capital Costs

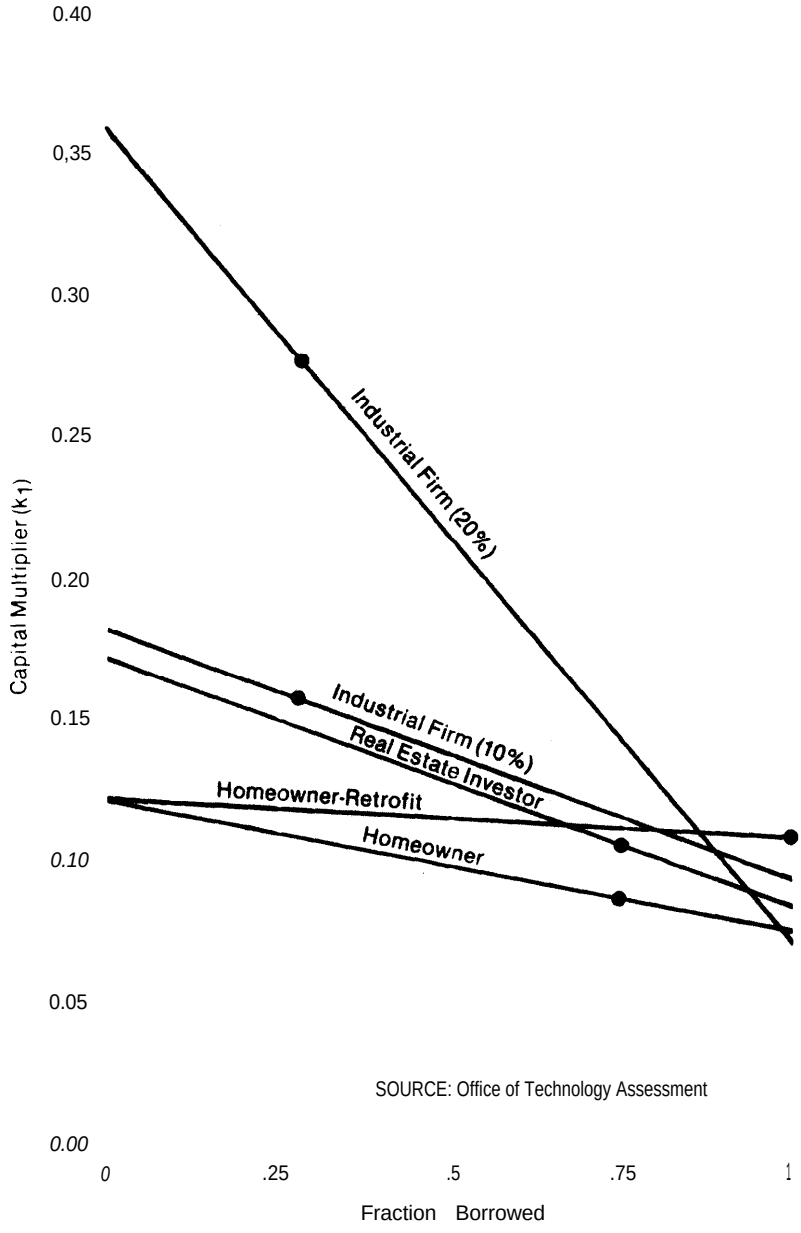

SOURCE: Office of Technology Assessment

P.U. = .142
M.U. = .095

NOTE
The baseline assumptions and the techniques used to compute the data shown on this figure are discussed In detail In the chapter on "Analytical Methods "

Figure ill-5.—The Effect of Interest Rates on Overall Capital Costs

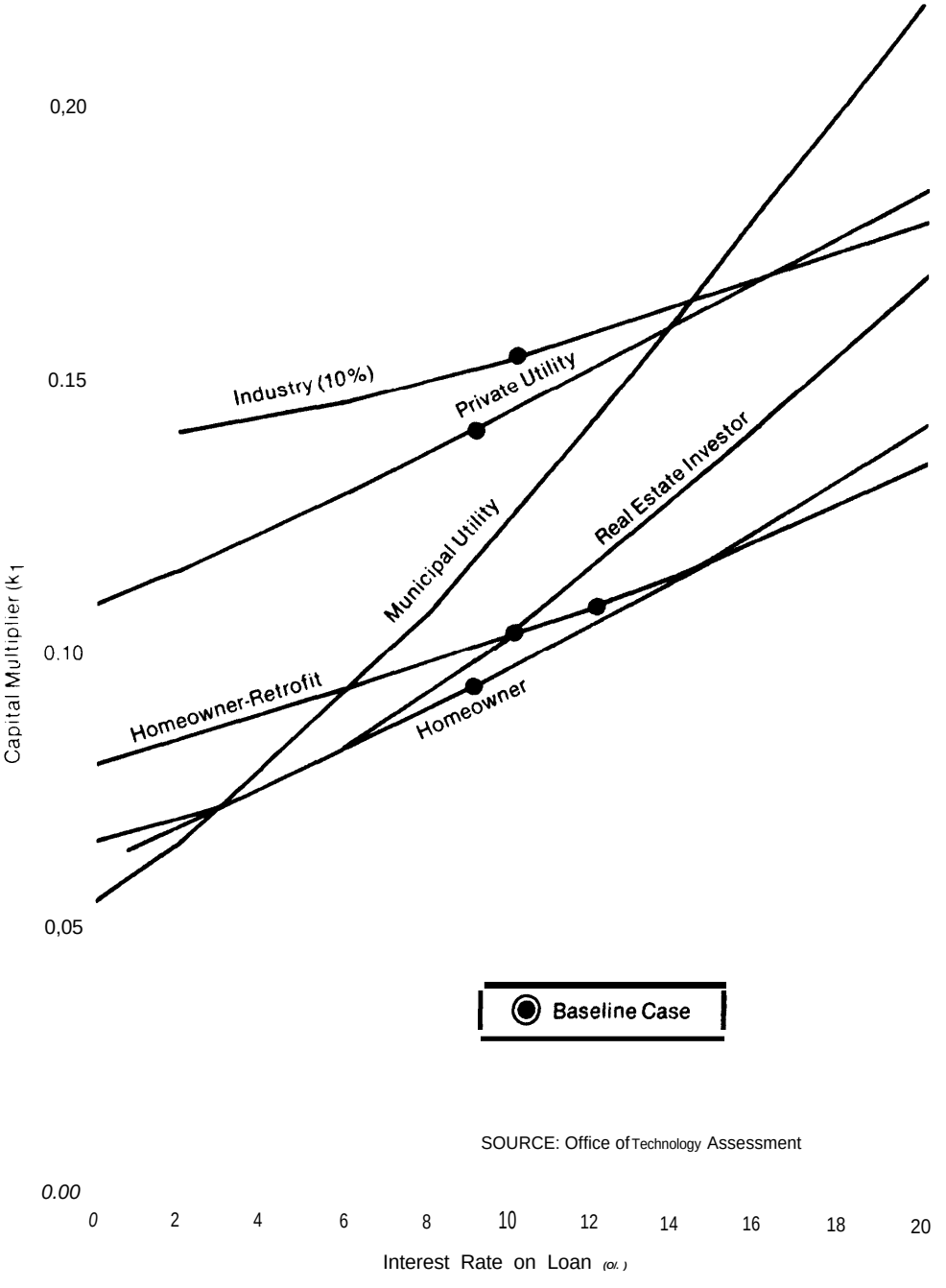

SOURCE: Office of Technology Assessment

NOTES
(1) The "effective interest rate paid on capital" shown here is the ratio between the capital-related component of the price perceived by the consumer and the total initial installed cost of the energy equipment in question. Capital-related expenses include return on debt, return on equity (unless the equipment is owned by the homeowner), taxes (with allowances for depreciation and other write-offs) and insurance.
(2) The baseline assumptions and the techniques used to compute the data shown on this figure are discussed in detail in the chapter on "Analytical Methods."

higher return on their capital than the interest rates assumed for the loan.

— Interpretation of the effect of interest rates on loans is straightforward. The policy issue raised here is one of finding a way to persuade lending institutions to risk investments in solar equipment.

Figure I I I-6 shows the results of a recent survey of the reaction of a number of lending institutions to a number of proposed policies. It is apparent that the lenders are not interested in tax incentives which assist potential owners. They are much more interested in performance certification of the devices and in Federal insurance and secondary markets for mortgages.

Many existing Federal programs insure or subsidize loans to promote objectives deemed socially desirable. These programs are discussed in the following section. How-. ever, one difficulty with a policy that creates such distortions in the loan market is that the implicit subsidies are extremely difficult to calculate, Encouraging the use of capital in one area necessarily removes the capital from other applications; thus, it is never clear who, if anyone, suffers as a result.

Another option for encouraging lending institutions to make financing available to potential owners of solar equipment would be to find some way of requiring lending institutions to include estimates of the borrower's ability to cover utility costs in the process of estimating the borrower's ability to pay back the loan. This type of analysis might often benefit solar equipment owners. Several techniques for doing this are discussed.

A SOLAR LOAN PROGRAM

A program which made loans more attractive to potential solar customers would have several generic advantages over tax incentives:

1, They avoid complicating the tax laws. Recent tax reforms have attempted to separate Government incentives programs from the revenue-raising function of the Internal Revenue Service.

2. The benefits of a subsidized loan may be easier for a prospective buyer to understand and its impact is more immediate. It is apparent that consumers of solar energy equipment must be persuaded to make purchases on the basis that their net monthly payments for energy will be lower if they install solar energy equipment. It is easier to make comparisons between conventional and solar billing when loan incentives are provided.

   A tax rebate requires owners to tie up their own capital while waiting for a refund. This wait can create real financial difficulty and the delayed gratification can have a psychological impact reducing the attractiveness of the incentive.

3. It may be easier for low-income families to take advantage of a loan program which requires a relatively small downpayment, for example, than a program which requires negotiating loans from conventional sources. It is interesting to notice that loan incentives may be more attractive to low-income homeowners than to homeowners with large incomes. Families in high-income tax brackets pay a lower effective interest rate since interest is deductible, and would therefore not benefit as greatly from an incentive which lowered the interest rates and hence their deduction.

4. If it is possible to place the loan as a part of a mortgage package used to finance an entire building or house, it may be possible to reduce the cost of administering the program and appraising the solar equipment. If tax programs are used, the IRS must presumably find a way to make independent audits of the projects.

Loan programs, of course, are not without problems. They can be complex and costly to administer, particularly if it is necessary to establish a separate bureaucracy to over-

Figure III-6.— Lender Perceptions of Likely Impact of Incentive Options on Loan Decisions

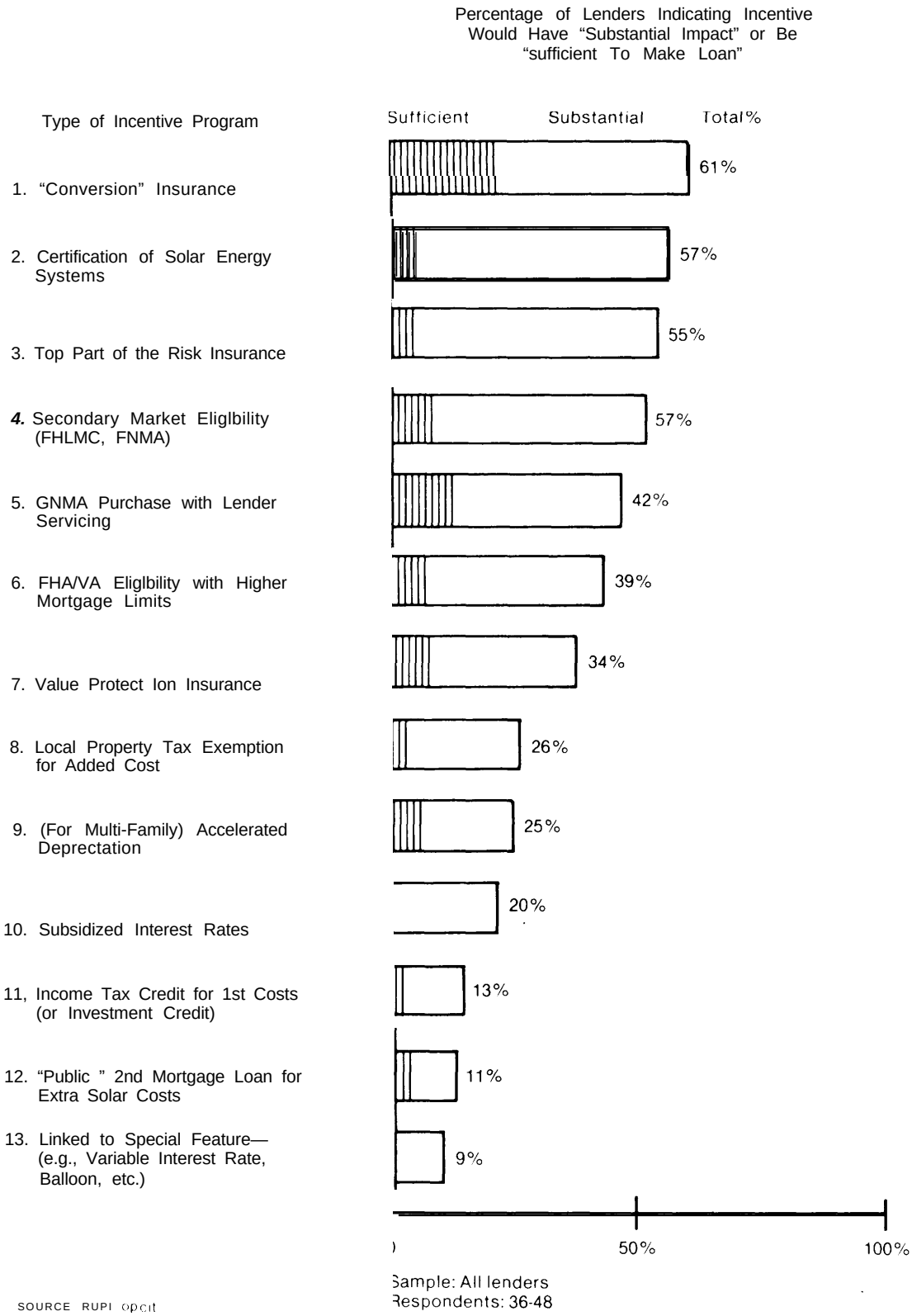

SOURCE RUPI opcit

see the operation of the program. Lending institutions constantly complain about the amount of paperwork required by Federal regulatory authorities and this paperwork can contribute significantly to the cost of a loan. Since the costs of paperwork are nearly Independent of the size of the loan, loan subsidies may not be an detractive technique for encouraging the installation of solar equipment costing less than $1,000 to $1,500. In these cases, it is much more likely that the purchaser will be able to make a single payment for the equipment and a direct grant or tax credit would be easier to administer.

There has also been some concern about loan support programs which commit the Government to administering programs over a term of many years.

The significance of all of the problems cited here depend on the details of how the loan program is administered. Concern about long-term Federal commitments can be reduced, for example, by simply having the Government make a single payment to a lending institution which would administer the loan, to cover the difference between the return received from a subsidized and a commercial loan.

If the Government uses an 8-percent discount rate (roughly the current cost of long-term Government bonds) a 3-percent loan covering 95 percent of the cost of a solar system owned by an individual homeowner has roughly the same effect on average monthly costs as an investment tax credit of 34 percent. If the system is owned by the owners of an apartment building, the loan would be equivalent to a credit of about 62 percent. The Government cost associated with the loan program for homeowners would be about the same as that for an investment tax credit of 29 percent (assuming no loan placement fee).

EXISTING FEDERAL LOAN PROGRAMS

The Federal Government has a great variety of programs for subsidizing and regulating the U.S. financial community. These fall into the following categories:

1. Direct Federal loans and programs which subsidize the interest paid to private lending institutions;
2. Programs which "guarantee" loans with a contract in which the Government agrees to purchase a mortgage offered by a private investment company if the borrower defaults (typically the debtor is then still liable to the Government for the outstanding funds and must either sell the property or permit the Government to sell it for him);
3. Loan "insurance" programs, in which the Government charges the borrower a small annual fee and agrees to reimburse the lender in the event of a default;
4. Federally chartered but privately owned "secondary mortgage" institutions, which purchase mortgages from primary lenders in order to free the funds of these lenders for further mortgages; the Federal National Mortgage Association can borrow funds directly from the Federal Treasury; and
5. Regulatory institutions which oversee the operations of banks, savings and loan institutions, and other lending organizations,

Each of these programs and organizations could retard the installation of solar equipment or, if Federal leverage is applied, accelerate it.

Direct Federal Loan Guarantees for Buildings

Most direct Federal loans are issued to projects designed to serve low-income groups–urban housing projects, hospitals, homes for the aging–although some funds are available for experimental communities and new energy equipment. Any direct loans for solar equipment will have to compete with their use for urgent social programs. It may make sense to increase funding in these direct-loan programs to reduce dependence on long-term Federal support for operating

costs (see discussion in the previous issue), The major direct-loan programs are:

Programs Administered by the Department of Housing and Urban Development (HUD).– 1) Public *Housing:* The Housing Act of 1937 (section 5) permits the Federal Government to directly finance housing for low-income families and the elderly through federally guaranteed municipal bonds. Additional funds are allocated each year to allow "modern i z at ion" of existing structures These programs do not have specific goals for energy conservation, although the properties must meet certain minimum HUD standards. Energy conservation features could be included in these standards.

(2) *Housing for the Elderly and the Handicapped:* **Section 202 of the Housing Act of 1959 provides loans for nonprofit sponsors of new or substantially rehabilitated rental housing for the elderly or the handicapped. The program also has no standards specifically designed for energy conservation. The projects constructed under this section, however, tend to be initiated by experienced and sophisticated managers, contractors, and architects, who are more likely to be attracted to novel energy systems than are the builders of public housing projects, which have been plagued by cost overruns, defaults, and tenant problems,**

Programs Administered by the U.S. Department of Agriculture (USDA). — The Department of Agriculture has two large Federal loan programs for low- and moderate-income rural families that could have applications for solar technology.

The first is a new conservation program under the Farmers Home Administration (FmHA), a $500 million to $1 billion project announced on February 28, 1977. Under this program, customers of electric cooperatives can receive 8 percent loans, repayable through their monthly electric bills, for such conservation measures as weatherization, storm window and door installation, and installation of attic cans, to a maximum expenditure of $1,500 a family. No new Federal appropriations or authorizations were necessary for this program; the money is left over from the FmHA's Section 502 home-construction loan program. But the conservation guidelines do not permit structural work, thus precluding solar installations. No legislation would be necessary to change the regulations; it could be done administratively within the Agriculture Department

The second large program is the Rural Electrification Administration (REA) loan program to electric cooperatives. There are two parts to this program — a direct loan authority of $75 million to $900 million (in FY 76) to cooperatives for electric distribution and transmission facilities. This program would appear to have no solar applications. However, a second REA program would. It is an open-ended REA loan-guarantee program, again to co-ops, for construction of electric generating facilities.

These loans, at prevailing interest rates, are made by a commercial bank or, more commonly, through the Federal Financing Bank within the Treasury Department. In calendar 1976, such REA-guaranteed loans totaled $3.7 bill ion,

There are no restrictions, either under the law or under REA regulations, as to what type of electric generating facility may be made with the REA-guaranteed loans. Thus, a solar electric generating plant could qualify for such a loan – at least so far as REA is concerned — assuming that the lending institution and the local electric co- operative conclude that the solar installation would be cost-effective.

The two largest impediments to using this large Federal program to foster the solar market would seem to be (a) the need for a backup system (a small diesel generator could suffice) and (b) the problem of convincing banks and co-op officials that a solar generating facility would be practical (when it is possible to make such a case). REA officials stress that their agency's mission is not to experiment with new or novel technologies, but to provide electricity to rural customers at the cheapest possible rates.

Programs Administered by the Small Business Administration (SBA).– The SBA has funds available for subsidizing loans to qualifying small businesses. These funds might be useful to firms manufacturing or installing solar equipment, since such firms tend to be quite small.

Loan Guarantees

Veterans Administration (VA).– The Serviceman's Readjustment Act of 1944 allows the VA to guarantee loans to qualifying veterans for residential buildings with one to four units. The program guarantees about 350,000 units a year, The loans can be made for any amount and cover 100 percent of the value of the property. There are no energy-conservation requirements, although the VA will only insure property which meets "minimum property standards" established by the FHA.

Federal Energy Administration (FEA).–The Energy Conservation and Production Act provides loan guarantees for a wide range of conservation and solar energy equipment. Regulations governing the application of the funds were still being drafted in mid-1977.

HUD Loan Guarantee Programs.–Amendments to the Housing Act of 1968 authorize HUD to make loan guarantees for privately developed new towns and for a variety of community facilities. To date, the program has extended guarantees to 13 new towns, some of which have projects for solar heating and cooling funded under the ERDA/-HUD solar heating and cooling demonstration program.

Mortgage Insurance

The Housing Act of 1934 established the Federal Housing Administration (FHA) and the FHA Insurance Fund to allow families with low and moderate incomes to obtain mortgages at reasonable rates, The program has since expanded to include apartments, cooperatives, nursing homes, and group medical practice facilities, The insurance program collects premiums from borrowers and provides a fund to reimburse lenders in the case of defaults. The value of interest rates allowed for FHA-insured loans varies and has recently been below the rate charged by the private mortgage insurance companies. In 1977, home-purchase loans financed under Section 203b charged 8-percent interest; home-improvement loans under Title I charged 12 percent.

FHA's direct participation in the mortgage market is diminishing. It now insures only about 17 percent of the loans made on 1- to 4-unit nonfarm residential buildings. The program is still extremely influential, however, if only because of the standards it sets for residential structures. All older homes purchased with FHA insurance must be appraised by the FHA and receive a "Certificate of Reasonable Value, " which forms the basis of the loan amount. New homes can be insured only if they meet FHA's "minimum property standards, " As noted earlier, these standards form the basis for many other Federal loan programs. They are also widely used by private lending institutions as the standards of value. Builders designing low-cost housing have, in many cases, chosen to meet these standards, since housing quality that did not measure up to them would have reduced the avail a-bility of financing for potential buyers.

The FHA standards reflect both the quality of the construction and its marketability. No firm policy has been established for solar-energy devices, although a 1974 amendment to the FHA law permits the use of FHA loans for solar equipment (The amendment may have been unnecessary, as FHA loans were used during the 1930's to purchase solar water heaters in Florida.)

Current FHA solar standards of performance quality employ the National Bureau of Standards " Interim Performance Criteria" for solar devices. " The major difficulty,

[10] Public Law 94-385, Title IV, section D

[11] 'Title IV of the Housing Act of 1968, amended as Title VII of the Housing Act of 1970

[12] RUPI, p 133

[13] FHA document FPMC-FHA, dated February 19, 1976

however, will not be the quality of the equipment but whether it will contribute to the resale value of the house. FHA is particularly sensitive on this point, since it deals primarily with low- and middle-income families to whom initial housing costs are important, A recent FHA publication noted that in inspecting property with solar devices, "[the] field office must also determine that a ready market exists for the property with the increased cost of the solar equipment."[14] An applicant failing to obtain FHA certification for a solar device has the right to a hearing before the local FHA office The results are difficult to predict and wi ll doubtlessly depend on the officials' familiarity with costs and benefits of solar equipment. Failing to obtain a direct FHA loan, the applicant has the option of utilizing a H U D " Experimental Housing Program (Section 233). "

HUD's experimental housing program is designed to provide an incentive for the construction of innovative or unconventional housing systems that do not meet the conservative standards of the FH A certification processes. The program's larger purpose is to develop familiarity with experimental designs that will provide the basis for altering the FHA standards.[15] Unfortunately, influence of experimental programs on traditional housing has not been notable thus far,

Loans for home improvement and mobile homes insured under Title I do not require a preinspection, although FHA audits projects after loans are granted. Up to $7,500 can be obtained without security.

The proposed National Energy Act would amend the act establishing these loan guarantee programs in three ways:

1. Section 110 would add public utilities to the types of institutions which can place loans for energy-conservation equipment insurable by FHA.
2. Section 111 clarifies the definitions for energy-conserving equipment and solar-energy devices.
3. Section 112 provides an opportunity to use Title I funds for experimental energy equipment but at higher interest rates than those conventionlly charged for home improvements, Actual rates would be determined by a study conducted by the Secretary of HUD.

Federally Chartered Secondary. Mortgage Institutions

Many of the mortgages issued for residential buildings in the United States are not held by the primary lending institution for the full mortgage period. Instead, they are sold to organizations which are more interested in holding notes over a long period and which use the primary lenders as agents to acquire them. Selling mortgages to a secondary-mortgage institution frees the assets of the primary lender, who is then able to use these funds to issue further mortgages. The Federal Government sponsors two of the largest purchasers of secondary loans: the Federal National Mortgage Association (called "Fannie Mae" by generations of brokers unable to pronounce FNMA), and the Federal Home Loan Mortgage Corporation (alias "Freddie Mac").

Primary lenders are critically interested in ensuring that their loans will be repurchased by these organizations. If the secondary-mortgage institutions are negatively inclined toward solar equipment, this could affect the willingness of primary lenders to approve loans involving such equipment. According to the RUPI study cited earlier, both FHLMC and FNMA have indicated that "until solar systems achieve some degree of market acceptance, they may conclude that incremental first costs should be largely, perhaps even entirely, excluded from the mortgageable value for the purpose of their programs,'" The manager of FNMA appraisals was quoted as saying that if "people

[14] FPMC-FHA 76-8

[15] Orville Lee, Director of HUD's Section 233 programs, private communication, 1977

[16] Title 12 (Banks and Banking, subchapter I I 1, 171 6a)

wish to experiment they should do so with their own money, not someone else's."[17]

On the other hand, the quasi-public nature of these organizations makes them susceptible to public-policy guidance.

The Federal National Mortgage Association was established by Congress in 1934 to "provide supplementary assistance to the secondary market for home mortgages by providing a degree of liquidity for mortgage investments, thereby improving the distribution of investment capital available for home mortgage financing" and to provide special assistance for special purposes. It purchased about $7 billion in loans in 1974.[18] It raises funds by private subscription, but has "backstop" authority to borrow directly from the Federal Treasury. Five of its 15 board members are appointed directly by the President of the United States, Fannie Mae can purchase loans guaranteed by FHA or other institutions [section 1717(b.1)] at full value. It can also purchase conventional uninsured loans, subject to restrictions on the loan-to-value ratio and other limitations [section 1717(b.2)]. About 85 percent of its loans are purchased from mortgage bankers.

The FNMA tends to place great reliance on the judgment of primary lenders, and as a result, its lending policies tend to be determined by the values of the mortgage banking industry.

The Federal Home Loan Mortgage Corporation operates under the auspices of the Federal Home Loan Bank Board (FHLBB) and primarily serves savings and loan institutions. The Corporation purchased approximately $1.5 billion in loans in 1974. The members of the board of the FHLMC are appointed by the FHLBB, who in turn are appointed by the President. The Corporation acts under regulations established in the Federal Home Loan Bank Act, It raises funds, entirely by subscription, from the institutions it services. The FHLMC's regulations place more risk on the primary lenders. For example, the FHLMC can require the primary lender to take back a repurchased loan if irregularities are discovered.

The proposed National Energy Act would amend the charters of both the FHLMC and FNMA, to make it clear that funds can be used for loans for "energy-conserving improvements to residential real estate."[20] Solar devices are not explicity mentioned, but their inclusion may have been intended.

Regulatory Authority

Nearly 97 percent of all loans granted in the United States are issued by lending organizations subject to some kind of Federal regulation. Savings and loan associations, for example, are tightly controlled by the Federal Home Loan Bank Board. The Federal Deposit Insurance Corporation regulates mutual savings and commercial banks. Neither appear to have a specific policy for encouraging or discouraging energy-related loans.

ISSUE 3

Can purchases of solar equipment for Federal buildings be used to stimulate the solar industry?

A major program for installing solar equipment on Federal buildings could be one of the Government's most powerful tools for encouraging the development of mass production of solar equipment by private industry.

Consider the following:

- The Federal Government owns or leases approximately 446,000 buildings in the United States, with a combined floor area of nearly 3 billion square feet and was spending almost $1.7 bill ion annually by mid-1977 to heat and cool them. (That figure was expected to

[17] Barrett, Financing the Solar Home, NSF Grant APR 75-18360 (June 1976), p 141

[18] Barrett, *op cit.,* p 139

[19] Barrett, Financing the Solar Home, NSF Grant APR 75-18360 (June 1976), p 139

[20] Title 1, sections113 and 114

reach $1 9 billion by the end of 1977, and about $3.5 billion by 1985,) If 10 percent of the present heating/cooling costs were capitalized — used for debt payments for the purchase of solar equipment — the Government could purchase nearly 100 million square feet of solar collectors annually. *

- The Federal Government subsidizes operating expenses, including heating and cooling costs, of a large number of projects built with Federal assistance. The Department of Housing and Urban Development alone paid more than $575 million in 1977 to subsidize the operating and energy bills of the nearly 1 million units of public housing administered by subsidized local housing authorities If 10 percent of this were capitalized, the Government could support the purchase of nearly 30 million square feet of collectors annually.

Ž It would be difficult for the Government to encourage private concerns to install solar equipment if it is not using solar equipment on its own buildings.

In spite of the enormous potential, Federal programs for purchase of solar equipment have been proceeding quite slowly, largely because of concern about the cost effectiveness of solar devices. This concern is often magnified by the inability of program administrators to accurately evaluate the costs of solar techniques, I n some cases, required formulas for determining the worth of a Federal investment (i. e., fixed limits on building costs, and present value computations with high discount rates) have inhibited these programs.

The opportunity to use Federal buildings for experimental energy equipment raises three difficult but important questions:

1. What should the Government use as a "discount rate" to evaluate alternative investments?

There is a considerable amount of disagreement among analysts on this point Some argue that the Government should make decisions with the same expectations of return as private investors This view was formalized in a ruling by OMB, which held that the Government should only invest In equipment which would result in a 10-percent return on investment since this rate "represents an estimate of the average rate of return on private investment before taxes and after inflation."[21] Others argue, however, that the free market does not necessarily accurately assess the social costs of investments and that the Federal Government should therefore use investment criteria which better reflect social costs. Even if this basic principle is accepted, however, it becomes extremely difficult to determine what economic expectations are proper Investments must be assigned values based on concerns about the environment, social costs, benefits to labor, benefits to national security, the stability of resource supplies, and other criteria difficult to evaluate in conventional economic terms

When the Government makes an investment that pays less than the return which could be realized if invested in the free market, society is losing some of the value of that capital. This of course means that society is subsidizing the investment In some way. The exact amount of this subsidy, however, can be as difficult to quantify as the value society might realize from the investment.

Nonetheless, several discount rates can be used to evaluate Federal equipment purchases:

- 10 percent rate of return after taxes and before inflation: this technique would result in Federal investments in solar equipment which neither lead nor lag investments made by private industry.
- Use of a rate of return equal to the rate of the growth of the U.S. GNP: this

'Assuming $20 per square foot for an Installed system

"George P Shultz, "Discount Rates to Be Used in Evaluating Time-Dlstrlbuted Costs and Benefits, " OMB Circular A-94, Mar 27, 1972

would encourage Federal purchases of solar equipment and ensure that funds extracted from the economy by the Government were not affecting overall economic growth. (This would imply a real discount rate of 2 to 5 percent.)

- Require only that the Federal Government recapture its initial investment without earning a return on the funds: this would obviously be a stronger stimulus to Federal purchase of the equipment. (Zero percent discount rate.)

The effect of applying different Federal discount rates to prospective Federal investments is illustrated in figure III-7; the anticipated effects of three separate discount rates on Federal decisions to purchase energy equipment are shown in figure I I 1-8.

Figure ill-7.—The Effective Cost of Capital to the Government as a Function of the Discount Rate Used in Decisionmaking

(Assumptions methodology used in preparing this figure are discussed in detail in volume 11, chapter 1)

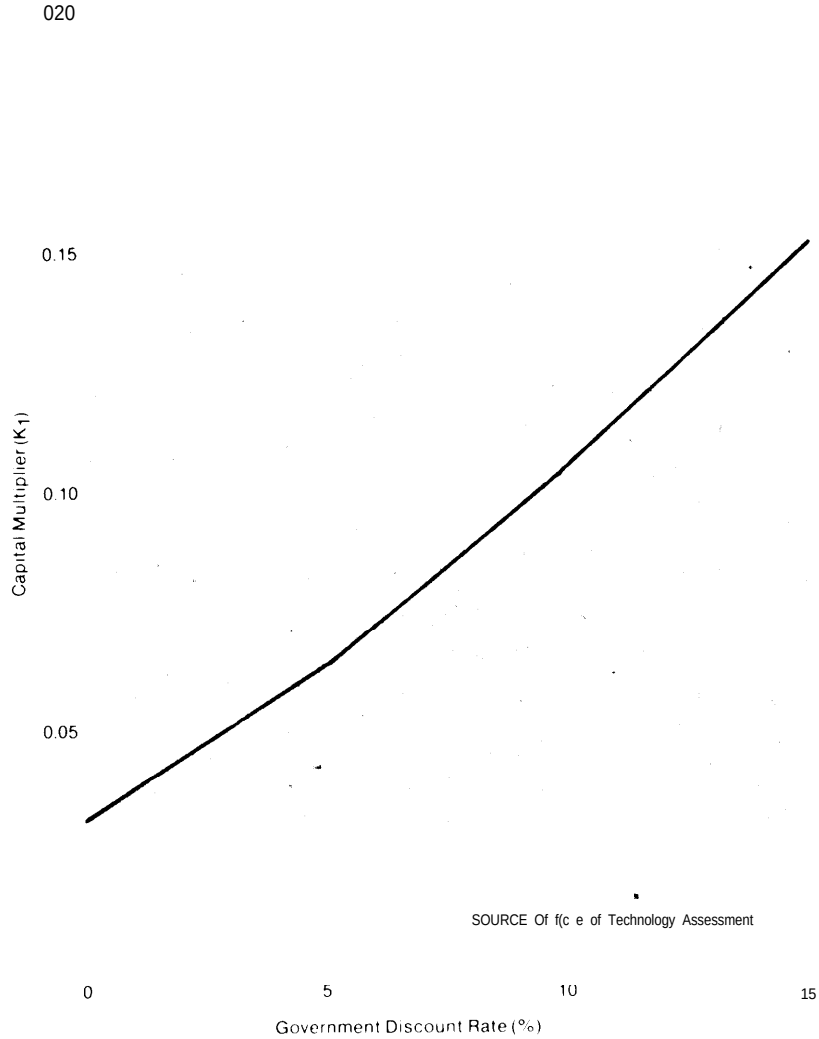

Figure III-8.—The Effect of Federal Discount Rate on the Perceived Cost of Federal Investments in Three Types of Solar Installations

(in $/month/unit in a 196 unit high rise apartment)

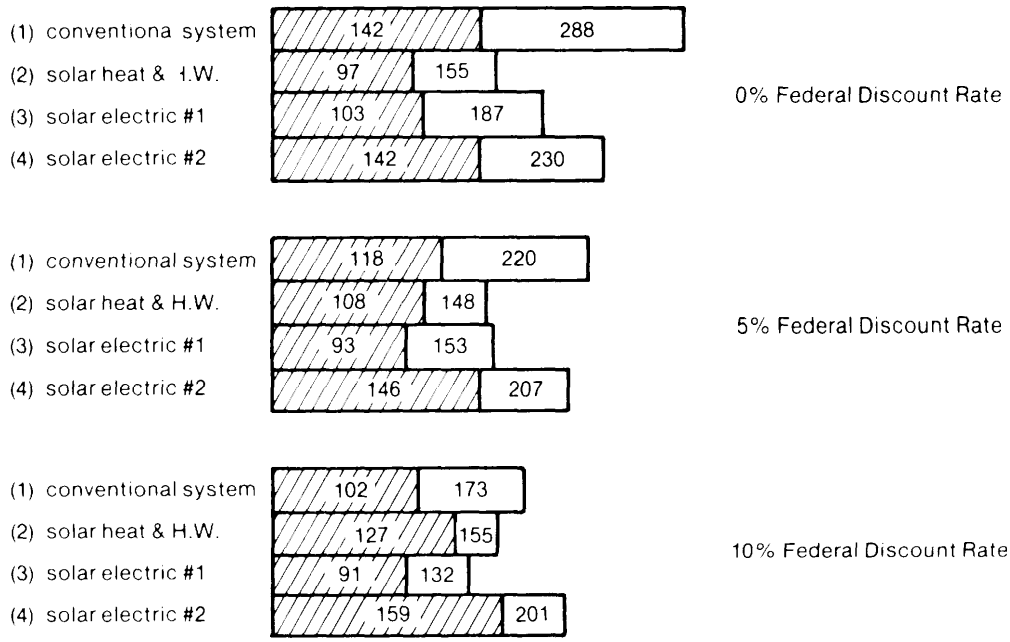

SOURCE: Office of Technology Assessment

ASSUMPTIONS

(1) conventional system is an all electric heating & cooling & hot water system using a two-pipe distribution system, central chilling units, and resistance heating elements in each unit

(2) solar heating & hot water system uses 4100 m^2 of flat plate collectors with cost 196 $\$/m^2$ installed (near term prices) and 1.2 million kwh low temperature thermal storage (seasonal in underground tanks

(3) solar electric #1 uses 2500 m^2 of two axis tracking collectors with GaAs photovoltaic cells. The collectors cost 102 $\$/m^2$ installed including collision optimistic estimate of future prices) 10000 kwh of low temperature thermal storage no batteries are used

(4) solar electric #2 uses 4263 m^2 of one axis tracking collectors with silicon photovoltaic cells. The collectors cost 300 $\$/m^2$ including the cost of the 15000 $/peak kW) the system has 17000 kwh of low temperature thermal storage and no batteries

assumes 1976 start up costs and electric prices increasing along BNL forecasts

assumes that electric prices increase by a factor of 5 over 60 = years (in constant dollars)

2. **If it is determined that the Government should subsidize the market in novel energy equipment, how should it select equipment?**

If it is assumed that the Government will **purchase equipment which cannot be justi**fied in traditional economic terms, values other than **those used by the free market must be applied This is a perilous undertaking since it runs the risk that the bureaucracy will select equipment which would not have been chosen by the market if it had been** given time **to develop along traditional lines, In extreme cases, mistakes might actually result in slowing the rate at** which solar equipment enters the market **if the Federal stimulus results in accelerating the installation of less desirable devices, thereby diminishing interest in** *promising* **alternatives. At a minimum, any Federal procurement program must be carefully integrated with an overall plan to promote a market for solar equipment as discussed** in the section reviewing overall policy alternatives.

3. What future fuel prices should the Government assume when evaluating the cost-effectiveness of solar technologies for specific applications?

THE POTENTIAL OF INDIVIDUAL AGENCIES

Department of Defense (DOD)

The Department of Defense operates 380,000 buildings with a total floor space of 2.5 billion square feet. " This includes 260,000 units of family housing in the United States. It recognizes that energy costs are becoming a major burden and a program is now underway to install a variety of solar-equipment designs on several typical DOD building types. Some of the projects are funded by DOE; some are funded internally. The projects include:

- –Shopping centers at Kirkland and Randolph Air Force Bases (heat and cool).
- –Administration building at Fort Hood (heat and cool).
- — High-temperature water from concentrating collectors at Fort Carson, Colo.
- —132 residential units on 16 Air Force, Navy, and Army bases (heat).
- –Three Army Reserve centers (heat and cool).
- — 50,000 square feet of classroom at Fort Huachuca, Ariz.
- –Air Force Academy housing (heat and cool, funded by USAF).
- – Refrigeration at the Navy regional medical center at Orlando, Fla.

According to a study conducted for DOD by the BDM Corporation, solar photovoltaic cells can compete with many generating devices now used to provide electricity to remote sites, (Standard DOD techniques were used to measure cost-effectiveness.) The study estimated that DOD could purchase over $100 million of silicon solar cells annually without subsidy if the current price of cells dropped by about 50 percent.[23] DOD is also testing the applicability of solar power in several new DOD construction projects and indications are that the results, if promising, will be phased quickly into other DOD construction and modernization projects.

Veterans Administration (VA)

Several solar projects have been proposed in the VA's 5-year plan:

- Retrofit of the San Diego VA Hospital for solar heating and cooling.
- A solar-assisted heat pump for a new VA hospital to be built in Palo Alto, Cal if.
- Solar hot water systems for three new hospitals under construction.
- 20 other projects were in the design stage for FY 77; 40 more were i n the preliminary design stage for FY 78,

The VA's 171 hospitals are built, operated, and maintained by the VA itself, rather than by the General Services Administration (GSA), which is responsible for acquisition and maintenance of the VA's non hospital facilities (these are discussed under the GSA program). Fuel expenditures for the 171 VA hospitals amounted to $23.5 million in FY 75.

VA officials have informally indicated that the agency's hospital system could accommodate 120 solar installations, at a cost of some $32 million. They estimate that retrofit would save $1.6 million annually in fuel costs and that this saving could be diverted into a principal/interest debt repayment fund for the solar equipment. " To accomplish this, the VA's 5-year Energy Plan would have to be revised. But apparently no legislation nor additional funding would be required.

"ERDA-76-6, pp 71, 75.

[23] "DOD Photovoltaic Energy Conversion Systems Market Inventory and Analyses, " Prepared for DOD and FEA, spring 1977

[24] Clark Granninger, VA, 1977

U.S. Postal Service (USPS)

An FEA-sponsored study found that **USPS "owns or operates approximately 75 million square feet of floor space in 36,000 buildings. " Of this floor space, approximately 80 percent is concentrated in *750* buildings. "**

The USPS has two solar demonstrations underway: a new post office building under construction in Ridley Park, Pa., and a retrofit project in Boulder, Colo A study is being made of the possibility of designing solar equipment for a standardized building design which the USPS could use in many parts of the country.

The USPS leases more than 80 percent of its buildings from the private sector, and the agency has the legislative authority and administrative flexibility to work any kind of variation on utility payment responsibility At present, however, it has no positive program for promoting the use of solar power in its leasing program. The agency has not developed a comparative cost analysis system, but USPS officials feel that regional USPS personnel are professionally competent, as well as definitely inclined, to solicit solar as part of its leasing program if encouraged to do so.

General Services Administration (GSA)

The General Services Administration has jurisdiction over all Federal office space, with the exception of post offices, DOD facilities, VA hospitals, and certain other specialized facilities It has installed solar equipment on only two Federal buildings — one In Saginaw, Mich , the other in Manchester, N.H. Planned projects include:

- **. Heating and cooling facilities i n a new Border Patrol building at Marfa, Tex.**
- **Ž Heating and cooling facilities at Federal office buildings in Denver, Colo , and Carbondale,** Ill,
- **Solar heating and cooling facilities at a Forest Service building in Arizona**
- **Regional GSA adminstrators are soon to make recommendations for solar energy projects for one or two GSA buildings in each region of the country,**

GSA's ability to install solar equipment is limited by the fact that in recent years it has often chosen to lease buildings rather than to purchase them.

Health, Education, and Welfare (HEW)

The Department of Health, Education, and Welfare is charged with demonstrating solar heating and cooling in Federal and private hospitals and other health-care facilities as part of DOE commercial demonstration program. An interagency agreement between DOE and HEW authorized HEW to solicit proposals for such projects, it calls for an "open" solicitation; that is, solar contractors are to be invited to make proposals for heating and cooling demonstrations at certain health care facilities Five or six projects are anticipated under the proposal, and about $1 million in DOE funds is involved.

In addition, DOE has funded a $300,000 project for a solar installation at an Indian health-care facility in New Mexico and a project at a Public Health Service hospital,[26]

BUILDINGS OPERATED FULLY, OR IN PART, UNDER REGULATIONS ESTABLISHED BY THE FEDERAL GOVERNMENT

The Federal Government, in addition to the buildings it owns or leases, supervises the operation of many buildlngs that receive Federal loans or operating subsidies The Government could use Its leverage to encourage the use of solar-energy equipment on such projects. In the case of buildings which receive operating subsidles partially attributable to energy costs, the Government might directly benefit from diverting annual subsidy funds to programs designed to capitalize solar devices.

The largest number of federally sponsored residential units have been con-

"Sola r Energy Government Bui Id ings Project, MITRE Corporation, p 4

[26] Carl Conner, ERDA, private communication, 1977

structed under public housing programs. Over 1 million units of low-cost housing have been constructed with federally subsidized municipal bonds since 1937. Projects covered under Section 8 of the Housing Act also receive annual payments to ensure that tenants are charged no more than 15 to 25 percent of their annual income for rent,

Unfortunately, current accounting procedures make it difficult to determine the fraction of annual subsidies attributable to energy costs. HUD officials estimate that **energy costs currently account for 20 to 30 percent of the subsidy payments.**

Public Housing

The Public Housing Program has funds for modernizing existing structures (the approximately $20 mill ion available in FY 77 was capitalized by local developers into about $200 million in project funding). Energy conservation is considered a major objective of recent modernization investments. However, HUD has no program-wide conservation goals. There are no real incentives for local housing officials to invest in conservation equipment, largely for the following reasons:

–There is a general feeling that **the Federal** Government will have to continue to subsidize energy costs, and local officials therefore apply all available funds to other modernization projects.

–There is much less glamour **in retrofitting older establishments with conservation equipment than in overseeing innovative new projects. The effectiveness of area personnel tends to be judged on the basis of their performance on newer projects.**

Until late 1974, HUD's legal staff had ruled that operating subsidies for public housing could not be used to capitalize investments in energy-conservation equipment. A more recent ruling changed that opinion, and there are now judged to be no legal barriers to using operating funds for solar and other energy equipment. However, there has been little attempt to use operating funds for solar equipment, since HUD officials are skeptical that solar devices could be economically attractive on their projects without additional Federal subsidies.

Acquired Housing

In addition to public housing, the Federal Government acquires a substantial number of residential **units because of foreclosures on VA, FHA, and FmHA loans (HUD currently owns approximately 90,000 such units). The current policy is simply to dispose of this property as rapidly as possible without making modifications to the structures. It might be desirable, however, to require that the Federal Government provide certain of these houses with energy-conserving equipment before they are resold.**

ISSUE 4

Could any existing Federal grant program be used to subsidize the purchase of solar- energy equipment?

Yes; many of them could, Some direct-grant programs already have energy conservation as an explicit objective; others, though initially designed for other purposes, could be used to administer funds for solar insta l l at ions,

Taken together, funding for such programs totaled over a billion dollars in FY 77 and thus could be used to provide substantial subsidies for solar equipment—even if only a small fraction of the funds could be justified for this purpose. However, it will be difficult to divert funds from many existing programs because they are already oversubscribed for their primary purposes; in these cases, solar equipment would have to be paid for through additional funding. To have solar grant money administered through existing programs would have the advantage of avoiding the addition of still another separate program to what is already a bewildering array.

If an attempt were to be made to coordinate these diverse and frequently overlap-

ping programs in the interests of accelerating the commercialization of solar energy, it would probably be desirable to use the services of the Federal Regional Councils in each of the 10 Federal regions nationwide. Councils are headquartered in Atlanta, Boston, Chicago, Dallas, Denver, Kansas City, New York, Philadelphia, San Francisco, and Seattle These councils can use personnel from several different agencies to coordinate programs across jurisdictional lines and which receive funding from several different sources.

FEDERAL GRANT PROGRAMS

It will not be possible to summarize all Federal grant programs which could be used to subsidize solar energy systems. A few of the programs which seem most immediately relevant are:

Programs Administered by HUD

Community Development Block Grants are provided under the Housing and Community Development Act for a variety of urban renewal and community improvement activities which may include the rehabilitation of housing. About $250 million was spent during FY 76 to secure loans totaling about $500 million Energy conservation was not a major priority of these programs since most of the funds were needed simply to make buildings habitable.

Housing Rehabilitation Programs are funded under Section 312 of the same Act. Their purpose is to rehabilitate housing and to ensure that housing meets the requirements of local building codes. Use of these funds for conservation is improbable because the program's success tends to be measured by the number of units completed. Solar installations would reduce this number.

Homeowner Grants are provided by Section 302 of the Housing and Community Development Act to assist persons needing funds for housing repairs.

Homeowners Incentive Demonstration Programs, authorized under the FEA extension act (Title IV), are designed to evaluate the effectiveness of incentives for encouraging homeowners to install energy-conservation or solar energy devices, Two hundred million dollars were authorized for the program in FY 77.

Housing Finance Interest Subsidies are provided under the 1974 Housing and Community Development Act. This Act allows HUD to make grants to State housing finance agencies that use the money to cover interest payments on bonds sold for rehabilitating housing. Buildings must be examined by HUD before such grants are made. They must meet HUD's minimum property standards. (See Issue 2 for a discussion of the impact of these HUD standards.)

Programs Administered by the Department of Energy

The Energy Conservation and Production Act (P. L. 94-385) established a 3-year program in which $200 million would be given to people with low incomes for the purpose of insulating and "weatherizing" their residences. The funds are to be administered at the local level by community action agencies Standards for allowable improvements will be established by the National Bureau of Standards.

Programs Administered by the Department of Health, Education, and Welfare

The Administration on Aging oversees a program which gives emergency relief to elderly persons finding themselves unable to meet rising fuel bills. Grants also are made to State agencies which provide direct assistance in insulating and weatherizing residences.[27] The program is very modest; its budget is approximately $1.5 million.

The Social Services Administration provides up to $500 for winterization to families qualifying for Aid to Families with Dependent Children. " The program requires the recipients to match the amount of the Federal grant

[27] Older Americans Act, Title III
[28] Social Security Act, Section 403

Programs Administered by the U.S. Department of Agriculture

The Farmers Home Administration may make loans or grants in amounts up to $5,000 to low-income rural residents for the purpose of improving their homes to meet local code standards. [z9] The funds can also be used to purchase insulation. Its applicability to solar equipment is uncertain.

Programs Administered by the U.S. Department of Commerce

The Economic Development Administration is authorized by both the Public Works and Economic Development Act of 1965 and by the Public Works and Capital Development and Investment Act to make grants to communities with the central objective of stimulating employment in regions with severe unemployment problems. Annual expenditures are typically in the order of $200 million, although a special "one-shot" infusion of $2 billion was granted in 1976 because of severe unemployment problems.

It may be easier to use this program for solar and conservation investments than any other Federal grant program. This is because money used for these purposes would not have to compete with other, critical uses of the Federal grant funds (e. g., housing rehabilitation). The object of the program is to stimulate employment and, as shown elsewhere in this paper, solar energy is a labor-intensive industry which requires skills in job areas currently suffering serious unemployment. Funds from the CD I program, however, are typically used for "public works" projects which have high visibility.

FEDERAL INFORMATION PROGRAMS

In addition to the major grant programs described above, a series of activities which provide grants and/or technical services exist within the various Federal agencies. These include such things as the Extension Service of the U.S. Department of Agriculture, the Product Dissemination Program of HUD, the Comprehensive Employment and Training Act administered by the Department of Labor, the Community Services Administration, and Action. Some of these programs are bringing energy conservation Into their activities through various means. These include grants for weatherization, providing labor for performing this weatherization, and information services on reducing energy costs to homeowners.

These programs appear to have the flexibility to incorporate solar energy in their activities. As such, their contact with a large portion of the American population could serve to accelerate the penetration of solar **energy. A similar course is being proposed with regard to the Energy Extension Service now being developed by DOE.**

ISSUE 5

When private companies are subsidized with Federal funds to develop equipment for the commercial market, how can a balance be struck between the company's need to retain a useful proprietary interest in the technologies developed and the Nation's right to have complete disclosure of the results of federally sponsored research?

There is no easy answer to this question. But it raises what is likely to be a central problem for all federally sponsored efforts to develop small, commercially viable energy technology.

On the one hand, the public has a clear interest in ensuring the widest possible dissemination of research and development work conducted under Federal auspices. This is particularly important with onsite solar equipment because many of the manufacturers are small, having neither large research staffs nor easy access to information about a rapidly changing technology.

On the other hand, a company which is not permitted to retain any proprietary information concerning the equipment it de-

[z9] Housing Act of 1949, Sect Ion 504

velops with Federal funds may conclude that it has no commercial interest in the development. Without patent protection and without any advantage of advanced design knowledge, the company may determine that it cannot risk manufacturing the equipment. The company would undoubtedly enjoy some competitive advantage as a result of its research, if only because of the experience and ideas it obtained. The Federal grant would have placed the firm on the edge of the "state-of-the-art" in at least one area of technology— a position that would leave the company in a uniquely favorable position to make further progress with its own funds. Most of the commercial technologies which have "spun off" from research sponsored by the Department of Defense and by NASA have resulted from such situations. Even in situations where the complete results of research work were published, the companies involved retained valuable experience in the practical difficulties associated with manufacturing and design which might be difficult or impossible to publish. (A machinist who d is covers that a drill works best if you spit on it before making a critical hole, for example, may hold the key to a problem which would require another company months to resolve.)

At present, the Government does not have much flexibility in adjusting its policies in this area Only NASA is now able to grant exclusive license protection to products developed with Federal support. Several innovative approaches have been proposed, however, and DOE is funding the development of a new heat-engine design in an experimental arrangement with the Sunstrand Corporation. In this program, the Government is acting very much like a private source of "venture capita l," giving partial development funding and retaining a partial interest in the result

A major effort should be made to explore alternative approaches to Federal support for commercial products, and to determine their utllitv and jiustice to the taxpayer.

ISSUE 6

Should the Federal Solar Program include a major effort to encourage competitiveness in solar energy and promote small solar business?

The relatively small investments associated with onsite solar energy devices have made it possible for many small businesses to enter the market. Indeed, much of the innovative work now being done in the area has emerged from firms with very limited assets. This unique feature of the onsite solar energy field presents a difficult choice for the policy maker. A program for supporting small, relatively simple technologies will have many more firms to choose from than a program for developing large energy technologies, which require large capital investments in individual projects. Supporting some of the small solar energy firms offers an opportunity to explore a rich variety of concepts without a massive investment in any one approach, as well as a better opportunity to foster competition in the energy market. Apart from any such pragmatic advantages, promoting small business has always been considered a desirable objective in and of itself; the small, independent competitive firm is still a cherished ideal of the American economic system.

On the other hand, small firms are likely to have limited marketing experience, no nationwide representatives and contacts, and limited research funds. Some may be inefficiently managed and others have limited experience with the difficulties associated with taking a good engineering concept, developing a marketable product, constructing equipment for mass production of comparable products, and developing sales and advertising policy. The policy options offered in this paper do not resolve this dilemma; they give encouragement to small enterprises but do not include requirements which ensure that small enterprises get a specified share of Federal funding.

The Small Business Administration (SBA) has played a very limited role in promoting small solar energy businesses, although it

has begun to investigate the field as the result of congressional prodding. SBA will participate in DOE's program to finance selected energy-related inventions.

A separate but related issue concerns Federal policy on restraint of trade. It is apparent that solar energy systems, particularly onsite devices, will increase competition in the energy supply industry. A substantial fraction of the cost of smaller solar systems (particularly and virtually the entire cost of passive solar systems) results from onsite construction work which would be performed by local building contractors. The building industry is one of the most competitive industries in the country, The diversity of approaches, the fact that different climates will call for different systems, and the relatively small investments required to manufacture many simple types of solar devices will almost certainly maintain the competitive nature of the solar manufacturing industry. There will, of course, be items which can only be produced economically in very large quantities. Production of sit i-con solar cells, for example, probably must take place in facilities capable of producing 5 to 50 MWe annually if low cell costs are to be achieved.

The Federal Trade Commission is monitoring the solar industry to insure that existing oil companies and utilities do not dominate the field to the point of restraint of competition in the area. Both utilities and major oil companies are entering the solar industry. A majority of the photovoltaic devices manufactured in the United States for example, are produced in subsidiaries of major oil companies. Both the Electric Power Research Institute and American Gas Association have sponsored projects in solar energy and a number of utilities have undertaken projects on their own. (For example, the Southern California Gas Company has been involved in a large-scale program for demonstrating solar hot water in California since 1973.) The Pennsylvania Gas and Water Company acts as a manufacturer's representative for solar collectors, and Gasco Inc. of Honolulu has a direct merchandise arm which sells collectors as well as gas appliances.[30] The advantages and difficulties of utility participation in ownership of onsite solar energy equipment is discussed in some detail in chapters V and VI. It will be extremely difficult for any organization to monopolize the solar industry because of the inherent diversity of approaches; there will probably always be intense competition between different designs. Probably the most serious danger to competitiveness in the solar industry is the Federal Government itself. The potential for competition between different organizations and different engineering concepts could be distorted if Federal funding is unwisely allocated.

ISSUE 7

What sort of consumer protection is required in solar energy products?

The central problem, not surprisingly, is the novelty of the equipment. Homeowners, builders, architects, and the financial industry share these fears:

1, Will the system work as advertised?

2. How long will it last?

3. Will operational costs be prohibitive?

4. Will a solar unit hurt the resale value of property on which it is installed?

5. Will the technology change so rapidly that the equipment now available will soon be obsolete?

These anxieties are intensified because: (a) there are no standard techniques for presenting performance data on the variety of different systems for sale, and (b) many systems are offered by small organizations without substantial assets or wide experience in manufacturing. Indeed, many of the firms now producing solar collectors, for example, are likely to vanish during the next 10 years, leaving their customers with equip-

[30] J H Williams, "Solar Energy and the Gas Utility, " February 1977 (Distributed by the American Gas Association)

ment no one else is qualified to repair. That part of the problem will get even worse, because potential buyers will be faced with an ever-widening array of equipment and advertising c laims.

To be sure, any new technology undergoes such growing pains. And in due course certain manufacturers will establish reputations for high-quality products and for backing their systems with attractive maintenance contracts. Unfortunately, it could take years for this to happen — and in the meantime some unscrupulous dealers are likely to enter the field.

Can the Government help to remove most of these concerns? It will be extremely difficult the way things look now — the Government itself is uncertain about the best technical approaches to support, and it should not be dogmatic anyway. However, standards have been established for the equipment the Government buys, and this could provide some guidance for prospective purchasers. A process for developing standards for solar heating and solar hot water equipment has been underway for some time, and plans are being made to certify a national testing laboratory which can assure that tests are properly administered. Progress on both fronts, however, has been frustratingly slow Great care is needed to make sure that such standards do not inadvertently eliminate novel approaches.

At a minimum, it will be necessary to develop mechanisms to ensure that standards are updated to take account systematically of advances in solar technology. It will not be an easy matter to work out standards for another reason: each subtechnology will require its own set of standards, which must be arranged in such a way that they are applicable to a variety of building sites Some such work has already been done The National Bureau of Standards has developed interim standards for solar heating and hot-water systems, and NASA-Lewis has developed preliminary standards for the photoelectrlc systems which will be purchased for electric generation.

The Government could also help by requiring that all systems sold bear performance ratings conducted under procedures prescribed by Federal law.

Another major problem has been the shortage of building inspectors trained to recognize mistakes made in installing solar equipment. Installation costs often represent a significant fraction of the total cost of a solar system, and a large fraction of the problems encountered with solar equipment is attributable to improper installation. Federal support of training programs for inspectors could provide useful assistance in this area.

However, none of these approaches can eliminate the basic fear which surrounds a novel technology. The most powerful influence on the public's reaction to onsite equipment will be the behavior of the solar industry itself. Because of its strong self-interest in policing itself, the industry may well be the best source of advice for ways in which the Government might assist in building consumer confidence

ISSUE 8

What are the objectives of the solar demonstration program, and what criteria should be applied to the systems demonstrated?

There has been considerable confusion in both areas. On the one hand, demonstration projects are presumably not a part of a research program since the systems demonstrated are presumably commercially available. On the other hand, there is little point i n demonstrating that commercial systems work if a market for them already exists or i n demonstrating that they are too expensive if there is no market. The program could be used to reduce costs only if the program purchased so many units of a given type [halt manufacturers could justify installing mass-production equipment, This course seems undesirable, however, since funds used for this purpose could probably be better used to support tax incentives and loan assistance.

Passively heated and cooled buildings are perhaps a unique case, however. A large number of concepts are possible, and it is frequently difficult to predict how designs will work or how much they add to construction cost without field demonstrations. A large number of demonstrations is needed since it is necessary to carefully tailor designs to each climate (perhaps to each microclimate). Another possible objective of the program is to provide information about the lifetime, reliability, operating costs, and unexpected problems associated with installations operated by inexperienced owners. While information in this area is needed, the use of expensive demonstration programs to gather it must be justified carefully. At a minimum, the demonstration programs should be integrated with an effort to obtain data in these areas using laboratory testing equipment. An effort should be made to publish the results of instrumented analysis of the demonstration units in many different climatic regions as soon as possible and to communicate this information to building designers in the area.

Information gathered about the cost of the units purchased in connection with the demonstration program must be treated with great caution and cost data prepared with considerable care. It is important, for example, to separate costs incurred in the demonstration unit which would not have been incurred if the device were built without Federal support (the cost of instrumentation, for example, must be separated from other costs). Interpretation of cost data is difficult since, if the demonstration program is choosing its sites properly, the demonstration solar device will be among the first of its kind in the region. It is to be expected that installers charge more for installing the demonstration units than they would charge once such installations become routine. Mistakes encountered in the first-of-a-kind installation can be avoided as experience is gained.

Perhaps the most useful function of the demonstration program is simply one of propaganda: bringing solar energy systems to the attention of the local population and providing an example of a real, functioning unit which can be visited by interested building contractors, potential investors, and other interested parties,

THE EXISTING MARKETING PLAN

There is a great deal of confusion in the current program about which technologies should be demonstrated, when they should be demonstrated, and the size of the applications which should be chosen for demonstrations. The lack of a coordinated plan has resulted in the following:

1. A consistent underemphasis on retrofit applications when the retrofit market is much larger than the market for new construction.
2. Underemphasis on combining solar and conservation demonstrations, Passive solar buildings have received little attention as a result.
3. Lack of planning to extend demonstration into electric generation and cogeneration equipment and into industrial and commercial markets.

A lack of a systematic approach to these technologies has resulted in many a situation where systems intermediate between residential and large utility applications have been given much too little attention. Part of this distortion, of course, is inherent in the unevenness of congressional support for different kinds of programs.

Commercial and industrial facilities and multifamily residential units are attractive initial markets for solar equipment for a number of reasons:

1. It should be easier to retrofit solar equipment on commercial buildings than on residential buildings since running pipes from collectors to the heating and cooling equipment would disrupt a proportionately smaller part of the building.
2. The owners of commercial buildings tend to be more sophisticated at anal-

yzing life-cycle costing than **owners of single family residences.**

3. **Systems on** commercial buildings may **have** greater visibility than systems **in residential neighborhoods, and businesses would frequently advertise their use of solar energy.**

4 **Cooling technology and some heat engine technology which is not ready for residential demonstrations is now available for commercial demonstration.**

5. **Single commercial systems would have a much greater impact on fuel consumption than an individual residence, and would be easier to manage with a small staff than numerous installations on different types of residences.**

ISSUE 9

Which Federal agencies are conducting solar research programs, and how well are these programs coordinated?

Those agencies with major responsibilities in solar **energy are DOE (which has been given responsibility for al l solar research programs and is developing programs to accelerate the commercialization of solar technologies which are ready for market) and HUD (which is managing the residential heating and cooling demonstration pro**grams). I n addition to these major activities, however, there are solar programs **in the Department of Health, Education, and Welfare, the National Science Foundation (which retains a small solar-energy staff even though the bulk of research has been transferred to DOE), the National Oceanic and Atmospheric Administration [which collects such climatic data as sunlight intensities and wind-speeds for use in the evaluation of solar technology), the Defense Department (which is going to install a variety of solar devices on military property, including electric systems for remote facilities], NASA (which has great institutional interest in the development of an orbiting solar photovoltaic system — and is reportedly investing heavily in designs for such systems out of internal funds — as well as using solar cells to power spacecraft), the Department of Agriculture (which is developing solar heating for barns and other farm buildings, along with equipment for agricultural process heat, irrigation pumps, etc.), and the National Bureau of Standards (which is developing standards and testing procedures for solar equipment following initial work by NASA). The Department of the Interior and many other agencies have smaller programs, most of them for the installation of a solar hot water or heating system at one of the agency's buildings.**

Still other Federal agencies are in a position to implement regulations affecting solar energy systems. For example, the Federal Energy Regulatory Commissin(FERC) in DOE (formerly the Federal Power Commission) is helping to develop design requirements for solar electric commercialization projects. The Veterans Administration is examining the feasibility of allowing VA loans to be used for solar equipment and is planning to use solar equipment at some of its hospitals. The section of HUD charged with administering FHA loans is examining the possibility of changing minimum property standards to permit funding of solar equipment. The Council *on* **Environmental Quality is conducting an independent study of solar heating and cooling for single family houses, The list could be extended.**

To some extent, of course, duplication between agencies in solar research and development produces healthy competition. It can prevent the development of a monolithic approach to solar-technology research which could lock out innovative concepts.

On the whole, officials interviewed agree that duplication exists, But they argue that most work is complementary and that it is coordinated with administration-wide solar policy. **They contend that each agency should carry out its unique responsibility in this area. Some say that funding solar development through a number of agencies probably results in a larger total solar budget because it is easier for each of two depart-**

ments to get a $2-million solar project than it is for one department to get a single $4-mill ion project.

There are, however, areas where confusion in management could create difficulties:

— Plans to change FHA and VA loans are proceeding without any clear guidance from DOE, which has a clear mandate to commercialize solar energy technology.

– In the meantime, HUD has proceeded to fulfill its mandate in the demonstration of residential units and is developing technical expertise and management experience in demonstrating novel solar technologies

–There have been some misunderstandings between NOAA and DOE over which agency's funds should be used to maintain installations for developing a data base on insolation, wind speed, and ocean temperatures.

— Total energy studies are proceeding in HUD and the National Bureau of Standards, as well as in DOE Coordination between these programs could be improved

— Research in advanced heat engine technology relevant to solar energy is being funded by DOD, NBS, the Department of Transportation, and NASA, as well as by DOE In some cases duplication has occurred. Coordination could be improved,

– Heavy NASA support of orbiting photovoltaic systems, not well coordinated with DOE, could greatly distort the overall photovoltaic development program.

ISSUE 10

Does the present Federal program for developing solar electric generating equipment overemphasize large, central station approaches at the expense of smaller, onsite approaches?

In spite of recent changes that have upgraded research on electric generating systems for nonutil ty appl cations, the bulk of DOE's solar electric research program is directed at technologies designed exclusively for large, central generating facilities This strategy has several difficulties:

1. There is no clear indication that large solar electric plants are more efficient or produce less costly energy than smaller, onsite facilities

2 The large-scale projects being examined are very unlikely to make a contribution to commercial energy supplies before the 1990's; smaller devices may have greater potential for making contributions in the near future

3 The very large solar electric system being contemplated will require simultaneous development of several novel types of technologies (collectors, receivers, storage devices, etc.) These systems will be required to operate on a large scale in the proposed multi-megawatt systems. It may be better to test and evaluate components on a smaller scale, or to develop components which could be used on a variety of systems of different sizes.

4, Concentration on large systems requires that difficult choices be made between many competing approaches before any of the alternatives have been adequately tested. Funding smaller projects would permit greater numbers of concepts to be tested at much lower risk.

DOE officials recognize that there are numerous total energy concepts and proposals for generating electricity for specialized agricultural and industrial applications, where available technology could be used in an expanded demonstration program, But they also note that additional funding would require additional staffing, which remains as the Office of Solar & Geothermal Energy Program's largest problem. The solar program does project a number of experimental projects, which could include agricultural process heat, small community applications, agricultural and industrial centers,

and several other projects in thermal electric generation. At least one project of each type of total energy could be built to research problems and demonstrate potential. Programs to develop heat engines and storage apparatus compatible with onsite electric equipment also appear to be supported at much lower levels than is warranted by the equipment's potential.

ISSUE 11

What kinds of research need increased emphasis in the Federal solar program?

COLLECTORS

Supporting the development of advanced collector design presents special difficulties since there are a large number of devices being developed independent of Federal funding and the number of possible designs is extremely large. The development of reliable, inexpensive collectors is, however, probably the single most important technical problem faced by the solar community.

Federal support has concentrated in four areas: 1) improving the design of flat-plate collectors used in connection with the heating and coollng demonstration program; 2) developing heliostats for the central receiver demonstration projects; 3) developing and testing materials for use in collectors (e.g. , low-cost plastics for covers and receivers), and 4) developing a series of distributed collector designs in connection with the total energy program While the last program has been effectlve in testing a variety of collectors, an even greater variety must remain withiout serious Federal support. For example, relatively little attention has been paid to the development of Inexpensive pond collector and simple, lightweight two-axis concentrators for use with small heat engines and photovoitaic devices designed for use in high-intensity sunlight One major difficulty with many federally sponsored designs has been the temptation to "over-engineer" devices rather than to emphasize techniques for simplicity, low material requirements, and low cost.

HEAT ENGINES

An enormous range of technical possibilities for heat engines is relevant to solar applications. While heat engines currently available can be used in near-term solar energy designs, few of the engines have been designed especially for solar applications — modifications of engines produced for some other application will be used. Additionally, most near-term applications of solar energy will utilize smaller heat engines than those typically used in utility operations, and the technology for small heat engines which can operate from an external heat source is frequently not as advanced as the technology used for large central powerplants, in many cases, the only small heat engines available are based on European designs.

The development of improved heat engines would unquestionably lower the cost of solar energy for applications requiring a high ratio of electrical to thermal energy New devices which could make efficient use of low-temperature solar heat sources could reduce the complexity of solar collectors required for power generation. More efficient heat engines can reduce total system costs by reducing the size of the collector field needed to provide a given amount of electrical or mechanical energy since collector costs tend to dominate overall system costs. Development of a high-performance Stirling, Ericsson, or closed-cycle Brayton device would open many attractive options for solar electric generation. Development of improved cogenerating systems would improve the overall utilization of the solar energy received in applications where there is a requirement for thermal energy,

Most federally supported work on advanced heat engines, however, is relevant only for large central powerplants and the funds available for engines designed for solar, transportation, and industrial applica - tions are very limited,

Background on Federal Programs

Most other work on advanced heat engines in DOE is being funded by the Office

of Conservation. Projects are funded in three categories:

1. Heat engine research in the Division of Transportation Energy Conservation.[31]

Development of new heat engines for automobiles and other road vehicles is being coordinated with major U.S. automobile manufacturers who apparently are unwilling to fund development of advanced engines without Federal prompting.

Three projects are of particular interest for solar applications:

- A program is underway to develop an efficient Brayton-cycle (gas turbine) engine. In the past years, tests have accumulated the equivalent of over 150,000 road-miles on some designs. Work is also underway to develop ceramic engine components capable of withstanding very high temperatures (2,500" F). The government will purchase seven General Motors Brayton engines during FY 78 for $500,000. The engines will be used for road tests.
- The Government is also contributing to the Ford/Philips program to develop a Stirling engine for road vehicles. This work will include continuing tests on the current 170 hp design and development of a smaller (80 to 100 hp) design. Work next year will include completing engine performance and emission tests and improvements on the difficult "heater" heat exchanger which has plagued the Philips design. DOE is contributing about $1.6 million to this project in a cost-sharing program during FY 78.33
- Development of an organic Rankine device to increase the efficiency of a truck diesel engine is also being supported. This combined-cycle design would replace the truck's muffler with a boiler for the organic fluid,

2. About $12 million will be spent on new heat engines during FY 78 by the "heat utilization" section of the Office of Conservation.[34] Projects funded in this area will include support for two high-temperature expanders which might be used for combined cycles, support for designs which will increase the pumping efficiency of engines .35 Research on small devices will include the development of efficient steam turbine systems in the 2 to 6 MW range and studies of Stirling engine applications. The Stirling work will include studies of designs suitable for solar applications as well as designs compatible with total 500 to 2,000 horsepower energy systems in residences and industry. It is hoped that a Stirling device for utility applications could be produced commercially by 1982.[36] Work on Stirling engines is also underway in DOE's Office of Nuclear Energy Programs, DOD, NASA, and the National Bureau of Standards, but conservation and solar applications officials claim there is little duplication. 37
3. Work is also being supported which will examine engines for topping or bottoming cycles for utilities and for industrial processes. Therm ionic devices for high-temperature topping is being supported with the objective of actually operating a device in a boiler by 1980.[38] Three different designs for organic Rankine cycle devices are being supported for use with medium-temperature waste heat streams. Work on low-temperature systems is beginning, although its exact structure seems somewhat vague.

Work on advanced heat engine designs is also being supported by the Fossil and Nuclear Energy Office of DOE. These de-

[31] ERDA Budget Estimates (Amended FY 78), Book 1, p 57

[32] Ibid , p 96

[33] Division of Transportation, Office of Conservation, DOE

[34] ERDA Budget Estimates (Amended FY 78), p 80

[35] Ibid., p 82

"John Belding, Research and Technology Division, Office of Conservation, DOE, private communication, 1977

[37] George Pezdirtz, Off Ice of Conservation, private communication, 1977

"ERDA Budget, p 86

signs are, almost without exception, applicable only to large central power applications. The fossil energy coal program has requested $25.5 million in FY 78 budget authority to develop advanced power systems including combined cycle and Brayton cycle devices. 39 The Nuclear Research and Applications Office of DOE is financing two studies into Stirling engines, one totaling almost $5 million to develop a Stirling isotope power system, contracted with General Electric, and the other with Mechanical Technologies, Inc., totaling more than $1.5 million.

In addition, Nuclear Research and Applications is funding a $2-million-a-year study by Garrett Air Research, Inc., of Phoenix to develop a 1.3 kilowatt Brayton isotope power system, as well as a similarly financed study by Sunstrand Corp to develop an organic Rankine device, also for a 1.3 kilowatt system. Both are due to be demonstrated during 1978; Nuclear Research and Applications officials say the choice will then be made between the two systems 40

PHOTOVOLTAICS

A well-designed photovoltaic program must maintain a careful balance between basic research, development improvements to current manufacturing processes, and engineering work on practical system designs. This is a difficult task since the field is changing very rapidly It would be tempting to delay major decisions in the area until research work has sorted itself out, but it should be possible to design a balanced program, supporting production and demonstration work in areas where prospects of success seem particularly high while continuing to give support to advanced concepts. (At a minimum, there seems to be no point in waiting for "research breakthrough" from arty of these devices without supporting a vigorous research program,)

There is room for a considerable amount of research on the basic physics and chemistry of photovoltaic devices. Serious work in the area of developing materials for terrestrial solar cells has been underway for only about 5 years. Work on the crystallography, electrical, and optical properties of silicon and other photovoltaic materials could be extremely useful. The properties of amorphous materials, which may have applications in photovoltaic devices, are still largely unknown,

The variety of cell designs which have been proposed for use in inexpensive flat arrays and in various types of concentrators is discussed in detail in chapter X. Many advanced cell concepts are receiving minimal Federal support.

Finally, a number of fundamental questions about the most effective use of photovoltaic equipment must be resolved. Detailed system design work will need to be done on the following topics:

- Mounting and support (e. g., should low-cost cells be used as a building material ?).
- What kind of cell cooling should be used ?
- How should the systems best be integrated into existing utility systems? Should onsite or utility storage be used? Should the system sell as well as buy from an electric utility? Should an electric backup or onsite generator burning fossil fuel be used when solar resources are not available?
- How often should the devices be cleaned ?

In the near term, it will be necessary to design practical and reliable systems for remote (often unattended) installations

STORAGE

The present DOE storage program is dominated by two objectives 1) developing very large storage systems capable of operating in electric utilities to "level" the loads met by these utilities, and 2) the development of

[39] Fossil Energy, ERDA Budget, p 45
[40] Robert Morrow, NRA, 1977

batteries for electric vehicles. Relatively little work is being conducted expressly for solar energy or for other onsite applications. There is, for example, presently no technique for adequately evaluating the complex issues of load management, transmission, and economies of scale for an integrated energy system.

Simple systems for storing relatively low-temperature thermal energy or chilled liquids in tanks, ponds, and aquifers — systems which appear very promising in the analysis conducted in this report — have received relatively little support or interest, An enormous amount of fundamental work in thermochemical storage systems remains to be done, and a number of known reactions have been characterized well enough to merit accelerated engineering development work, A number of simple systems for storing high-temperature energy in latent and specific sensible and latent heat have never received serious engineering design work. A number of other advanced storage systems (batteries, flywheels, and other devices) could also profit from greater attention.

Background on Federal Storage Programs

In the Division of Energy Storage Systems of DOE, a program has been developed to investigate a variety of thermal and chemical storage techniques. The main objective of these studies is to examine the feasibility of storing heat or electricity in order to level the loads of major utilities, although the technologies developed will probably be directly applicable to solar energy systetms for which the storage requirements are similar. Research will be required, however, to adapt such systems to solar applications. Adaptation may be particularly difficult for onsite systems which may have storage requirements many times smaller than the smallest utility units tested under this program.

The storage program has an objective of developing batteries with an overall efficiency of 75 percent, and a 10-year installed lifetime (approximately 2,500 deep cycles), at a cost of less than $30 per kWh of storage capacity. This program is also supporting research to develop inexpensive and efficient inverters for turning d.c. into a.c. power; such systems are needed to make efficient use of batteries. Again, the primary objective is the development of technology for utility load leveling.

The electric vehicle storage program in the Division of Energy Storage Systems is examining a number of advanced batteries which have low cost and low weight, and which last 4 years. In normal use the technology which DOE apparently feels has most promise in this area is the lithium/iron sulfide battery, although different pairs of reactors are being sought. Three firms fabricated such devices and delivered them to DOE for testing in FY 7841 DOE's utility battery program has the objective of producing batteries capable of 75-percent efficiency and 10-year lifetimes in normal utility applications. Work on a large battery storage test facility in New Jersey financed jointly with the Electric Power Research Institute began in FY 77.[42] The first batteries in this realistic utility environment will be lead acid batteries, but advanced batteries (probably zinc-chloride and sodium-sulphur batteries) will be tested in the next phase. Lithium/iron sulfide devices may be installed by FY 81. DOE is officially optimistic about the potential of these batteries and believes that the goal of $30 per kWh of capacity can be achieved.

Solar technology could also make profitable use of the variety of advanced energy storage techniques being considered in the Division of Energy Storage Systems. Hydrogen production and storage, underground pumped hydroelectric storage, underground compressed air storage, flywheels, and magnetic storage are all receiving at least some attention in the current program. Many of the secondary objectives of the energy storage program are also directly relevant to solar technologies. For example, the pro-

[41] ERDA Conservation Budget FY 78, revised p 22ff
[42] Ibid

gram to increase the efficiency of building space-conditioning **and the use of industrial process heat through the judicious use of thermal storage techniques has clear relevance to solar programs. Major field tests of seasonal and load-leveling storage for buildings are being conducted with the objective of improving the efficiency of conventional heating and cooling systems by 10** percent, and a major portion of the FY 77 funds for thermal storage **were used to start work on seasonal storage and structural materials with thermal storage properties for use in buildings.**

ISSUE 12

Should funding levels in DOE programs correlate to relative estimated contribution of different technologies?

Tables I II-4 and I II-5 compare the percentage of DOE solar funding given to three major solar energy applications with projections of the potential energy contribution of each solar application in the year 2000. No clear correlation is apparent. Electricity generated by solar systems, for example, is expected to represent only about 34 percent of the total contribution of solar equipment in the year 2000 but is receiving 64 percent of the funding, while industrial process heat is expected to provide 52 percent of the energy generated **by solar equipment while receiving only 4 percent of the funding.**

DOE has given solar electric power "highest priority" in its planning because of its potential as an "inexhaustible resource" and, it is claimed, it will "be given priority comparable to fusion and the breeder reactors."[43] Solar thermal systems, however, are relegated to a lower priority and characterized only as technologies which should be pursued only to "provide an energy 'margin' in the event of an **R&D failure in other areas."[44]**

[43] ERDA-76
[44] Ibid

Table ill-4.—Authorizing Appropriations for the Energy Research and Development Administration, U.S. House of Representatives, 95th Congress {1st Session], Conference Report No. 95-671

Demand sector	Total U.S. demand for primary energy in 2000		ERDA goals for energy provided from solar energy* sources in 2000	FY78 Budget Authority (millions of dollars)
	high demand estimate	low demand estimate		
Residential and commercial heating, cooling and hot water	31(29%)	23(40%)	2(18%)	96.4(30%)
Industrial & agricultural process	34(31%)	22(40%)	3(27%)	10.3(3.1%)
Electricity	68(63%)	47(81%)	0.5(4.5%)	216.1(67%)
Total energy in sectors listed above**	108(100%)	58(100%)	11(100%)	322.8(100%)

SOURCES: High demand estimate from ERDA 48 Vol1 pB 11
Low demand estimate based on a 1000 demand scenario constructed by the Institute for Energy Analysis
FY78 Budget Authority from U S House of Representatives Conference Report Authorizing Appropriations for the Energy Research and Development Administration October 6 1977 p 61 E R DA solar production goals collected and reported in Solar Energy Applications — A Comparative Analysis to the year 2020 Summary Report Draft July 1977 prepared by the Mitre Corporation Metrek Division

Table 111.5.—Authorizing Appropriations for the Energy Research and Development Administration, U.S. House of Representatives, 95th Congress [1st session], Conference Report No. 95-671

	Operating expenses	Capital equipment	Plant	Total
Heating and cooling of buildings	**94.4**	2.0		96.4
Agricultural and industrial process	10.3	0		10,3
Solar electric	210.7	5.4	41	216.1
Heating & coolng	**94.4**	2.0	**0**	96.4
Agricultural and industrial process	10.3	0	**0**	10.3
Solar thermal	61.1	3.0	41.0	105.1
Photovoltaics	76.2	0.3	0	76,5
Wind	35.3	1.4	0	36.5
Ocean thermal	2.8	0	0	2,8
Satellite power systems	2.8	0	0	2.8
TOTAL SOLAR ELECTRIC	210.7	5.4	41	256.9
Biomass	20.5	0.5	0	21.0

It is difficult to evaluate those arguments since a comprehensive plan for integrating Federal and industrial investments in solar research has not been developed, and there is no clear technique for determining when the time has arrived for Federal research support to be phased out and other types of nontechnical support initiated. I n addition, there has never been a comprehensive examination by DOE of either the economies and diseconomies of scale in solar technology or the relative merits of direct-thermal, electric, and combined electric and thermal operations.

ISSUE 13

The Solar Energy Research Institute, in its present operating relationship with DOE, may not be sufficiently independent of DOE to effectively meet its responsibilities in reaching the objectives set forth by Congress in the Solar Energy Research, Development, and Demonstration Act of 1974.

In the Solar Energy Research, Development, and Demonstration Act of 1974, Congress found that "it is in the Nation's interest to expedite the long-term development of solar energy, " and ". that the Nation undertake an intensive research, development, and demonstration program" in solar energy, As a consequence, Congress declared that it was the policy of the Federal Government to "pursue a vigorous and viable program of research of solar energy .; and provide for the development and demonstration of practicable means to employ solar energy on a commercial scale. " To enable the Nation to fulfill this policy, Congress established, in the same Act, the Solar Energy Research Institute (SE RI) to "perform such research, development, and related functions" as determined by the DOE, "or to be otherwise in furtherance of the purpose and objectives of this Act. " In other words, it was the intent of Congress that SE RI, while providing support to DOE, should also be able to provide independent direction and assessment of the Nation's effort to develop solar energy. This was reiterated at oversight hearings held a year after the passage of the Act. There it was stated that Congress intended that SERI be "highly visible" and be an institute symbolic of the "national will and the national effort"

toward solar energy, It is clear, therefore, that the Congress did not want SERI to be completely dominated by any other organization responsible for portions of the Federal solar energy program.

Since the startup of SERI nearly 1 year ago, however, it appears this intent is not being met. I n particular, the present method of funding SERI is to enact a "tax" on other programs under the Assistant Secretary of Research and Technology. No separate line item for SE RI appears in the budget; this severely limits the ability of Congress to directly evaluate the effectiveness of SERI through the budget process. Furthermore, it is not clear whether SERI can report directly to Congress without DOE approval and c learance.

SERI must maintain an ability to fairly assess and, if necessary, criticize the direction DOE takes on developing solar energy, if it is to fulfill the original intent of the Act. A clear congressional reaffirmation of SERI's responsibility and mission and separate funding status within the DOE budget, would contribute significantly to SERI's independence In addition, it may be desirable to establish a more direct link between Congress and SERI to emphasize the intent of Congress that SERI be a "visible" and "symbolic" institute of the Federal policy toward development of solar energy and not simply another group to carry out current DOE pollcy

ISSUE 14

Staffing Limitations

A persistent shortage of professional staff has been a major constraint on DOE's ability to adequately manage the rapidly changing and growing solar program. The FY 76 solar budget, for example, was $116 million, but only 46 staff professional positions were allowed. This amounted to just over $2.5 mill ion per professional. The problem became even worse in FY 77, with a budget of $290 million to be spent by 54 professionals — amounting to nearly $5.5 million per professional. The management of such large amounts of funding is particularly difficult in solar energy technologies, where the typical contract is much smaller than the average contract grant made by other sections of DOE.

The staffing shortage can create two types of problems:

1. It makes it difficult for DOE to react to a large number of innovative ideas and increases the temptation to spend funds in a small number of major and predictable projects rather than in a larger number of smaller projects some of which may have a higher risk.

2. It necessitates transfer of the detailed management responsibility to organizations outside the DOE's Solar Energy Division.

The problem associated with short staffing have been aggravated by demands placed on staff by the continuing, extensive public and congressional interest in solar energy which is floodin, DOE with inquiries, Much of this difficulty has been relieved under a grant to Franklin Institute, which has set up a toll-free number (800-523-2929) to answer inquiries about solar energy.

Chapter IV

ONSITE ELECTRIC-POWER GENERATION

Chapter IV.—ONSITE ELECTRIC-POWER GENERATION

Page

Background 115
Capital Costs 118
Generating Plants 118
Storage Devices. 119
SolarCollectors 123
OtherAspectsofCapitalCost Comparisons 124
Waste-HeatUtilization 125
OperatingCosts 129
Reliability 129
Siting Problems 133
MiscellaneousOperatingProbiems 134

LIST OF TABLES

TableNo. Page

1. 1985 Generation Costs as a Function of PlantSize. 118
2. Impacts of Energy Storage on Electric PowerSystems. 123
3. Load Factors forTypical Buildings 126
4. OperatingCosts of VariousSystems 130
5. Engine Requirements for Systems Designed to Provide ReliabilityEquivalent to Utility Power Reliability. 131
6. Reliability of Onsite Equipment 132

LIST OF FIGURES

Figure No. Page

1. Trend in Self-Generation 115
2. Data From Steamplant Surveys, 1965-77 . . . 120
3. Steamplant Survey Results Showing Average Unavailability Versus Size for Plants Completed During the Survey Period. 122
4. Historic and Projected Load Factors of Utility Generating Facilities 125
5. Components of a District Heating System in Sweden 128
6. Annual Operating Costs Versus Equivalent Full-Power Hours of Operation for Baseload Plants 131
7. Space Requirements of Typical Combined-Cycle Plants. 135

Chapter IV
Onsite Electric-Power Generation

BACKGROUND

While most electricity generated in the United States originates in large, centralized facilities owned and operated by electric utilities, the number of onsite generating plants has declined steadily and the average size of utility generating plants has steadily increased. Figure IV-1 shows, for example, that onsite generating equipment represented nearly 30 percent of all U.S. generating capacity in 1920 but only 4.2 percent in 1973. ' The percentage of electricity generated in plants with a capacity greater than 500 MW, however, increased from **40 percent in 1965 to 56 percent in 1974.2**

Since many of the benefits and problems of onsite solar equipment are shared by on site generating devices of all types, an examination of the potential market for the solar equipment must determine whether any of the economic and institutional circumstances which produced the trend toward centralization might change during the next two decades. There are two reasons for undertaking an examination of this rather fundamental issue. The most obvious is that the ways in which energy is produced and consumed around the world will need to change dramatically during the next three decades, if only because reserves of inexpensive oil and natural gas will vanish during this period. These changes will require a reevaluation of all conventional assumptions about energy. Secondly, the prospects for onsite generation may be improved by newly developed technologies—especially solar energy equipment. The solar resource is inherently distributed and economies of scale are often difficult to identify.

Figure IV-1.—Trend in Self-Generation

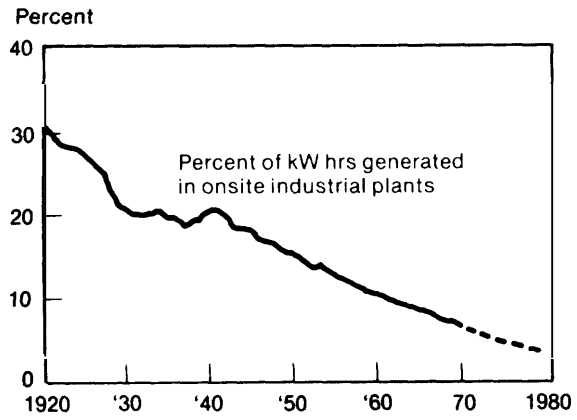

SOURCE: Edwin Vennard "A Study and Forecast of the Electric Power Business," Report for the Charles T. Main Engineering Co., Nov. 1, 1973.

There are a number of explanations for the trend toward centralization:

- **Larger equipment tended to be less expensive per unit of installed capacity**
- **Larger plants tended to be more efficient in their use of fuel and had lower maintenance costs per unit output, since a relatively small number of trained operators could reliably maintain large generating plants.**
- **Larger plants could be installed in remote locations, simplifying siting problems and ensuring that pollutants would be released at a distance from populated areas.**
- **In recent years, a major advantage of large plants was their ability to use coal instead of oil and gas as a fuel. The delivery of coal to a large plant, using a dedicated rail facility, could significantly reduce the effective cost of coal fuel.**

[1] Federal Power Commission News Release, May 6, 1975, p. 4.

[2] Federal Power Commission, *Statistics of Privately Owned Electric Utilities in the United States*, 1974, p. XLII.

- Onsite facilities were frequently unable to compete with "promotional" rates charged during the periods when utilities were enjoying declining marginal costs. Under those circumstances, all utility customers benefited from increased sales, since average rates declined as utility sales expanded.
- Many companies were reluctant to invest in onsite equipment because they were unable to finance a large fraction of the equipment with their own equity, They were forced to turn instead to debt financing, which had the effect of increasing company vulnerability during periods of economic hardship, This meant that greater returns were expected of onsite generating equipment than were expected of investments in product-oriented areas.
- There was a fear that a failure of onsite equipment could have disastrous effects on the operation of a business, and a feeling that the headaches of electricity production should be left to the utilities, whose primary business was energy.
- Electric utilities have frequently opposed the installation of onsite generating facilities by industry and have often been reluctant to own such equipment themselves.
- Many onsite facilities have been poorly designed and have received inexpert maintenance, and reports of failures have frightened prospective investors.
- Onsite generating equipment has tended to be of somewhat archaic design.
- Federal and industrial research has concentrated almost exclusively on the development of improvements in large centralized equipment rather than in systems optimally designed for onsite generation.
- Onsite equipment in some installations has created problems of noise and local pollution, and some owners have encountered difficulties in expanding generating facilities.

One of the major objectives of this study is to determine whether there are or will be circumstances under which the advantages of onsite energy equipment, particularly solar energy equipment, can outweigh this rather impressive set of traditional reasons for avoiding onsite equipment. It is interesting to observe that many nations which have experienced higher fossil fuel prices than the United States make far greater use of onsite electric power. For example, 29 percent of the electricity generated in West Germany is produce d by onsite industrial plants. [3]

Onsite equipment can offer a number of advantages:

- Location of equipment "onsite" g r e a t l y increases the design opportunities and makes it easier to match energy equipment to specific onsite energy demands. In particular, it should make it easier to use the thermal output of solar collectors and the heat rejected by electric generating systems which is typically discarded (often at some environmental cost) and wasted by central generating facilities. There is a considerable amount of overlap between equipment being developed for energy conservation and onsite generating devices, and onsite designs are usually most successful when integrated into a coherent plan encompassing both energy demand and supply.
- The basic solar energy resource is available onsite whether it is captured or not. Integrating the equipment into the wails or roof of a building or into the landscape around a building can reduce the land which must be uniquely assigned to solar energy. Onsite generation of energy can reduce the cost of transporting energy and reduce the losses and environmental problems

[3] R Sukhuja, et al (Thermo-Electron Corp), *A Study of Inplant Electric Power Generation in the Chemical, Petroleum Refining, and Paper and Pulp Industries,* June 1976, pp 1-4

associated with transmission. (The extent of these savings can be difficult to compute, and this topic is treated with greater care in chapter V.)

Ž Onsite equipment can reduce investment risks, because it can be constructed rapidly and additional units can be installed quickly to meet unexpected changes in demand.

• Onsite equipment can be made as efficient as centralized equipment, even if no attempt is made to use thermal energy exhausted by generating devices, If this heat is applied usefully, overall efficiencies as high as 85 percent are possible.

• High-efficiency energy use, possible with combined electric and thermal generation, can result in a reduction of polluting emissions produced by onsite devices burning conventional fuels.

Ž Onsite equipment can be manufactured, installed, and maintained without major changes in the way energy-related equipment has been handled in the past. It would not require novel approaches to financing, new types of businesses, major new categories of labor skills, or major participation by the Government.

In addition, there may be social, strategic, or political reasons for trying to reverse the trend toward increasing centralization of energy production in the United States which have no direct connection with the economic merits of the case. Some of these issues are discussed in chapter VI 1.

In assessing the relative merits of large and small equipment, it is necessary to judge both as a part of an integrated energy system. Reviewing the performance of units operating in isolation can be very misleading.

In particular, it is necessary to distinguish between the advantages enjoyed by large energy systems, which result from economies of scale in individual devices, from the advantages resulting from the fact that the large systems meet a demand relatively free of the sharp demand peaks which characterize individual energy customers. The smooth demand results from combining many customers into a single diverse load, and this advantage could be enjoyed by small generating centers able to buy and sell energy from a large energy transmission and distribution system.

Since the primary objective of improving an energy system is to reduce the net price paid for energy by all consumers, it is necessary to try to show how each component will affect the overall price of meeting real fluctuating demands for energy throughout the year. This clearly is not a simple undertaking, particularly since so many changes can be expected in the way energy will be generated and used during the next few decades. Many new technologies will undoubtedly emerge in generating, storage equipment of all sizes, and in the technology of energy transport.

Energy can be transmitted in electrical, thermal, or chemical form, for example, and stored as mechanical, thermal, or chemical potential energy Energy can be generated at a central facility and sent for storage in onsite units (it is common in Europe, for example, to store electricity which will be used for space heating in the form of heated bricks), and energy generated locally could be sent to a central facility for storage

optimizing the combination of onslte and central energy devices will be difficult because of the many variables and uncertainties, but the outcome of this analysis can profoundly affect perceptions about the relative value of different types of equipment and it can affect the designs chosen for onsite systems These issues are treated in more detail in the next chapter

CAPITAL COSTS

The only satisfactory technique for comparing the cost of onsite and centralized power generation is to undertake the detailed comparison of life-cycle costs of integrated systems which is undertaken in detail in volume 11. It is interesting to notice, however, that there frequently is no clear correlation between the size and the unit cost of generating and storage components. Comparisons between different sizes of equipment based on the same basic design can be misleading; it is important to compare the costs and performance of devices selected to perform optimally at the size range selected.

GENERATING PLANTS

Table IV-I indicates that the initial costs of onsite generating equipment may actually be less than the cost of larger plants per unit of generating capacity.

Table IV-1 .—1985 Generation Costs as a Function of Plant Size (1975 dollars)

Plant type	Initial capital cost dollars/kW	Fuel cost mills/kWh heating value	Efficiency (%)	Fuel cost (mills/kWh)	Operating & maint. costs (mills/kWh)	Capital charges (mills/kWh$_e$)	Total cost (mills/kWh$_e$)
New central station baseload plant*							
100 MW coal plant	400-800	3.24	38	8.5	1.3	9-27	(19-37)
Transmission and distribution	300-400	-	91	0.8	1.4	14-19	(16-21)
Other central station costs	8.5	-	-	-	2.0	0.1	(2.1)
Total central plant costs	908-1208	3.24	35	9.3	4.7	23-46	37-60
Industrial Plants							
10 MW combined cycle (oil)	360	5.5	48	12	3	8-12	23-27
10 MW combined cycle (oil prices triple)	360	16.5	48	36	3	8-12	47-51
10 MW gas turbine w/waste heat boiler	350	5.5	68	8	3	8-12	19-23
Small Generating Equipment							
100 kW diesel w/waste-heat boiler (oil)	400	10	56	18	5-10	17-28	40-56
5 kW gasoline engine	280	17	12	141	10-20	9-16	160-177
Possible Future Systems							
100 kW Phillips-type Stirling (mass-produced)	50-200	10	40	25	5-10	1.7-6.8	32-42
5 kW Ericsson device (mass-produced)	50-200	10	50	20	1-10	1.7-6.8	23-48
5 kW inverted gas turbine with waste-heat boiler (mass production)	50-200	10	68	15	1-10	1.7-6.8	18-32

*NOTE: The delivered cost of energy will be higher than the costs computed here since some energy must be provided from relatively expensive peaking plants or storage facilities.

Assumptions —capital charges 0.15% annually
—oil costs utilities and industry $1.60/10^6 Btu and individuals $2.80/10^6 Btu
—coal costs $0.95/million Btu
—gasoline costs 60¢/gallon
—plant-load factors 0.5–0.75 (large and intermediate)
0.3–0.5 (small systems)
—transmission and distribution system-load factor 0.35

SOURCES: Central station costs based on *Statistics of Privately Owned Electric Utilities: 1974*, Federal Power Commission. Pages XXXV, XXXVI, XXXVII, XXXIX, XLII, XLIII. 1976 fuel prices, and generating and transmission efficiencies are assumed. Other costs based on estimates documented in later sections of this chapter.

Review of Electrical World's Steam Station Cost Surveys for the past 22 years' showed that, from 1965 to 1975, there was no significant decline in capital costs of steam plants of all types as their size increased. Figure IV-2 shows costs per unit of generating capacity as a function of plant size for steam plants completed from 1965 to 1977 Only the 1977 survey gives any inclination of economies of scale, and the limited number of plants in that summary compared to previous surveys makes it very difficult to conclude that economies Of scale may again be valid.

Another trend determined in this review is that unavailability frequently increases as size increases, resulting in higher effective capital costs (figure IV-3). It should be noted that the stations reviewed in these surveys are new, and the availability problems may result in part from breaking in the new plants

While small units manufactured in small numbers may be substantially more expensive per unit output than large systems, the cost of small systems can be substantially reduced using mass production techniques unsuitable for larger devices. Moreover, investments in large generating facilities are so substantial that very conservative design practices must be used. Smaller systems permit greater experimentation, and, in many cases, innovations can be introduced into the market more rapidly, Conservative design practices, however, play a large role in determining which device will be selected for mass production

STORAGE DEVICES

It is difficult to generalize about the economies of scale of storage since the value of storage is a strong function of the cost of transporting energy and the strategy of its use Many types of storage are constructed from modular units and do not show strong economies of scale.

In most cases, low-temperature thermal energy can be stored much less expensively in large systems than in small storage tanks, This is because the ratio of the surface area required for a vessel containing a heated fluid to the volume of the fluid stored decreases as the volume increases. A low ratio means that less material will be required for the storage vessel and that the area over which heat can be lost to the environment per unit of energy stored is reduced.

In some very large systems, no insulation will be required other than dry earth. The advantage of large-scale storage of hot water would be increased significantly if techniques for storing hot water in aquifers can be developed. Taking advantage of this opportunity requires a piping network capable of delivering fluids to the central point.

Systems for storing energy at high temperatures (e.g., above 300 OC/5720 F) typically consist of a large number of relatively small modules, and large devices do not show economies of scale. In many cases, the storage must be located close to the site where the energy will eventually be used. For example, electricity can be "stored" in bricks, heated to high temperature, which are used to provide space heating for buildings during periods when electric rates are high. Such devices must be located in the buildings they serve.

No clear pattern of cost emerges for devices capable of storing energy at intermediate temperatures.

Most of the techniques which have been proposed for storing electricity in mechanical form (in hydroelectric facilities, for example) are only feasible in relatively large units, although it may be possible to use the numerous small dams which already exist around the country for small amounts of storage. Battery systems now available for

[1] 10th through 19th Steam Stat Ion Cost Survey, Electrical World, Oct 7, 1957, p 115, Oct 5, 1959, p 71, Oct 2, 1961, p 69, Oct 7, 1963, p 75, Oct 18, 1965, p 103, Oct 16, 1967, p 99, Nov 3, 1969, p 41, Nov 1, 1971, p 39, Nov 1, 1973, p 39, Nov 15, 1975, p 51

Figure IV-2.—Data From Steamplant Surveys, 1965-77

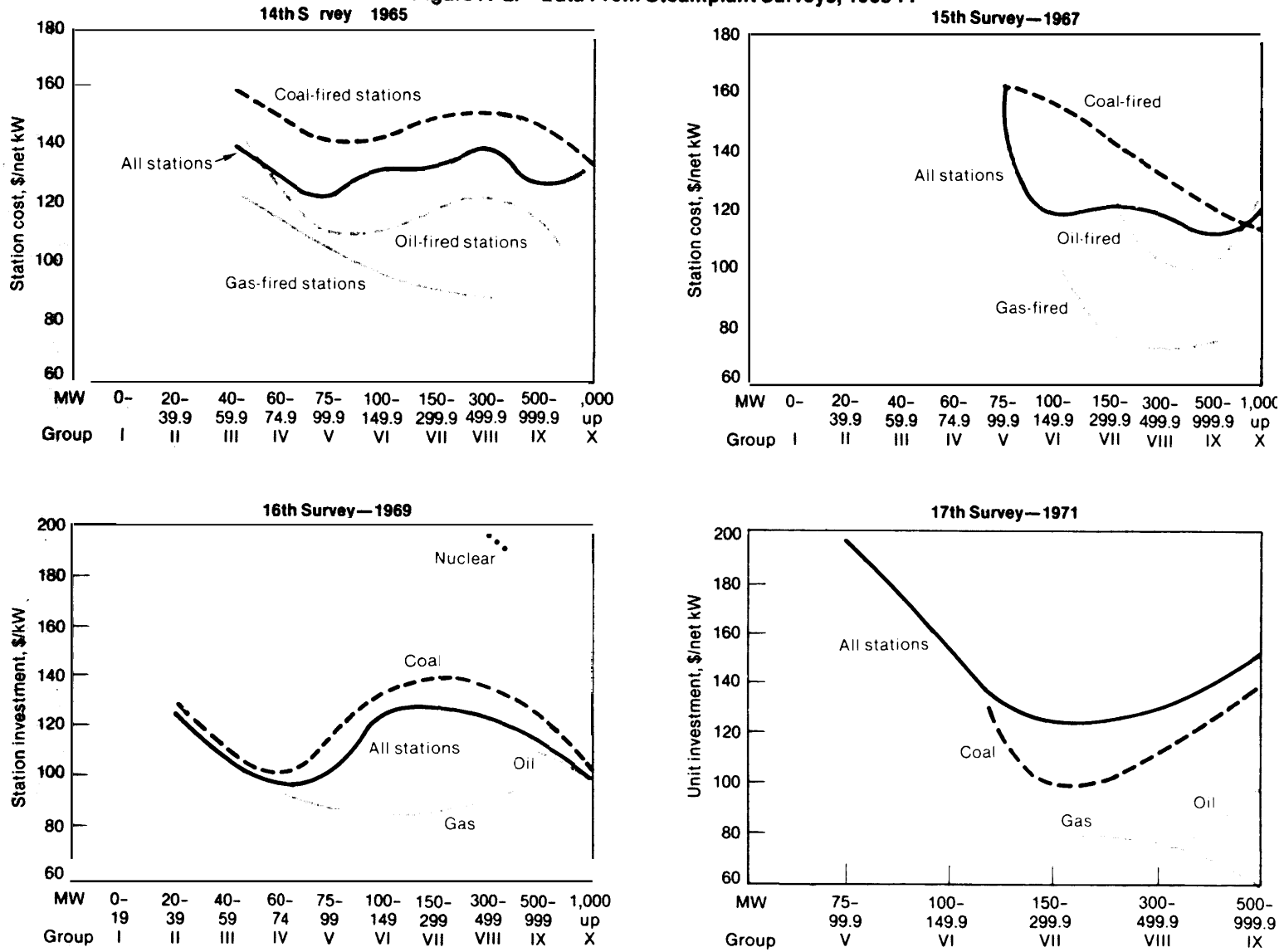

Figure IV-2. (continued)

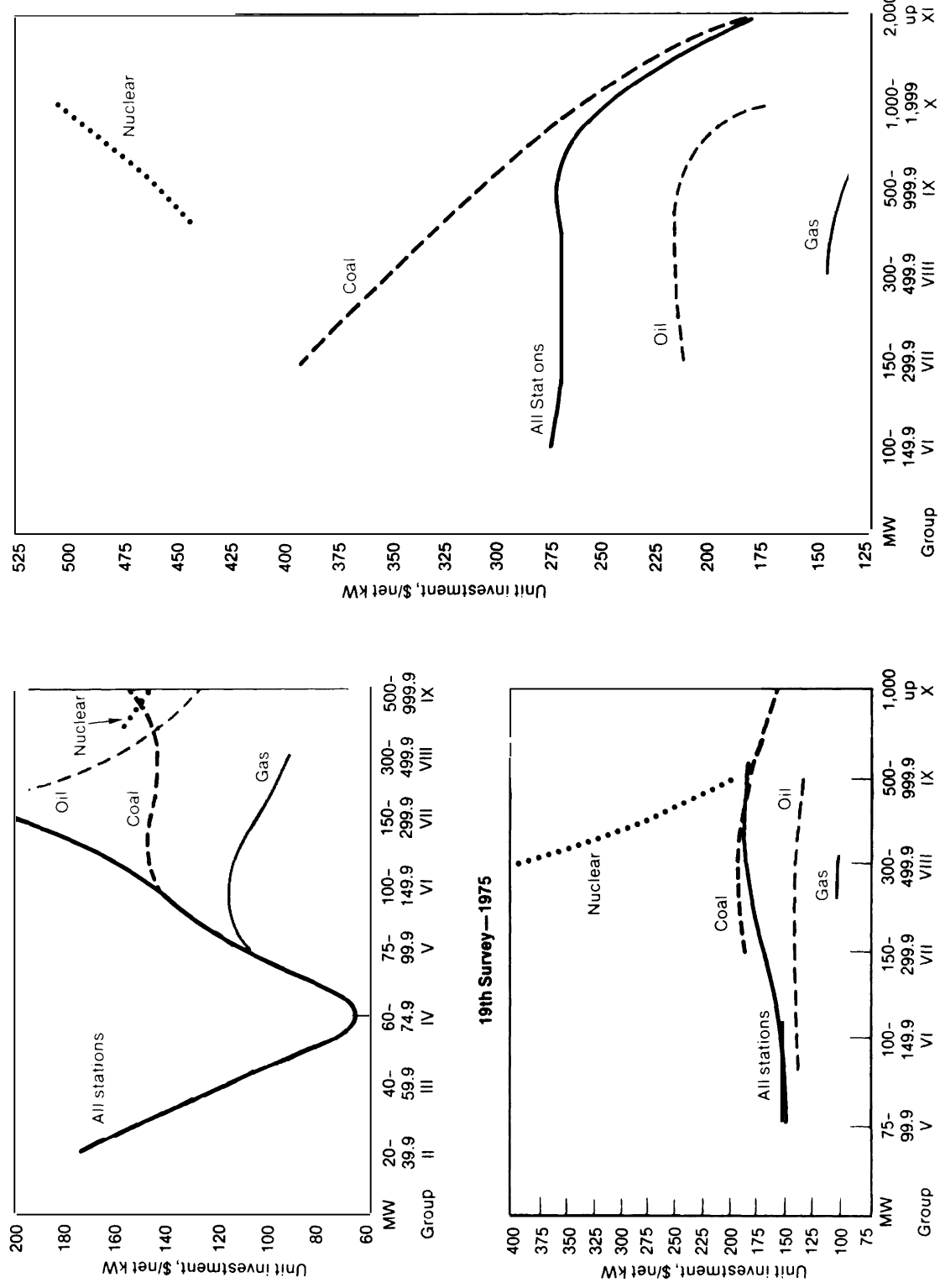

SOURCE: *Electrical World.* Data from steamplant surveys from 1965 to 1977 showing unit investment versus size for steamplants of all types completed during the survey period.

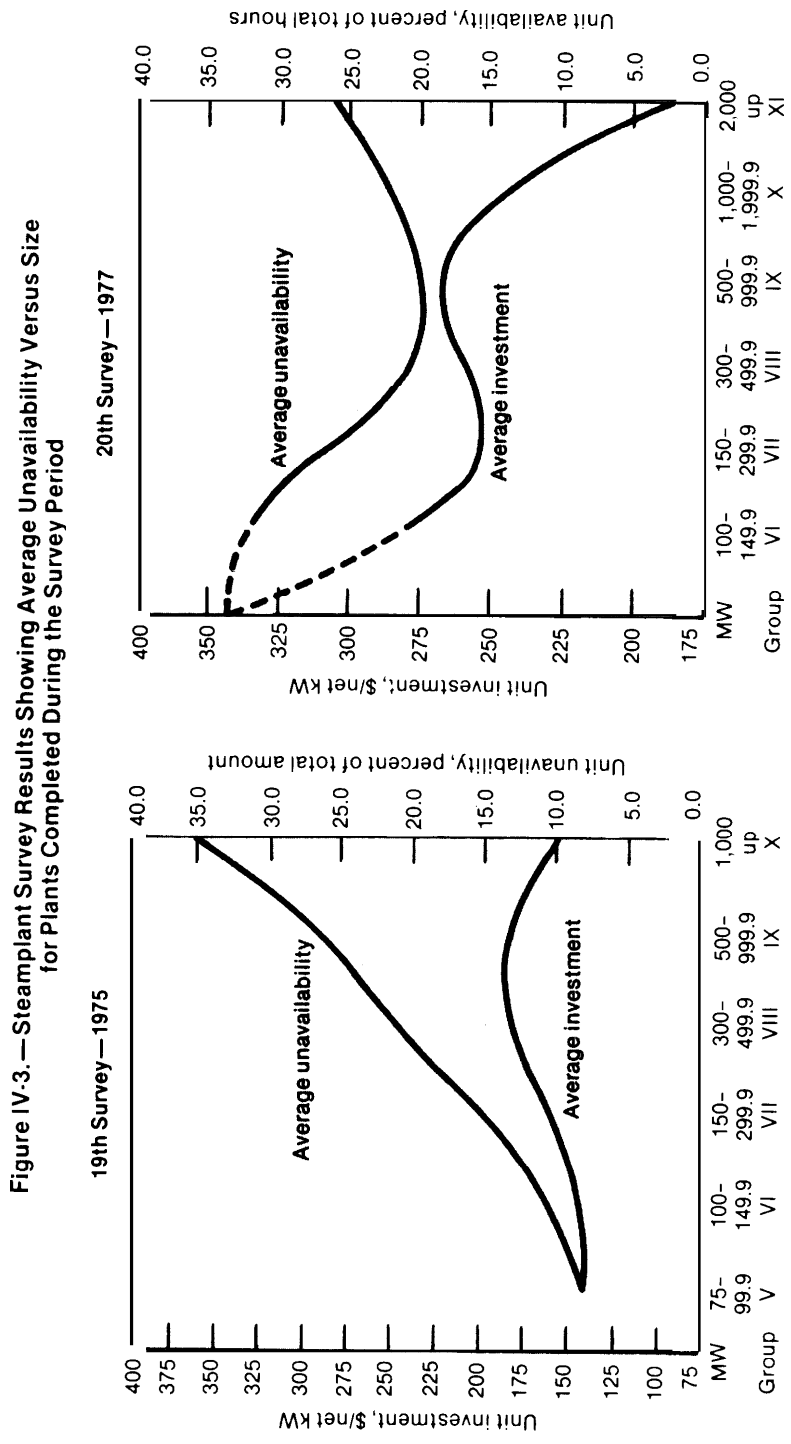

Figure IV-3.—Steamplant Survey Results Showing Average Unavailability Versus Size for Plants Completed During the Survey Period

SOURCES: "19th Steam Station Cost Survey," *Electrical World*, Nov. 15, 1975, p. 51.
"20th Steam Station Cost Survey," *Electrical World*, Nov. 15, 1977, p. 50.

storing large amounts of electricity for utilities are more economical in relatively large units (several megawatt hours), although economies of scale disappear long before capacities equivalent to those of large hydroelectric storage facilities are reached.

In the future, **however, it may be possible to develop low-cost batteries for which there is no particular advantage in designing units larger than a few hundred kilowatt hours.** This cannot be said **for most other types of chemical storage systems. Large-scale storage of hydrogen or other gasses, for example, can probably be best accomplished in large underground chambers.**

The economies of scale of storage devices is discussed in detail in chapter XI.

Onsite or regional storage facilities also offer a number of other advantages which are not directly reflected in initial costs of the systems. Table IV-2 summarizes the benefits of centralized and decentralized energy storage **devices identified in an exam i nation of alternative techniques for storing electricity for utility use.**

SOLAR COLLECTORS

Since most types of solar collectors consist of arrays of individual devices with individual areas less than 30 square meters (m'), there is no clear economy of scale for most types of collector arrays. An optimum size for a heliostat central receiver system will **probably be established as the costs of these systems are better understood, but it is not clear whether a large penalty will have to be paid if the system is not at the optimum size. Similarly, a system which requires piping to connect a series of distributed thermal collectors will probably have an optimum size since these plumbing costs will become large for large systems.**

Pond collectors and several other specialized collector designs may also show some economies of scale up to 2,000 to 3,000 m^2, but again, the penalty for building a smaller system may not be large. Much more must be known about the economics of collector devices before confident statements can be made in this area.

Table IV-2.— Impacts of Energy Storage on Electric Power Systems

	Impacts	Economic benefits*
Central energy storage	Improved baseload capacity factor	Low-cost charging energy
	Conservation of oil, natural gas	Reduced fuel costs
	Reduction of spinning reserve	capital cost credit ($20-40/kvv)
	Higher reliability/reduced reserve margin	Capital cost credit (to be determined)
	More efficient load folowing	Capital cost credit (to be determined)
Dispersed energy storage	All of the above, plus:	All of the above, plus:
	1. Deferral of new transmission and distribution lines	Capital cost credit ($50-100/kW)
	2. Deferral of substation reinforcement	Capita l cost credit ($30-60/kW)
	3. Misc. (transmission and distribution loss, volt-ampere reactive control, short circuit)	Capital cost credit ($10-20/kW)
	4. Increased security of supply/reduced reserve	Capital cost credit (to be determined)
	5. Rapid installation (factory built)	Reduced interest during construction
	6. Modular/incremental capacity growth	High capacity factor of storage

"Probable ranges; actual benefits depend on specific conditions in individual power systems.

SOURCE: F. R. Kalhammer, *Impacts of Energy Efficiency on Electric Power Systems,* American Nuclear Society Meeting, San Francisco, November 1975.

OTHER ASPECTS OF CAPITAL COST COMPARISONS

The cost of equipment purchased for a largeplant will always reflect the advantage of discounts resulting from large purchases. These savings occur because the manufacturer's marketing costs and other overhead costs are lower for large sales than for a number of small purchases. Larger systems may also benefit because there is no need to perform detailed engineering for each installation, as may be the case for some onsite energy systems.

Taking advantage of the ability to best integrate an onsite generating system with the climate and demand pattern at each site could, however, add to the engineering cost. Contractor overhead charges tend to be slightly higher for smaller systems. Generalizations are difficult, however, since it may be possible to develop standardized designs for small systems.

Ease of rapid construction of small generating and storage facilities reduces the interest paid during construction —charges which represent about 18 percent of the cost of new electric-generating plants capable of generating 1,000 MWe. [5] Rapid construction also means that the effects of inflation are easier to assess. Inflation occurring during the construction of a 1,000 MWe generating plant which would come online in 1983 is expected to represent about 30 percent of the total value of the plant.[6]

Short construction times can also provide much greater flexibility in meeting new demands.

This advantage is particularly significant when rapid fluctuations in the growth of demand make predictions difficult. Plants which require only a month to construct require predictions to be accurate only a month into the future. Moreover, a mistake in forecasting is far less costly if the investment is limited. The economic benefits of large plants which require many years to construct depend heavily on the accuracy of demand predictions covering periods of a decade or more. Utilities can react to unexpectedly low demand by delaying or deferring plant construction, but this process can be costly–with the cost depending on the amount of capital invested before the deferral. Forecasting mistakes can mean plants in operation which are badly underutilized, yet inaccuracies are inevitable given uncertainty about the future of energy supplies, costs, and demands.

In the period 1973-75, demand did not rise as rapidly as expected. Demand has fallen far below the predictions and, as a result, many utilities had far more capacity available than they could profitably employ. The disastrous effect of inaccurate predictions on the growth of electrical demand made during this period was reflected in the decline in load factors and a rise in gross peak margins (see figure IV-4). Both features indicate a serious underutilization of installed capacity, Utility commissions increased rates to permit these companies to remain solvent (although in many cases the utilities argued that these rulings still preclude profitable operations).

Load factors for small systems (defined to be the peak output potential of the generating system divided by the annual average output) vary widely because of the erratic nature of onsite energy demands. While many large industries operate at virtually full capacity throughout the day (and thus have relatively constant electric and thermal demands), small industrial plants, commercial buildings, and residences can have very uneven demands.

The irregular demands lead to relatively poor utilization of the generating equipment. The problem usually diminishes as the size of the total demand increases since large loads typically are an aggregation of a number of small loads. Unless the small loads all change in unison, peak individual demands will not all occur at the same time and the ratio of peak to average demand

[5] *WASH-1230* Revised

[6] Ibid

Figure IV-4.— Historic and Projected Load Factors of Utility Generating Facilities

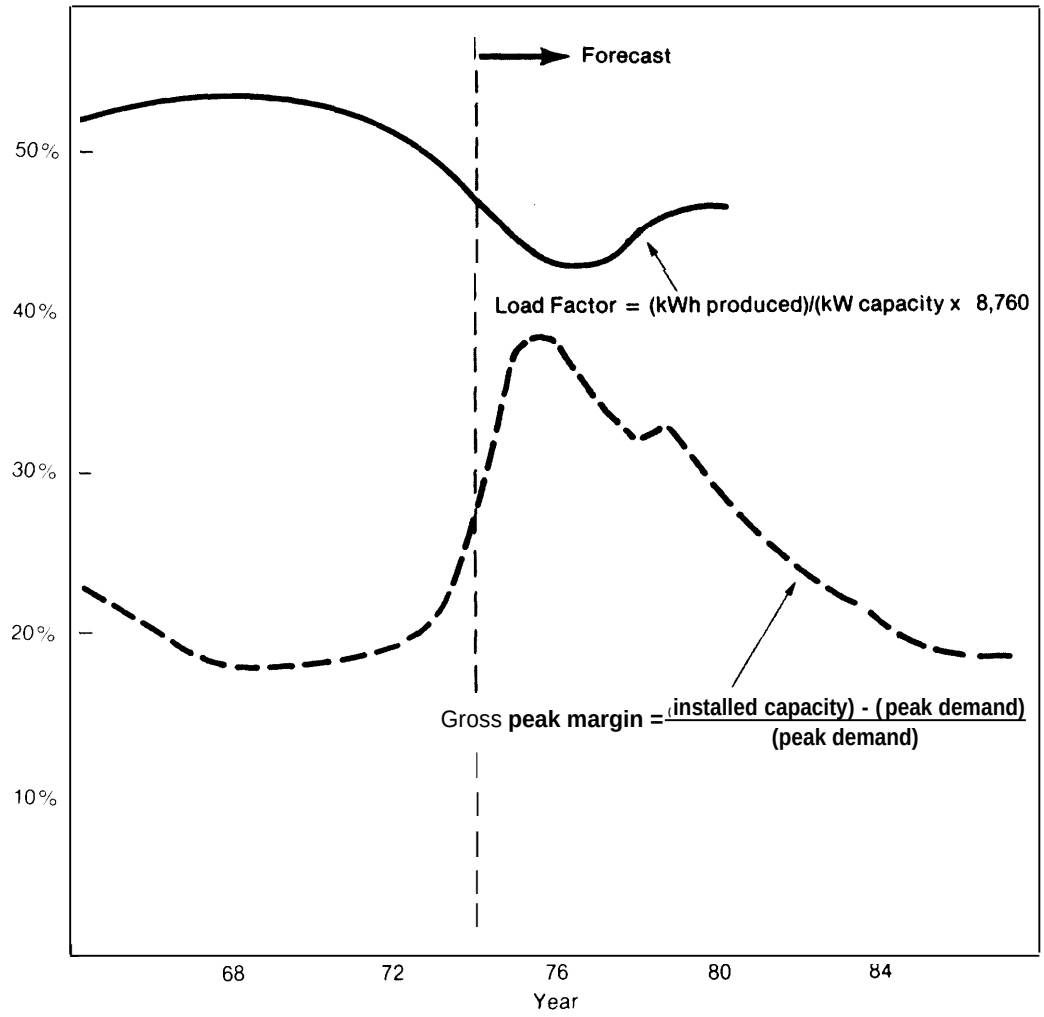

SOURCE 26th Annual Electrical Industry Forecast, ' *Electrical World*, September 15, 1975, p 46

will be less (This can be seen by noticing that the load factors **shown in table IV-3 increase with the size of the buildings served.) Since the improvement is greatest when the largest possible number of loads are connected, utility load factors are almost always higher than onsite load factors, It is important to notice that this advantage is attributable to the size** of **the grid interconnection and not to the size of individual generating facilities.**

WASTE-HEAT UTILIZATION

One major advantage of onsite generation of electric power is that an opportunity is provided **for making use of thermal energy usually wasted by central electric-generating facilities. From 60 to 80 percent of the energy consumed by conventional generating equipment is lost into the atmosphere or nearby bodies of water, causing thermal**

Table IV-3.—Load Factors for Typical Buildings

	Albuquerque	Boston	Ft. Worth	Omaha
1. Single Family House				
—gas heat, h.w. & a/c	26.3	25.5	26.6	28.1
—gas heat, h.w. & electric a/c	24.7	15.5	26.6	21.9
—electric resistance heat & h.w. & electric a/c	18.3	21.9	17.0	20.1
—heat pump, electric h.w. & a/c	14.5	16.8	15.8	16.3
2. Single Family House with Extra Insulation				
—gas heat, h.w. & a/c	26.1	25.3	26.4	25.9
—gas heat, h.w. & electric a/c	28.6	21.2	29.0	23.5
—electric resistance heat & h.w. & electric a/c	16.7	20.1	18.6	18.9
—heat pump, electric h.w. & a/c	14.5	17.7	19.0	16,9
3. High Rise Apartment				
—gas heat& h.w.,central elec, a/c	32.7	18.9	30.1	23.$
—electric resistance heat & h.w., central electric a/c	25.5	27.5	28.4	26.5
—electric resistance heat & h.w., window a/c	24.1	26.8	26.0	25.5
4. Shopping Center				
—gas heat & h.w., central electric a/c	40.2	—	36.9	35.1
—electric resistance heat & h.w., electric a/c	44.7	—	39.1	36.2
5. Industry				
—one shift	22	22	22	22
—three shifts	67	67	67	67

NOTE: The characteristics assumed for the buildings and heating and cooling equipment used by the buildings are described in detail in chapter IV of volume IL In computing the load factors for industry, it was assumed that the facility operated at 70 percent of peek capacity during active shifts and that the plant was shut entirely for 2 weeks during the year.

pollution in areas close to these plants. Approximately 17 percent of the energy consumed in the United States in 1972 was wasted in this way and estimates show that this fraction will rise to 25 percent by 1985, when the United States is expected to be more heavily dependent on electricity. [7]

At the same time, enormous amounts of steam are generated for space conditioning and industrial processes. These applications are inefficient uses of the fuel consumed because the end requirement is generally for a much lower grade of heat than the fuel utilized is capable of providing. The heat exhausted by e lectric-generation prime movers can be used for many commercial and industrial applications to produce an overall efficiency of energy use in the range of 70 to 85 percent. The implementation of this technology could both reduce demands for fuel and the demand for new capital in the electric utility industry. (Both commodities are in short supply.) It has been estimated that if large-scale industries gen-

[7] *ERDA-48,* Vol 1, appendix B

erated al I of their own electric-power requirements by 1985 and **served their process-heat requirements with waste heat, where possible, the Nation would save 1,45 Quads* per year** [8]

Systems which make use of this "waste heat" are conventionally called "total energy" or " cogeneration" systems. A typical system is shown in figure IV-5. Equipment **for total energy plants has been available for many years, but use of such systems has declined In 1972, only about 0.2 to O 3 percent of the U. S electric- generating capacity made use of waste heat. [9] This decline has resulted both from an overall reduction in onsite power and from the fact that electric sales have been more profitable than steam sales [10] The use of large, remotely located, electric-generating plants has, of course, made thermal distribution unfeasible in many cases. Total energy systems are still widely used in Europe and the Soviet Union.**

There is an enormous demand for thermal energy in forms which are available from total-energy systems In 1973, for example, nearly 14 percent of the energy consumed **in the United States went into space heating, and 23 percent into industrial process heat.** [11]

Analysis of the economic attractiveness of both solar and nonsolar total-energy systems depends on whether the overall cost savings (e.g. , the amount by which the savings i n electricity or fossil-fuel costs exceed the cost of owning and operating heat-recovery units) will result in an acceptable rate of return to an investor, I n both cases, **the issue depends crucially on the balance between thermal and electrical loads.**

Total energy is not commonly used in residential applications because of the large daily and seasonal variation in thermal loads, In spring and fall, for example, there is a far smaller demand for thermal energy than during the winter and summer months. In the high-rise apartment studied in this assessment, for example, the ratio between energy required for electricity and the energy required for heating and hot water varied from 0.21 in January, when the heating load was maximum, to 1.5 during the spring and fall, when the primary requirement for thermal energy was hot water. Only about 5 percent of the 550 total energy plants operating in the United States in 1972 were installed in residences. The Department of Housing and Urban Development (HUD) is, however, conducting a large field experiment (MI US) with a total energy system serving a mixture of residential structures and commercial facilities.

Total energy or cogeneration systems are likely to be relatively more attractive in sites where there is a consistent demand for heat. Buildings such as laundries, hospitals, and the food, paper, refining, and chemical industries are prime candidates. Most of the large factories can be expected to operate on a three-shift schedule, permitting maximum utilization of the generating facilities, Many of the industries described use electricity in ratios amenable to cogeneration and can use steam at temperatures which can be conveniently supplied with cogenera - tion systems. The precise demands of buildings and industries of various types are discussed in greater detail in the section on "model building and industrial loads. "

Some care should be exercised in usin$_g$ the ratios which are developed for contemporary buildings and industries, since the thermal and electrical demands **could change dramatically as the result of conservation techniques and new technologies. Widespread use of electric automobiles, for**

---

* A Quad is defined as 1 quadrillion Btu's

[8] Energy I ndustrial Center Study, op cit , pp 6, 7

[9] P R Achenback and J B Cobel, *Site Analysis for the Application of Total Energy Systems to Housing Developments*, presented at the 7th I ntersociety E nergy *Convention* **E** ngineering Conference, San Diego, Calif, Sept **25-29,** 1972, p **5**

[10] Energy Industrial Center Study, op cit , p 21

[11] M H Ross and R H Williams, A *ssessing the Potential for Fuel Conservation,* The I nstitute for Publ ic Polic y Alternatives, State University of New York, Al bany, N Y , July 1, 1975, p 19

Figure IV-5.—Components of a District Heating System in Sweden

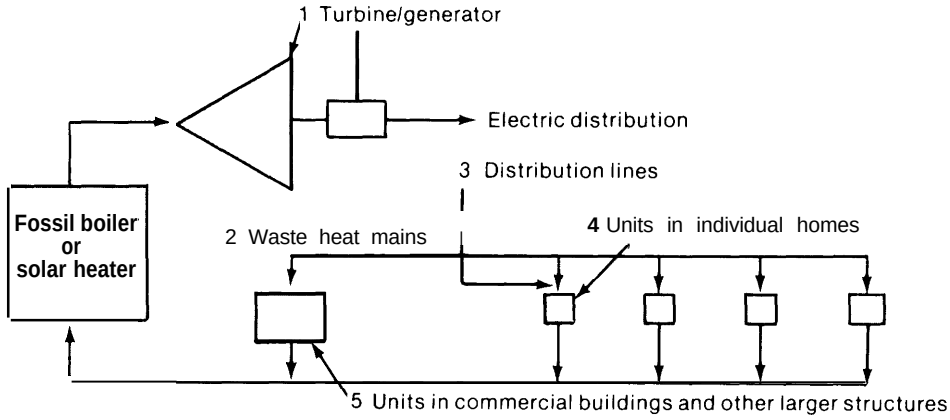



(1) District heating turbine plant delivered by STAL-LAVAL



(2) Installation of district heating mains out to Kallerstad, a new industrial area



(3) b) Plastic pipes (PEMX) with factory-added cellular insulation in corrugated polyethene protection pipe (Granges Essem)

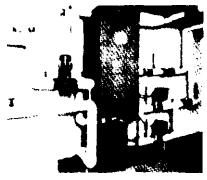

(4) Consumer service unit for private house



(5) Large substation in a school

SOURCES Figures (1)(2),(4), and (5) from "District Heating" Tekniska Verken ILinkoping AB [Sweden) Figure (3) from Margen, P H (Manager Energy Technology Division, AB Atomenergi,Studsvik R&D center, Sweden), "The Future Trend for District Heating, " page 68, presented at the Swedish Symposium on Combined District Heating and Power Generation Feb 2528, 1974

example, would increase the ratio of electric to thermal demand in residential buildings, and heat recovery units could reduce thermal demands,

OPERATING COSTS

Concerns about operating costs have been a major barrier to onsite equipment in the past, and badly designed systems have been plagued by expensive maintenance. Reliable data about the cost of operating small systems designed for continuous-power output are extremely difficult to obtain because of the small number of installations in most of this size range. A summary of information from a variety of sources is shown in table IV-4.

The greatest variation in the data occurs in the small size ranges, where some of the numbers are based on estimates made by designers, some represent attempts to operate systems designed for "backup power" operation in a continuous operation mode, and some are averages of widely varying operating experience. For example, the military standard for generator sets shows an engine life of 2,500 hours for 15 kW units and 4,000 hours for 100 to 200 kW units. [12] Daimler-Benz reports up to 20,000 hours of engine life for its 10 kW engine.[13] Operating cost will depend strongly on the installation, the skill of the operators, and the system design. In most cases, it will be extremely difficult to predict operating costs until some experience has been obtained with the particular application.

There is considerable variation in operating costs of larger powerplants (see figure IV-6), and it is difficult to choose a single number for comparative purposes. This is particularly true for nuclear plants, where experiences vary greatly and statistics on long-term operating costs are cliff i cult to obtain. It is interesting to note, however, that over half of the operating expenses of coal-fired plants are due to the cost of operating the boilers. Presumably, these costs would be eliminated in a solar system that did not rely on fossil backup, although the cost of maintaining the collectors would probably compensate for this savings.

RELIABILITY

Concerns about reliability have been a major impediment to onsite power generation. Onsite installations can, in principle, be made as reliable as utility power—or more reliable if enough redundant units are purchased or great care is taken in design and manufacture. In fact, redundant onsite power systems are occasionally used to provide realiable power when utility power is not sufficiently reliable. Achieving high reliability with redundancy is, of course, expensive (see table IV-5). It is possible, however, that a simple, mass-produced heat engine could be designed to operate with the reliability of a household refrigerator (which is a simple heat engine operating in reverse). Designers working on a variety of different onsite systems feel that this is not

[12] Military Standard, Electric Power Engine Generator Set, Family Characteristic Data Sheets, Mil-Std-633 A(MO), Oct 8, 1965 (Data provided OTA by the Aerospace Corporation)

[13] Mercedes-Benz Diesel and Gas Turbine Catalog, Vol 36 (Data provided to OTA by the Aerospace Corporation)

Table IV-4. —Operating Costs of Various Systems

Design type	operating and maintenance cost (c/kWh)	reference
A. Small systems (5-50 kW)		
—gas turbine	1.25	1
— diesel engine	0.4-2.4	2
— Stirling engine	0.74	3
—free-piston Ericsson	0.10	4
— air-conditioners	2-4	5
B. Intermediate systems (50-1,000 kW_e)		
—gas turbine	0.1-0.3	6
—gas turbine	0.25-0.4	7
—diesel engine	0.23	8
—diesel engine	0.27-0.55	9
—diesel engine	0.4	10
— gas engine	0.2-0.4	11
C. Larger systems (1 MW and larger)		
— large diesel plants	0.33	14
— new coal-fired turbines	0.12	13
— new nuclear plants	0.3	13

Notes for Table IV-4.

1. International Harvester, Sofar Division, private communication, March 1976.
2. Based on 2,500-10,000 hours between overhauls (estimate based on combination of data from Allis Chalmers, Detroit Diesel, and Daimler-Benz) assuming 30 percent of initial cost ($400/kW) is revested in each overhaul,
3. *JPL Program Review;* "Comparative Assessment of Orbital and Terrestrial Central Power Systems"' (Interim report), March 1976, p. 31. (Assumes a 15-year life and 1 man-hour every 3 months.)
4. Estimate by Glen Benson of Energy Research and Generation Corp., private communication, November 1976. (Assumes 1 mart-hour per year for maintenance.)
5. Based on maintenance contracts on 2-ton air conditioners which are assumed to operate at peak load--2 ,000 hours per year. Such contracts are sold by Sears for $60-$120/year (depending on the age of the system). It is assumed that an air-conditioning cycle, operating m reverse as a heat engine, is 17-percent efficient.
6. MIUS Technology Evaluation: "Prime Movers ORNL-HUD-MIUS-11,"' April 1974, p. 14.
7. International Harvester, Solar Division, private communication, May 1976.
8. *Diesel Engineering Handbook,* 1966(inflated by 6 percent for 10 years)
9. ''MIUS Prime Movers," *op. cit.*, p. 21.
10. Assumes 30 percent of capital cost (assumed to be $300/kW) is invested for each 30,000 hours of operation.
11. "MIUS," *op.cit.*, p. 14.
12. '<Statistics d Privately Owned Electric Utilities in the United States," 1974, *FPC*, pp. 36, 37, and 21.
13. "20th Annual Steam Station Cost Survey," *Electrical World*, November 15, 1977, p. 46.
14. Morgan, Dean T. and Jerry P. Davis, ''High Efficiency Decentralized Electrical Power Generation Utilizing Diesel Engines Coupled with Organic Working Fluid Rankine-Cycle Engines Operating on Diesel Reject Heat," 1974, pages 5-45, (Assuming a 60 percent load factor.)

Figure IV-6. —Annual Operating Costs Versus Equivalent Full-Power Hours of Operation for Baseload Plants

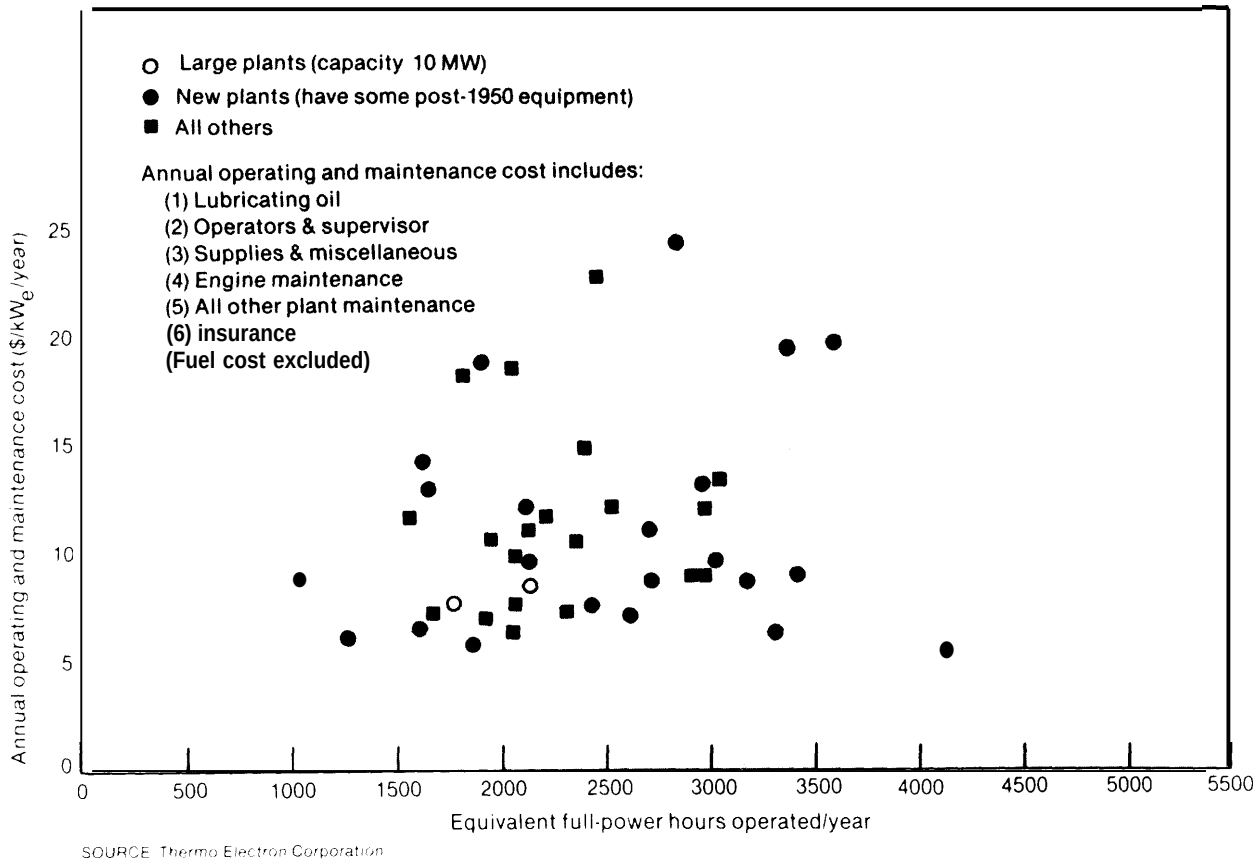

SOURCE: Thermo Electron Corporation

Table IV-5. — Engine Requirements for Systems Designed to Provide Reliability Equivalent to Utility Power Reliability

(Approximately 5 hours of outage per year, including failures in generating, transmission, and distribution equipment)

Number of engines in system	Fraction of peak load which can be met by each engine	Reliability required of each engine	Relative cost*
1	100%	0.999	1
2	100%	0.976	2
3	50%	0.986	1.5
4	50%	0.947	2
5	25%	0.992	1.25
5	33%	0.960	1.67

*The figures shown in this column may underestimate the added cost of multiple systems since smaller engines usually cost more per-unit output than larger devices and more complex control systems would be required for multiple units.

an unrealistic expectation. Photovoltaic devices, of course, are capable of extremely high reliabilities so long as adequate attention is paid to environmental protection in the initial installation.

Statistics on the reliability of onsite equipment are difficult to obtain and even more difficult to interpret since performance depends so heavily on the quality of the system's design, the skill with which the system is maintained, and local operating conditions. The situation is further complicated by the fact that most onsite generator systems are not designed for continuous operation and are meant only to provide emergency backup power. Some available data is summarized in table IV-6. A recent survey found that piston-engine generator sets used by the U.S. Army, for ex-

Table IV–6. — Reliability of Onsite Equipment

Engine type	Forced outage rate (%)	Scheduled outage rate (%)	Overall availability	Mean time between failures	Average repair time (hrs)	Reference
Diesel and gas turbines	1	3	.96	-	-	1
Piston engines	-	-	-	500 hrs	2.5	2
750 kW gas turbine	-	-	-	700 hrs	6.4	2
5 MW gas turbine	-	-	-	1.8 yrs	23.5	2
Large marine diesels	-	-	(more than .96)	-	-	3
Large diesels	1-4*	-	-	1.2-1.3 yrs	-	4

*Assuming an average repair time of 100 hours.

References

1. MIUS Technology Evaluation: Prime Movers, ORNL-HUD-MIUS-11, April 1974, pp. 57-60.
2. R. W. Parisian, Power *114*(1), 45-27, January 1970.
3. F. M. Swengel, Power Engineering 72(3), 38-40, March 1968.
4. Gamze, *ibid*.

ample, have a "mean time between failures" of about 500 hours, [4] Diesels and gas turbines, in the range of 50 kW to 1 MWe, however, average 1.2 years between failures.[15 16] Gas turbines typically operate 20,000 hours (2.3 years) without overhauls, even in installations where they must operate unattended, and 40,000 hours between failures have been experienced on some systems. " prototype Stirling engines have operated 10,000 hours without failures in bench testing.[18] Free piston Ericsson-cycle devices, if designed properly, should be able to operate with very high reliability because of their inherent simplicity, the small number of moving parts, and the fact that no seals around rotating shafts are required. The reliability of diesel equipment depends on whether the system has been designed for continuous operation and on the revolutions-per-minute (r/rein) of the device. Low r/rein systems which are designed for continuous operation can typically require one relatively inexpensive overhaul, costing about 10 percent of the initial investment each 10,000 operating hours, and a major overhaul costing 20 percent of the investment each 20,000 operating hours. Almost all reliable data deals with systems larger than 50 to 200 kWe and little data exists for very small systems.

Standards for reliability cannot be measured in any systematic way. Requirements will differ from customer to customer. Some industries, for example, would face catastrophic losses if they lost power for an extended period (say several hours), while residential customers might not be willing to pay a premium for extremely high reliability. One of the disadvantages of providing power from a centralized utility grid is that all customers must pay for a high system reliability whether they need it or not. On-site generation would permit much greater flexibility in this regard.

Utilities currently try to maintain enough capacity to ensure that failure of the generating plant will curtail power for no more

[14] M/US Technology *E* valuation: Prime *Movers,* OR NL-HUD-MIUS-ll, April 1974, pp 57-60

[15] Ibid

[16] M Gamze "A Critical Look at Total Energy Systems and Equipment, " Proceedings, the 7th Annual I ECEC Conference, San Diego, Calif, Sept 25-29, 1972, p 1266

[17] Robin Mac Kay, "Generating Power at High Efficiency, " Power, June 1975, p. 87

[18] R C Ullrich (North American Philips Corporation), private communication, October 1976

than 2.4 hours per year. (This is a typical working **figure, but standards vary. Southern California Edison Company, for example, uses a standard of 1 hour in 20 years)[19] It has been argued, however, that this standard for generating reliability is too high, and that the last few hundredths of a percent of reliability are enormously expensive, 20 particularly since the transmission and distribution system is usually less reliable than the generating plant The effect may not apply to all utilities, however, and optimal expansion plans may well result in maintaining very high reliabilities in some instances.**

Analysis of the requirements of different types of customers in this regard is almost nonexistent It is difficult to anticipate how much different customers would be willing to pay for reliability If they were given a choice The costs of providing high-reliability service could be reduced, **for example, if the customers were wi l l ng to accept lower reliabilities during predictable periods — such as during peak-demand hours — or dur**ing maintenance cycles

The requirement for providing high reliability with onsite equipment can be relaxed considerably if the utility grid can be **used to provide complete ''backup' when failures occur or when systems are disassembled for routine maintenance The impact of providing this backup power on utility costs is a complex issue and cannot be treated in detail in this paper**

It is clear, however, that a small number of customers requiring backup would not have a major impact on utility operation, and that a large number of customers with small backup requirements would not pose a problem since failures would be distributed at random, Some correlation with peak-demand periods could be expected (Solar outages due to variations in sunlight would, of course, be correlated, but failure of equipment should be similar to other types of onsite failures,) A small number of very large users would, however, pose a serious problem if they depended on utilities for complete backup. I n such cases, provision would have to be made for drastic reduction of onsite demands whenever the onsite generating equipment failed. The presence of electric storage, either onsite or in the utility grid, could do much to alleviate the problems of unanticipated equipment failure

I t seems, **therefore, that onsite equipment can provide any desired level of reliability If a premium is paid, if the utility is used to provide backup power,** or if the optimistic expectations of system designers are realized, **Existing** equipment can provide a very **high level of reliability without redundancy, although the exacting standards of utility power cannot be matched, The seriousness of this f a i l u re wou ld have to be judged o n a case-by-case basis, Unfortunately, there is little operational experience for most promising onsite equipment, and basic long-term concerns are unlikely to be finally resolved before an adequate base of experience with these systems has been developed**

SITING PROBLEMS

In recent years, many utilities have experienced major problems in finding suitable sites for generating facilities A large number of new regulations and requirements have greatly increased both the cost and the time required to justify a proposed site. In most cases, lengthy environmental impact statements must be filed. A great

[19] Jerry Braun, Southern California Edison Company, private communication, May 1977.

[20] Michael L Tolson, "The Economics of Alternative Levels of Reliability for Electric Power Generation Systems," *The Bell Journal of Economics*, Vol 6, No 2, Autumn 1975, p 697

variety of local and nationally based groups have legal standing orders to contest siting plants and rulings.

Most small plants would be required to go through many of the procedural steps required of the larger plants, and less effort may be required to justify the installation of a single large plant **in a remote area than to justify several small facilities in areas where local protest would be likely to develop. On the other hand, the onsite generating equipment might face far fewer objections than the large sites for a variety of reasons:**

- **Each plant would be relatively small, and the impact on the local environment would usually be slight.**
- **In the case of** cogenerat ion and total energy systems, **energy would be required onsite for heating and industrial applications, even if no electricity were generated onsite, and thus the incremental impact of equipment and emissions traceable to electric generation wou ld be small,**
- **It could be plausibly argued, in most cases, that the impacts of alternatives to onsite generating facilities would be more severe than those imposed by the on site design.**
- **Onsite facilities would not require a major dislocation of populations, no construction camps would be required, no new roads or new waterways would be necessary, etc.**

Large solar-electric systems, which require large amounts of land in a single area for collectors, could also face serious siting problems. Smaller onsite solar systems, which could be integrated into the buildings or immediate region being served with solar energy, would undoubtedly face far fewer objections,

MISCELLANEOUS OPERATING PROBLEMS

A major constraint to onsite power generation has been the reluctance of owners and managers of companies other than utilities to accept the burden of owning and operating complex electrical generating facilities; there has been great apprehension about maintenance costs, reliabilities, personnel requirements, and other technical uncertainties.

Operators of most commercially available generating equipment require extensive training, and in many jurisdictions, local codes set specific standards. For example, the District of Columbia requires operators of high-pressure steam systems, capable of generating more than 55 kW of thermal power (equivalent to about 15 kW of electric power) to hold a "second-class steam engineer's license. " Obtaining such a license requires 3 years of experience with steamplants having pressures greater than 15 psi and passing a special examination.21

Thus, qualified operators are **difficult to find and they command high salaries. Several steam-system owners have indicated fear about their vulnerability to losing a chief engineer with unique experience.**

Equipment has also been a problem; the market for onsite equipment is so small that little new design work has been done, Existing onsite generating installations are nearly all "one-of-a-kind" designs; they are often installed by engineers who do not have much experience in the area, and they frequently use equipment in ways not originally contemplated by the manufacturer. As a result, performance has often been disappoint ing.[22]

---

21 "Operation and Maintenance of Boilers and E ngines and Licensing of Steam E ngineers," District *of Columbia* Register, Washington, D C

22 Maurice G Gamze, "A Critical Look at Total Energy Systems and Equipment, " Proceedings, the 7th Annual IECEC Conference, San Diego, Calif , Sept 25-29, 1972, p 1266

In some areas, suitable equipment of modern design is difficult to find. Most new boilers installed by industry, for example, are low-cost gas "package boilers" which are not compatible with the requirements of onsite electric power generation.[23] Small heat engines tend to be of older designs.

Building space may impose additional limitations (see figure IV-7). Electric-generating equipment would nearly double the space required for conventional heating and cooling equipment in a typical installation. The space requirements also make it difficult to expand capacity when requirements for electricity expand.[24]

The use of solar energy to operate onsite devices eliminates one of the major impediments to conventional onsite equipment — their use of relatively expensive liquid and gaseous fuels Table IV-1 indicated that fuel costs dominate the cost of providing power from small generating equipment even at current fuel prices In many cases, however, it may be attractive to try to provide backup for a solar-powered facility by burning a fuel during periods when solar energy sources are not available. It may be possible to develop boilers for small devices compatible with coal, waste products, and other "biomass" fuels The development of fluidized-bed boilers of various sizes may be particularly attractive for such an application. The development of such systems would, of course, also increase the attractiveness of onsite generating devices operating entirely from energy sources other than direct solar energy

[23] Edward J. Mitchell and Peter R. Chaffetz, *Toward Economy in Electric Power*, December 1975, p. 9.

[24] Gamze, op. cit., p. 1268.

Figure IV-7.—Space Requirements of Typical Combined-Cycle Plants

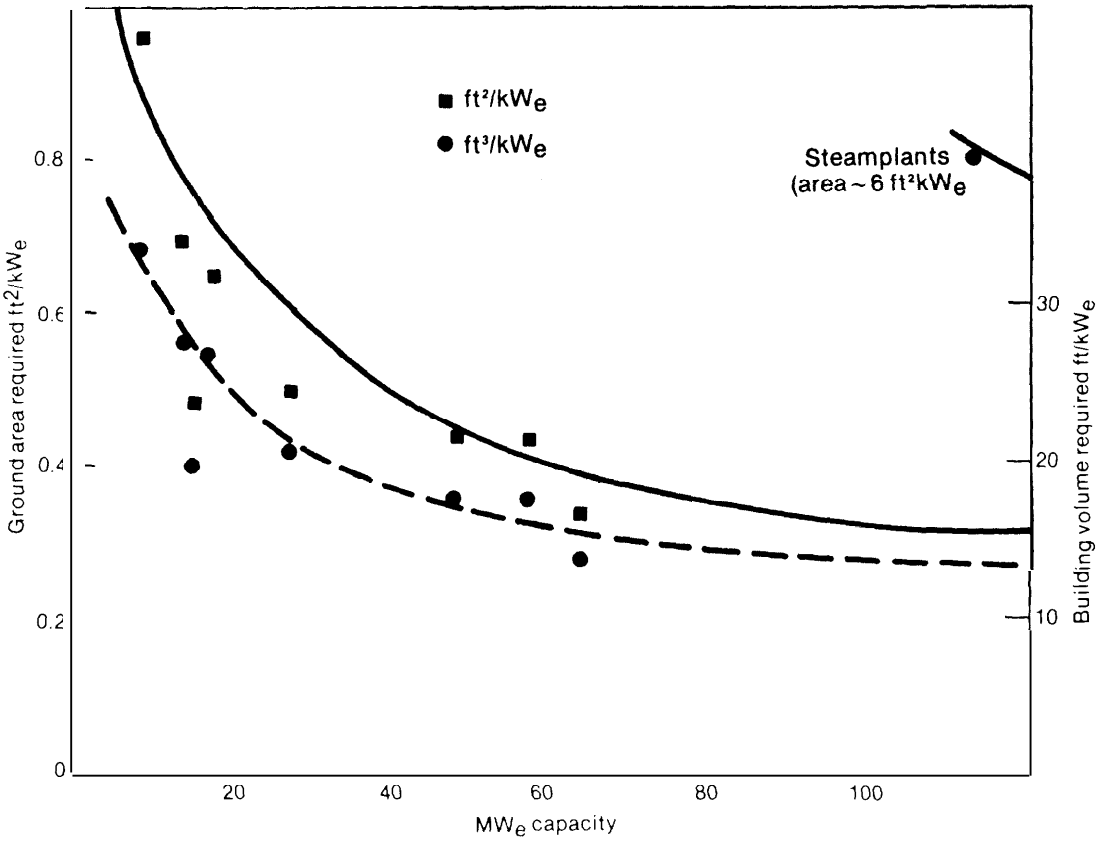

NOTE: 200 MW steamplants typically require 30-35 ft^3/kW_3 and 6-8 ft/kW.

SOURCE: Thermo-Electron Corp., "High-Efficiency Decentralized Electrical Power Generation..." New 1974 NSF Grant TE4186 27-75, p. 3-171.

"20th Steam Station Survey," *Electrical World*, Nov. 15, 1977, p. 58.

Chapter V

THE RELATIONSHIP BETWEEN ONSITE GENERATION AND CONVENTIONAL PUBLIC UTILITIES

Chapter V.– THE RELATIONSHIP BETWEEN ONSITE GENERATION AND CONVENTIONAL PUBLIC UTILITIES

Page

Background 139

Electric Transmission and Distribution 141

Thermal Transmission and Distribution 143

Sale off PowerGenerated Onsite 144
Metering ....., ...144
Safety 144
Quality of Power Fed Back to Utilities 145
Local Distribution Capacity 145
Economic Dispatch. 145

Control 146
Time-of-Day Pricing. 146
Storage Strategy 147
Load Management. 147
Offpeak Electricity 148

Ownership 148
Utility Attitudes 150

The Cost of Providing Backup Power From an Electric Utility 151

Backup PowerWithEnergy SourcesOtherThan Electricity 159

AppendixV-A.– Analytical Methods. 161

LIST OF TABLES

Table No. Page

I. A Comparison of the Cost of Transmitting and Distributing Energy in Electrical, Chemical andThermal Form 140
2. Construction Expenses of Electric Companies 142
3. District Heating Systems 143
4. The Capital Intensityof Major U.S. Industries 149
5. The Fractional Difference Between the Utility Costs[¢/kWh] Required to Provide Backup Power to the Systems Shown and the Costs to ProvidePower to a Residence EquippedWith an Electric Heat Pump 153
6. Levelized MonthlyCosts for a Well-Insulated Single Family HouseShowing the Effect of Marginal Costing for Backup Power 154
7. Ratio of Price Utilities Can Pay for Solar Energy Generated Onsite to the Price Charged by Utilities for Electricity. ..155
8. The Fractional Difference Between the Utility Costs Required To Provide Backup Power to the Systems Shown and the Costs of Providing Power to a High Rise Apartment Equipped With Central Electric Air-Conditioning, Electric Hot Water, and Baseboard Resistance Heating. 156
9. The Impact of Offpeak Storage on Utility costs 157
IO. Levelized MonthlyCosts for a Single Family House Showing the Effect of Marginal Costing and BuyingofOffpeak Power 158
11. Leveiized MonthlyCosts of Several Kinds of Energy Equipment in a Single Famiiy Detached Residence in Albuquerque, N. Mex.160
A-1. Average Characteristics of PrivatelyOwned Utilities in 1974 163
A-2. Numbers of Buildings in "Typical"Utility Modeled WhichUseHeating and Cooling and HotWaterEquipment 163
A-3. industrial Load Profile Used..... 164
A-4. Characteristics of Equipment Used in the Utility Model.... 170
A-5. Assumptions About the Nonconventional Systems Used in the Utility Impact Analysis 170

LIST OF FIGURES

Figure No. Page

I.improvement in the Pattern of Electricity Consumption in England's Southwestern Electricity Board Resulting From a Shift to Time-of-Day Electricity Rates 146
A-1. A Typical Load-Duration Curve for an Electric Utility 162
A-2, Ratio of PeakDemands to Average Demands as a Functionofthe Standard Deviation of ''Wake-Up''Times 165
A-3. Hourly ''Miscellaneous" Electric Load Profile for Single Family House With DifferentTypes of Diversity 166
A-4. inverted Load-Duration Curve of a Typical Electric Load. 168

Chapter V

The Relationship Between Onsite Generation and Conventional Public Utilities

BACKGROUND

The value of onsite energy systems cannot be addressed by examining their performance as isolated systems. While it is possible to construct onsite solar devices capable of operating with no connection to other power sources, it is seldom economically attractive to do so when other sources of power are available.

It is tautological that designing an optimum approach for providing energy in a given region requires that all equipment for installing and consuming energy be considered as components of a single integrated energy system designed to meet a fixed set of energy demands: maintaining building interiors at comfortable temperatures, providing lighting, supplying heat for industrial processes, etc. Any attempt to simplify the problem by considering the capabilities of components in isolation must result in a less efficient outcome. Moreover, it is likely that without taking this synthetic perspective, some critical aspect of the overall system will be neglected.

Performing this kind of analysis is difficult because of the complex and highly interdependent energy systems which have emerged over the past few decades, the variety of equipment which is currently in use, and the bewildering variety of devices now u rider test and development. This chapter provides a perspective on some of the major issues confronted in integrating onsite systems into larger systems for supplying energy and provides the basis for making realistic estimates of the cost of operating onsite equipment.

The design of an optimum energy network which includes onsite solar facilities requires choices in the following areas.

. How much of the backup energy should be supplied **from energy storage equipment, and** how much backup **energy should be supplied from convention l** energy sources? (This usually translates into determining **the opt i m u m size for onsite storage equipment)**

- Should conventional backup power be provided from electricity generated at a central generating facility or from fossil fuels burned onsite? (It should be noted that it is possible to use chemical fuels—oil, gas, alcohol, coal, etc.—to backup even solar electric facilities since a small emergency generator can be used when solar electricity is not available.)

- If electricity is stored, should it be in thermal, mechanical, or chemical form?

- Should the excess onsite energy be transmitted (in thermal, chemical, or electrical form) to a central or regional storage location or should it be stored where it is generated? (Energy generated at a centralized facility can be transported and stored in distributed storage facilities, and energy generated *in distributed* small facilities can be transported and stored in centralized storage facilities.)

- Should control over the onsite storage and generating equipment be exercised from a central point?

If it is possible to transmit energy inexpensively, overall energy costs can usually be reduced by connecting together as many energy consumers as possible. If onsite generating systems are not connected, each generating unit (solar plus backup) would have to be large enough to meet the peak demand of the building or industrial process which it is designed to serve. The load factors of individual buildings are usually very unattractive (see table V-1). Onsite load fac-

Table V-1 .—A Comparison of the Cost of Transmitting and Distributing Energy in Electrical, Chemical, and Thermal Form

Mode	Capacity	Capital cost	Efficiency	Load factor[1]	Operation and maintenance	Usable energy cost[2]
Electric transmission . (765kV, 500 miles)[3]	8.1×10^6 kW (3.25 lines equivalent)	$92/kW[4]--	0.95[5]	0.7	5.7×10^{-4}/kWh[6]	5.2×10^{-3}/kWh[7,2]
Natural gas transmission ..... (30 inches diameter, 800 PSI, 500 miles)[8]	8.1 + 10^6kW (1 line)	$17.6/kW[9]	0.98[10]	0.88[11]	3.8×10^{-4}/kWh[12]	9.1×10^{-4}/kWh[13]
Electric distribution... (10,000 customers—residential/commercial)	5×10^4kW (17.2×10^3kWh per customer)[14]	$130/kW[15]	0.94[5]	0.4	9.3×10^{-4}/kWh[16]	9.0×10^{-3}/kWh[7] (Total electricity = 0.0142)
Natural gas distribution ..... (10,000 customers—residential/commercial)	8.3×10^4kW (121 Mcf per customer)[17]	$50/kW[17]	0.98[10]	0.5	3.8×10^{-4}/kWh[18]	2.0×10^{-3}/kWh[13] (Total gas = 0.00291)
Hot water distribution..... (10,000 customers—residential/commercial)	7×10^4kW[19] (21.3×10^3kWh per customer)	$260/kW [19,20]	0.85[19]	0.35	2.6×10^{-3}/kWh[21]	1.8×10^{-2}/kWh[7]

NOTES:

1 A capital recovery factor of 0.15 is used to calculate annual capital charges.

2 Assumes a capacity of 2,500 MW for one 765 kv line.

3 Utility construction expenditures of $1,7 billion in 1975 for 3,762 additional miles or S461,000 per mile average. (*Statistical* Yearbook *of the Electric Utility Industry for 1975,* Edison Electric Institute, New York, N.Y , Oct. 1975.)

4 The 1970 *National Power Survey,* Federal power Commission, Washington, D. C., p.1-13-8, Dec. 1971.

5 Investor-owned electric utilities spent approximately $850 million on transmission O & M costs in 1975 for 1.5x10'Z kWh. *(Statistical Yearbook of the Electric Utility Industry for 1975).*

6 Assumes an end-use efficiency of 100 percent

7 *National* Gas Survey, U.S Federal Power Commission, Vol. 1, p. 34, 1975.

8 All natural gas companies spent $53 I million in 1976 for 1,845 miles of new transmission pipeline or $287,000 per mile average. (*1976* Gas Facts, American Gas Association, Arlington, Va., 1977).

9 F... percent of total natural gas consumed was used for pipeline fuel in 1976 This is equally allocated to transmission and distribution. (AGA Gas *Facts*).

10 *National* Gas Survey, U.S. Federal Power Commission, Vol. III, p. 129, 1973.

11 All natural gas utilities spent $1 1 billion in 1976 on O & M for transmission for 148 trillion cubic feet (TCF).

12 ASSUMES end-use efficiency Of 65 percent

13 "Residential Energy Use to the Year 2000: Conservation and Economics," Oak Ridge National Lab, Report ORNL/CON-13, Oak Ridge, Term., Sept. 1977,

14 Investor-owned electric utilities spent S2.8 billion on construction of distribution facilities for 21,700 kW of new capacity in 1975. (*Statistical* Yearbook of the *Electrical Utility Industry for 1975.*)

15 Investor-owned utilities spent approximately $1.59 billion in 1975 for distribution O & M costs for 1.5x10'2 kWh. (*Statistical* Yearbook *of the Electrical Utility Industry for 1975.*)

16 *Calculated* from the average cost of S400 per customer (Private communication—American Gas Association) with an average hot water and space heating requirement of 36.4x10] kWh (121 MCF) per year and an assumed load factor of 0.4.

17 All natural gas utilities spent S1.1 billion on distribution O & M in 1976 for 14.8 TCF (AGA *Gas Facts*).

18 *See* volume II.

19 "Evaluation of the Feasibility for Widespread Introduction Of Coalin- to the Residential and Commercial Sectors. " Exxon Research and Engineering Co., Linden, N. J., Vol. 11, p. 6.11, Apr. 1977. These two studies give a construction cost of about S14 million for the size system in question, which requires a peak capacity of 70,000 kW, as shown by reference in note 20.

20 Annual o & M costs are calculated by assuming they are 3 Percent of capital costs, which is the average of the percentages for gas and electric systems.

21 The cost of energy lost in transmission was estimated using 0.04c/kWh for electricity y and 1.5c/kWh for thermal energy,

tors can be as low as 15 percent, while typical utility load factors are 50 to 60 percent. Moreover, each onsite facility would have to provide enough redundant equipment to achieve acceptable levels of reliability. If an interconnection is available, however, it is necessary only that the combined output of all generating units in the system be able to meet the aggregate peak demand of the region. The aggregate peak will be lower than the sum of the individual peak demands since individual peaks will occur at different times (this is usually called "diversity" in the demand). The advantage of the connection is magnified by the fact that most generating devices operate less efficiently when operated to meet an uneven demand. Interconnections also permit greater freedom in selecting generating and storage equipment (onsite and centralized facilities can be selected as they are appropriate), and it is easier to optimize the efficiency of the total system throughout the year by controlling the performance of each system in the network in response to the total load.

The problem of uneven loads is a particularly difficult one in the case of electric utilities since generating and storage equipment tends to be extremely expensive, although chemical and thermal transport systems can also benefit from balanced loads. It may prove feasible, for example, to pipe hot water generated in collectors located on a number of separate buildings to a central thermal storage facility, If this storage facility is large enough, collectors need only have an annual output large enough to provide for heating and hot water requirements and storage losses. Such systems may require less collector area per building unit than conventional solar heating and hot water systems using relatively small amounts of storage.

While connecting energy generating and consuming devices into a single energy network can lead to significant savings, the transmission and distribution systems required can be extremely expensive. The costs of several types of energy transport systems are summarized in table V-1. Comparisons of this type can be somewhat misleading because costs will vary greatly from site to site, but the table at least allows a crude ranking of alternatives. It indicates, for example, that transporting energy in chemical form is by far the least expensive approach. It is interesting to notice, however, that distributing energy in the form of hot water over distances of 1 to 2 miles is only about 30 percent more expensive than transmitting electrical energy over typical distances from generating facilities to consumers, In this comparison, no attempt was made to share the cost of the trench dug for the hot water pipe with potable water, sewer, telephone, or other lines which could be placed in the excavation, The electric distribution costs would have been significantly higher if buried cables were used.

ELECTRIC TRANSMISSION AND DISTRIBUTION

Electric transmission and distribution is an expensive undertaking. Over half of the capital invested by electric utilities in the United States is invested in a massive network of transmission and distribution equipment. In recent years, the ratio between capital investment in electric generating, transmission, and distribution equipment has fallen because of the rapid increase in the cost of generating plants [see table V-2), Each dollar now invested in generating equipment is accompanied by a 16-cent investment in transmission equipment and a 23-cent investment in distribution systems, The high cost of the electric transmission and distribution system is due in part to the fact that the lines have relatively low load

[1] *Statistics of Privately Owned Electric Utilities in the United* States, Federal Power Commission, 1974, p 40

Table V-2.—Construction Expenses of Electric Companies

	1965	1967	1969	1971	1973	1975	1977
Total Investment (billions of dollars)	4.03	6.12	8.29	11.89	14.91	15.09	19.50
Production equipment (%)	32.3	41.7	46.1	56.3	58.9	65,1	68.3
Transmission equipment	23.3	21.5	18.7	15.2	13.7	11.5	10.7
Distribution equipment	39.4	32.3	29.2	23.3	22.6	18.7	15.7
Other	5.0	4.4	4.0	5.1	4.8	4.7	5.03

SOURCE. EBASCO 1977 Business and Economic Charts (Ebasco Services, Inc., New York, NY.)

factors. Hot water and steam distribution systems used for heating buildings typically have load factors of 33 percent (see table V-1).

The electric transmission and distribution lines now in place are typically 90-percent efficient, but it is hoped that improved technology will lead to overall efficiencies of 92.5 percent by the year 2000.[2] The improved efficiency, however, will most likely add to the capital cost of the systems. Gas pipelines are typically 90-percent efficient, the losses being due primarily to the fact that gas is withdrawn to run pumps in the pipeline.[3] No comparable information is available on the efficiency of hot water and steam transport systems. Losses are a strong function of the ground and fluid temperatures, the distances traveled, and the average size of the pipelines. Some recent steam distribution systems, however, have experienced losses on the order of 15 to 20 percent and have created serious difficulties for the systems relying on them.[4]

The cost of maintaining transmission equipment can also be substantial. In 1974, the cost of operating and maintaining the network of electric transmission and distribution lines owned by privately owned utilities in the United States exceeded the cost of operating and maintaining the generating facilities (fuel costs excepted). [5] Annual maintenance costs for a small hot water distribution system can amount to about 3 percent of the initial capital cost of the equipment.[6] Maintaining steam systems may prove to be significantly more expensive.

In addition to direct costs, transmission lines can have serious environmental consequences. It is estimated that over 3 million acres will be required for new transmission lines by 1990. [7] Much of this construction will occur in scenic areas where opposition is likely. In addition, it is possible that the large electric fields produced by high voltage transmission lines may be harmful. The question is being investigated and the results are inconclusive at this time.

[2]ERDA-48, Volume i, pp. B-10 **and** B-n, 1975.

[3]American Gas Association.

[4]American Public Power Association, private communication, November 1977

[5]*Statistics of Privately* Owned *Electric Utilities in the United States,* op. cit , pp. **35, 39,40, 42,43.**

[6]W. **R. Mixon, et al.,** Technology Assessment of Modular Integrated *Utility* Systems, Oak Ridge National Laboratory, ORNL/HUD/MIUS-25, pp 3-189 and 3-190.

[7]Thermo-Electron Corporation.

Table V-3.—District Heating Systems

District Heating Systems in the United States

	44 city systems	New York
Total steam sold (millions of pounds). ., ...	84,246	32,702
Total steam delivered to system (millions of pounds)	96,672	38,469
Annual system load factor . . . ., . . ., ., ...	33%	37'A
Number of customers (in thousands)	14,903	2,514
Length of distribution system (in miles)	573	100
Installed air-conditioning (tons) . . . . , ...	666,051	569,945

Note New York City has the largest American system, selling nearly 10 billion kWh per year The load Is 30 percent residences. **45 percent office bulldings, 11 percent industrles and 13 percent institutions.**

SOURCE *Offlcial Proceeding,* 80th Annual Meetlng of the International District Heating Asscciation, June 1969, pp. 22-30, quoted on **p 24** of ORNL-HUD-19, Ibid

District Heating Abroad

	Sweden (1973)	Denmark (1973)	W. Germany (1973)	U.S.S.R. (1971)
Energy sold for district heat (millions of kWh)	12	14	38	1,100,000
Units connected	600,000	30% of dwellings	83,000	75%

SOURCES I G C Dryden, *The Efficient* Use *of Energy,* IPC Science and Technology Press, 1975, p 359
Quoted In Teploengetika, Vol 18, No 12, 1971, pp 2-5
W Hausz, and C. F Meyer, Energy Conservation Is the Heat Storage Well the Key?" *Public Utilities Fortnightly,* April 24 1975

THERMAL TRANSMISSION AND DISTRIBUTION

Most hot water and process steam is consumed close to where it is generated, but a number of cities have systems for distributing steam to residences and industries. I n the United States, many older systems have been abandoned, and few new systems are being built. The Modular Integrated Utilities System (MI US) in Jersey City, N. J., is one of the few recent exceptions to this trend. The abandonment of steam distribution is due mostly to the overall decline of onsite generation. This tendency is reinforced by the fact that many older steam-distribution systems were not designed to return water to the generating plant, as the turbines operated on untreated water. This procedure became impractical with the addition of large, **high-pressure, steam-generating facilities requiring expensive water purification systems. Table V-3 estimates the capacities of district heating in the United States and abroad. On the other hand, district heating has been used much more extensively in Europe. For example, 30 percent of the residences in Denmark are connected to district heating systems. Sweden estimates that 70 percent of its multifamily units and 20 percent of its single family homes will be connected to district heating systems by 1980. West Germany plans to provide district heat to 25 to 30 percent of its dwellings by 1980,[8]**

[8] I G C Dryden (ed), *The Efficient* Use of Energy, IPC Science and Technology Press, 1975, p 358.

The feasibility of using district heating systems depends much on the density of dwelling units. A study conducted in connection with the MIUS project estimated that a garden apartment complex in the Philadelphia area (60 buildings with 12 apartment units per building) would cost about $410 per unit for heated water distribution and $330 **per unit for chilled water,[9] A MIUS system was actually installed in Jersey City, NJ., for approximately this amount.[10] A preliminary estimate of the cost of a large district heating system capable of serving a community of** *30,000* **people in a mixture of apartments and single family units indicates that the cost per unit for this dispersed system would be nearly three times as great, The ability of a system to amortize these costs depends on the cost of the energy supplied and the yearly energy demand of each building. A rule-of-thumb applied until recently in West Germany was that a "break-even" housing density was one which required 44 MW_t/km^2 for existing urban areas and 28 MW_t/km^2 for new developments. Recent increases in fuel prices, however, have led them to consider areas with demands as low as 14 MW_t/km^2. The garden apartments in the MIUS study had a demand of approximately 30 MW_t/km^2.**

[9] G Samuels, **et al ,** M/US Systems *Analysis, Initial Comparisons* of Modular *Sized Integrated Utility* Systems *and Conventional* Systems, Oak Ridge National Laboratory ORNL/HUD/MIUS-J une 6, 1976, p 144

[10] Paul R Achenbach and John B Coble, Site *Analysis* for *the Application* of *Total* Energy Systems to *Housing* Developments.

[11] I G.C Dryden, op cit , p 251

SALE OF POWER GENERATED ONSITE

METERING

No major technical barriers need to be overcome in designing meters for onsite energy equipment, but new types of meters may have to be developed for this purpose. If a utility owns onsite equipment with thermal output, some technique must be found for billing customers for the energy produced by the onsite device. One utility has suggested that the simplest technique would be to bill a customer on the basis of actual capital and maintenance costs, although meters capable of measuring the energy generated by solar thermal systems of various sizes are available.[12 13] An electric utility in Florida is using such Btu meters on solar hot water heaters installed under its auspices. [4]

The metering problems of onsite electric generating systems depend on the nature of the customer's relationship with the local utility, If the utility is willing to purchase energy at the same price as it sells energy to onsite users (or if it owns the generating equipment itself), it may not be necessary to change metering systems — because conventional meters can subtract from the net energy account when energy is being sold and add to the account when energy is purchased. This practice is currently permitted in several New England States on an experimental basis. " In cases where energy is sold at a different price from that purchased, dual meters will be required —with one ratchet to read sales to the customer and one ratchet to read purchases from the customer,

SAFETY

There could be risks associated with the installation of onsite electric-generating

[12] Phi ladelphia E lectric Company in an interview reported in the General E lectric study Conceptual *Design* and Systems Analysis of *Photovoltaic* Power Systems.

[13] For example, the E lectron Advancement Corporation sells meters measuring 1400 to 1500 F water at flow rates of 30 to 100 gpm at a price of $400 to $500 (price list Feb 9, 1977)

[14] *Solar Energy Digest,* January 1977, p 9.

[15] Ben Wolf, Gemini Company, private communication, Apr 27, 1977.

equipment which would not automatically disconnect from utility lines when repairs are being made or when a utility line breaks in a storm or accident. As one utility put it, this "poses no problem for trained utility crewmen who treat al I lines as hot unless locally grounded The major problem can arise through exposure of laymen and children to potentially hot lines before repair crews arrive on the scene "[16] This problem can be eliminated if the onsite generating equipment is automatically taken off the line whenever the power fails. This is a standard feature in at least one design of small power-conditioning equipment now on the market. [17] The utilities Interviewed in the General Electric study indicated that any type of onsite equipment which did not incorporate such a feature could be fitted with a device al lowing the utllity to sever the connection with the utility distribution network through telemetry. Such units were estimated to cost about $100.[18] (The same units could also be used for interruptible service and for load management) It would be necessary for the utility to approve the onsite equipment connected to its grid in order to ensure that adequate safety features of this type were installed

QUALITY OF POWER FED BACK TO UTILITIES

There should be no difficulty in constructing equipment capable of providing power to utilities which meets utility standards of voltage regulation and frequency control.[19] One manufacturer of small inverter systems has sold 65 units which are integrated into utility systems, and quality of power has not been an issue 20

LOCAL DISTRIBUTION CAPACITY

One potential technical difficulty, identified in the General Electric study, is the possibility that onsite units which feed electricity back into the power distribution grld would exceed the capacity of the lines and transformers serving the area It is unlikely that onsite units would produce excess power for sale at a rate high enough to exceed the peak purchases of the onsite customer. There could be some problems in older communities, where distribution systems were installed without considering the possibility that a substantial number of residences might be equipped with al l-electric systems. A typical distribution system, however, should be able to accommodate the output of residential photovoltaic systems without major changes in transformers or lines.[21]

ECONOMIC DISPATCH

Electric utilities now control the scheduling of their generators via computer. This optimizes the efficiency of their entire system on a minute-to-minute basis throughout the day As long as a relatively small number of a utility's customers are using solar equipment which can generate electricity, no large-scale shift is necessary in current economic dispatch practices. 22 The net load to the utility would fluctuate throughout the day, but current equipment and management schemes are adequate to handle the relatively large fluctuations that already occur with daily cycles, local weather variations, and industrial energy consumption. The utilities interviewed by the General Electric Company indicated that special dispatch strategies would not be required, even if onsite generating devices were installed by 10 to 30 percent of their customers.

[16] Pacific Gas and t lectric Company Interview published in General E lectric's photovoltaic study cited previously

[17] 'Alan W Wilkerson (President of Gemini Company), *Synchronous Inversion Techniques for Utilization of Waste Energy,* 1976

"Conceptual *Design and Systems Analysis of Photovoltaic Systems,* General E lectric Corporation, Schenectady, N Y , Mar 19, 1977, pp 5-9

"General Electric Company, op cit , pp *5-4*

[20] Gemini Company, op cit

"General Electric conceptual design study, pp 5-3

"General E lectric conceptual design study

The Dow Chemical Company's examination of industrial cogeneration was "unable to identify any problems or potential problems of transient stability attributable to dispersed industrial generation. The effect of dispersed generation close to load centers is to improve system integration and stability problems."[23] However, if dispatching or system stability became a problem, the difficulty could be resolved by using the interruptible service devices discussed earlier. When onsite users were producing too much energy for a utility's needs, the onsite devices could simply be disconnected from the load. (The cost of this could be included in the $100 per unit cited for interruptible services meters.) It is also possible that economic dispatch of electric utilities could improve if a number of onsite generating facilities were equipped with sufficient onsite storage of a fossil backup system. Dispatch is not a problem for systems relying on chemical fuels for backup.

CONTROL

TIME-OF-DAY PRICING

Some of the advantages of connecting energy generating and consuming devices with a common energy transport system cannot be realized if control over the equipment is not exercised by a central authority capable of optimizing the performance of the integrated system. This control can be exercised directly by a utility if it owns all of the storage and generating equipment in a system, but it can be exercised indirectly by such approaches as time-of-day pricing. For example, with time-of-day pricing, the costs of nonoptimum performance of equipment not owned by the utility would be communicated to the owners of this equipment through higher prices for energy consumed for backup power and lower rates for any energy sold to the utility. The electric rates now in effect in most parts of the United States, however, do not have the effect of enforcing optimum al locations between onsite and centralized generating equipment. I n fact, many of the current rates tend to discourage onsite generation in spite of potential cost savings. (This problem is treated in chapter VI Legal *and Regulatory Issues.)*

Figure V-1 illustrates the dramatic change in electricity consumption in Great Britain which occurred after a time-of-day electric rate was imposed. Before the rate was introduced, very little electricity was consumed during the night and an enormous in-

Figure V-1 .— Improvement in the Pattern of Electricity Consumption in England's South Western Electricity Board Resulting From a Shift to Time-of-Day Electricity Rates

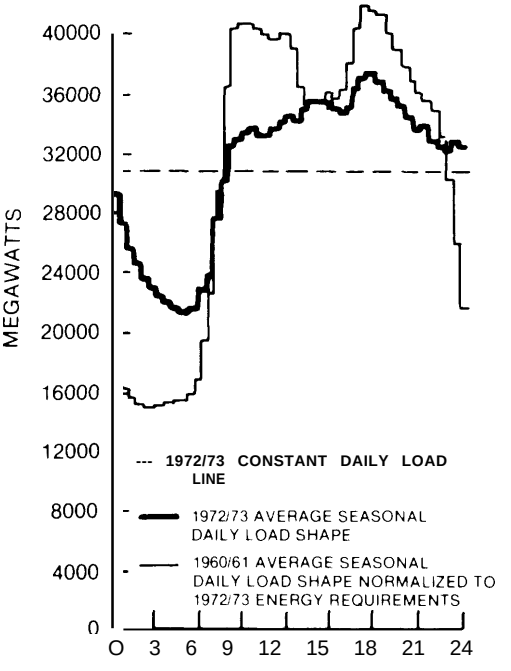

Winter-average Weekday Load Curve

SOURCE
Ash bury, J G and A. Kouvalis, *Electric Storage Heating The Experience in England and Wales and in the Federal Republic of Germany* ' Argonne National Laboratory, Energy and Environmental Systems Division AN **LJES 50** 1976 p 14

[2] 'The Dow Chemical Company, et al , *Energy Industrial Center Study.* NSF Grant #OE P 74-2042, June 1975, p 70

crease occurred in the morning when electric heaters and other equipment were turned on. After the variable rate was introduced, many consumers purchased onsite thermal storage devices which could be charged during the night and used to heat buildings during the day. The result was a much more uniform pattern of energy consumption.

STORAGE STRATEGY

Onsite solar electric devices integrated into electric utility grids provide a good example of some of the difficulties which can arise from local control over storage equipment, A solar electric system which is not connected to a utility grid would charge its batteries during the day and discharge its batteries during the night. This is precisely the wrong strategy of operation from the perspective of the electric utility since storage devices owned by the utility would be charged during the night, when demands are low, and discharged during the day when demands are greatest.

There will be some overlap between the two operating strategies since both types of storage would be discharging near sunset and during cloudy days, but it is clear that the storage equipment would be used to best effect if it were controlled by the utility. The advantage of using the solar electric devices to meet utility electric demands directly during the day (instead of sending it to be stored) is arnplified by the fact that storage devices are typically only about 75-percent efficient This logic would apply *even* if a very large fraction of the utility's energy were derived from solar sources, although in this case the strategy of operating individual storage systems would closely parallel the operation of utility storage. (A quantitative *evaluation* of this issue appears i n the final section of this chapter,)

LOAD MANAGEMENT

The performance of isolated and interconnected energy systems can be improved if control is exercised over devices which consume energy as well as over energy storage and generating equipment. Clearly, energy consumers will want to exercise as much discretion as possible over the amount of energy they use and when they use the energy, but they also may be willing to change their consuming habits to some extent if they are required to pay large premiums for energy consumed during periods when energy is relatively expensive to produce. Consumers may be willing to postpone or defer the use of appliances such as dishwashers, disposals, clothes washers and dryers, and other equipment when electricity is expensive.

The utility can exercise control through the use of "interruptible service" equipment when onsite equipment includes onsite storage, Such devices would permit the utility to turn off water heaters and other appliances with storage capabilities during periods of peak demand. Equipment of this type has been installed for relatively large-scale testing by the Detroit Edison Co. If this equipment could ensure that onsite generating equipment (whether thermal or electric) purchases backup power only during off peak periods, the cost of backup energy to the onsite customer might be reduced — perhaps to the point where energy could be bought and sold at the same rate. An experiment was recently conducted in Vermont in which these appliances were automatically turned off when utility rates were high. The customers were able to switch them back on again, but in most cases were willing to wait until rates fell.[24] Well-insulated water heaters and freezers are able to operate effectively even if their supplies of electricity are automatically shut off during the day when electricity prices are high. Several cities in Germany have utilities which are able to exercise elaborate control over energy-consuming equipment The central *load-management*

[24] J G Ashbury and A Kouvalis, *Electric Storage Heating The Experience in England and Wales and in the Federal Republic of Germany,* Argonne National Laboratory, Energy and Environmental Systems Division, ANL ES-50, 1976, p 20

computer can control both the generating equipment and electricity-consuming devices. The computer sends a signal down the electric wires which automatically shuts off industrial equipment, refrigerators, water heaters, and other equipment where energy use can be deferred during peak periods. 25

As was the case with the control over storage, however, the strategy of deferring demand for energy will depend strongly on how the solar devices are connected with other energy equipment. If the solar device operates in isolation, an attempt should be made to shift all demands for energy to periods when the sun is shining, If an electric utility is used for backup power, however, it will usually be preferable to shift the demands which would require backup power to the late evening.

OFFPEAK ELECTRICITY

It is sometimes argued that electric utilities will be able to sell "off peak" electricity at a rate which covers only the cost of operating a large "baseload" plant and the relatively inexpensive fuels which can be used in these plants. Such rates are possible, but they must be considered promotional since, in effect, they subsidize the price of electricity during the night by charging daytime customers for all other utility costs. These costs are capital charges on generating plants and transmission and distribution systems, the costs of maintaining the transmission and distribution lines, and all other overhead costs — including the added cost of maintaining dual meters for daytime and nighttime rates.

It is also important to recognize that there is not an unlimited supply of "off peak" power available in a given utility. There are many possible uses for the power available at night, in addition to storing heat for buildings. The power can be used to charge batteries for electric vehicles and in other industrial procedures which can be deferred to use night rates. The utilities may find that they require the "off peak" nighttime energy themselves to charge their own storage devices, if utility storage must be used as a replacement for the oil- and gas-fired generators now used to meet utility peaks. (The National Energy Plan places major emphasis on eliminating utility use of oil and gas.) And utilities must also make some use of off peak periods to maintain their equipment.

OWNERSHIP

The complex rates required to encourage design of onsite equipment best suited for the energy network of which it is a part, would, of course, be obviated if utilities owned the onsite systems outright. While there clearly are disadvantages associated with expanding the monopoly position of utilities, there are a number of reasons for believing that utility ownership of onsite solar equipment may be attractive in many circumstances:

- Utilities are uniquely able to optimize the mix of generating and storage equipment in their service area and to develop control strategies for minimizing overall utility costs. (This could, of course, also be done by a company owning only transmission and distribution equipment,)

- Utilities compare the cost of energy derived from new solar equipment to the cost of generating energy from new electric-generating equipment or the marginal cost of gas from new sources, while all other solar owners must compare solar costs to the lower imbedded costs of energy which determine commercial rates.

- Utilities are probably better able to raise large amounts of capital for long-

"J G Ashbury, op cit , p 20

term energy investments than any other type of organization. As the statistics in table V-4 indicate, electric utilities require several times more capital per dollar of sales than typical industrial firms (although the capital intensity has declined rapidly **in recent years because of the rapid increase in fuel costs) At the end of 1974,** electric utilities owned approximately $150 **billion in plants and equipment— nearly 20 percent of all business plant equipment in the United States.**[26]

Table V-4. —The Capital Intensity of Major U.S. Industries
[Dollars of plant to secure $1.00 of revenue]

	$
Investor-owned electric companies:	
(1965)	4.51
(1970)	4.39
(1975)	3.20
(1977) (est.)	2.96
Bell Telephone System (1971)	2.95
10 major railroads (1971)	2.48
Gas transmission companies (1971)	2.43
Gas distribution companies (1971)	1.62
10 major integrated oil companies (1971)	1.25
500 diversified industrial companies (1971)	0.87
50 major retailers (1971)	0.43

SOURCES *National* Gas Survey U S Federal Power Commission Ebasco Services Incorporated (New York, N Y), *1977 Business and Economic Charts* p **28**

An ability to raise capital for long-term investments is particularly critical for solar energy devices since solar energy is very capital-intensive and typically requires a number of years to return the initial investment. Utilities, therefore, may be uniquely able to provide initial capital for solar devices in situations where individuals (particularly individuals in lower income groups) and organizations may find the capital requirements prohibitive. Reverses in the stock market, uncertainties about the future of the energy industry, and difficulties in obtaining rate changes from utility commissions have, however, made it progressively more difficult for utilities to raise capital in recent years,

- **Utility capital tends to be less expensive than capital required by more speculative industries. A typical utility can raise 50 percent of its capital from debt–while most manufacturers rely on debt for only 10 to 15 percent of new investment capital, the remainder of the capital being purchased at higher rates from investors, 27 Utility capital costs may, however, be higher than those experienced by homeowners and can be higher than the cost of capital available for financing typical residential and commercial buildings. A home owner earning a tax-free return of 10 percent on capital invested in solar energy equipment may be well satisfied. This advantage is moot, of course, if the individual is unable to raise any capital for the project at al 1.**
- **Utilities are already in the business of selling energy and have the required** infrastructure **for billing, marketing, and repairing equipment, Some potential owners of onsite devices have been wary of investing in** equiprnent which might lead them to unfamiliar maintenance problems or the hiring of specialized **personnel,**
- **Utility ownership or marketing of solar equipment and a willingness to stand behind the equipment once installed could increase consumer confidence in the equipment.**

There is some ambiguity, however, about whether utility ownership of small solar energy equipment would be permitted by Federal antitrust statutes. **The legal issues of**

[26] Federal Power Commission, National Power Survey, *Financial Outlook for the Electric Power Industry. Report and Recommendations of the Technical Advisory Committee on Finance,* December 1974, P 50

"Paul J Garfield and W F Lovejoy, *Public Utility Economics,* Prentice Hall, Inc, Englewood Cliffs, N J, 1964, p 25

ownership are discussed in greater detail in chapter V 1, Legal and Regulatory Issues.

UTILITY ATTITUDES

There is no industrywide position either on the issue of onsite generation or on the question of utility ownership of such facilities, Industry attitudes vary company by company, and the diversity of attitudes is due, at least in part, to the fact that many utility companies simply have not taken a close look at the issue.

Natural gas utilities have expressed the greatest recent interest in onsite solar facilities since supplies of gas are diminishing and the companies are looking for new energy sources to replace natural gas in the future. Southern California Gas Co., for example, has tested solar-assisted gas heating for apartment buildings as one means of conserving supplies and extending the life of the company's resources .28 Interest is not confined to gas companies. A recent survey found nearly 100 electric utilities which were initiating projects in solar heating and cooling.[29 30] The Electric Power Research Institute has an extensive program in solar energy equipment.[31] At least one electric utility has entered into an agreement with a local installer of solar hot water heaters, and a gas utility has proposed changes in regulations that would permit it to operate as a combined gas and solar utility.[32 33]

On the other hand, most of the utility companies surveyed for a General Electric study referred to earlier said they were reluctant to enter the business of selling thermal energy systems. Some indicated that it would require too much diversification; others cited problems with metering and other technical difficulties.

A study conducted for the Federal Energy Administration found mixed opinions among utilities on expanding capacity by using conventional onsite generating equipment, primarily cogeneration systems in factories and other generators of process heat. Examples include:

- A west-south-central utility which sells both steam and electricity.
- A Pacific coast utility, which has installed turbines at a paper mill, returns low-temperature steam to the mill and pays $0,01 per kWh for the electricity generated.
- A Vermont utility actively searching for cogeneration opportunities.
- A Texas utility which stated flatly that they were "not in the business of selling steam, " and which turned down several opportunities.

Although utility attitudes may be changing, there have been scattered complaints that utilities have tried to thwart private companies intending to install onsite generating equipment. The Dow Chemical Co. reports that onsite industrial cogeneration "has been consistently discouraged by longstanding policies on the part of most privately owned electric utilities that have discouraged in every way possible the generation of electricity by any other type of organization. Relevant here are rate schedules

---

[28] Alan Hirshberg, *Public Policy for Solar Heating and Cooling,* October 1976, p 37

[29] *Solar Energy Intelligence Report,* Feb. 14, 1977, p 31

[30] Electric Power Research Institute, *Survey of Electric Utility Solar Projects,* Palo Alto, Calif , ER 321 -SR, 1977

[31] E lectric Power Research I nstitute, *Electric Power Research Institute: Solar Energy Program,* fall of 1976, E PRI RP 549, 1976

"E S Davis, *Commercializing Solar Energy: The Case for Gas Utility Ownership,* mimeo, Jet Propulsion Laboratory report, California Institute of Technology, June 1976

"General Electric Corporation, conceptual design study.

[34] Dow Chemical Co , et al , *Energy Industrial Center Study,* June 1975, p 23

[35] Thermo E lectron Corp., *A Study of /rip/ant Electric Power Generation in the Chemical, Petroleum Refining, and Paper and Pulp Industries, June* 1976

that favor large industrial users (whether justified or not by **"cost of service"), and heavy demand charges (charges levied even if no** power is used) that make it uneconoml-**cal to use the utility as a standby source backing up industrial power generation "'b**

THE COST OF PROVIDING BACKUP POWER FROM AN ELECTRIC UTILITY

There is no easy way to compute the cost of providing backup power to an onsite system from a conventional electric utility since electric utility costs are very sensitive to the cost of equipment and fuels in the area being served and to the times when electric backup power is demanded. A simple technique for computing these costs is presented here to illustrate some of the major trends, to exhibit several different ways of looking at the major trends, and to exhibit several different ways of looking **at the issue of rates. It must be emphasized from the onset that the method cannot be taken to be a precise calculation of the costs of electric utilities actually operating in the regions covered. The results are so sensitive to local conditions that each utility must make its own analysis of the costs. The following analysis shows that utility costs are extreme ly sensitive to four variables:**

- **The regional cost of equipment, the available financing, and the local cost of fuels;**
- **Local climatic conditions [for example, solar backup costs are lower if peak heating and cooling periods are correlated with periods of clear skies);**
- **The type of solar equipment installed (collector area, storage capacity, etc.); and**
- **Ž The number of buildings in a utility service area equipped with solar energy devices (a relatively small number of solar facilities will contribute to load diversity, but a large number will reverse this result).**

The details of the technique used to compute utility costs, and detailed assumptions made about the costs of equipment and fuels experienced by each utllity, are described in detail in appendix A of this chapter, but the basic method ıs straightforward:

1. **A "baseline" utility was constructed by combining the electric demands of a number of buildings and industrial** processes using a mixture **of energy-consuming equipment which was typical for the city under examination. The cost of providing electricity for the combined utility load was then computed, assuming that the utility was optimized to meet the demands. (Both the cost of energy attributable only to the generating units, the so-called "busbar costs, " and the cost of energy delivered to customers were computed).**
2. **The cost of meeting a new set of electric demands resulting from adding a specified number of solar and nonsolar buildings to the utility was computed, assuming that the utility was optimized to meet the new demand pattern.**
3. **The effective cost of providing backup power for different types of buildings could then be computed by examinin, the incremental costs and the incremental utility costs which resulted when the new buildings were added,**

Since it was assumed that all of the equipment in the utility was new, and the costs computed are all essentially marginal costs, the actual utility costs in the region would be lower because some fraction of the ener-

"Dow Chemical Co , et al , *Energy Industrial Center Study,* June 1975, p 23

gy would be generated from less-expensive, older plants. There are a number of other artificial ities in the technique:

- The choice of an "optimum" set of utility equipment does not use a detailed analysis of overall system reliability and maintenance schedules— it instead simply assumes that the utility will purchase 20 percent more in each generating capacity than the peak required in , that category to meet the load;
- Utilities will seldom be able to deploy equipment which is optimally suited to load patterns because of regulatory delays, an inability to precisely predict demands, and the need to use older equipment; and
- I t was assumed that none of the utilities evaluated owned storage equipment. In the future, utility storage devices may play a major role in replacing the oil- and gas-burning devices now used to meet real demands. The impact of storage on the cost of backup power for solar systems will need to be carefully examined. One would expect that low-cost storage would minimize the negative impacts of solar equipment.

This technique has been used to compute the cost of providing electric power to a number of different single family houses, and the results are summarized in table V-5. This table compares the cost per kWh of providing electricity to the building described to the cost per kWh of providing electricity to a similar building using an electric heat pump. All comparisons are between delivered costs. Greater detail on the utility costs and the capacity of equipment installed is presented in volume I I.) For example, the table indicates that the electricity required by a single family house using gas for heating, water heating, and air-conditioning in Albuquerque, N. Mex., costs the utility 2 percent more than the electricity used to provide power for a conventional single family house in the same city using a heat pump and electric hot water.

An examination of table V-5 reveals several features:

- Ž Electricity for conventional houses using gas for everything other than fans and miscellaneous electric loads costs the utility approximately the same amount as electricity for a heat-pump house.
- Electricity costs are lower for houses using electric resistance heat (presumably because they use more electricity during periods of mild winter weather when utility demands are relatively low) and are higher for houses using gas heat and electric air-conditioning. (All of the utilities examined have peaks in the summer, and these peaks are increased by the added air-conditioning. But the added equipment is underutilized since the new houses do not use much electricity during the winter.)
- The houses using solar energy for heating and hot water and a heat-pump backup cost the utility more per kWh than the conventional houses using baseboard heat, but less than the houses using gas heat.
- The photovoltaic houses cost some what more than the houses equipped only with solar heating and hot water, but in no case is the utility cost significantly larger than the cost of providing backup power for a heat-pump house– in several instances, the utility costs are lower in the solar cases. The relatively favorable appearance of these solar systems results in part from the fact that some of the utility air-conditioning peaks can be reduced by the solar devices. (About 50 percent of the total building energy requirement is provided by the photovoltaic devices, and about 30 percent of the total energy requirement of the house is provided by the heating and hot water systems.)
- Utility costs per kWh of backup power delivered are increased slightly if sales to the utility are permitted.

Table V-5.—The Fractional Difference Between the Utility Costs [¢/kWh] Required to Provide Backup Power to the Systems Shown and the Costs to Provide Power to a Residence Equipped With an Electric Heat Pump [see note for explanation]

	Albuquerque	Boston	Fort Worth	Omaha
1. Single family house with gas heat, hot water, and alr-conditioning" . .	**0.02**	**-0.09**	**-0.15**	**0.03**
2 Single family house with gas heat and hot water, and central electric air-conditioning •.	0.26	0.28	0.15	0.32
3. Single family house with baseboard heat, electric hot water, and window air-conditioning"	– 0.14	-0.14	-0.15	-0.10
4. Single family house with solar heat and hot water backed up with a heat pump and electric hot water*	0.01	-0.13	0.06	-0.07
5. Single family house with extra in- **sulation, electric hot water, and heat pump with:..**				
a. Photovoltaic system with no battery and no sale to the utility	-0.06	-0.27	**‘0.02**	**-0.07**
b. Photovoltaic system with no battery and sales to utility permitted, ...	0.07	-0.23	0.03	-0.01
c. Photovoltaic system with battery and no sales to utility.	-0.30	-0.27	0.01	-0.05

• Compared with single family house with electric hot water and heat pump.
“ Compared with single family house with extra insulation, electric not water, and heat pump,

NOTE: let C_r = Incremental utility costs resulting from adding 1,000 reference houses with heat pumps.
let K_r = the Incremental number of kWh generated when 1,000 reference houses with heat pumps are added to the utility
let C_t and K_t be the equivalent quantities resulting from adding 1,000 houses with a different kind of energy equipment
Then the fractional change *illustrated* **above is** given as follows: $F = \frac{C_t/K_t - C_r/K_r}{C_r/K_r}$

Table V-6 indicates the levelized monthly costs which would be experienced by consumers if they were charged electric rates reflecting the marginal cost of providing energy to several types of energy systems. Levelized costs assuming a moderate rate of increase in electric prices are shown for comparison. In these cases, it is assumed that an electric utility will purchase electricity from the onsite generating facility for 50 percent of the price at which it sells electricity. (In the cases when the electric price was assumed to be the marginal cost of providing backup — giving credit to the value of electricity sold to the utility— it was assumed that electricity is bought and sold at the same price.)

Except for Boston, the two techniques for computing levelized energy costs produce similar estimates of levelized energy charges. (It is likely that the techniques used to compute the marginal costs of electricity are overly optimistic about the costs of new

Table V-6.—Levelized Monthly Costs for a Well-Insulated Single Family House Showing the Effect of Marginal Costing for Backup Power

	Electricity rates assumed to increase by BNL forecast		Electricity rates reflect marginal utility rates (see appendix for methodology)	
	No credits given	20% ITC on solar equipment	No credits given	20% ITC on solar equipment
I. ALBUQUERQUE				
—no solar	183	183	204	204
—59 m^2 silicon photovoltaics, no batteries, no sales to the the utility	213(255)	202(246)	21 4(257)	204(248)
—59 m^2 silicon photovoltaics, no batteries, sales to utility permitted	197(240)	187(231)	190(232)	179(223)
—59 m^2 silicon photovoltaics, no batteries, sales to utility permitted	216(267)	204(257)	194(245)	181 (234)
II. BOSTON				
—no solar	300	300	215	215
—59 m^2 silicon photovoltaics, no batteries, no sales to the Utility	319(362)	308(353)	215(259)	204(249)
—59 m^2 silicon photovoltaics, no batteries, sales to utility permitted	305(348)	294(339)	200(244)	189(234)
—59 m^2 silicon photovoltaics, no batteries, sales to utility permitted	324(376)	311 (365)	227(279)	21 3(267)
III. FORT WORTH				
—no solar	190	190	191	191
—59 m^2 silicon photovoltaics, no batteries, no sales to the utility	228(272)	216(262)	227(272)	216(262)
—59 m^2 silicon photovoltaics, no batteries, sales to utility permitted	218(263)	207(253)	212(257)	201 (247)
—59 m^2 silicon photovoltaics, no batteries, sales to utility permitted	240(293)	226(281)	242(295)	228(283)
IV. OMAHA				
—no solar	211	211	219	219
—59 m^2 silicon photovoltaics, no batteries, no sales to the utility	241 (284)	230(275)	238(282)	228(273
—59 m^2 silicon photovoltaics, no batteries, sales to utility permitted	231 (275)	220(265)	223(267)	21 2(258
—59 m^2 silicon photovoltaics, no batteries, sales to utility permitted	253(305)	239(294)	250(303)	237(291)

NOTES: (1) All houses use heat pumps for space conditioning and electric resistance hot water heaters
(2) Parenthesis ( ) indicates utility ownership.
(3) ITC = Investment Tax Credit

equipment in that region.) More importantly, however, the ranking of the levelized costs of the four systems appears not to depend on whether marginal costs or average costs are used to make estimates.

The same methods can be used to estimate the price a utility should be able to pay for electricity produced by an onsite device which exceeds onsite demands. This can be done simply by computing the difference in utility costs which results when a group of solar buildings is permitted to sell energy and dividing this cost by the total amount of kWh sold. The results are presented in table V-7 as a ratio between the value of the electricity available for purchase and the average cost of electricity generated by the utility. Since all costs in the utility used in this analysis are effectively "marginal costs," the onsite devices are

Table V-7.—Ratio of Price Utilities Can Pay for Solar Energy Generated Onsite to the Price Charged by Utilities for Electricity

	Albuquerque		Boston		Fort Worth		Omaha	
	Purchase base	Purchase reference	Purchase base	Purchase reference	Purchase base	Purchase reference	Purchase base	Purchase reference
1. Single family house with no onsite batteries	0.67	0.65	0.62	0.55	0.31	0.28	0.57	0.59
2. Single family house with onsite batteries	0.40	0.39	1.09	0.98	0.29	0.26	0.64	0.66
3. Single family house with extra insulation and no onsite batteries	0.64	0.62	0.58	0.49	0.66	0.64	0.50	0.50
4. High rise apartment with no onsite batteries	0.64	0.66	0.51	0.48	0.29	0.29	0.42	0.44
5. High rise apartment with onsite batteries	0.41	0.43	0.38	0.36	0.29	0.28	0.36	0.38

Let x = (utility cost supplying building not selling electricity minus utility costs for building selling excess electricity to the utility)

Let y = (kWh generated by utility in supplying building not selling electricity minus utility costs in supplying building selling excess electricity)

Let z = (added utility cost incurred in supplying building with no solar equipment) divided by (added kWh required to supply the building)

Let w = (total utility costs) divided by (total kWh produced by the utility)—no additional buildings

$$\frac{\text{Purchase}}{\text{Base}} = \frac{x/y}{w} \qquad \frac{\text{Purchase}}{\text{Reference}} = \frac{x/y}{x}$$

All utility costs are delivered costs

not given credit for the difference between the imbedded average utility costs used to determine selling prices and the fact that new solar systems will displace relatively expensive "new" generating facilities.

Table V-8 shows information for high rise apartment buildings which is equivalent to the data for single family houses shown in table V-7. It can be seen that the solar devices are less attractive to the utility in these cases, in part because the reference case chosen for the high rise building uses electric baseboard heating—which produces a more even load than the heat pumps used for the single family reference case.

As noted earlier in this chapter, the costs of providing electricity can be reduced if onsite storage is available at each building site which permits the building to purchase energy during periods when the demand on the utility is relatively low. Solar equipment, of course, is typically already equipped with a thermal storage device, and these devices can be converted to allow the system to purchase energy only during off peak periods with a relatively simple change in their control systems. The result of installing off peak storage devices in a number of different types of buildings is shown in tables V-9 and V-10. Chilled water can also be produced during the night and stored in tanks to reduce cooling loads during the day. The use of "off peak cooling" has the additional advantage of allowing the chilling equipment to operate at night when it is more efficient. In computing the load pattern, it was assumed that the storage devices are charged between midnight and 5 a.m. and that the amount stored is equal to the amount of backup energy for heating, hot water, and cooling which would have been required for the previous day with no off peak storage.

An examination of tables V-9 and V-10 shows that the savings to the utility can be considerable if off peak storage is used onsite. In the case of off peak storage of cooling, utility costs per kWh attributable to the house are reduced by nearly 50 percent. In all cases, the reduction in costs is lower if solar equipment is installed, but in many instances the difference is not very large. Typically, the utility cost per kWh to provide backup power for the solar houses with off-peak storage is about 10 percent greater

Table V-8.—The Fractional Difference Between the Utility Costs Required To Provide Backup to the Systems Shown and the Costs of Providing Power to a High Rise Apartment Equipped With Central Electric Air-Conditioning, Electric Hot Water, and Baseboard Resistance Heating [see notes on previous table for explanation of how these fractional changes are computed]

Building equipment	Albuquerque	Boston	Fort Worth	Omaha
1. Gas heat, gas hot water, and gas air-conditioning.	0	-0.11	-0.12	-0.05
2. Gas heat, gas hot water, electric air-conditioning.	0.02	0.32	0.21	0.26
3. Electric hot water, electric baseboard heat, central electric air-conditioning, and a photovoltaic system:				
a. No batteries onsite, no sales to grid	0.27	-0.01	0.21	0.03
b. No batteries onsite, sales to grid allowed .	0.31	-0.02	0.23	0.09
c. Batteries onsite, no sales to grid	0.28	-0.02	0.22	0.08
d. Batteries used onsite, sales to grid allowed	0.31	-0.02	0.22	0.08

Table V-9.—The Impact of Off peak Storage on Utility Costs
[fractional increase or decrease in backup costs per kWh–see notes]

	Albuquerque	Boston	Fort Worth	Omaha
Nonsolar houses				
•Off peak storage for heat and hot water	-0.37	-0.38	-0.29	-0.34
•Off peak storage for heat, hot water, and cooling	-0.47	-0.45	-0.48	-0.44
Houses with solar heating and hot water				
. No off peak storage	**0.03**	-0.11	0.12	-0.06
Ž Off peak storage for heating and hot water . . .	-0.11	-0.24	0.003	-0.21
. Off peak storage of heating, hot water, and cooling	-0.30	-0.35	-0.32	-0.36

Notes The '' reference house' is a single family house using electric resistance heating and hot water and window air-conditioners
All solar houses generate only heating and hot water from solar energy.

Let C_r = added utility costs resulting from the addition of 1,000 reference houses

K_r = added kWh resulting from the addition of 1,000 reference houses

C_t = added utility costs resulting from the addition of 1,000 test houses (type noted in left column above)

K_t = added utility costs resulting from the addition of 1,000 test houses

The fractional change ratio shown above is calculated as follows:

$$F = \frac{(C_t/K_t) - (C_r/K_r)}{(C_r/K_r)}$$

than the utility cost per kWh attributable to conventional houses with off peak storage.

It is apparent that the solar systems have more difficulty competing with conventional electric heating systems if the conventional devices use off peak storage and are able to buy electricity during off peak periods at reduced rates. There are, however, still a number of cases in the examples shown where solar devices are able to compete. Off peak storage equipment, while not as expensive as solar devices, can still be costly: they require the installation of heating (or chilling) equipment which is larger in capacity than conventional equipment by the ratio of 24 hours to the number of hours used to charge storage; with existing technology, heat pumps cannot be used to charge off peak heat storage and resistance heating must be used; and the devices require more sophisticated controls than ordinary heating systems. Another difficulty with storage of off peak electricity in the form of thermal energy to be used for space heating is that, in the climates examined in this study, the use of off peak storage led to a significant increase in the electricity consumed by each building—which would reduce the economic advantage to the building owner of using off peak storage. It must also be recognized that the costs shown in the tables implicity assume that an ideal "marginal rate" is charged in which the utility is able to charge each customer precisely the real incremental cost incurred by the utility in supplying that customer. In this sense, the costs represent a "best case" for off peak power. The rates also do not include additional charges which might result from additional metering and billing. The results may indicate, however, that in the long-run conventional electric utilities may prove to be poor choices for providing backup power to onsite solar installations.

Table V-10.—Levelized Monthly Costs for a Single Family House Showing the Effect of Marginal Costing and Buying of Off peak Power

	Electricity rates assumed to increase by BNL forecast		Electricity rates reflect marginal utility rates (see appendix for methodology)	
	No credits	200% ITC on solar & off peak equipment	No credits	20% ITC on solar & off peak equipment
i. Albuquerque				
—No solar or off peak buying:				
. Electric resistance heat. . . .	239	239	241	241
•Heat pump heat	204	204	229	229
—Solar only:				
•Low cost coils . . , ...	185(21 1)	179(205)	183(209)	177(203
Ž High cost	205(240)	196(232)	203(238)	194(230)
—Offpeak heating, & hot water only	N/A	N/A	185(205)	181 (201)
—Offpeak heating, cooling & hot water only.	N 1A	N/A	198(232)	189(225)
—Solar & off peak heating & hot water				
•Low Cost coils	N/A	N/A	177(207)	169(200)
•High cost coils	N/A	N/A	197(236)	186(227)
—Solar & off peak heating, cooling & hot water				
•Low Cost coils	N/A	N/A	194(242)	181 (231)
•High cost coils.	**N/A**	N/A	214(272)	198(258)
II. **Omaha**				
—No solar or off peak buying:				
•Electric resistance heat. . . .	**278**	278	278	278
•Heat pump heat	**250**	250	268	268
—Solar only				
•Low Cost coils	**252(282)**	244(276)	234(265)	227(259)
Ž High cost coils	**278(320)**	267(31 1)	261 (303)	250(294)
—Offpeak heating & hot water only	**N/A**	**N/A**	219(241)	21 4(237)
—Offpeak heating, cooling & hot water only.	N/A	N/A	237(278)	227(270)
—Solar & off peak heating & hot water				
•Low COSt Coils	N/A	N/A	221 (258)	211 (250)
. High cost colts.	N/A	N/A	247(296)	234(284)
—Solar & off peak heating cooling & hot water				
•Low Cost Coils	N/A	**N/A**	244(303)	228(289)
Ž High cost coILs.	N/A	**N/A**	270(341)	250(324)

NOTE: Solar systems are thermal only; Houses are SF-3

Table V-1 O also shows that when contemporary rate schedules are **used, it costs less to heat a single family house with a heat pump than with electric resistance baseboard heat. The difference in costs narrows considerably, however, if marginal costs are charged. The resistance system actually is less expensive if off peak storage is used in connection with the resistance heating. The disadvantages of heat-pump systems would be magnified if a large number of customers in the regions examined used electric heating and the utility peak occurred in the winter (both utilities examined have summer peaks). The heat-pump systems would be more attractive, if their performance were improved or a technique could be developed for storing off peak energy for use during periods when the heat-pump capacity is inadequate to meet the load; in current systems, straight resistance heating is used in such situations. Clearly, more analysis is required in this area.**

BACKUP POWER WITH ENERGY SOURCES OTHER THAN ELECTRICITY

It was noted earlier that the cost of providing backup for solar equipment from relatively expensive electric-generating equipment may be so great that it would be preferable to provide backup by using seasonal storage systems or relying on gas In fact, it has been suggested that electric utilities, with their high capital costs, are uniquely unsuited to providing backup for solar equipment.[37] **Analysis presented in volume II shows that for large buildings (and for single family structures which can pipe thermal energy to a central storage site), solar heating and hot water systems capable of providing 100 percent of local requirements may become** economically competitive with **electric heating and hot water in many parts of the country in the relatively near future.**

Table V-11 indicates some comparisons between gas and electric backup. In the gas cases, it is assumed that the system is not connected to an electric grid. Backup is provided by a small, 32-percent **efficient engine burning natural gas to power a heat pump Electricity for lighting and other uses is provided from a generator attached to the heat-pump engine The table indicates that the gas backup alternative may be attractive even if gas prices increase drastically** over **the next few decades This possibility may make it interesting** *to* **consider the possibility of granting preferential allocation of gas to facilities using gas to backup solar facilities and permitting new gas hookups in regions where such hookups are now** permitted if the **gas is used as a solar backup**

[37] Joseph G Ashbury and Ronald O Mueller, "Solar Energy and Electric Utilities Should They be Interfaced?" *Science*, 1954127, p 445(1977)

Table V-n.—Levelized Monthly Costs of Several Kinds of Energy Equipment in a Single Family Detached Residence in Albuquerque, N. Mex. (dollars per month)

Gas price in 2000 (¢/kWh)	0.005	0.011	0.015	0.03	Percent of total energy usage supplied by solar energy
Electric price in 2000 (¢/kWh)	3	4.5	10	—	
Incentive	none	none	**20% tax** credit	20% **tax** credit	
1. Heat pump, electric hot water	156	203	395	—	o
2. Solar heat and hot water, electric heat pump backup					
—High	187(223)	213(250)	309(354)	—	28
—Low	158(1 83)	184(210)	284(315)	—	28
3. Extra insulation, 59 m^2 photovoltaics at $500 kW, electric heat pump backup					
—No batteries	169(207)	196(233)	294(338)	—	52
—20 kWh batteries at $70/kWh	190(228)	215(253)	303(349)	—	45
4. Gas heat and hot water, central electric air-conditioning	116	173	287	500	0
5. Solar heat and hot water backup, electric air-conditioning					
—High	172(21 O)	201 (239)	276(323)	422(469)	41
—Low	1 43(1 70)	172(1 99)	251 (284)	379(430)	41
6. Extra insulation, 50 m^2 photovoltaics at $500/kW, gasfired heat pump/generator backup	157(1 96)	177(21 5)	182(230)	203(277)	**50**
7. Solar heat with central seasonal storage, homes connected with hot water piping, electric air-conditioning in each house					
—High	21 4(292)	233(31 1)	290(383)	—	65
—Low	164(21 2)	184(231)	249(306)	—	65

Notes: All costs in 1976 dollars
( ) = utility ownership

Appendix V-A
Analytical Methods

BACKGROUND

Electric utility load pat ems can be most conveniently summarized in what is known as a "load-duration curve. " The curve for a hypothetical utility is shown in figure V-A-1. It shows the number of hours per year the demand for electricity is greater than or equal to all demands from zero to the annual peak For example, the figure shows that the power company in question had a maximum load of 100 MWe and a minimum load of 25,0 MWe (i. e , the company produced at least 250 MWe for all 8,760 hours of the year). The company met a load which was greater than or equal to 50 MWe for at least 3,504 hours during the year Loads will increase with each new year as a result of population growth and increases in the electricity consumed by each person. The increase in per capita consumption is a result of a shift to electric heating and other electric appliances.

If solar equipment is installed in a significant fraction of the buildings served by a utility, the load pattern which it must meet could be significantly affected. Figure V-A-1 illustrates two extreme possibilities. We assume that curve 1 indicates the load-duration curve which a utility could expect if no solar equipment were installed. If solar equipment requiring supplementary power during a utility's peak demand hours and not during off peak hours was installed, a load-duration curve having roughly the shape of curve 2 would result.

The amount of electricity sold would consequently be reduced, but costs would not be reduced proportionately because a large fraction of utility costs are independent of the amount of electricity generated. In this case, a utility will have proportionately more peaking plants with relatively small capital costs, Unfortunately, such plants are less efficient than large plants in both their fuel consumption and operating and maintenance expenses. Curve 3 indicates a situation where the solar equipment installed does not require supplementary power during the utility's peak demand hours, In this case, more efficient generating facilities (baseload plants and cycling plants) would be used to produce a greater fraction of the total utility load, resulting in a lower cost for each kilowatt-hour generated.

In order to quantify both the extent of the impact and whether it is adverse or beneficial, it is necessary to construct a "typical" utility. From this, several load-duration curves for the utility's operation can be constructed for 1985, involving a variety of scenarios both with and without solar equipment. These hypothetical load-duration curves can then be used to determine the kinds of equipment utilities will have to install to meet the demand of their customers, and the loadfactors for each piece of generating equipment. In turn, electricity costs and the utility's fossil-fuel requirements can be estimated for each scenario,

CHARACTERISTICS OF A "TYPICAL" UTILITY

The model utility examined is as close as possible to a "typical" utility which matches the national average for privately owned electric utilities wherever possible. The following sections briefly outline the physical and financial structure of the utility at the end of 1975.

Figure V-A-1 .—A Typical Load-Duration Curve for an Electric Utility

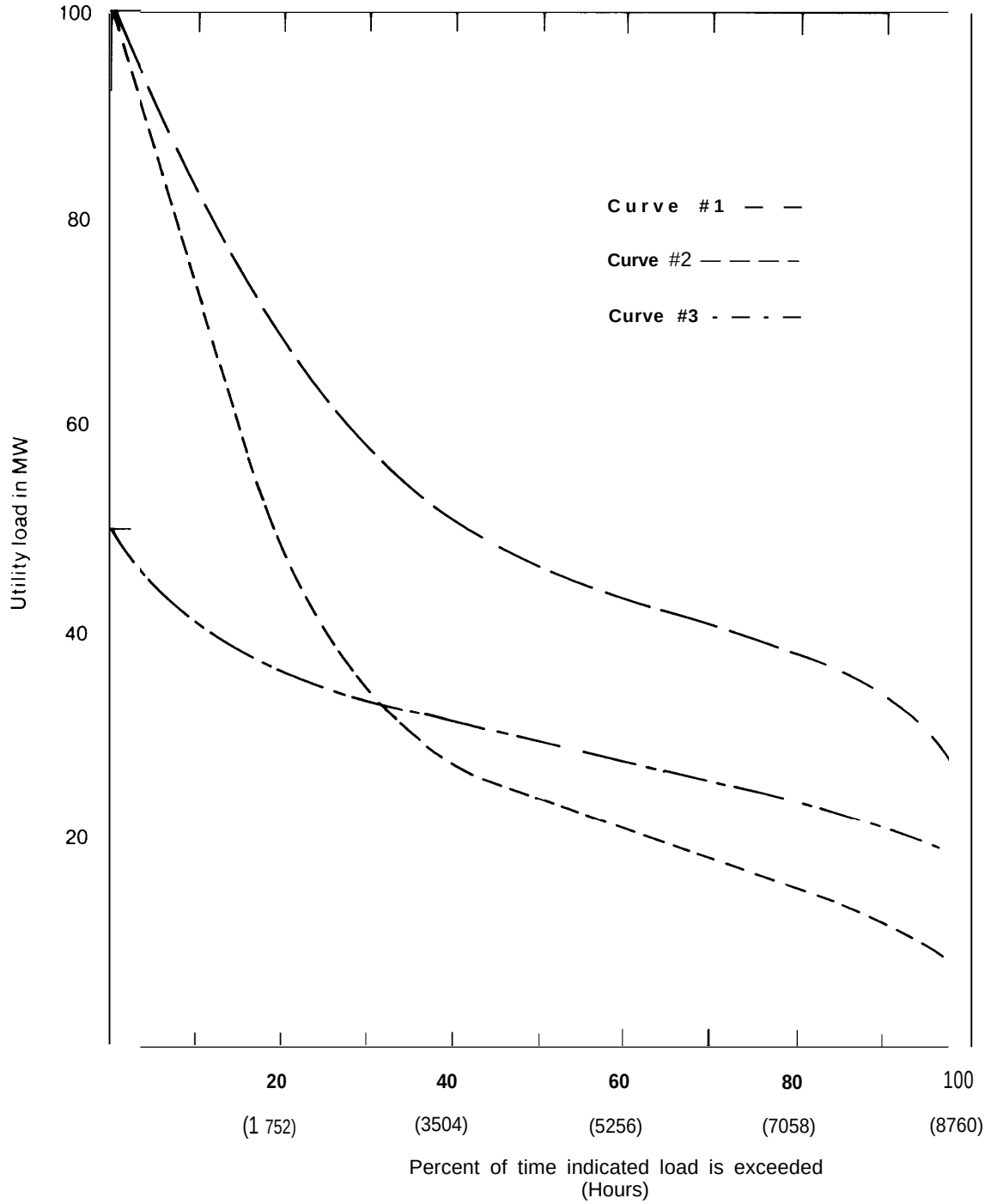

Source: OTA.

CHARACTER ISTICS OF THE MODEL UTILITIES

The hourly loads used to evaluate the cost of generation are constructed by combining the hourly electrical loads which apply to individual building types The method for determining the hourly electric demands of individual buildings is explalned in Volume I I, The number of customers i n a typical private U. S. utility is shown in table V-A-I. The number of buildings of each type used to construct the **model utility used here for analysis is shown in table V-A-2.**

Table V-A-1 .—Average Characteristics of Privately Owned Utilities in 1974

	Number of customers, 1974 average	Demand in millions of kWh, 1974 average
Residential customers	255,000	1,925
Commercial customers	31,703	1,488
Industrial customers	1,491	2,532
Other (railroads, street lighting, etc.)	20	223

SOURCE: *Statistics of Privately Owned Electric Utilities in the United States*, 1974, FPC, page XXXI.

Table V-A-2.—Numbers of Buildings in "Typical" Utility Modeled Which Use Heating and Cooling and Hot Water Equipment*

	Albuquerque	Boston	Fort Worth	Omaha
Single family detached houses				
Baseboard resistance heating	10,470	**8,080**	**11,790**	7,719
Central electric air-conditioning	35,450	**29,823**	**44,130**	48,200
Window air-conditioning	8,163	**5,040**	**11,790**	7,719
Electric hot water	15,840	**18,080**	**16,970**	17,970
Total single family houses	55,920	**55,920**	**55,920**	55,920
Townhouses				
Baseboard resistance heating	**648**	**1,429**	**2,010**	1,350
Central electric air-conditioning	**4,132**	**3,464**	**4,950**	5,610
Window air-conditioning	**424**	**895**	**2,010**	1,350
Electric hot water	**1,043**	**1,211**	**1,120**	1,208
Total townhouses	**6,960**	**6,960**	**6,960**	6,960
Low rise apartments				
Baseboard resistance heating	201	**444**	**624**	419
Central electric air-conditioning	1,282	**1,075**	**1,536**	1,741
Window air-conditioning	132	**278**	**624**	419
Electric hot water	324	**376**	**348**	375
Total low rise apartments	2,160	**2,160**	**2,160**	2,160
High rise apartments				
Fancoil resistance heating	**28**	**62**	**87**	58
Baseboard electric heating	**28**	**62**	**87**	58
Central electric chiller	**196**	**188**	**30**	300
Window air-conditioning	**196**	**188**	**30**	300
Electric hot water	**90**	**104**	**97**	104
Total high rise apartments	**600**	**600**	**600**	600
Shopping centers				
Central electric chiller	**30**	**0**	**30**	30
Electric resistance heating	**15**	**0**	**15**	15
Total shopping centers	**30**	**0**	**30**	30

● All figures are number of buildings not units—the townhouses have 8 units each, the low rise apartments 36 units each, and the high rise apartments 196 units each.

NOTE: Detailed assumptions about the buildings modeled can be found in volume 11, chapter I *Analytical Methods.*

Commercial demands are approximated by simply using **30 shopping centers. A more detailed model would require many more load types–schools, hospitals, etc. industrial demand was approximated as a weekly load which is not weather dependent. Hourly industrial loads used in the utility model are shown in table V-A-3. They were chosen after examining a number of actual utility industrial loads. There are great variations in these loads around the country, and the data used can only show one "typical" pattern. Weekend loads were assumed to be 40 percent of the weekday loads. The total yearly industrial load served by the utility is 2.532 X 1 0⁹ k W h .**

Table V-A"3.—Industrial Load Profile Used

Hour	Weekday	Weekend
1	.2813E + 06	.1125E + 06
2	.2665E + 06	.1066E + 06
3	.2517E + 06	.1007E + 06
4	.2576E + 06	.1031E + 06
5	.2606E + 06	.1042E + 06
6	.2724E + 06	.1090E + 06
7	.2872E + 06	.1149E + 06
8	.3761E + 06	.1504E + 06
9	.4087E + 06	.1635E + 06
10	.4323E + 06	.1729E + 06
11	.4531E + 06	.1812E + 06
12	.4649E + 06	.1860E + 06
13	.4412E + 06	.1765E + 06
14	.4501E + 06	.1800E + 06
15	.4679E + 06	.1872E + 06
16	.4383E + 06	.1753E + 06
17	.3405E + 06	.1362E + 06
18	.3228E + 06	.1291E + 06
19	.3405E + 06	.1362E + 06
20	.3317E + 06	.1327E + 06
21	.3169E + 06	.1267E + 06
22	.3169E + 06	.1267E + 06
23	.3139E + 06	.1256E + 06
24	.3021E + 06	.1208E + 06

LOAD DIVERSITY

The load diversity factor used in forming an aggregated utility load was determined as follows:

1. **It was assumed that heating and air-conditioning loads had no diversity, since all buildings in the area would be affected by approximately the same weather at approximately the same time. (This is a conservative assumption. Most utilities cover areas sufficiently large enough to expect some weather diversity. Tielines can be used between widely spaced utilities to even out weather loads.)**
2. **It was assumed that the hourly variation of "miscellaneous electric loads" and domestic hot water loads was the same for each building of a similar type. When they were added, however, it was assumed that each sequence started at a different time. The spread in "start times" was assumed to be the spread during which people wake up in the morning, eat, and go to work which, in turn, was assumed to be the same as the spread of traffic during rush-hour peaks in major cities (i. e., a normal distribution with a standard deviation of approximately 1 hour).**

This technique is expressed quantitatively in the expression below:

$$f_N(t) = \frac{N}{\sigma\sqrt{2\pi}} \int_{-\infty}^{\infty} f(t+x)e^{-x^2/2\sigma^2}dx \quad (1)$$

where f(t) is the hourly load profile of an individual house, $f_N(t)$ is the hourly load profile of an aggregate of N such individual houses if N is large and if "wake-up times" are distributed in a Gaussoan distribution with a standard deviation of ó hours. The results of this smoothing for a variety of different values of the standard deviation are shown in figures V-A-2 and V-A-3.

SIZING GENERATING EQUIPMENT

The generating equipment installed by the utility depends on the load-duration curve (which characterizes customer demands), costs of purchasing and operating alternative types of generating equipment, kinds of financing available to the utility,

Figure V-A-2.— Ratio of Peak Demands to Average Demands as a Function of the Standard Deviation of "Wake-Up" Times

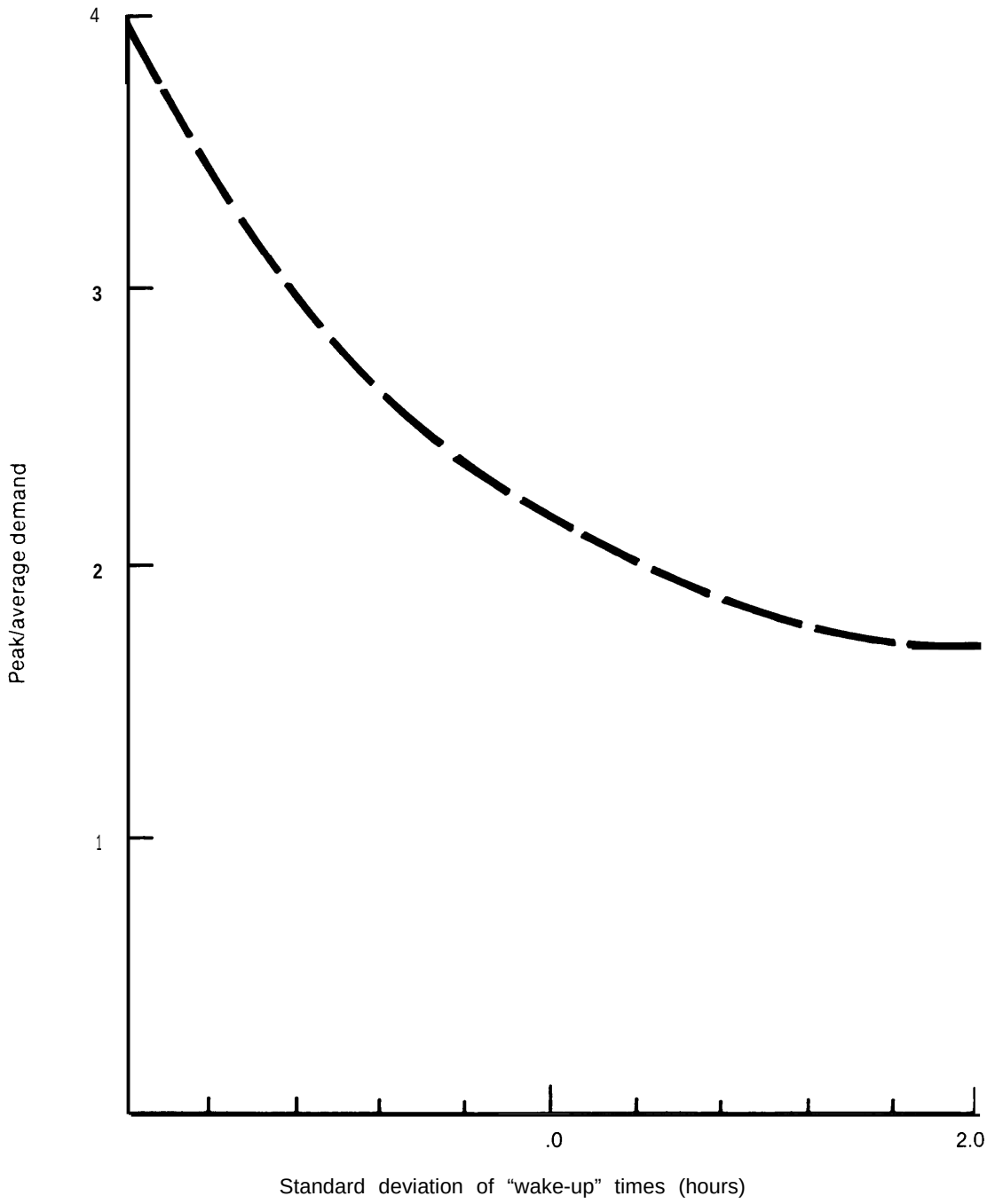

Source: OTA

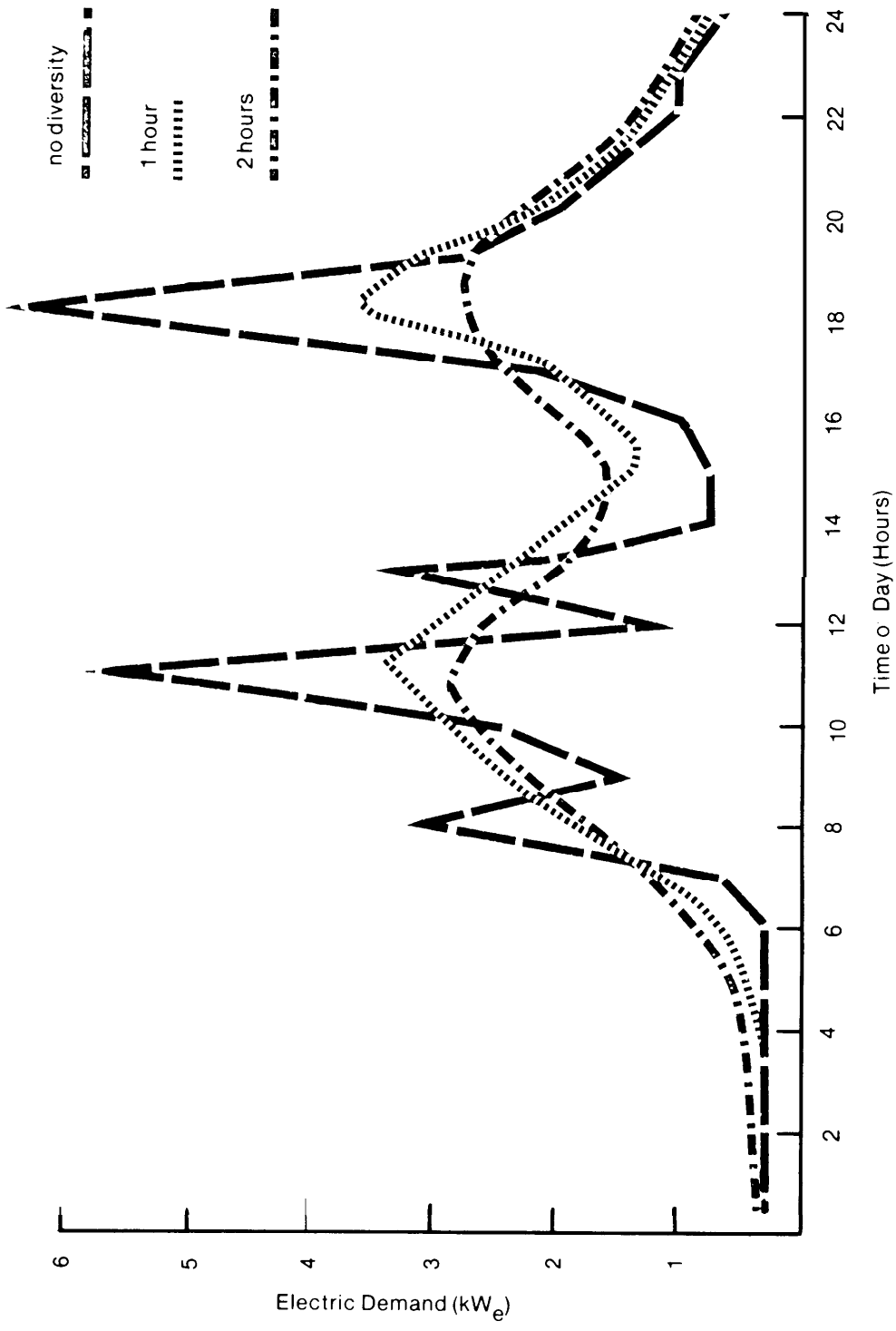

Figure V-A-3.—Hourly "Miscellaneous" Electric Load Profile for Single Family House With Different Types of Diversity

Source OTA.

and current and projected **fuel costs. As selecting the best mix of generating equipment is a complex task, a greatly simplified approximation of the techniques actually employed by utillties is used, The selection of the appropriate mIX of such plants for meeting any load-duration curve is dominated by the fact that: (1) larger plants have relatively high efficiencies and high initial costs and, as a result, are profitable only if operated for a large fraction of the year; and (2) smaller gas turbines and internal combustion systems are relatively inexpensive to purchase, but have relatively high-cost fuel consumption and are thus best used in situations where they operate only a few hours each day Larger plants, therefore, are used to meet the "baseload" requirements of the utility (the loads which will be constant throughout the year), with the smaller plants used for intermediate and "peaking" purposes when the demand is greater than the baseload plant capacity**

Storage can be used to meet some demands during peak periods If the utility has facilities **for storing energy. Peaking plants would then be used only when storage output capabilities were exhausted**

The heuristic arguments **given above can be quantified quite easily if a few simplifying approximations are made The basic parameter used to evaluate a utility system is the total "levelized" annual cost of producing electricity (which is called C_T in the following discussion). This cost is the sum of the cost of capital invested in equipment and the average annual fuel, operating, and maintenance costs, Following the notation developed in the discussion of economic and financial analysis found in volume 11, chapter 1, the levelized annual cost of a piece of equipment is given as follows:**

$$\text{Cost} = k_1 \times (\text{Initial equipment cost}) + k_2 \times (\text{amount of fuel used annually}) + k_3 \times (\text{annual operating cost}) \quad (2)$$

Here k_1 is the effective cost of capital, k_2 is a "levelized" fuel cost (which may differ from current fuel costs because of projected fuel price increases), and k_3 is a multiplier leveling the presumed inflation of operating costs.

The annual cost of operating a given piece of generating equipment can then be written as follows:*

$$C_n = k_1 K_n C_n + T K_n (k_{2n}/\eta_n + \alpha_n k_3) \quad (3)$$

where:

C_n = annual cost ($/year)
k_1 = cost of capital (1/year)
k_{2n} = levelized fuel cost ($/kWh)
k_3 = multiplier for O&M (dimensionless)
K_n = size of the plant (kW)
C_n = cost of the equipment ($/kW)
T = number of hours per year equipment is used (hours/year)
η_n = the efficiency of the equipment (dimensionless)
α_n = O&M cost ($/kWh)

The subscript n refers to the type of plant where:

n = 1 for a baseload plant
n = 2 for an intermediate or cycling plant
n = 3 for a peaking plant

The cost per kW_e of this equipment can then be written as follows:

$$C_n = C_n/K_n = a_n + b_n T \quad (4)$$

where

$$a_n = k_1 C_n \text{ (fixed cost)}$$
$$b_n = k_{2n}/\eta_n + \alpha_n k_3 \text{ (variable cost)} \quad (5)$$

This analysis is somewhat artificial in that it has been assumed that operating costs are directly proportional to the amount of electricity generated. In fact, of course, these costs are a more complex function of operating time and will not be zero even when no energy is being generated. A straightfor-

* Index

ward improvement to the current model would be to assume that the operating costs were of a form X + YT, but the current method was chosen for simplicity. Another approximation which has been made is that the efficiency is independent of the operating strategy.

The utility's total operating costs can then be approximated by examining the load-duration curve. Figure **V-A-4 (which is an inverted load-duration curve) illustrates the sequence in which loads are met by generating plants. T(D) is the number of hours per**

Figure V-A-4.— Inverted Load-Duration Curve of a Typical Electric Load

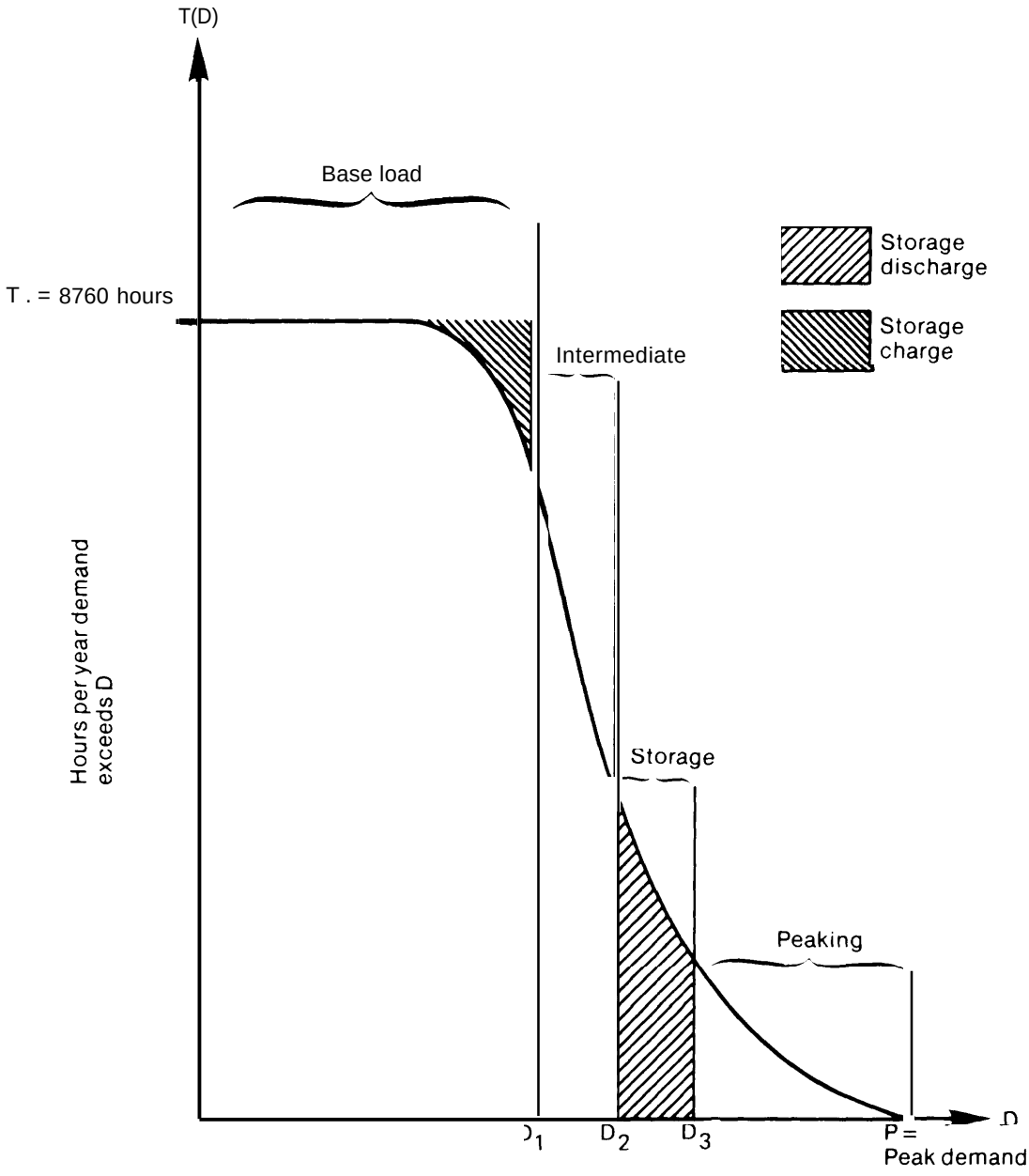

Source: OTA.

year when the utility's load exceeds D kilowatts. When there is no storage, the approximate cost is given by:

$$C_T = b_1 \int_0^{D_2} T(D)dD + b_2 \int_{D_1}^{P} T(D)dD + b_3 \int_{D_2}^{} T(D)dD \quad (6)$$

The optimum set of equipment to meet the loads is then determined by minimizing this function with respect to D, and D,. This minimum occurs when:

$$T(D_1) = \frac{a_2 - a_1}{b_1 - b_2}$$
$$T(D_1) = \frac{a_3 - a_2}{b_2 - b_3} \quad (7)$$

The optimum size of the plants is then given by:

(capacity of baseload plants) = D_1
(capacity of intermediate plants) = $D_2 - D_1$
(capacity of peaking plants) = $P - D_2$

The approximate cost of generation for the year is then given by using these quantities in equation [1).

Provision for Reserve Margin

Two major approximations have been made in obtaining costs in this way: (1) no provision is made for maintenance cycles, the need to maintain reserve capacity for unanticipated failures, and the need to maintain some capacity as spinning reserve, and (2) no provision is made for the costs associated with starting or shutting off a plant and the inefficiencies of running at partial loads.

The first difficulty is handled by simply increasing the assumed capacity of each type of plant by *20* percent. If the analysis shows that an optimum size for baseload plants is D_1, it will be assumed that the utility actually installs baseload capacity equal to (1.2)D_1. In actual utilities, these reserve margins are computed by carefully analyzing the reliability and maintenance schedules of each plant in the system,

The second problem can only be eliminated with a detailed examination of the actual sequence with which plants are turned on and off. However, this is beyond the scope of this study. Choosing appropriate average values for operating costs and efficiencies should produce results which are sufficiently close to those of a detailed model, and serve the purpose of looking for major impacts of different load patterns.

Transmission and Distribution Costs

In addition to generating costs, the utility will have expenses associated with transmission and distribution. These will vary greatly, since they are a function of the spacing of the utility's generating facilities and the location of its customers. In this simple model, it is assumed that the transmission and distribution costs are in direct proportion to the utility's peak generating capacity. While generating plants represent approximately 44 percent of the total value of electric utility plants and equipment, approximately 60 percent of the new capital invested by the electric utilities in recent years has been invested in generating equipment and this trend is expected to continue (see table V-2 in the main text). ' [2] It is therefore assumed that for each dollar invested in generating capacity the utility invests $0.67 in transmission, distribution, and other equipment.

I n addition, the cost of maintaining transmission and distribution facilities is assumed to be proportional to the total investment in such facilities. Maintenance of transmission and distribution equipment in 1974 cost privately owned electric utilities in the United States approximately 3.3 percent for every dollar invested in such equipment.[3] It

---

'*Statistics of* Privately *Owned Electric Utilities in* the *United* States, 1974, Federal Power Commission, p xx I

226th Annual E lectrical Industry Forecast, *Electrical World,* September 15, 1975, p 49

'*Statistics of Privately Owned Electric Ut///tles In the United States, 1974, Federal Power Commission, pp xxx VI, xxx vii, arrd xx I*

is **therefore assumed that the annual transmission and distribution operating expenses are 0.033 x (the investment in transmission and distribution equipment) = 0.022 x investment in generating equipment).**

The costs of generating facilities fuel costs and operating costs actually used in the analysis are summarized in table V-A-4. Some of the characteristics of the solar energy equipment examined are summarized in table V-A-5.

Table V-A-4.—Characteristics of Equipment Used in the Utility Model

1. Generation costs	Capital costs* $/kW	Cycle efficiency	Levelized fuel cost ($/kWh)	Variable O&M ($/kWh)
Albuquerque				
Nuclear	**796**	0.328	0.0056	0.00072
Coal	**691**	0.338	0.00682	**0.00147**
Combined cycle	**292**	**0.42**	**0.020**	**0.0012**
Boston				
Nuclear	**845**	0.328	0.0056	0.00072
Coal	**713**	0.347	0.00760	0.00189
Combined cycle	**292**	0.42	0.020	0.0012
Fort Worth				
Nuclear	**748**	0.328	0.0056	0.00072
Coal	**725**	0.327	0.00456	0.00214
Combined cycle	**292**	0.42	**0.020**	**0.0012**
Omaha				
Nuclear	**769**	0.328	0.0056	0.00072
Coal	**668**	0.338	0.00626	0.00148
Combined Cycle	**292**	0.42	**0.020**	**0.012**

II. Transmission and distribution costs
O&M—O.022 of investment in generating capacity
Capital charges—0.67 of generating capacity costs
Efficiency of T&D—O.91

III. Other costs
Cost of capital —O.15
Overhead–0.021 $/kWhr
20% excess generating capacity installed

"Capital costs include an allowance for "fixed operating costs" computed by dividing the fixed operating costs per year by the levelized fixed charge rate.

SOURCE: Technical Assessment Guide, EPRI, August 1977. *Statistics of Private/y Owned Electric Utilities,* 1974, Federal Power Commission.

Table V-A-5.—Assumptions About the Nonconventional Systems Used in the Utility Impact Analysis

1. **Albuquerque**

Single family house

–SF-2
Flat-plate collector—30m²
Thermal output
Low-temperature storage—200 kWh

–SF-2
East-west axis tracking collector—92m²
Photovoltaic and thermal output
Low-temperature storage—200 kWh
Battery storage—23 kWh

—IF-2
Flat-plate collector—59m²
Photovoltaic output
Battery storage—20 kWh

–SF-3
Flat-plate collector—30m²
Thermal output
Low-temperature storage—200 kWh

Table V-A-5.—Continued

–SF-3
Off peak purchase of electricity y
Flat-plate Collector—30m2
Thermal output
Low-temperature storage—232 kWh

High rise apartment buildings
—HR-2
East-west axis tracking Collector—4,263m²
Photovoltaic and thermal output
Low-temperature storage— 17,000 kWh
Battery storage– 170 kWh

II. Boston

Single family houses
—SF-2
Flat-plate collector—45m²
Thermal output
Low-temperature storage—200 kWh

–SF-2
East-west axis tracking collector—92rn²
Photovoltaic and thermal output
Low-temperature storage—200 kWh
Battery storage— 12 kWh

—IF-2
Flat-plate Collector—59m2
Photovoltaic output
Battery storage—20 kWh

High rise apartment buildings
—HR-2
East-west axis tracking collector—4,263m²
Photovoltaic and thermal output
Low-temperature storage— 17,000 kWh
Battery storage— 170 kWh

III. Fort Worth

Single family houses
—SF-2
Flat-plate collector —40m²
Thermal output
Low-temperature storage—200 kWh

—SF-2
East-west axis tracking collector—92m²
Photovoltaic and thermal output
Low-temperature storage—200 kWh
Battery storage— 12 kWh

–IF-2
Flat-plate collector—59m²
Photovoltaic output
Battery storage—20 kWh

High rise apartment buildings
–HR-2
East-west axis tracking collector—4,263m²
Photovoltaic and thermal output
Low-temperature storage— 1,700 kWh
Battery storage— 170 kWh

IV. Omaha

Single family houses
–SF-2
Flat-plate collector—40m²
Thermal output
Low-temperature storage—200 kWh

–SF-2
East-west axis tracking collector—92m²
Photovoltaic and thermal output
Low-temperature storage– 12 kWh

–IF-2
Flat-Plate collector—59m²
Thermal Output
Low-temperature storage—200 kWh

–SF-3
Off peak purchase of electricity y
Low-temperature storage—31 3 kWh

–SF-3
Off peak purchase of electricity
Flat-plate collector—40m²
Low-temperature storage—293 kWh

High rise apartment buildings
—HR-2
East-west axis tracking collector—4,263m²
Photovoltaic and thermal output
Low-temperature storage— 1,700 kWh
Batteries— 170 kWh

—HR-2
(seasonal storage)
Flat-plate collector—4,100m²
Thermal output
Low-temperature storage—1,200,000 kWh

NOTE: SF-2 single family house with heat pump and electric hot water.
IF-2 well-insulated single family house with heat pump and electric hot water.
HR-2 high rise apartment buildings with central electric chiller, for coil resistance heating, central electric hot water.
SF-3 single fmaily houses with window air-conditioners, baseboard resistance heating, and electric hot water.
SF-3 off peak heating and hot water (with or without solar), window air-conditioners, electric resistance furnace, and electric hot water.
SF-3 off peak heating, cooling, and hot water (with or without solar), central electric chiller, electric resistance furnace, and electric hot water.

Chapter VI

LEGAL AND REGULATORY ASPECTS OF ONSITE SOLAR FACILITIES

Chapter VI.– LEGAL AND REGULATORY ASPECTS OF ONSITE SOLAR FACILITIES

Page

Introduction 175

Solar Rights: Protecting Access to Sunlight 176

Introduction. 176

Existing Laws: Adequate Sunright Protection?. 176

NewDevelopment. 176

Zoning 176

RestrictiveCovenants. , ... 176

Express Easements. 177

Land-UsePlanning 177

TransferableDevelopment Rights. . . . 178

Existing Developments. 178

Should the Federal Government Enact National SolarAccessLaws?. 178

Status of State Legislation 179

Building Codes and SolarSystems 180

Introduction. 180

Do the Model Building Codes CoverSolarSystems?. 181

What Solar System Standards Are Needed? 182

Page

What Position Have Building Officials Taken on Solar Facilities? 182

State Standards. 183

State Certification. 183

OnsiteSolarFacilities and Public Utilities. . . . 184

Introduction. 184

Utilities: DoRates or Service Practices DiscriminateAgainst OnsiteSolarUsers?. 184

Conventional RateStructure 184

Selling Energy to a Utility. 186

RegulationsCovering Discrimination 187

AreOnsiteSolarSystemsSubject to Regulation as PubiicUtilities? 190

Ownership 191

Electricity, Steam, or Heat? 192

Can a UtilityOwnanOnsite Solar Facility? . 192

Municipal Utilities. 194

Cost-Sharing Issues 194

What RightsWill Utilities Have to Aquifers and OtherGeological Formations Used for Thermal Storage? 195

Chapter VI
Legal and Regulatory Aspects of Onsite Solar Facilities

INTRODUCTION

Onsite solar facilities are controlled by laws and regulations often written with entirely different energy systems in mind. That being the case, this study finds surprisingly few barriers to large-scale installation and operation of onsite solar facilities. Existing legal barriers are almost entirely inadvertent.

These barriers can delay the introduction of solar equipment, but in most cases they can probably be removed with routine regulatory action. Resistance to changes in zoning or building codes, for example, generally arises when an interested party will be adversely affected. It is not likely that builders, owners, labor unions, or public officials will perceive onsite solar generation as a threat.

The exceptions to this generally optimistic conclusion are the laws and regulations governing public utilities. Most statutes and regulations governing energy generating equipment assume that energy would be supplied primarily by large regulated utility companies which would enjoy a "natural monopoly" in a given region. If small facilities become economically competitive, however, the only natural monopoly may be systems for transmitting and distributing energy. It is important to notice that most of the regulatory issues raised in connection with small solar energy devices also apply to conventionally powered on site cogenerating equipment.

Application of existing utility regulations to onsite energy systems is frequently ambiguous, sometimes contradictory, and occasionally inadvertently discriminatory. Problems can arise if utilities attempt to own and operate onsite equipment, and if organizations other than utilities attempt to generate solar energy for sale. Regulations governing the rates charged by utilities for backup power and the price at which they will be willing to purchase onsite power generated in excess of onsite needs can have an enormous effect on the cost of solar energy computed by nonutility owners of solar equipment.

Existing rate structures, however, have been designed without attention to the problems of solar equipment and the analytical basis for determining equitable rates is only beginning to be established. Although regulated natural gas prices were designed to benefit gas consumers, the policy tends to reduce the attractiveness of solar energy devices.

How these ambiguities are resolved can have profound effect on the future of the solar energy industry. Regulations can affect the designs chosen and patterns of ownership, and they can serve to retard, stifle, or stimulate the development of the industry. It is clearly an area where doing nothing could translate into a policy of restraining the growth of the solar industry.

SOLAR RIGHTS: PROTECTING ACCESS TO SUNLIGHT

INTRODUCTION

An investment in a solar installation must be considered insecure unless the owner can be assured that the collectors will not be shadowed by new construction or vegetation during the useful life of the equipment. Protecting this access to sunlight can be difficult, since no property owner in the United States has an absolute legal right to sunshine.[1] If procedures to ensure some such protection cannot be developed, concern about "sun rights" could present a major barrier to the use of solar energy, It may not be easy to provide such protection in densely populated areas or in areas graced with large trees, In some cases–particularly older residential neighborhoods — it may be impossible to ensure access to sunlight for all buildings. A considerable amount of protection can be provided, however, with imaginative use of existing laws, zoning ordinances, and covenants; it seems unlikely that additional Federal legislation would be able to contribute usefully to the resolution of these problems.

EXISTING LAWS: ADEQUATE SUN RIGHT PROTECTION?

New Development

Imaginative work is needed to determine how best to use existing laws. Although local governments are able to help protect sunrights, under existing statutes this power usually is not used to help solar equipment owners.

ZONING

The power to zone can literally shape a community from broad outline to minute detail, The zonin$_g$ authority power is broad enough to enable States and municipalities to assure solar access in new subdivisions, shopping malls, industrial parks, and small community developments, Existing zoning regulations may direct the purpose for which land may be used, control building heights and orientation, and govern lot sizes, yard requirements, the appearance of buildings, property, and secondary structures.

If maximum use of solar collectors is desirable, it may prove useful to adopt mandatory minimum or uniform height regulations similar to rules that now limit building heights. ' Since zoning laws generally allow underdevelopment, problems are foreseeable. For example, if a property owner in an area zoned for 16-story development builds only a 4-story building, shading problems could ensue. Perhaps economic incentives will make such cases rare.

RESTRICTIVE COVENANTS

The numerous local building covenants and architectural review boards provide another opportunity for protecting sun rights in a community but may also present problems for solar equipment. These covenants are private legal devices which are typically in the form of reciprocal promises in each deed of a subdivided tract. They can be used to provide detailed guidance about the kinds of architecture and the building materials which will be permitted in the region covered. Since many early solar collectors are likely to be ungainly (if not outright ugly), it is possible that the use of solar devices will receive unfavorable treatment by local organizations reviewing compliance with the building covenants. The problem is likely to become much more difficult if tracking collectors begin to enter the market in significant numbers. The unattractive appearance of the inexpensive solar water heaters in Israel has apparently presented a major problem for manufacturers in that country, and there are isolated

' *Fountainbleau Hotel Corp. v Forty-five Twenty-five, Inc., 114 So.* 2d 357,181 Fla Supp 74 (1959)

* Such a law may guarantee each structure enough sunlight for a hot water heater or other roof collectors, but would obviously not meet the needs of vertical solar collectors (including windows) that are part of a structure's wal ls

instances of local opposition to rooftop solar systems **in the United States. It r-nay be useful to anticipate the problem and develop regulations which would permit solar facilities** in which some care has been taken to minimize pipe-farms on rooftops while permitting enough flexibility **in design to ensure efficient performance of the equipment. Clearly, there will have to be some compromise between performance and aesthetics.**

The advantages of using restrictive covenants as a means of protecting sunrights are threefold: (1) covenants can be used to thwart impending interference of solar access (usually by injunction) before construction begins, thus assuring a continuous supply of sunlight; (2) they cost the Government nothing; and (3) State or local governments could encourage or require their use in new developments.

EXPRESS EASEMENTS

Express easements provide another private legal device to protect access to sunlight in both new and existing developments. An easement confers the right to use (not possess) specified parts of another's property for a special purpose. A property owner, concerned about shading, could bargain with a neighbor for an unimpeded path of sunlight over the neighbor's land. Easements, which may also be leased, are binding on subsequent owners of both parcels **in many States, but in others new legislation may be necessary to assure continuity of access to sunlight. Something of value is traditionally given in exchange for land (although some courts don't require it), and the agree**ment must be in writing to be enforceable.

if a State views easements for light and air as benefiting a person (i. e., "in **gross") rather than a parcel of land, the State may not enforce the agreements against subsequent** owners, although a subsequent **owner probably could, To attain enforcement, a State can enact a short, simple statute stating that such easements must include the vertical and horizontal angles over adjoining property; terms and conditions of the grant; and any** compensation to be paid to any party in**volved. The legislation should also assure the recording of express solar easements along with other land records.**

Colorado has already enacted such legislation, and Florida, Maryland, and Arizona are considering nearly identical bills.

The advantages of express easements are: they cost governments almost nothing; they allow highly motivated individuals to act on their own; they may offer more protection than zoning laws, which can be changed; and they are adaptable to specific needs of different property owners.

Disadvantages are their transfer with the sale of land cannot be forced, their cost is uncertain, enforcement through the courts could be costly, and the would-be owner of a solar structure must bear the entire cost of an easement.

LAND-USE PLANNING

Commonly used techniques that could promote solar utilization in new developments include comprehensive city or county plans, energy impact statements, and flexible zoning techniques.

Many States use comprehensive plans to guide long-range policy in local zoning. Some State courts require that local zoning agree with a comprehensive plan. At least two States have considered including solar energy elements in their comprehensive plans.

Nine States require that environmental impact statements discuss the effects of projects on energy consumption — two require analysis of measures to conserve energy resources,[2] The developers of large tracts of land must usually file impact statements under State laws, and this procedure might be used to assure consideration of solar **energy utilization. Colorado has considered**

[2] Corbin Crews Harwood, *Using Land to Save Energy* (Cambridge, Mass Ballinger Publishing Co , forthcoming)

such a bill.[3] The same Colorado bill would require that subdivision regulations include standards and technical procedures for solar use.

Flexible zoning techniques include planned unit developments (PUDs) and bonus or incentive zoning. Only a few States specifically authorize PUDs, but some communities use this technique without State authorization. This concept relaxes zoning requirements and allows builders to offer layout, building design, and uses as a single package.

To obtain approval of their plans, developers could be required to indicate where shadows would exist and to justify designs that would create shadows. Bonus or incentive zoning offers governmental rewards in exchange for a developer's inclusion of design elements otherwise not directly required by zoning.

Transferable Development Rights

A much-discussed but little-used approach to land-use planning called transferable development rights (TDR) is uniquely suited to protecting solar access.

Under the TDR concept, rights for development conferred on lots by zoning codes are transferable and can be sold independently of the land. Property owners could sell development rights that they could not exercise because of solar restrictions. For example, the owner of a commercial property that adjoins a neighborhood of single family homes might sell the right to build a tall building to the owner of a lot where a tall building would not cast shadows on solar equipment. Under this concept, a municipality can be a buyer-of-last-resort for development rights in cases where it is necessary to protect access to sunlight for solar collectors The main advantage of the TDR concept is that it permits a municipality to police solar access rights and avoid unconstitutional taking of property without compen sat ion.

' (010 H B 1166(197'6)

The Los Angeles Department of City Planning concludes that its code may be adequate to protect solar access in developed as well as new neigborhoods,[4] Transition neighborhoods, where new commercial development is allowed alongside older residential sections, will be one of the most difficult areas in which to protect solar access. If a newly zoned commercial area is south of an older residential neighborhood, the taller buildings may cause shading problems. Los Angeles zoning regulations deal with this by limiting new structures in such areas to six and three stories, "steppin, down" heights gradually to avoid sharp contrasts between old and new development. [5]

Existing Developments

Assuring the protection of sunrights in neighborhoods can be a difficult problem. Many existing buildings in older commercial areas probably could not be adapted to use solar energy unless basically rebuilt, which means the demand for solar access in these areas may be small. Clearly, it would be desirable to consider solar access when an entire area is to be redeveloped, or even when individual permits for remodeling are issued,

Probably the strongest available technique for protecting sunrights in existing developments is the purchase of solar easements. It may be possible (for a price) for a prospective solar owner to purchase an easement that will require his southern neighbor to cut trees to provide access to sunlight.

SHOULD THE FEDERAL GOVERNMENT ENACT NATIONAL SOLAR ACCESS LAWS?

The Federal power to regulate commerce and provide for "the common defense" is

[4] Charles S Rozzellee, Property Owners' *Rights* to *Sunlight,* Los Angeles Department of City Planning, City Plan Case No .26110 (1976), see p 14

[5] I bid , p 12 An administrative problem could arise if the city were flooded with applications for these special zones

apparently broad enough to **allow Congress to adopt policies protecting the use of solar energy if it so desired.** [b] It **is probably not necessary (and may even be unwise), however, for the Federal Government to intervene in protection of individual access to solar** energy

Solar rights laws will have to be adapted to local conditions, no matter where drafted The variables that must be considered **in access laws include topography, latitude, availability of alternative energy sources, long-term regional growth plans, impacts of past and present zoning laws, and even the relationship of streets to sunlight patterns.**

It is possible, however, that State or Federal encouragement will be needed to motivate local governments to incorporate solar access into their statutes. One expert estimated that only 5,000 of 60,000 jurisdictions with power over land use exercised zoning powers in 1974 [7]

While preemption seems unnecessary, an appropriate Federal role might be a national policy set by Congress. For example, the existence of solar access laws could be a factor in choosing locations **for federally owned, funded, or operated structures. Solar access criteria could be added to the Department of Housing and Urban Development's (HUD) Section 701 Community Development program, which provides financing for land-use planning.**[8] **The overall aim of this program is compatible with the encouragement of solar-access planning, since it is designed to encourage "a more rational utilization of land and other natural resources and the better arrangement of residential, commercial, industrial, recreational, and other needed activity centers, "**

STATUS OF STATE LEGISLATION

A variety of legislation has been proposed on the State level. A bill in Massachusetts (Senate No. 269, 1977) uses the building permit system to protect sunrights. Under this proposed law, those wishing to erect active- or passive-type solar energy units would have to reasonably locate and angle their equipment to minimize the possibility of future interference with it, To get a building permit, the equipment also would have to be reasonably sized relative to the structure. The remaining problem of vegetation in adjoining property would have to be solved by express easement. In land zoned for developments for four stories, the municipal plan-

[b] *Wickard vf I/burn,* 31 7 U S 111 (1 942), a person growing wheat on his own land tor home use — a noncom m ercialactiv ity — w astound to have enough effect on interstate commerce to come under the Congress' power

[7] Peter Welt, *The* Future *of the City New Directions in Urban Planning (New* York Wa tson-Guptill Publications, Whitney Library ot Design, 1974), p 149

[8] Criteria specifically referring to solar access could be added to H U D's Section 701 Community Development progra m, which provides financing for land-use planning that meets certain criteria Sect lon 701(c) *ot the Housing* Act of 1954 (as amended by the *Housing* and Community Development Act of 1974) says that fund swith on l y be ava il a b l e to ap pl i Ca n t s who have on go ing co m prehensive plan n ing processes that inc l ude both a housing element and a l and use ele m e n t The overall a l m of t h is program is compat I-ble with the encouragement of solar-access pl ann ing, sin ce it hopes to enc ou rage "a more rat ional utiliza-tion ot land and other natural resources, and the bet-ter arrangement of resi den t ia1, com m er Cia 1, ind u s-tria 1, recreationa 1, and other needed act i \ ity centers "

The regulations accompanying the 701 program (Title 24, part 600 — Comprehensive Planning Assistance) halve been amended to emphasize energy concerns Section 60072 now states that in selecting priorities, each recipient should consider

(,2) Projections of land use needs and land resource d e v e l o p m e n t including energy fac i l i t ies siting needs

(7) The conservation of energy through land use strategies des igned to reduce energy consumption and the development of policies designed to fac i l i tate the rec overy of energy resources i n a manner compatible with environmental I protec tion

" Energy facilities siting needs" could be interpreted to include "talc i l ities" as small as an array of solar collectors on the roof of a single structure, but a more exp l i c it statutory consideration of sol a r energy needs is rea ll y needed

42 u s C 5301 (c) (5)

ning agency and the municipal governing body would have to approve a proposed solar structure. Before a nonsolar structure could receive a building permit under this legislation, the records would have to show that there was no interference with an approved solar collector.

A Minnesota bill suggests a very different legal approach (Minnesota H.R. 2064, 1976). It would simply grant solar easements to any collector owner. Anyone erecting an object shading the system would have to pay the solar homeowner three times the actual cost of implementing an alternative energy system. Although the penalty section is intriguing, this bill has many problems, including vagueness and unfairness based on the first-come, first-served basis of the law.

Colorado legislation would forbid property owners from allowing their trees and shrubs to grow enough to shade solar collectors between 9 a.m. and 3 p.m. [9] But it is an attempt to deal with the serious problem of vegetation, and the specific times listed in the legislation give property owners a clearer view of their rights than a vague protection of "sunlight necessary for the operation of solar equipment. "

The tiny town of Kiowa, Colo., has enacted a law declaring shadows on collectors to be public nuisances. This nuisance approach could present several kinds of problems: no certainty of protection would exist before a collector was installed, tangled complexity of the nuisance law, and costly lawsuits would be required to settle disputes.

Law journal articles suggest applying water laws used in the West — the prior appropriation doctrine — to solar access, and reviving the old English doctrine of ancient lights [10] [11] No State has, to date, followed either of these suggestions, both of which would require extensive litigation, provide no compensation to the injured solar users, and were not drafted specifically for solar applications.

BUILDING CODES AND SOLAR SYSTEMS

INTRODUCTION

Building codes, specifically applicable to hot water and space heating, air-conditioning, and electrical equipment, seldom contain provisions covering onsite solar systems. Code problems do not appear to have been a major barrier thus far, but it is clearly possible that uncertainty on the part of code officials resulting from a lack of information about solar devices and a shortage of standards and certification procedures for solar systems could result in fragmentation of the solar market, delays, additional expenses, and uncertainty to the builder or owner in the permit application and process. There are, as a result, compelling reasons for enacting mechanisms for inspecting solar equipment similar to those in effect for other heating, cooling, and generating equipment installed in residences or commercial buildings.

The Federal Government, in a HUD demonstration program, developed standards

[9] Colorado S B 38 (1976)

[10] Mary D White, "The Allocation of Sunlight Solar Rights and the Prior Appropriation Doctrine, " *University of Colorado Law Review 47 (1976) See* the extensive reviewin the E nvironmental Law Institute's (ELI) *Legal Barriers* to Us/rig *Solar Energy for Heating and Cooling f?ui/dings,* which was contracted for by the Energy Research and Development Administration, and is an early effort in this direction It is available from E L I (1 346 Connecticut Ave , N W , Suite 620, Washington, D C 20036) for $750

[11] Lawrence Kressel, *"Hanson v Salishan Properties, Inc.,* Preservation of View– Limitations as to Height of Improvements and Architectural Control in Uniform Long Term Lease, *"Env. Law5(1974)* 183

that could be used as models for incorporation in building codes. Certification that solar systems meet those standards could be delegated to approved testing agencies, thereby expediting the building permit process for solar users.

DO THE MODEL BUILDING CODES COVER SOLAR SYSTEMS?

The three most widely used model building codes are:

- The Basic Building Code of the Building officials and Code Administrators (BOCA), found mostly in the East and Midwest;
- The Uniform Building Code of the International Conference of Building Officials (ICBO), found mostly in the West; and
- The Standard Building Code of the Southern Building Codes Conference (SBCC), found mostly in the South.

According to a 1970 survey of local building departments, 63 percent of the 919 cities that had building codes of any kind used one of these three model codes. [1]2

The most widely used standards for electrical wiring and equipment are those of the National Electrical Code of the National Fire Protection Association. Although no exact figures are available, it appears that these electrical equipment standards are even more widely used than any of the three major model building codes. The electrical standards are adopted by reference in the BOCA code (Section 1500.3), but not by the other two model codes.

Building codes define terms, set standards for materials and equipment, describe how materials and equipment may and may not be put together, and provide for enforcement through permits and inspections. Standards generally are either specification standards, which identify materials and equipment that may be used in construction, or performance standards, which set standards that materials must meet. Specification standards are easier to administer, but are inflexible. Performance standards are more flexible, but require more trained personnel, time, and money to administer.

Building codes regulate nearly everything that is constructed or built on land, with few exceptions. Before granting permits for construction, remodeling, or repairs, building officials decide whether plans conform to code requirements. If a plan proposes use of materials and methods that are specifically covered by a building code, approval is routine. If a plan calls for innovative materials or techniques, however, a building official has the discretion to require testing of materials and submission of evidence that the resulting structure will not be inferior to a traditionally built structure.

Most building officials display wide latitude in approving or rejecting materials, equipment, and methods not specifically provided for in the codes. If alternative materials or techniques are to be used, building officials must be satisfied that the resulting structure will be at least equal in strength, fire resistance, safety, quality, and effectiveness to structures assembled with materials and techniques specified in the code. I n such case-by-case showings, applicants may be required to pay for testing at facilities chosen by the building officials, using methods approved under the codes or chosen by them.

For most kinds of construction materials and equipment, nationally recognized standards, test methods, and testing agencies are specified in the codes. Two examples are the Underwriters Laboratories, Inc., for electrical equipment, and the American Gas Association, for gas equipment, For solar energy systems such nationally recognized standards, test methods, and listing agencies do not exist.

Under al I three model codes, heating, ventilating, and cooling appliances must be ap-

[1] Charles G Field and Steven R Rivkin, The Elul/ding Code Burden, Lexington, Mass D C Heath and Co , Lexington Books, 1975, p 43

proved by building officials or carry the label of an approved testing agency or laboratory. A "heating appliance" is presently defined in all codes as a device that generates heat from sol id, liquid, or gaseous fuels, or with electricity, Solar sources are not mentioned, nor are they included in the definitions of ventilating or cooling appliances. In addition, there is no agency to certify compliance and attach labels to solar equipment, nor is there a nationally recognized set of standards on which to base compliance. Solar heating systems are therefore at a potential disadvantage as compared to conventional systems, which can be approved for installation with a simple showing of a label.

Other possible impediments to the use of solar facilities include code requirements for maintaining rather high minimum building temperatures in cold weather, and formulas for determining window sizes. Limitations on awning and roof overhangs may interfere with some passive solar designs. Standards for prefabricated assemblies may result in costly tests to demonstrate weather resistance.

More potential problems include limitations on residential building heights that may preclude roof collectors, chimney and plumbing clearances, application of new standards to remodeling of old buildings, and implied prohibitions against using solar collectors as integral parts of a structure's roof or walls,

WHAT SOLAR SYSTEM STANDARDS ARE NEEDED?

The only unique component of solar heating, cooling, and generating systems is the collector. Once heat is collected, or electricity is generated, it is transported, stored, and utilized by the same type of equipment used in conventional systems. Standards for pipes, ducts, valves, storage tanks, controls, wiring, storage batteries, and other components already exist, even though their use in a solar energy system was probably not contemplated when the standards were written. The primary requirement for new standards is for solar collectors, including photovoltaic and focusing devices.

Problems could result from novel usage of equipment and materials presently covered in the codes, involving risks of leakage or explosion from excessive temperatures, high pressures, corrosion, and other component failures. Standards should address these and other risks, including human contact with hot surfaces or broken glass, contamination of drinking water with toxic coolants if plumbing is not properly installed, and damage to collectors from high wind or heavy snowfalls,

These risks would be relatively low in systems designed for low-temperature uses, such as heating buildings or drying grain, but could be higher in some proposed solar electric systems. Building codes must be amended in ways that apply different standards for material and equipment according to the *use* of the solar energy facility.

WHAT POSITION HAVE BUILDING OFFICIALS TAKEN ON SOLAR FACILITIES?

Few builders have reported difficulties in obtaining building permits to construct solar facilities. The major problem with codes may prove to be an overly lax inspection resulting from untrained inspectors rather than codes so strictly written that they interfere with sound solar engineering. Building codes expert Steven Rivkin has said that, "Rather than serving as a retardant, existing building codes have no bearing at all on the development of solar systems.''[13] It is possible that building officials will continue to look with favor on solar energy systems, and not rigidly enforce codes.

As solar energy systems gain in popularity, some kind of additional code require-

---

' ' AIA Research Corporation, *Early* Use *of Solar Energy In Buildings,* 2 Vols , Washington, D C , August 1976, 211-32

ments will need to be developed. Without specific coverage in model building codes, however, local interpretations of plans or requirements for costly testing could fragment a potential market, result in higher costs of solar devices built to meet the strictest standards found anywhere, and delay building and construction of solar systems.

All appliances face this problem at some time, and the solution has been nationally recognized standards and testing procedures for the various models of equipment and materials Applying the same procedure to solar equipment would put solar energy systems on the same footing as other heating and electric systems

Most building codes are enforced at the local level, often with guidance from State laws but seldom with intervention at the Federal level. As has been noted, where codes are in effect, the majority of communities adopt and adapt the model building codes. The first step toward assuring acceptance of onsite solar facilities as standard equipment is to draft a model set of standards for inclusion in the major building codes. The second is to designate a testing agency to certify performance of solar energy systems.

The effort to develop national standards could be coordinated by the Federal Government There is precedent for this, including an ERDA contract with the National Conference of States on Building Codes and Standards to develop a model code for energy conservation in buildings.

The Federal Government has already developed standards for commercial and residential solar facilities as part of a solar heating and cooling demonstration program administered by HUD. These standards, or some variation of them, are available for incorporation in building codes.

A final Federal role in amending the codes would be to encourage State adoption of standards for solar equipment Federal legislation mandating, encouraging, or providing incentives for State regulations or standards for solar equipment would function within Congress' power to regulate interstate commerce,

Certification is another matter. Federal efforts to certify solar appliances under its HUD standards met with some criticism, and the Federal Government has traditionally been reluctant to favor one commercial product over another. However, because some approved testing agency must be designated as the solar industry grows, the Federal Government might provide seed money for expanding an existing testing agency or creating a new one.

State Standards

States can write their own solar equipment standards, with variations based on State and local conditions, provided that they do not unreasonably burden interstate commerce, One approach would be to adopt standards similar to those already drafted by the Federal Government under the HUD program, on an interim basis, until private-sector standards have been approved. A recently enacted Minnesota law takes this approach, It requires a State agency to promulgate standards for solar heating and cooling systems based on current interim Federal criteria. 14 The law also requires State administrative agencies to update State standards as new Federal standards are adopted or as new technology dictates.

State Certification

States will want to assess the suitability of solar equipment as to safety, health, structural strength, and adaptability to State or local building codes. The Florida Solar Energy Center in Cape Canaveral already is testing and certifying the thermal performance of collectors sold in that State As an interim measure, State certification can provide local building officials with guidelines until a national testing and certification program

[14] Minn Stat §116 H 127 (1976)

can be put in place. Some States may wish to go beyond furnishing guidelines, and can write laws that require local building officials to approve solar equipment that meets State standards and is certified by State agencies.

ONSITE SOLAR FACILITIES AND PUBLIC UTILITIES

INTRODUCTION

State laws and regulations governing the relationships between public and private utility companies and the owners of onsite generating equipment are complex, and frequently ambiguous, largely because these problems have seldom been addressed by regulatory commissions. In the small number of cases where utilities and industries exchange electrical power or process heat, contracts have generally been written in ways benefiting both parties so that no lawsuits have been brought forcing the courts to rule on ambiguities in the law.

The following discussion examines the statutes and regulations that now govern relationships between public utilities and onsite generators of solar energy, and outlines areas where ambiguities exist. It is an attempt to highlight areas where major regulatory problems may exist.

State regulation through State public utility commissions is the primary issue. Federal power authority has been limited to regulation of wholesale rates of interstate sales of electricity, and siting of hydroelectric facilities, and is of less concern in the following analysis. The onsite solar systems, by the very definition of "onsite," are seldom involved in interstate, wholesale sales, although power sold to a utility grid may reach interstate commerce.

UTILITIES: DO RATES OR SERVICE PRACTICES DISCRIMINATE AGAINST ONSITE SOLAR USERS?

Perhaps the most crucial question in utility regulation is whether utilities may adopt rates or service policies that unfairly discriminate against solar customers requiring utility power as backup.

The answer appears to be that current laws will permit discriminatory rates for solar customers if the utility can prove that the cost of providing service to solar customers exceeds the cost of providing service to other customers. Although it cannot arbitrarily set prices or refuse service in an effort to eliminate competition from solar devices, the burden of proving such discrimination may fall on the solar customer.

Difficulties are likely to occur only when an electric utility is involved since gas utilities would, in general, not be adversely affected by a need to provide backup service to onsite facilities. Calculating a rate for both the purchase and sale of electric energy to a utility is an extremely complex problem. The technical and economic bases for such rates are discussed in detail in chapter V. The present chapter focuses exclusively on the legal and regulatory mechanism for setting rates.

Conventional Rate Structure

The price a consumer pays for electricity seldom directly reflects the cost of producing it. In the absence of widespread time-of-day metering, billings usually are based on formulas that allocate peak costs of energy and total monthly consumption according to the historical demand patterns of different categories of customers.

The most common residential electric rate is the "declining block rate, " under which customers are charged a fixed fee for monthly service, with declining rates for each incremental block of energy consumed

beyond the amount **covered by the fixed** fee. For example, the formula might call for a charge of $3 for the first kilowatt hour (kWh), $004 per kWh for the next 100 kWh, and $0.03 per kWh for the next 200. (Examples of actual rate schedules in several cities are listed in **volume I I.) The declining block rate was introduced when marginal costs for electric utilities were declining and utilities were encouraging customers to use more electricity.**[15] **Another frequent practice, designed to increase sales of electricity, is to reduce rates if a house or commercial building is "al I electric. "**

Utilities justify using these rates in today's market by arguing that all-electric customers are more likely to use electricity during the night for heating and cooling than are other types of residential customers, who use electricity for lighting and other purposes during peak hours. '6 The wisdom of continuing a promotional rate schedule in a period of **declining energy reserves, however,** has been seriously questioned in many quarters. President Carter's proposed National Energy Plan would have flatly **prohibited declining block rates.**

Declining block rates can discourage the use of onsite solar power because a large part of a customer's utility bill is based on the first few kwh delivered, power which would probably not be replaced with solar energy.

Larger utility customers are frequently charged on the basis of their peak demand during some specified period. **Such rates are designed to achieve a more direct relationship between consumption and the net generating capacity that must be installed to meet the customer's requirements, Techniques for determining peak demand vary greatly. Some utilities charge according to the peak demand during the previous 6 months, some take the lesser of monthly peak demands, and some percentage of annual demand, and others charge on the basis of spot measurements of demand made without advance notice.**

The impact of such demand rates on customers with onsite facilities can be very great. In some cases, a demand charge could be so high that a purchase of energy at high rates, when onsite equipment failed or when cloudy weather persisted, could negate any savings attributable to the onsite equipment for an entire year. The justice of such charges is a difficult issue to resolve, Providing power to backup random failures of onsite equipment among a large number of small customers can clearly be managed without a large increase in a utility's generating capacity. Relatively high backup charges might be justified, however, if all of these customers abruptly demanded backup power during a prolonged stretch of adverse weather.

Still another rate structure is designed to provide standby service to customers who do not use electricity under normal circumstances, although these rates would not apply to solar customers under the current definition of "standby power.'" [7] **If the definition were changed to cover onsite facility owners, however, the high minimum monthly charge associated with standby rates would not be advantageous to customers with onsite solar facilities,**

Some utilities have considered applying demand charges to residential customers to cover some of the market losses that would be inevitable with widespread installation of onsite solar generators. One such proposal by the Public Service Co., a Colorado utility, was fiercely opposed by solar customers, [18] [19] **who calculated that under such a**

[15] See Berlin, Cicchetti, and G illen, *Perspective on Power,* chapters 1-3

" Letter insertin monthly bill from Potomac Electric Power Company, January 1977

[17] See, for example, Southern California Edison's rate schedule **#5** (standby rates)

[18] Testimony of James H Ranniger, Manager of *Rates of Regulation* for the Publ ic Service Company of Colorado Colorado Public Utilities Commission Investigation and Suspension Docket No 935, Sept 25-26, 1975

[19] Testimony of Dr Ernst Ha bict, Jr , and Dr William Vickery for the Environmental Defense Fund, Colorado Public Utilities Commission Investigation (Op cit)

rate structure a solar heating system that reduced energy requirements by 70 percent would reduce electricity bills by only 35 percent.[20] The Colorado Utility Commission initially granted the utility's request for the rate change, but reversed the decision following a rehearing and ruled that the issue was sufficiently complex to be addressed in a generic rate hearing. " 22

Lifeline rates have been adopted in a few States. " Under this system, the charge is low for the first units of energy. The goal is to ease the burden on low-income consumers.[24] This rate may incidentally benefit solar users whose needs for supplemental sources of energy are small enough to fall within the "lifeline" amount.

A final type of utility pricing is interruptible rates, This traditionally has been available only to industries willing to accept the risk of service interruptions in return for lower costs, Some studies have pointed out that a solar user willing to accept the risk of going without utility service on infrequent occasions could save the utility substantial amounts in capital requirements, justifying a lower rate. I f the peak occurred only rarely, this alternative might be considerably less expensive than additional units of storage or collector area. 25 The National Energy Plan proposes that utility companies be "required" to offer interruptible rates to all customers. [26]

Selling Energy to a Utility

As of today, few utilities are willing to purchase power from customers, although special arrangements have been made with several large industrial customers.[27] I n some cases, the price the utility pays for surplus power reflects only the cost of the fuel the utility would burn to generate an equivalent amount of energy. I n other cases, the price reflects both fuel costs and the cost of equipment the utility would have to install to generate the power. However, there are so few arrangements for sale of surplus power that clear patterns are difficult to identify.

Southern California Edison Co., for example, recently proposed a rate schedule under which it would buy energy from large industrial customers at "the lowest cost of energy provided by any generating equipment in the Bonneville Power District."[28] This is about 3 mills per kwh, a rate that reflects a minimum energy displacement fee. However, in the same proposal the utility offered to purchase energy from a limited number of residential and small commercial facilities at a rate that is essentially identical to the rate the utility charges residential customers. 29

The Gemini Co., which sells devices to connect onsite wind generators and other equipment to utility distribution lines, iden-

---

[20] Gary Mills, "Demand for Electric Rates A New Problem and Challenge for Solar Heating, " *ASH RAE Journal,* January 1977, p 42

[21] In the matter of proposed Increased rates and charges contained in tariff revisions filed by Public Service Company of Colorado, Decision No 87460 (Colo. Pub UtilComm'n, Oct 21, 1975)

[22] Home *Builders Ass'nof Metropolitan Denver v Public Serv Ice Co of Colorado,* Decision No 89573 (Colo Pub UtilComm'n, Oct 26, 1976)

[23] *E g,* Miller-Warren Energy Lifeline Act, 1975, Cal Stats ch 1010 For other examples, *see* Energy Users *Report* (BNA), Dec 16, 1976, p A-25

[24] See "Lifeline Rates – Are They Useful?", *Energy Conservation Project Report, No 4* (January 1976), p 13 (*ECP Report* is a publication of the Environmental Law Institute, Washington, D C) Some authorities question whether the lifeline concept is an effective method to aid lower income groups since these persons often consume relatively high amounts of energy

[25] Feldman and Anderson, *Utility Pricing,* p 120

[26] National Energy Act, Section 513

[27] Thermo E lectron Corporation, *A Study of /rip/ant Power* Generation *in the Chemical Petroleum Refining and Paper and Pulp Industries, June 1976,* U S Dept of Commerce, NTIS PB-255-659

[28] Southern California Edison rate schedule changes proposed in a letter to the Cal ifornia Public Utilities Commission, Feb 2, 1977

[29] Southern California Edison, op cit., Experimental Schedule DC and AC

tifies widely varying patterns of proposed surplus-power prices. Some New England utilities are willing to buy electricity at their own sales price because fuel represents a large fraction of their overall costs. Utilities with low baseload fuel costs have been more reluctant to buy surplus power. [30]

Regulations Covering Discrimination

The rates just described were, except for Colorado, not designed to discriminate against solar equipment, although their impact is not diminished by the lack of an intent to discriminate.

One of the major purposes for public regulation of electric utilities is the prevention of unreasonable discrimination or undue preferences. [31] Nearly every State has a statute prohibiting conduct that favors one class of customer while harming another. Typical statutes proscribe policies that are "unreasonable," "unjust," "undue," or "unlawful.''" Discrimination is a question of fact to be determined on a case-by-case basis by the State utility commission, and it is very difficult to predict precisely how any given discriminatory practice will be analyzed,

As the previous chapter showed, determining fair rates for electric utility power is an extremely difficult process. Uneven solar demands on the utility can result in relatively poor utilization of expensive generating and transmission equipment, but it must be recognized that demands imposed by many nonsolar customers are also very irregular; the only fair measure of the cost of providing backup power to an onsite solar facility is to accurately compute the marginal utility costs incurred in providing such backup.

The parallel question involving a determination of the rate which the utilities can be expected to pay for excess onsite power offered for sale is equally difficult; several very sensitive issues must be resolved. For example, how should the costs of transmission lines be allocated between the price of utility sales and the price charged by onsite generators? Should the utility be expected to purchase energy at rates reflecting the marginal cost of providing the same amount of energy from new utility equipment or simply for the average cost of utility power generated. It will usually not be possible for utilities to pay a rate high enough to meet typical industrial revenue requirements on capital invested in new energy projects. It is possible, however, that special rates could be established which would permit utility purchases at required rates, and it also is possible that, if a utility could sign a contract with a firm guaranteeing purchases over 10 to 20 years, the firm could accept a smaller rate of return on funds invested in the generating equipment. A simple technique for determining the amount which an electric utility can pay for energy purchased was discussed in the previous chapter.

In general, the cases and State utility decisions suggest that utilities have substantial freedom to treat different classes of customers differently.[33] Two *general* principles

---

[30] Ben Wolf, Gemini Corporation, private communication, Apr 27, 1977

[31] To economists, "price discrimination" is value neutral and includes any case where the same product is sold at more than one price For purposes of this discussion, "discrimination" is used in its more general sense to refer to any distinction in favor of or against a person The economists' definition pinpoints the issue nicely what is the relevant "product" or service? The way the product is defined will determine a fair price

[32] Priest, *Principles of Public Utility Regulation*, 1 2/36-88

[33] See, e g, Re Pacific Gas & Elec Co , 9 P U R 3d 97 (Cal Publ Util Comm'n 1955); Re promotional Activities by Gas and Electric Companies, 68 P U R 3d 163 (N Y Pub Serv Comm 'n 1967), Re Promotional Practices of Electric and Gas Utilities, 65 P U R 3d 40s (Corm Pub Util Comm'n 1966); Re City Ice & Fuel Co , 260 App Div 537, 23 N Y S 2d 376 (1940) But utility comm issions have not been reluctant to strike down promotional practices they found to be of little value to the utility or the bulk of its customers Re Southwest Gas Corp , 61 P U R 3d 467 (Cal Pub Util Comm'n 1965), Re Carolina Power & Light Co., 52 P U R 3d 469 (N C Util Comm'n 1964); Re Portland General Elec Co , 67 P U R 3d 417 (Ore Pub Util Comm'n 1967)

emerge: (1) preferential treatment is more acceptable if it produces indirect benefits to all customers; and (2) utilities may treat customers differently if there is a reasonable economic basis for doing so, that is, costs to the utility are clearly different. For example, discrimination in favor of solar users that would reduce rates for all customers by reducing the utility's costs would be acceptable.

It seems clear that public utilities may discriminate either against or in favor of onsite solar users if the discrimination either benefits all customers or is based upon a reasonable economic basis. Discrimination could be either as service practices (e. g., specific times at which backup power could be used) or as rate practices (e.g., higher rates for less energy use).

A public utility is subject to State regulation in addition to antidiscrimination laws, by virtue of being a public utility. Fundamental to the concept of a public utility is its dedication of property to serve the public without discrimination. Almost every State has a statutory provision requiring utilities to "furnish adequate and safe service,"[35] "provide such service, instrumentalities, and facilities as shall be safe and adequate and in all respects just and reasonable,"[36] or "furnish reasonably adequate service and f abilities."]

A public utility "may not pick and choose, serving only the portions of the territory covered by their franchises which it is presently profitable for them to serve."[38] As with most issues in public utility regulation, the duty-to-serve requirement is interpreted on a case-by-case basis with "reasonableness" and the "public interest" as the touchstones.

A public utility cannot refuse to provide backup power to onsite facilities unless it can demonstrate a compelling case that backup service would cause substantial harm to the utility's existing customers. Refusal to provide service would violate not only Federal antitrust laws, but also the utility's common law and statutory duty to provide utility service, Of course, the duty to provide *adequate* service has some limits; utilities may be excused from providing service when prevented by acts of God, labor disputes, and shortages of fuel supply. " In some cases, utilities have been excused from providing service where to do so would be unusually expensive, although there is substantial precedent to the contrary."[40]

These laws would not, however, prevent adoption of a policy which would discriminate against new utility customers who did not use solar equipment. Existing statutes appear to permit a regulation which would prevent a utility from providing new *service* to a customer not using solar energy equipment.

Some States have taken measures to restrict gas to certain customers or to eliminate its availability for some uses. For example, New York banned the use of gas in swimming pools and in buildings without adequate insulation. " A few States have banned its use in decorative lighting.

---

[34] Priest, *Principles of Public Utility Regulation, 1288*

[35] Or Rev Stat $757020 (1974)

[36] N Y Pub. Ser Law §65(McKinney)

[37] Wis Stat Ann $196,03(1) (West) For a general discussion of a utility's duty to serve, see Note, "Utility's Duty to Serve, " *Columbia Law Review 62 (1962) 312;* and Donald P. Hodel and Ronald G. Wendel, "The Duty and Responsibility of Oregon Public Agencies to Provide Adequate and Sufficient Electrical Utility Service, " *Oregon Law Review 54 (1975). 539*

[38] New *York & Queens Gas Co. v McCall,* 245 U S 345, 351 (191 8).

[39] Priest, *Principles of Public Utility Regulation,* a:237-238.

[40] I bid., pp. 240-242.

4. New *York Pub. Serv. Comm'n, Case 26286 [Apr. 16,1974); and National Swimming Pool Institute v Alfred Kahn, 364* N.Y S 2d 747,9 P U.R 4th 237 (1974). See also "Ban on Heated Pools Leaves Californians Boiling," New *York Times,* Feb. 5,1975

The legal principles involved in rate regulation are similar to those discussed for service discrimination. The same prohibitions on discriminating among customer categories apply, as do the ambiguities as to what constitutes "disc rumination." 42

A rate structure that adversely affects solar energy users, however, may be difficult to challenge under current case law. Several cases have upheld the legality of rate structures that subsidize a particular class of customers (al l-electric customers) despite antidiscrimination laws. In 1965, a court interpreted an antidiscrimination statute as barring only "unjust" discriminations, and concluded that only arbitrary d incriminations are unjust:

> If the difference in rates is based upon a reasonable and fair difference in conditions which equitably and logically justify a different rate, It is not an unjust discrimination [43]

Part of the difficulty results from the fact that the utility can argue that its cost structure justifies a discriminatory rate and the challenger is hard-pressed to rebut the extensive analysis which can be conducted by the utility about its unique cost structure, although in cases requiring a calculation of a fair backup charge for solar energy (and a fair price to pay for excess onsite energy) utilities can be as confused as the interveners.

Until the late 1960's, cost per unit of electricity for at least some types of powerplants declined steadily, Utilities could therefore argue that promotional rate structures would, over time, bring new businesses that would justify additional powerplants. These new plants would then lower the bills of all customers of the utility. More recently, the lack of new sites for low-cost hydroelectric power, changes in regulatory practices, and increased environmental costs have forced the cost of new power to rise steadily.[44]

In these circumstances, promotional rates lose much of their appeal. A New York court recognized the common impact of rising fuel prices in a recent decision overturning a subsidy for all-electric homeowners. 45 The subsidy, which was to run for a year, was intended to lessen the impact of higher electric rates on residential customers who had previously been induced to buy all-electric homes by favorable rates. The court held that the subsidy "constituted undue preference and advantage" in violation of the State antidiscrimination laws.[46]

Several utility commissions have already authorized programs to finance the installation of insulation **to conserve natural gas.[47] Since it can be reasonably claimed that conservation by some consumers contributes to the eventual economic benefit of all, earlier precedent in support of promotional practices should be applicable. Some States**

---

42 Colorado Pub UtilComm'nDecision No 87640 (Oct 21, 1975), *Leroy Fantasies, Inc. v Swindler,* 4 4 App Div 2d 266, 354 N Y S 2d 182, 4 P U R 4th 334 (1974), *appeal denied, 34 N Y* 2d 519, 316 N E 2d 884 (1974)

43 88 N J Super 233, 236, 211 A 2d 806, 808, 60 P U R 3d 210, 212

44 From 1956 to 1970, the average cost of electricity in the United Statesdeclined from 261 cents per kWh to 210 cents While average rates declined, the costs of supplying electricity to certain types of loads and to customers during peak hours Increased rapidly Utilitiessubsidize some customers by overcharging others Since 1970, costs have Increased steadily; the average cost per kWhin 1975 was 3 21 cents, despite an equally steady risein consumption during the same period Samuelson, "Reform of Electric Utility Rates, " p 1475 See *a/so* Paul Joskow,''Inflation and Environmental Concern. Structural Change in the Process of Public UtilityPrice Regulation, " *Journal of Law and Economics 17(1 974): 291*

45 *Lefkowitz v. Public Serv. Comm'n,No 593(N. Y. Ct. App., Dec. 28, 1976), aff'g 377 N Y S* 2d *671, 50* App Div. 2d 338 (Sup. Ct. 1975).

46 377 N.Y S 2d at 674

47 E g , Re Pacific Power & Light Co , Case No U-1046-29, Order No 8567, 69 P U R 3d 367 (Idaho Pub UtilComm'n 1967), In the Matter of the Application of MichiganConsol Gas Co for Authorization of a Program for the Conservation of Natural Gas, 1 P U R 4th 229 (Mich Pub UtilComm'n 1973) Related decisions by public utility commissions have allowed the restriction of energy to approved uses and the prohibition of energy use by uses considered wasteful.

have adopted legislation specifically authorizing conservation programs, eliminating any doubt about their validity.[48]

If rate structures that encourage conservation are valid and mandated, subsidies for use of solar energy, which employ a nondepletable, nonpolluting energy source, should also be valid. Use of solar energy is supported by the same public interest and public policy as conservation–decreased use of fossil fuels.

State antidiscrimination statutes are not the only factor to consider in d incriminatory practices by utilities. The Federal antitrust laws may also outlaw rates or services that single out the owners of solar energy systems for special treatment. The longstanding antitrust exemption for State action will not totally immunize public utilities from antitrust liability.[49]

There are several grounds on which utility rate and service discrimination toward solar users could be deemed anticompetitive, and therefore a violation of antitrust laws. A utility may be deemed a monopoly if it charges a very high price or even refuses to provide backup service to solar customers. 50 An antitrust violation might also be found if a utility subsidizes its entrance into the solar heating and cooling market by distributing its losses across all utility customers, giving it an overwhelming advantage. [51]

The conference committee on the National Energy Act has, at this writing, taken steps toward resolving these rate issues, but failed to completely clarify the situation. While most of the President's proposals for dictating rate reform at the Federal level failed to gain conference approval, the conferees did allow the Federal Energy Regulatory Commission (FERC) to prescribe rules requiring electric utilities to offer to sell power to or to buy power from qualifying cogenerators or small power producers and prevent discrimination against such producers. (Small power producers in this case are facilities generating less than 80 megawatts from sol id waste or renewable resources; the definition of a qualifying generator is left to the FERC.) While this provision permits Federal regulation of the relationship between utilities and small solar generating facilities, it leaves the difficult problem of determining just rates up to the FERC.

ARE ONSITE SOLAR SYSTEMS SUBJECT TO REGULATION AS PUBLIC UTILITIES?

If an onsite solar system is found to be a public utility, it must file reports and accounts, 52 serve all customers who demand service within a given area, submit its rate schedules to the utility commission for approval,[53] continue providing service until given permission to discontinue,[54] provide safe and adequate service, 55 comply with

48 Cal Pub Util Code $325007, 2781-88 (West); N J Stat Ann §§ 482-4823 (West)

49 In *Cantor v Detroit Edison Co.*, 96 S Ct 3110 (1 976), the Supreme Court said that a privately owned publ ic utility is not exempt from possible antitrust liability when it furnishes its customers with light bulbs tree ot charge, even though the light bulb promotional practice had been approved (as part of the ut ility's rate structure) by the State public ut ility commission

50 *Refusals to deal area classic violation of section 2 of the Sherman A c?, 15 U. S C.* § 2 (Supp IV 1974) See, e g , *Otter Tail Power Co. v United States,* 410 U S 366 (1972), where a public utility was found to have violated section 2 of the Sherman Act by refusing to sell electricity to a municipally operated distribution system

51 Such conduct could be viewed as temporary price-cutting to put rival solar firms out of business. See *Puerto Rican American Tobacco Co. v American Tobacco Co., 30* F 2d 234 (2d Cir 1929) Or, it might be viewed as an illegal tying arrangement in situations where a solar customer's receipt of favorable treatment is conditioned on his acceptance of the utility service Tying arrangements are another classic antitrust violation See 15 U S C. § 14 (1 970), *International Business Machine Corp. v United States, 298* U S 131 (1936)

52 E g , Fla Stat Ann § 366 06(1) (West)

53 E g , Cal Pub Util Code 454 (West)

54 E g , Wis Stat Ann 19681 (West)

55 E g., Cal Pub Util Code 761 (West)

limitations on the issuance of securities, " and apply for certificates of public **convenience and necessity. State utility regulatory statutes universally require that every public utility obtain a certificate before beginning operation or even construction of its equipment. [57]**

Meeting these requirements would be a prohibitive burden for most potential owners of solar equipment, since the proceedings are frequently long and expensive, Even if a solar owner were willing to undertake the trouble and expense to file as a utility, he would have to recognize that an existing utility will be able to maintain a monopoly in its geographical area unless the courts determine that public convenience and necessity require otherwise

A new utility is therefore rarely permitted in an area already served by an existing utility. Even **where the existing utility** is providing **woefully inadequate and inefficient service, it wi I be permitted to exercise monopoly control over its service area if it promises to correct its shortcomings.**

The initial factor in determination of whether an onsite solar system is a public utility is who owns the system? Ownership can range from the privately owned solar system on a privately owned residence, *to* **cooperatively owned systems for a small community, to a corporate-owned collector field on corporately leased or publicly owned property to utility-owned systems on private residences. Clearly, somewhere in the continuum of owners the onsite solar facility and its owners became subject to regulation as a public utility.**

[56] E g , Fla Stat Ann 366 04 (West)

[57] E g , I III Rev Stat , ch 111 23, 56

[58] See, e g , *Kentuck y Util C o. v Public* Serv Comm n, 252 S W 2d 885 (Ky)

5 f g , F la Stat Ann § 36601, Mich Comp Laws Ann $460-6, Cal Pub Util Code §21 6(a)

[60] wn Stat Ann $19601 (West), Ill Rev Stat ch 111 2 3§ 10, e g , A *llen v California R R Comm 'n,* 179 Cal 68, 175 p 466(1918)

Ownership

Most State statutes define a public utility to include any person, corporation, partnership, association, or other legal entity and their various representatives.[59] A solar facility owned by a landlord, or a private property owner, as well as any partnership or corporate entity would qualify as a public utility, if the other qualifications are met,

Where there is no sale of electric power involved, but rather the owner and user are the same legal entity, State regulations govern. Federal regulations concern only the wholesale rate for interstate electricity sales, Rarely will owner-used energy be subject to Federal regulation as a public utility. This is true whether the owner is a single family, a joint venture composed of the various users, or a corporation which supplies its own corporate needs.

Where the owner is not the sole user, State statutes vary, The general rule is that a company which supplies energy "to the public" will be found to be a public utility, whereas a device which is not producin, energy for public use will escape utility regulat ions, [60] Law in this area is very unclear and the ambiguity may be a barrier to the introduction of solar equipment,

A facility can be judged to be dedicated to "public use" if its owners 1) demonstrate a willingness to serve all who request service;[61] 2) voluntarily submit to State regulation; or 3) attempt to exercise the power of eminent domain.[62]

[61] "The principal determinative charactistic of a public utility is that of service to, or read iness to serve an Indefinite public which has a legal right to demand and receive its services or corn mod ities "Motor *Cargo, Inc. v. Board of Township Trustees,* 52 Ohio Op 257, 258, 117 N E 2d 224, 226 (C P Summit County 19'52) See *generally* A J G Priest, "Some Bases of Public Utility Regulation, " *Mississippi Law Journal* 36 (1965) *18 See, e g, Peoples Gas Light & Coke Co v Ames, 359* I II 132, 134 N E 260 (19 35); *Story v Richardson,* 186 Cal 162, 198 p 1057 (1921)

[62] See Dow Chemical Co , et al , *Energy Industrial Center Study,* p 373 and cases cited therein

Even activities which do not clearly involve a dedication to public use may be declared by the courts to be "so affected with the public interest" that utility commission jurisdiction is justified. In one recent case, the owner of a shopping center was not allowed to sell energy to stores in the shopping center without being regulated as a utility.[63]

Electricity, Steam, or Heat?

Another factor in determining whether an onsite solar use is subject to regulation as a public utility is the form in which energy is supplied to the users —electricity, thermal energy (steam or hot water), or chemical energy. Solar equipment may become available which will produce energy in each of these forms. Again, State statutes vary, For example, some States do not vest jurisdiction over production and sale of steam in their utility commission.[64] State statutes vary greatly, however, and generally thermal energy is not regulated simply because there is no explicit mention of the issue in the statutes,

Still another aspect of this question is whether the sale of energy by an onsite producer subjects the owner of the onsite equipment to regulation. Sale to a presently regulated utility should be interpreted as would sale to any other category of user. Under most State statutes, sale of excess steam or electricity to a specified public utility probably would not meet the test of dedication to public use which is required in determination of public utility status. In a number of cases, industries that generate excess electricity or steam or sell it to public utility companies have been held not to be public utilities.[65] However, in some States the opposite has resulted.

The congressional revision of the National Energy Act takes some action in exempting onsite owners from regulation, but leaves many issues unresolved. The conference agreed to exempt cogenerators and small powerplants producing up to 30 megawatts of electric power from State utility regulations (apparently granting the FERC the authority to overrule States in these issues) and exempts biomass generators smaller than 80 megawatts from the Public Utilities Holding Act. The act would, however, apparently not permit exemptions for subsidiaries of utilities since small generators qualifying for the exemption must be owned by organizations whose primary business is not energy generation,

CAN A UTILITY OWN AN ONSITE SOLAR FACILITY?

The above discussion has assumed that the owner of the onsite solar system was also the owner of the land and building upon which the solar system is located. Is it permissible for utilities or other corporations to own onsite solar facilities on land which the utility does not own, such as the property of the user?

The short answer to this question seems to be yes, although antitrust laws and State policies designed to promote competition would probably prevent utilities from establishing exclusive marketing rights for solar equipment. Utilities probably would be required under existing law to compete with other distributors of solar systems.

The law is clear that utilities at least would not be barred from the solar equipment market. A recent analysis of the question of permitting gas utilities to invest in onsite conservation equipment concluded that Federal antitrust statutes would not be violated if the utility only purchased conservation devices (in this case, insulation material) from independent suppliers and did not actually manufacture or install a major share.[66]

---

[63] *Cottonwood Mall Shopping Center, inc. v* Utah *Power & Light Co.,* 440 F 2d 36 (10th Cir 1971).

[64] Mich Comp Laws Ann $460501, Fla Stat Ann. § 36602

[65] *See* **Dow** Chemical Co , et al., op. cit., pp. 374-376, and cases cited therein

[66] William G Rosenberg, "Conservation Investments by Gas Utilities as Gas Supply Option, " *Public Utilities Fortnight/y,* Jan 20, 1977, pp 19-20

Exemption from Federal antitrust statutes is apparently permitted in some cases where an expansion of utility operations is undertaken at the suggestion of a State utility commission and not on a utility's initiative. [67] Precedents exist permitting utilities both to expand their business to include activities under regulatory authority and to own subsidiaries which are not regulated.

There have been cases where, at a utility's request, an unregulated industry was placed u rider regulatory control. The Pacific Telephone Co., in California, for example, owned an unregulated subsidiary for a number of years which installed and operated mobile radio telephones. The company subsequently asked the California Public Utility Commission (PUC) to place this activity under regulatory control. The PUC accepted the application, but a private competitor appealed the decision. The California Supreme Court upheld the PUC approval, in a divided decision. The court found that mobile telephone service was closely related to the utility's regulated business and that the equipment, used for telephone communication, fell under the jurisdiction of the regulatory authority. 68

At the same time, there are cases where utilities have not been able to place subsidiaries of this type under PUC regulation. For example, the New York Service Commission limited the activites of utilities in solid waste disposal ventures,[69] and AT&T was prohibited from expanding its unregulated business as a part of a settlement.'"

It is unclear whether an existing public utility will be permitted to own a solar system which is permanently placed on the roof or other property of a customer. Since such a system is probably a fixture, the utility would be required to leave the solar system in the home or office, even if the property is sold or leased. The most practical approach is for the utility to finance the purchase of the solar equipment and thus perm it its easy disposition as a fixture, but retain the usual metering, repair, and maintenance relationships with the customer.

Nonutility corporations could also own onsite solar equipment. Probably, such a corporation would supply only equipment, and perhaps maintenance, but not energy. Under most State statutes, provision of energy equipment is not subject to utility commission jurisdiction.

The specific arrangement between the solar equipment leasing company or seller and the property owner may alter the question of utility regulation. For example, the inclusion of a service agreement between the lessor and the lessee might increase the likelihood of regulation, as would more widespread adoption of solar devices. Additionally, to the extent that such an agreement requires backup power from public utilities, the contracts and prices for these provisions would be indirectly subject to regulation as part of the normal utility rate regulation.

Congress apparently has taken a dim view of utility ownership and financing, since the committee of conference on the National Energy Act rejected the President's proposal that utilities be permitted to finance the installation of insulation and other expensive residential conservation equipment. While the conference encourages utilities to perform energy audits of residences, it prohibits utilities from installing conservation devices other than furnace-efficiency modification, clock thermostats, and load-management equipment. Loans to cover these devices are limited to $300. (State commissions are per-

---

[67] *Cantor* v *Detroit Edison* Co., 96 Sup Ct 3110 (1 976)

[68] *Commercial Communication, Inc* v California *Public Utility Commission,* 50 Cal 2d 512 (1958)

[69] P M Meier and T H McCoy, *Solid Waste* as *an Energy Source* for *the* Northeast, prepared for the Energy Research and Development Administration (Upton, N Y Brook haven National Laboratory, No 50550, 1976], p 96

[70] *United States* v *Western Electric* and AT&T, 13 Rad Reg (P-H) §2143, 1956 Trade Reg Rep (CCH) 571,13-4 (D N J 1956) (consent judgment)

mitted to ask for an exemption from this prohibit i on.)

The field remains quite ambiguous, however, and many possibilities remain open. It may be attractive, for example, for utilities to operate solar equipment as a part of an unregulated subsidiary. Such an arrangement would eliminate concerns, expressed by some potential owners of cogeneration equipment, that equipment on their premises, owned by a regulated utility, would not be able to sell energy on an equitable basis because of special pressure to adjust utility rates.

Municipal Utilities

Since municipal utilities can finance plants with relatively low-interest, tax-free bonds, the capital costs associated with plants owned by municipal can be lower than those of plants owned by privately owned utilities. Lowering capital costs is particularly important in the case of solar energy systems where the bulk of the energy cost results from the cost of capital. In most States, however, municipal utilities are prohibited from expending funds for "private benefit" and this has been interpreted to mean that municipal utilities cannot purchase shares in generating facilities which are partly financed and operated by a private utility.

These prohibitions may also prevent municipal from owning or operating onsite generating systems. In the case of solar devices, however, it would seem that the municipal could make a strong case that installation of a solar device would benefit the public at large even though it was primarily designed to meet the energy needs of a single building. In fact, several municipal utilities have experimented with onsite solar energy equipment in their districts. The legal point may be moot since, as one analyst put it, "Who's going to complain?"

In any event, the laws preventing municipal from owning part shares in generating facilities which will be partly owned and operated by private utilities are being changed in many areas of the country to allow municipal to share the cost of constructing nuclear-generating facilities and other centralized energy equipment, which, like solar energy systems, have high capital costs. Prohibitions aganist such "joint action" programs are often written into State constitutions. The constitution of the State of North Carolina, for example, was recently amended by referendum to permit joint-action financing of new electric utility plants, Such amendments have been controversial in some areas. For example, in 1977, the Governor of Indiana vetoed legislation amending that State's constitution to allow joint action programs.

Cost-Sharing Issues

If a utility were to own or operate onsite generating facilities, contracts between customers and the utility would have to address several important issues. They include:

- Who would pay the property tax on the equipment? (This is particularly important because utility tax rates often are several times higher than those for homeowners.)
- How would costs of insurance be distributed? Would utilities be liable for damage to onsite equipment caused by the homeowner?
- Would a contract for onsite solar equipment be binding on a new owner if title to a building were transferred?
- How far would a utility's maintenance responsibility extend? Would a utility, for example, be responsible for keeping a roof on which a solar collector was mounted in weatherproof condition?
- Should a utility pay a customer for the use of a roof or wall for installing a solar collector? If so, would the fee decrease for the use of walls and roofs that did not permit optimum collection of radiation?
- Could a customer demand that a utility remove onsite equipment? If so, who would pay for removal?

None of these questions pose insoluble problems, but all may require careful negotiation. All of the utilities interviewed by the General Electric Co. said they preferred onsite facilities on large buildings, because questions would be easier to resolve than if large numbers of small buildings were involved. [71]

WHAT RIGHTS WILL UTILITIES HAVE TO AQUIFERS AND OTHER GEOLOGICAL FORMATIONS USED FOR THERMAL STORAGE?

Several techniques for storing large amounts of thermal energy in ground water and in heated underground caverns have been proposed (see chapter XI), and the use of subsurface regions for such purposes may raise a number of difficult legal questions. For example:

- Would a utility need to purchase mineral rights to use subsurface water or rock for thermal storage?
- What aspects of water laws govern which aquifers can be used, the contamination permitted, the heating of aquifers which might be used for potable water, etc. ?
- Would the owner of heated water have protection from someone tapping this hot water supply?
- What environmental laws would apply to large-scale thermal storage?

71 General E lectric Corp , *Conceptual Design and Systems Analysis* of *Photovoltaic* Power Systems, April 1977, ERDA contract E(11-1) 2744, op cit

Chapter VII

THE IMPACT OF SOLAR ENERGY ON U.S. FOREIGN POLICY, LABOR, AND ENVIRONMENTAL QUALITY



Chapter VII- THE IMPACT OF SOLAR ENERGY ON U.S. FOREIGN POLICY, LABOR, AND ENVIRONMENTAL QUALITY

Page

Background ... *.. **. **. . ... .* s.*.... 199
Developing Nations. 202
Implications for U.S. Policy 203
Foreign Trade in Solar Technologies 208
Background 208
Foreign Competition in Solar Technologies. 209
The lmpact of SolarEnergy on American Labor... 210
ManpowerRequirements. 210
SomeQualitativeImpacts 213
Long-TermImpacts. 218
Net Energy Use of SolarEquipment ... .219
Primary Energy Requirements 219
Energy UsePerDollarofGNP 220
TheImpact of On$iteEnergy on the Environment 222
Direct Environmental Effects. 222
OnsiteSolarEnergySystems and Land Use. 225
TheAdverse Environmental Effects of CollectorFields. 231
Land Used by Conventional Generating Systems 231
Impact on BulldingDeslgns. 232
Background 232
Roof Pitch and Orientation. 236
Space for Storage 237
Other Building Impacts. 241

LIST OF TABLES

TableNo. Page

l. Electricity Prices in Developing Nations ..205
2. Labor Requirements for a Conventional 800 MW_e Coal Plant... 211
3. LaborRequirements of TwoTypes of DistributedSolarEnergySystems. 212
4. Skills Required for Constructing a Coal-Fired Electric Generating PlantandOperating the System Over a 30-Year Period ...215
5. Detailed Breakdown of Skills Required for Conventional ElectricSystem 216
6. Energy PaybackRelations for Onsite SolarConversionSystems in Albuquerque 220
7. MaterialsRequired in Solar Energy Devices(kg/m^2) 221
8. Primary EnergyRequired to Produce ComponentMaterials for Solarand Conventional PowerSystems 221
9. EmissionsAssociatedWith the Energy Requirements of a Single Family House in Omaha, Nebr.. 224
10. Primary EmissionsAssociated With Energy ResourcesAvailable for Residential Commercial and Industrial Consumers 226
11 "PaybackTime" for the Emissions AssociatedWith the Manufacture of Solar EnergySystems. 226
12 Land Required for Strip-Mining Coal. ... .231
13 PotentialAreasfor Collectors on Typical Buildings 235
14 Thermal and Electric Outputs of Flat-PlateCollectors in Omaha, Nebr, as a Function of Tilt Angles and Orientation 240

LIST OF FIGURES

Figure No. Page

I. Worid EnergySupply and Demand 200
2. WorldwideAvailability of Sunliaht Resources 2O4
3 A Small Housing Development Using Solar-Heating Devices 228
4 Tracking Collectors Mounted Over a Parking Lot 229
5 VegetationGrowing UnderArrays of SolarCollectors. 230
6. Techniques for lntegrating Solar Collectors Into Conventional Designs for Single Family Residences 233
7. Techniques for lntegrating Solar Collectors Into Conventional Designs for Townhouses and LowRiseApartments ...234
8. Presidential BuildingWith Optimized SolarRoof Pitch and Orientation. 236
9. A Commercial Building Designed To Optimize Roof Pitch and Orientation 237
10. A Proposed installation for a One-AxisTracking Collector 238
11. Use of Collectorson the Vertical Wall of a High Rise Hotel 239

Chapter VII
The Impact of Solar Energy on U.S. Foreign Policy, Labor, and Environmental Quality

BACKGROUND

Extensive use of solar energy throughout the world would relieve some of the international stress which results from competition over diminishing energy resources. Solar energy is one of the few energy resources reliably available throughout the world and, to the extent that it can be developed in lieu of conventional energy sources, it can reduce the uncertainties and trade imbalances which have resulted from energy imports.

Moreover, solar energy technology can be implemented without the technical infrastructure and cadres of skilled engineers required to implement most other energy strategies— in developing countries solar energy may provide a technique for converting low-cost labor into low-cost energy. While it is difficult to anticipate how fast solar energy will be introduced into the world energy market, it appears that solar energy's impact is likely to be quite small in the next few decades unless accelerated programs for developing this industry are undertaken.

It is likely that solar energy will grow more rapidly abroad than it does in the United States, since U.S. energy prices are relatively low, U.S. domestic energy supplies are relatively large, and U.S. labor costs are relatively high. However, U.S. policy in solar energy will probably play a critical role in influencing the development of this technology throughout the world: the United States now probably leads the world in the quality of its solar engineering. The United States can influence utilization of solar energy in developing countries through its economic assistance programs and a major U.S. commitment to the use of solar energy for its own use would give a prestige to the field which may attract worldwide emulation. The history of the past two decades clearly indicates that these three effects resulted in a rapid transfer abroad of U.S. interest i n fission reactors.

The eventual need to develop renewable sources of energy is beyond serious contention, although there is disagreement about the urgency involved. There are two parts of the problem: near-term depletion of low-cost oil and gas reserves, and the depletion of all fossil and uranium resources over the long term.

Many recent studies have indicated that world demand for oil and gas may exceed supplies by the middle of the 1980's, [2] In the past two decades most of the developed nations of the world and the industrialized sections of developing nations have become heavily dependent on the convenience and low cost of petroleum and natural gas, and consumption rates have become astronomical.

A shortage of indigenous supplies of these fuels has required many nations to import them and in many cases, dependence on these imports is heavy. This dependence *is* likely to increase during the next decade because of the shortage of acceptable alternatives, and the high costs and long construction times needed to convert to the alternatives which become available. The uncertainties associated with importing a

[1] *The International Energy Situation: Outlook to 1985*, Central Intelligence Agency, Report No. ER-77-10240V, April 1977.

[2] Carrol Wilson, Project Director, *Workshop on Alternative Energy Strategies*, the MIT Press, Cambridge, Mass., 1977.

large fraction of a critical material are amplified by the fact that world resources of petroleum are inequitably distributed. The OPEC cartel, for example, controls 68 percent of known world reserves of o i 1, and its Middle Eastern members alone control 55 percent of known reserves.

Coal and other fuels can be substituted for oil and gas even though the use of these energy sources is not as convenient as liquid fuels. The use of coal resources may be limited by environmental problems, transportation costs, and other difficulties. Figure VI l-l indicates that if world energy consumption grows at its current rate, proven world **reserves will** be **entirely consum-**ed by 2015, If the entire world consumed energy at U.S. consumption rates, world reserves would be depleted by the end of this century, It is, of course, unlikely that production or consumption rates will continue to grow exponentially and new energy sources, such as fusion, may be available to

[1] *Oil and Gas Journal,* Dec 29, 1975

Figure VI l-1 .—World Energy Supply and Demand

Measured World Recoverable Energy Reserves, 1974
I Quadrillion Btu]

Area	Solid fuels	Crude oil	Natural gas	Oil shale and tar sands	Uranium (nonbreeder) [2]	Total
Africa	361.7	526.6	201.7	81.4	1981	1,369.5
Asia (less U. S. S. R.)	2.608.7	2,202.4	432.6	8702	3.1	6,1260
Europe (less U S S. R.)	2,581,5	57.1	153.6	117.0	46.4	2,955,6
U.S.S.R.	3,325.5	333.6	577.9	139.0	Unknown	4,376.0
North America	5,070.9	301.0	380.6	9,111.0	422.7	15,286,2
South America	49.8	311.5	60.6	23.7	11,9	4575
Oceania	459,8	9.4	24.9	9.2	99.1	602.4
Total	14.457.9	3,741.2	1,831.9	**10,3515**	781.3	'31 ,1732

[1] According to the U S Department of the Interior Bureau of Mines North American tar sands and shale 011 reserves may be severely overstate: Development of most of these reserves is not economic at present
[2] Energy content using breeders 60-100 times as great Thorium resources neglected
SOURCE World Energy Conference *Survey of Energy Resources New* York 1974

World Energy Consumption, Production, and Inventory Changes

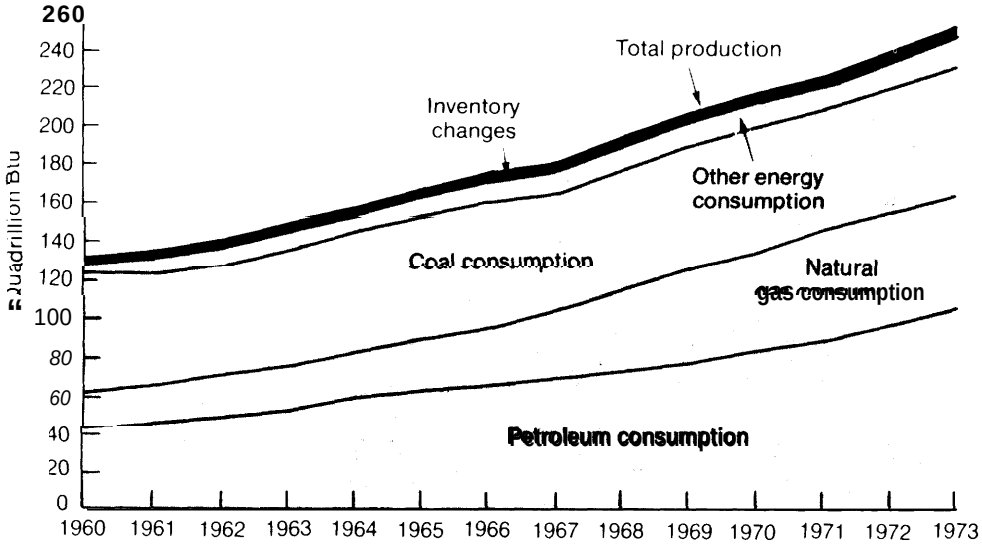

SOURCE Energy Perspectives 2 U S Department of the Interior, June 1976 pp 11 and 20

provide essentially inexhaustible supplies of energy in the next **20** years, but it is difficult to take great comfort from the available statistics.

World supplies of fuels other than oil and gas are also inequitably distributed Figure VI I--i indicates that nearly half of known world energy resources are located In North America (although the share would be reduced somewhat If oil shale assets are overstated) The United States, U S S R , and Eastern Europe control 73 percent of the known world reserves of coal [4].

There can be little doubt that growing uncertainties about energy supplies will have an Important Impact on international political stability during the next decade intensive efforts will be made to develop domestic resources and to ensure the security and reliabllity of foreign supplies The latter objective, however, would appear to be Increasingly difficult to achieve The effort to assure supplies and the vast transfers of assets between nations which occur in the process, can create economic dislocatlons in developed nations and frustrate the aspirations of less developed nations This, In turn, could lead to restructuring of world alliances There has been speculation, for example, that democratic institutions (in nations such as Italy) may collapse under the weight of accelerating Inflation and recession traceable, at least in part, to energy costs Dr Henry Kissinger has warned that:

> Not since the 1930's has the economic system of the world faced such a test. The disruptions of the 011 price rises, the threat of global Inflatlon, the cycle of contraction of exports and protectionist restrictions, the massive shift In the world's financial flows and the likely concentration of invested surplus 011 revenue In a few countries, al I threaten to smother the once-proud dreams of universal progress with stagnation and despair

The sense of insecurity attached to importing energy resources is magnified by the fact that in most cases supply lines for energy are very long and thus potentially very vulnerable No nation can be comfortable if a commodity on which Its economy depends comes from so uncertain a source Moreover, in any situation where a state or a group of states greatly dependent on Imports can assemble a substantial military capability, a disruption, or threatened disruption, of those supplies carries with It a high risk of International violence It is noteworthy that the U S response to the embargo of 1973-74 included thinly veiled threats of military action

Another potential source of energy-related conflict concerns nuclear proliferation The global spread of civilian nuclear energy has been accompanied by a decline in the number of technological, economic, and time barriers to acquiring nuclear weapons An increasing number of countries are already capable of producing their own nuclear arms The consequences of proliferation are subject to debate, but they are unlikely to be positive from the perspective of U S or global interests. A strong argument can be made that proliferation will jeopardize regional and global stability, increase the likelihood of nuclear war, exacerbate the threat of nuclear-armed, nonstate terrorism, and greatly complicate U S. relations with new (potential or actual) nuclear weapons states. Because securlty concerns are a key incentive to acquiring nuclear weapons, the probability of prolIferation will tend to be greatest in regions with the highest potential for international conflict

In the past, the United States placed major emphasis on aiding nuclear energy development programs around the world In recent years, this program has been tempered by **a** concern about proliferation, resulting in efforts to tighten export agreements, to prohibit the export of facilities for reprocessing plutonium or enriching uranium, and to discourage foreign transfers of such technology.

The United States, however, is in a weak position if it attempts to discourage the development of nuclear power in nations

[4] Wilson, p 171

where attractive alternatives are not ava i l able.

DEVELOPING NATIONS

Less developed nations are likely to be most vulnerable to energy shortages and a steep increase in energy prices. They will be less able to compete for scarce resources and less able to bear the additional financial burdens. (It could be argued that less developed nations will fare better than developed nations, since the less developed a nation is, the easier it will be to return to noncommercial fuels such as dung and wood) Plans for developing an indigenous industrial base and modernizing agricultural methods have already been disrupted by higher energy prices. Many irrigation systems in South Asia, for example, stand idle because the fuels to operate them cannot be obtained.

The economic assistance programs of the developed nations are partly responsible for the dilemma. These programs have in many cases attempted to promote the development of an industrial infrastructure which is as heavily dependent on scarce energy resources as U.S. industries.

The relatively small onsite solar technologies examined in this report should be particularly attractive to developing nations for a variety of reasons:

- These nations typically have not invested in an extensive network of transmission and distribution facilities (equipment which frequently costs as much as the generating stat ions themselves); onsite technologies could provide power to dispersed sites without the expense and delay associated with building such equipment.

- Onsite equipment does not require an enormous investment of capital in a single project, thereby reducing the overall risk of the investment and avoiding expensive capita l-carrying charges during construction.

- The equipment can be built rapidly and produce power within weeks or months, instead of requiring years.

- Major banks are likely to be interested in loans to developing countries for capital equipment which does not commit the borrowing nation to large operating expenses. Solar devices fall easily into this category, while generating equipment based on fossil fuels does not.

- Generating capacity could be expanded flexibly and proportionately to meet growing requirements for energy. Large facilities produce sudden large increments in capacity which are difficult to manage This problem frequently results in prolonged periods of expensive overcapacity

Some of these advantages would be reduced or eliminated if it were necessary to construct a centralized utiilty large enough to meet all energy requirements of the area under the assumption that solar equipment might supply no energy during some period of peak demands There are a number of ways of eliminating the need for centralized backup power in developing countries:

- The facilities requiring energy could s i m ply be shut down when energy was not available — this would reduce labor productivity but would not be as significant in a location where labor was relatively inexpensive

- Many solar applications, such as water pump i n g, will need no backup in remote areas since storage is very inexpensive

- Small emergency generating equipment could be maintained to provide backup power when solar energy fails. Energy from diesel generators is commonly used in remote villages and is very expensive, but the costs would be more manageable if the devices were only operated a few days each year

Solar energy should also be attractive to the less developed countries on grounds of broad social utilitv

- As a relatively labor-intensive means of power generation (both in terms of manufacture of components and installation), solar energy should help alleviate the endemic high unemployment and underemployment that plague most developing countrles
- Village siting of solar facilities would help raise rural living standards This could, in turn, have the effect of reducing the rate of migration to urban areas in search of employment which is often available only in urban areas because only urban areas have adequate supplies of energy
- Solar energy facilities can be constructed utilizing a variety of materials, many of which may be locally available.
- Developing solar energy would not commit those countries to forms of energy production that they may not be able to sustain because of fuel shortages or the lack of secure funds for operating costs

Solar energy may well become economically attractive in developing nations In many applicat[ons significantly before it does so in the United States for a number of reasons Most developing nations are located in areas where sunlight is plentiful (see figure VII-Z); labor costs–which frequently represent a substantial fraction of the total costs of a solar energy installation — are relatively low; and the cost of competing energy — when it is available— is frequently very high. Table VI I-1 summ a r izes the prices charged ror ectricity in many nations around the world. The information is difficult to Interpret since many governments subsidize the selling price (For reference, the fuel prices alone contribute over 3¢/kWh to the cost of electricity If petroleum is Imported at world 011 prices) The table does show, however, that energy prices in many parts of the world are several times higher than they are in the United States.

Economic comparisons are of no relevance in areas where commercial energy is not available because of long lines of communication, the lack of trained maintenance personnel, or other factors. A recent survey estimated that about 500 million people in the world live in villages without any electric power.[5] About 45,000 American Indians in the American Southwest live in villages without electricity.[6]

The major barrier to all energy sources in these areas, of course, is the shortage of capital resources. Although operating costs are low, solar energy equipment requires a substantial initial investment which most small developing nations will find difficult to raise. Any major program for developing the solar resource in these areas will probably require external financial and technical assistance. As noted above, it may be easier to obtain financing for many small, relatively low-risk and low-operating cost solar projects than for larger, conventional energy systems.

IMPLICATIONS FOR U.S. POLICY

The preceding discussion should make it clear that energy-related issues can present major problems for foreign policy during the next few decades. Formulation of a coherent strategy for foreign policy cannot be made without assessing the potential effects of different plans for meeting U.S. domestic energy requirements, as well as plans for assisting other countries in developing new energy sources. Conversely, it is important that the foreign policy implications of energy policy enter the analysis of energy policy. Indeed, this is necessary simply in the interests of national security, since our security would clearly be eroded if energy-

[5] *Photovoltaic Village Power Applications*, NASA-Lewis Research Center, June 30, 1977, p. 9.

[6] *Photovoltaic Refrigeration Applications*, NASA-Lewis Research Center, June 1, 1977, p. 28.

Figure VII-2– Worldwide Availability of Sunlight Resources

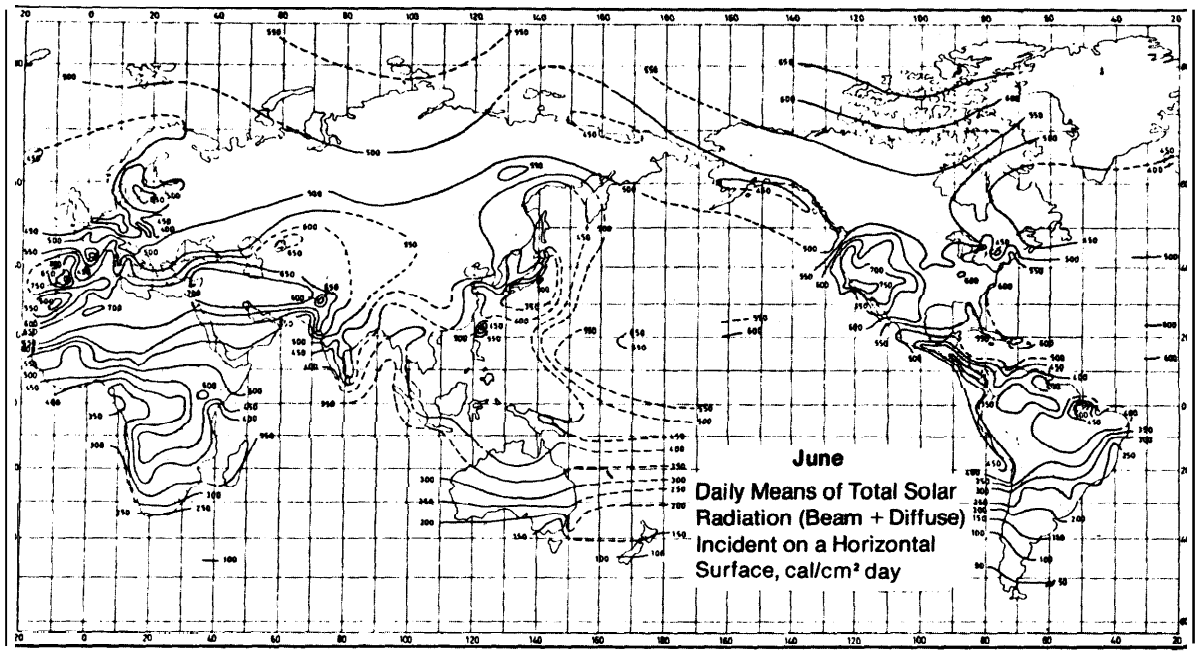

Daily Radiation for June

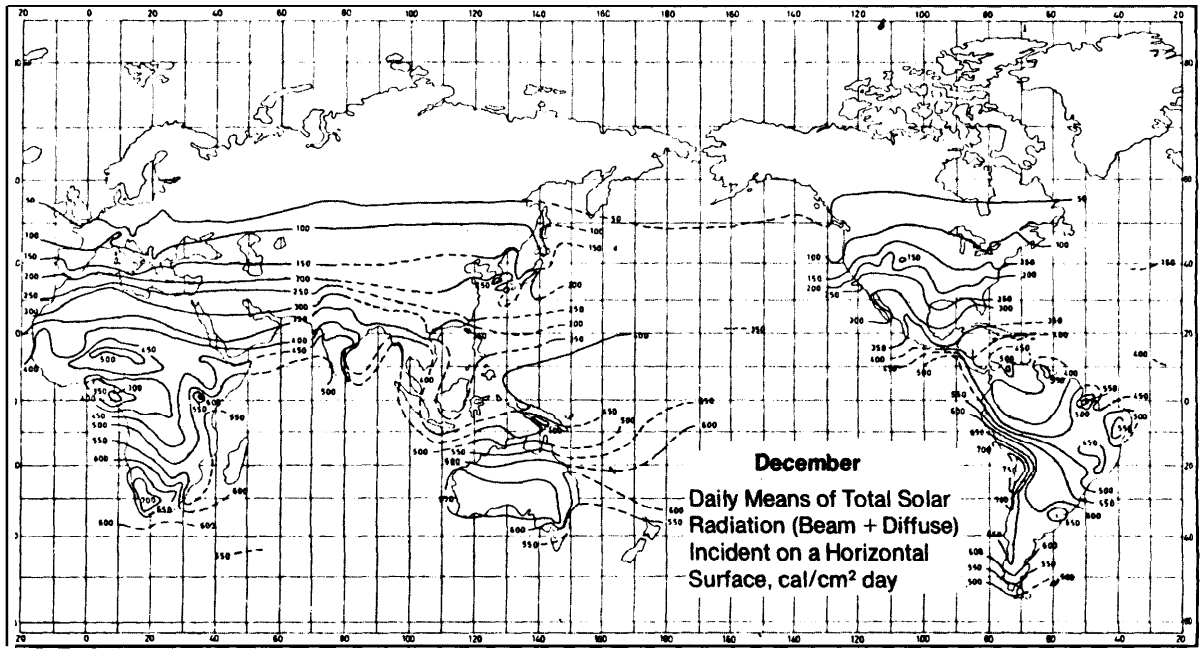

Daily Radiation for December

SOURCE John A Duffie and William A Beckman, *Solar Energy Thermal Processes,* John Wiley& Sons, New York, 1974, pp 35,37

Table VII-I . —Electricity Prices in Developing Nations

Electricity prices
(cents / k Whr)

Country	Capital city			Urban, noncapital	Remote	Comments
	Residence	Commerce	Industry			
Bureau: Asia						
Philippines .	1.6-4.7	2.2-4.7	2.8-3.2		3.8-16	Remote: Regional national grid, 3.8; Private small COOPS, 16
Pakistan . . .	2.2-2.5		2.2-4.2		.4-1.5	
Indonesia	7	10			.5	
Sri Lanka.	4-2					
Nepal	2-4					
Bangladesh.	1.1-1,9					Subsidized
India.	2.8					
Afghanistan	1.7-6.6					Different rates for Hydro, Diesel, Gas
Korea	4.6-11	5.6-7	3-4			
Thailand* . . .	.70-5					•BAHT/kWhr
Bureau: Near East						
Yemen	13.3					
Israel . . .	4.3		**4.6-6.6**			
Egypt	1.4-2.4			1-2.4	1.0	Subsidized (e. g., fuel 011 supplied at 1 /6 world price)
Syria	**5**					
Morocco . . .	5.5-13		**12.5**			
Portugal	3	4	**4**			
Sudan	8.6					
Bureau: Latin America						
Ecuador, ...	1.5-3.8					
Haiti	5.5-7.3				25/month for 25 watt bulb	
Colombia . . .	1-1.2			1-2.5	3-4	
Costa Rica .	4.4-5.3		4.7-6		4.4-4.7	
Guatemala .	4.4-6.4			3.2-7		Generation (58% thermal) 3.74, plan two hydro to reduce to 2.2 Local study shows small systems are not cost effective
Peru	1.9				1.9-3	
Guyana	19-21.9	**29.9**	27			Bauxite manufacturer gets subsidized rate of 10

Table VII-1.—continued

Electricity prices
(cents/kWhr)

Country	Capital city			Urban, noncapital	Remote	Comments
	Residence	Commerce	Industry			
Dem. Rep. •.	2-6					● in RD ($RD?)
Brazil	5.6			6.9	3.7	plus 23% Fed. Tax
Nicaragua . . .	.87-11.3					should low residence be 8.7?
Panama	6-10					uniform in country
Uruguay.	4-5	2-3	2-3			uniform in country
Paraguay	5-8		6-8		6-8	
Chile*	.68-1			1.4		CH $
Bureau: Africa						
Benin	13	13	**13**	13		
Burundi	5	5	**5**	5		Two cities: one hydro, one (smaller) diesel. Plans for small hydro for 3 towns (GEIL)
Nigeria.	3-6	3-6	3-6	*4-7*		
Cameroon . . .	19	19	—	*23*		
Tanzania . . .	3-13	12-27	7-1o			Heavy Industry, 1-3
Liberia	6.5-8	6.5-8	5.5-7			Complicated billing
Niger	10-19	10-19				Average for Mission Residences, 12.5
Senegal	7-24	11-25		7-14		
Chad	14-26	14-26				Average for Embassy housing, 2
Kenya ., ...	2.8	11.2 -15.8	6-14.2			
Sierra Leone .	9	9	9			
Upper Volta.	16-26			16-26	8*	
Mauritania. . .	17					
Ethiopia.	5-7.5	5-7.5	5-1o	10-12		

SOURCE Agency for International Development response to telegram requests for Information Summer 1977

related tensions lead to conflict (even if we were not directly involved in the conflict), and it has already been eroded by our growing reliance on fragile supply routes for energy supplies critical to our economy.

Short of open warfare, competition over energy supplies could place a serious stress on traditional U.S. alliances and disrupt its attempts to improve relations with the Third World.

As the world's largest consumer and importer of energy and the acknowledged leader in most energy technologies, the United States will necessarily be the focus of international tensions generated by energy issues. Washington's relations with

other industrialized countries (many of them U.S. allies) have already been strained by efforts to impose controls on nuclear exports and by a competitive scramble, following the 1973-74 embargo, to obtain reliable sources of oil imports. With the emergence of the United States as a major importer, petroleum has become a potentially serious source of division within the Atlantic Alliance, and with Japan. By contrast, Soviet capabilities to export oil and uranium have augmented the U.S.S.R.'s hold over its clients in Eastern Europe.

Its wealth and power have long made America the representative and symbol of the industrialized state in the eyes of less developed countries. Thus, inevitably, the Unitd States has been the focus of Third World resentment, a condition exacerbated by the scale of U.S. energy consumption in an increasingly shortage-conscious world and by recent American efforts to constrain nuclear exports.

A danger exists that energy problems may serve to reinflame some of the anxieties and ambitions which formerly dominated relations between the Communist and non-Communist nations. For example, there has been fear that the U.S.S.R. may successfully exploit the Arab-Israeli dispute to obtain influence over the disposition of Middle Eastern oil, upon which most of the industrialized countries of the world are so dependent. Rising energy costs, in conjunction with population, food, and resource pressures, may also frustrate the development hopes of many Third World countries, thereby strengthening the hand of Communist movements in those countries and consequently placing new strains on U. S.-Chinese relations,

Problems have also been created by the current administration's attempts to control the proliferation of nuclear weapons technology by discouraging non-nuclear weapons states from acquiring advanced nuclear energy equipment such as uranium enrichment and reprocessing systems. Efforts in this area have been rebuffed for a number of reasons, but two problems clearly are large factors:

- The failure of the United States to be able to offer any logical alternatives to the proposed nuclear development programs, and
- The implication that advanced nuclear systems are reserved for advanced nations, particularly those with nuclear weapons capabilities, while other nations are relegated to "second-choice" energy alternatives not seriously considered by the United States for its own use.

It is clear that accelerated development of solar energy and other renewable energy resources throughout the world will not be able to play a large role in the difficulties discussed here in the near future. But the development of a reliable energy source, applicable in a variety of countries, operating largely independence of foreign supplies of resources or technology, would certainly move things in the right direction.

Solar energy offers a particularly promising avenue for improving U.S. relations with the Third World — an area in which Washington has not been notably successful in recent years— because it is peculiarly adaptable to the needs of the developing countries. Solar energy is particularly attractive in this regard because it offers a means of directly contributing to improved well-being at the village level. Americans have not been adept at providing technology suited to the rural conditions, low-skill levels, and plentiful labor supplies which characterize the living conditions of much of the world's population.

Development of a set of solar energy systems which were genuinely useful to the Third World would provide an opportunity for the United States to demonstrate its concern for the aspirations of developing nations and to reinforce its global reputation for technological leadership and innovation.

The United States is in a position to assume leadership in the development of

solar **energy resources** for a variety of reasons.

In the first place, the United States leads the world in solar energy technologies. The U.S. Federal budget in solar energy is probably larger than the combined solar budgets of the rest of the world. Soviet efforts in solar energy are virtually nonexistent.

Secondly, the United States is in a position to supply capital to developing nations either directly or through international lending institutions such as the World Bank or the Export-Import Bank.

Finally, a major U.S. commitment to the development of solar energy resources both for its own use and in its economic assistance policy, would have a subtle but powerful effect on the attitudes of other nations toward this technology.

FOREIGN TRADE IN SOLAR TECHNOLOGIES

BACKGROUND

If solar energy can, in fact, provide a competitive source of energy in many parts of the world, the potential for U.S. exporters should be substantial. There have not been any systematic surveys undertaken of the extent of this market, either by the U.S. Government or by U.S. solar industries. Some observers are convinced that there is a potential market of many hundreds of million dollars in annual sales to underdeveloped nations alone, and see no reason why the United States cannot capture a large fraction of that market.

Other analysts are more conservative. They note the limited capability of poor countries to finance imports, and the fact that much solar energy hardware is so simple as to be unprotectable by patent. Moreover, low labor costs in developing countries and the expense of transporting bulky solar equipment suggest that many less developed countries will find solar energy an ideal import-substitution Industry. I t is not difficult to imagine a nation like Singapore, which has quickly mastered a variety of medium-level technologies, developing the capabilities to fabricate some solar equipment. If this assessment is correct, the U.S. export market may be limited to relatively high technology solar components, e.g., solar cells, electrical controls, and heat engines.

More detail is available on photovoltaics than in other areas of solar technology. About 113 kW of photovoltaic devices were sold in non-Communist nations outside the United States in 1976 (a market of approximately $2 million) and a recent study has forecast that sales could reach about 88 MW ($44 million) by 1986.[7] This is still much too small to attract major industrial interest.

These projections will remain speculative until an overseas solar marketing survey is conducted to look at the energy needs of developing countries, the kinds of specialized solar technology that would be required to meet those needs, and the capability of the developing countries to pay for imports or to manufacture their own equipment, This information would be analyzed in the context of existing U.S. technology, and would indicate both how extensive the market for off-the-shelf solar hardware is, and how existing technology could be adapted to provide the specialized equipment needed by other countries.

The development of a foreign market would also substantially benefit the domestic solar energy equipment market, since the additional overseas demand for

[7] *Characterization of the Present Worldwide Photovoltaics Power Systems Market,* the BDM and Solarex Corporations (Draft report, May 1977).

solar facilities would result in larger production runs and more research, This should reduce domestic prices and accelerate improvements made in devices sold in the United States, yielding the United States a long-term advantage, even if developing nations began to produce their own systems in a decade or so It is likely that foreign manufacturers would sometimes require U.S. assistance, for example, utilize U.S., patents or licenses for solar devices,

Estimates of a large potential foreign market for solar energy are supported by recent studies conducted by the Department of State. One study, published in November 1976, indicated a substantial potential market for solar technologies in eight oil-producing nations [Algeria, Indonesia, Iran, Iraq, Mexico, Nigeria, Saudi Arabia, and Venezuela) The study showed that although al I eight countries preferred manufacturing solar equipment themselves rather than importing it, none was making a sufficient commitment to solar research to produce equipment which could compete with the small solar electric-generating equipment and desalinization processes being developed in the United States. State Department studies have also indicated that a smaller but significant market for solar devices exists in other oil-producing countries and in underdeveloped oil-importing nations, This last group of countries, according to surveys, was anxious to develop al I types of non petroleum energy sources and willing to devote a substantial amount of their capital if such sources have become economically and technically feasible. [a]

Some industrialized countries will develop their own solar energy industries and, as a result, will not constitute a significant market for U.S exports The exception may be certain high-technology components.

[a] Martin Prochnik, Office of Nuclear Energy and Energy Policies, Department of State, private communication, March 1977

FOREIGN COMPETITION IN SOLAR TECHNOLOGIES

Significant solar technologies have been developed in a number of other countries. Japan, Israel, and Australia produce more energy from the Sun each year than the United States, primarily because they have used simple hot-water and space-heating devices for decades France, Germany, Japan, and perhaps Israel sell more solar equipment abroad annually than the United states

There are several reasons for this. First, conventional energy in the United States has been, for the most part, plentiful and inexpensive; consequently, this Nation has delayed emphasis on solar heating and hot water (except in Florida and southern California during the 1940's and 1950's) while countries such as Japan, Israel, and Australia have been installing such devices for decades, Second, the United States spends proportionately more for research than other countries with solar budgets, most of which stress currently marketable technologies. Private industry in most other countries has been more deeply involved in solar technology than has its U.S. counterpart, and it is private industry, not the Government, that usually determines an export market. Finally, the United States spreads its financial resources among a broad range of solar technologies; many other countries stress funding of fewer specialized projects, which leads to more rapid marketing of results.

[n the past year, France has doubled its solar budget to almost $10 million per year, putting special emphasis on developing 300 kW, 800 kW, and 3.5 MW solar electric systems. West Germany, which spends about $6 mill ion per year, also increased its funding for solar energy substantially Japan is spending about $5 million per year in its government-sponsored Project Sunshine. Israel has boosted its solar commitment to about $2 mill ion. Iran has extended its solar program, opening a 1 00-person solar institute, Saudi Arabia has created a similar

center, although smaller, staffed by about 20 technologists. The Common Market has decided to build a 1 MW central thermal power station, probably in Italy, and Spain is in the process of locating a site for a solar research institute with help from the United States and several European countries.

THE IMPACT OF SOLAR ENERGY ON AMERICAN LABOR

Onsite solar technology appears to be more labor-intensive than contemporary techniques for supplying energy; thus, in the short term, the introduction of solar energy devices might create jobs in trades now suffering from serious unemployment. I n general, the new jobs will be distributed widely across the country and will not require laborers to live in remote or temporary construction sites because most workers should be able to find jobs in areas close to their homes. Work on solar equipment, for the most part, should necessitate only simple retraining programs, although there may be shortages both of engineers and architects qualified to design solar equipment, and of operators trained in maintenance of some of the larger and more sophisticated solar devices which have been proposed.

Assessing the long-term implication of technological development on the work force, however, cannot be reliably undertaken with con temporary economic methods. Long-term labor impacts will depend on forecasts of future growth rates both in the economy and in U.S. energy consumption — subjects about which there is great confusion and disagreement. Although making economic projections is hampered by imprecise methodology, it is possible at this point to outline some of the critical issues which concern the effects of solar energy development on labor.

MANPOWER REQUIREMENTS

One of the most critical issues in evaluating the impact of a new energy technology on labor, and one of the most difficult to deal with reliably, is how the technology will affect overall manpower requirements in the energy industry. Tables VI I-2 and VI I-3 compare the manpower requirements of a conventional coal-fired generating system with the manpower required to construct and to operate each of two kinds of solar devices capable of producing equivalent amounts of energy. Only first order effects have been considered, and the estimates made about solar devices are necessarily speculative. One overall conclusion seems inescapable, however: a large fraction of the value of solar equipment is attributable to direct labor costs.

The high labor intensity of solar equipment is not surprising, Most devices can be constructed from relatively inexpensive material, and the small equipment examined here would not require extensive capital-carrying charges during construction. Factories for mass production of photovoltaic devices, heat engines, and other components of solar technologies will probably employ sophisticated and expensive equipment which will reduce labor in these industries, Much of the work of installing solar equipment will continue to require direct onsite labor.

Table VI I-2 lists all labor requirements for construction at the plant site, to build the 800 MWe turbine generator in a factory, to operate the generating facility at an average of 60 per-cent of f u l l capacity for a period of 30 years, to build and operate a coal mine large enough to support the plant, to transport the 2.5 m i l l ion tons of coal per year needed to operate the plant, and to construct and maintain a transmission and

Table VII-2. —Labor Requirements for a Conventional 800 MWe Coal Plant (in units of man hours per megawatt year)

	Construction	Operating and maintenance	Total
800 MWe coal plant. ...	330	380	710
coal strip mine using western coal . . .	20	360	380
coal preparation plant.	3	290	293
coal transportation	—	340	340
electric transmission	40	5	45
electrlc dlstribut!on	190	310	500
steel & concrete production	10		10
turbine/generator manufacturing. . .	170	0	170
Total	763	1685	2348

Assumptions:
- 800 MWe coal plant operating at 60 percent peak capacitv for 30 years:
- western' coal' strip mine with 525-mile train line;
- all data based on Bechtel data with the exception of the turbine generator manufacture. It was assumed that the turbine/generator cost of $150/kW of which 25 percent was labor and that this labor was paid at an average rate of $10/hr;
- calculations divide the sum of construction manpower and 30 year operating manpower requirements by the total number of megawatt years of energy produced by the plant.

distribution network. It is noteworthy that the operating and maintenance labor is more than twice as great as the labor needed to construct the facilities, and that nearly 20 percent of the manpower rquirements in operations are used to maintain the distribution facility.

Table VII-3 presents an estimate of the labor required to build and maintain a flat-plate solar water heating system and a small tracking photovoltaic system in Albuquerque, N. Mex. The hot water system requires 1.5 to 2.5 times more labor than the conventional coal-fired generating facility and even more if the utility must maintain a substantial facility for providing backup power. The range shown for the solar devices reflects the range of labor requirements provided by collector manufacturers contacted. It is probable that the labor requirements of a mature solar industry will be close to the lower end of the range shown.

The major source of error in these estimates, apart from inaccuracies in data gathering, is the failure to consider the many secondary kinds of employment which could be created by both solar and conventional facilities. A significant fraction of this secondary labor would come in the manufacture of primary metals, glass, etc., for both solar and conventional systems. Given that the weight of solar devices would be equal to, or more than, the weight of conventional systems per unit output, it seems unlikely

Table VII-3. — Labor Requirements of Two Types of Distributed Solar Energy Systems (in man hours per megawatt year)

	Construction	Operating & maintenance	Total
1. Solar hot water heaters (8 m^2 flat plate) .,			
— manufacture collector	800-2500	0	800-2500
—install collector.	1200	0	1200
—routine O&M	—	1200	1200
Total for hot water system .	2000-3700	1200	3200-4900
Total for hot water system including backup	2340-4040	—	3540-5240
II. Tracking silicon photovoltaic system:			
a. Electrlc only (50 m^2)			
— manufacture collector and cells	2600-3300	—	2600-3300
— install collector.	1800-4600	—	1800-4600
—operate system.	·	6800	6800
Total for tracking photovoltaic system	4400-7900	6800	11200-14700
Total for tracking photovoltaic system including backup	4740-8240	—	11540-15040
b. Electric + 0.29-Thermal (Including backup).	2240-3740	3000	5240-6740
c. Electric + Thermal (Including backup).	1130-1750	1240	2370-2990

Assumptions: — 20 year system life;
— installation includes 75 feet of piping costing 0.11 MH/ft to Install;
— flat **plates installed** for 1.3 MH/m and tracking collector installed for 1.3-3.33 MH/m^2;
— cells assumed to be 18 percent efficient, optical efficiency 80 percent.
— labor for providing backup power is assumed to be 50% of the construction labor shown in table Vll-2— (e. g., 340 man-hours/ MW-year)
— flat plates assumed to provide 930 kWh/m^2-yr (Albuquerque);
cells provide 320 kWh/m^2-yr electric and 1450 kWh/m^2-yr thermal for PV system (Albuquerque);
O&M labor for PV system assumed to be 0.25 hrs/m^2-yr (see table Xl-7);
— flat plate manufacturing labor based on data from several collector manufacturers;
— concentrator manufacturing labor assumed to be .024 MH/lb of collector for PV concentrator given in table VII-7 (with concrete and **sand excluded) with the labor to produce the raw materials added;**
.024 MH/lb is approximate labor Input for automobile manufacturing based on employment and production for 1973 given in 1976 *Sfatisfica/ Abstract of the* United *States,* U.S. Dept. of Commerce, Bureau of the Census, pp. **369, 791.**

that the differences in labor requirements illustrated above would be eliminated by a more detailed analysis.

Some collector designs (e. g., plastic collectors) will almost certainly require less manufacturing labor but they will probably require more maintenance labor, while other designs which require less material (e.g., tubular designs) may require more manufacturing labor than simple flat-plate systems.

The photovoltaic system shown in table VII-3 requires more labor when only electricity is produced, because the output is about one-third that of the hot water system. The larger operating labor results from the greater complexity of the tracking system. If the system provides thermal output as well, labor input per unit of combined output would be about one-third lower than for the hot water system.

The labor requirements per unit of solar energy delivered would be higher in areas of the country which do not receive as much sunshine as Albuquerque since each unit area of collector would produce less output.

It should also be noted that onsite systems which rely on utility systems for backup would probably not reduce the labor requirements for transmission and distribution systems significantly. This is important since a large fraction of the labor required by conventional utilities is due to these energy distribution systems. A shift toward decentralized solar energy systems could, therefore result in replacing centralized facilities with solar units requiring greater amounts of labor while leaving the labor-intensive distribution systems intact.

SOME QUALITATIVE IMPACTS

While the analysis of the overall labor requirements of solar energy is very primitive, it is possible to be somewhat more confident about some qualitative aspects of solar energy's impact on the work force.

Geographic Distribution

Employment in installation and operation of solar equipment can be expected to be distributed over a large part of the country. Initial installations of solar equipment are likely to occur in places with high insolation — the South and Southwest, Locations with relatively low levels of sunlight, such as the Northeast, however, tend to have high energy prices, Thus, while low insolation levels make solar energy in the North expensive, competing energy sources are also expensive, so the net economic competitiveness of solar devices may be as high in the North as in more favorable climates, Employment in installing solar energy is, therefore, likely to be as geographically dispersed as the building industry.

One thing about solar employment seems clear— none of the small solar devices considered in this report will require the major dislocation of a work force, or the establishment of temporary work camps as may be required for construction of a pipeline, an offshore drilling operation, or a large central generating facility in a remote location. The relatively small solar devices analyzed here will provide employment in close proximity to where workers presently live, and therefore will avoid the social disruptions associated with large influxes of temporary workers.

Unlike most major manufacturing facilities, solar manufacturing at present is spread across the country in literally hundreds of small companies. The future of these businesses, however, is very uncertain. If the demand for solar equipment increases substantially, the field may be dominated by a small number of large manufacturing firms, much as the manufacturing of conventional heating and cooling equipment is dominated by a small number of firms.

On the other hand, solar devices may be designed for special climates and sufficiently site-specific for manufacturing to remain geographically dispersed, much as facilities for manufacturing modular homes are today. It seems clear that because of the

sophisticated technology employed, the manufacturing of components such as photovoltaic devices, heat engines, and concentrating devices will occur in a relatively small number of facilities.

Stability of Labor Demand Associated With Solar Equipment

If a major demand develops for solar energy, it is likely that employment in the area will be as stable as work in any typical building trade; the solar equipment will simply add jobs at each construction site. If a major retrofit market develops, there could also be major employment opportunities in this area; maintenance of solar equipment will also provide a stable source of jobs.

Skill Levels Required

Most of the employment directly created by a shift to solar energy will be in installation of the equipment by the conventional building trades, and in the creation of new manufacturing industries. The skills required for installation of the equipment will be very similar to those required for conventional construction projects, although some brief training programs will undoubtedly be desirable to familiarize workers with the new equipment and its installation. Most of the work will be in framing roofs, laying footings, plumbing collectors and storage tanks, excavating trenches and pits for piperuns and storage tanks, installing sheet metal ducting, insulating pipes and tanks, and installing electronic control units. The work will be nearly identical to the installation of sophisticated air-conditioning and heating systems in conventional buildings.

Larger solar installations, such as those serving groups of buildings and large industrial operations, are likely to require supervisors, managers, draftsmen, designers, and engineers in roughly the same proportion as these skills are required in the construction of conventional power-generating facilities. In fact, since many large onsite solar facilities are likely to be supplemental to conventional boilers and generators, the solar equipment would simply add work in these areas at each installation, There may be a shortage of engineers with adequate knowledge in areas critical to onsite power in general and solar devices in particular,

Designing a reliable and efficient onsite device for a large installation (such as an apartment or industry) requires experience with other types of equipment not now conventionally used in utilities or building energy systems. Solar onsite systems require even more expertise in order to manage the added complexities of collector design, thermal storage systems, more elaborate control systems, possibly of batteries, heat engines, and photovoltaic devices

Employment opportunities in manufacturing are more difficult to define, since the pattern of growth in the industry is presently unpredictable. Work opportunities will include glazing, metal extrusion, component assembly, and chemical processing (for photoelectric devices, selective surface formation, storage systems, etc.). It is difficult to anticipate whether the employment will be created in a large number of dispersed fabricating facilities, in large central plants, or in both.

The skills required to maintain the type of simple solar equipment installed on homes and small apartments will be similar to those required for conventional appliance maintenance of utility gas and electric power equipment. Most of the personnel in these professions will require additional specialized training in solar technology. There is a serious shortage of persons with the skills needed to operate intermediate-sized solar or conventional onsite energy equipment. Owners of small total energy systems report difficulty in finding and holding persons trained in operation and maintenance of engines and heat recovery units, energy control switching, and other associated equipment. Maintenance of a sophisticated collector system will present similar problems. Many now employed in the operation of total energy systems learned the requisite skills from the U.S.

military services. Such training appears difficult to obtain in private industry.

Tables VI I-4 and VI I-5 demonstrate jobs which must now be done to support conventional electric generating equipment. The impact of solar equipment on jobs will depend on the extent to which solar devices displace fuel consumption (replacing jobs in mining with jobs in solar technologies), the extent to which the technology would cut the demand for peak generating capacity (replacing jobs in constructing and maintaining generating equipment with jobs in solar technologies), and the extent to which the need for transmission and distribution equipment would be reduced.

These effects are listed in the order of their likelihood. It is most probable that solar technology would initially affect only fuel utilization, and would affect transmission and distribution requirements only in an extreme case where all or much of local energy needs are met with solar equipment It should not be assumed that an increase in solar utilization would necessarily replace any of the employment indicated in tables VI I-4 and VI I-5, The expected increase in U.S. and worldwide coal demand is likely to be so large that employment in mining would be unaffected by an expected penetration of solar energy into the market, Several observations can be made on the basis of the tables, however:

Ž Small solar installations are likely to employ more blue collar workers than

Table VII-4.—Skills Required for Constructing a Coal-Fired Electric Generating Plant and Operating the System Over a 30-Year Period

I. Skills Required for Plant Construction (as a percentage of the 3,576 man-years required to construct the plant and the transmission and distribution network)

	Coal-Fired Electric Generating Plant	Transmission and Distribution Facilities	Total
Non-manual construction work . .	9% (63°/0 engineers and 25% draftsmen and designers)	13% 25% draftsmen and designers)	22%
Manual construction work .	49% (variety of trades)	29% (mostly electricians)	760/0
Total construction work . . .,	58%	42%	100%

II. Skills Required to Operate and Maintain Equipment for a 30 year Interval (as a percentage of the 10,893 man-years required)

	Coal Mining and Coal Transport	Coal-Fired Generating Plant	Transmission and Distribution Facilities	Total
Non-manual operating work	17% (mostly trainmen)	6% (67% supervisors and managers)	3% (mostly supervisors working on distribution system)	26%
Manual operating work	42% (mostly miners and trainmen)	16% (variety of trades)	15% (mostly electricians and meter readers for distribution system)	73%
Total operating employment	59%	22%	18%	100%

*Details about assumptions used shown in Table VII-5.

SOURCE: Based on data in "Manpower, Materials, and Capital Costs for Energy-Related Facilities," Bechtel Corporation, April 1976.

Table VI I-5.— Detailed Breakdown of Skills Required for Conventional Electric System* (man-years per 800 MW_e coal-fired plant and associated distribution and fuel facilities)

	Western strip mine & coal crushing & sizing plant (annual operations)	Coal transport unit train (annual operations)	Coal-Fired Elastic Generating Plant (800 MW)		Electric transmissior (200 miles in length- national average)		Electric distribution		30 years of operations	Construction	Total construction & 30 years operation
			Annual Operations	Construction	Annual Operations	Construction	Annual Operations	Construction			
Non-manual workers											
1. Engineers—conductor		37							1110		1110
—civil				93	.02	12	1	81	31	186	217
—electrical	.2		4	68	08	25	3	161	218	254	472
—mechanical	.2		2	52	02	4		27	67	83	150
—mining	1.1								33		33
—industrial	.2								6		6
—safety	.2								6		6
—environmental	.1								3		3
Total engineers	2.0	37	6	213	.12	41	4	269	1474	523	1997
2. Designers and draftsmen	1		1	85		17		109	60	211	271
3. Supervisors and managers	14		14	40	.23	3	8	18	1087	61	1148
4. Other	8								240		240
Total nonmanual labor	25	37	21	338	.35	61	12	396	2861	795	3656
Manual workers											
1. pipefitters			8	400					240	400	640
2. pipefitter/welder			12	180			3		450	180	630
3. electrician	11		12	280	.36	133	36	843	1781	1256	3037
4. boilermaker			8	300					240	300	540
5. boilermaker/welder				100						100	100
6. iron worker				141		44				185	185
7. carpenter				140						140	140
8. equipment operators	36		20	100					1680	100	1780
9. other	68	37		120	.37		16		3641	120	3761
Total manual labor	115	37	60	1761	.73	177	55	843	8032	2781	10813
TOTAL LABOR	140	74	81	2099	1.08	238	67	1239	10893	3576	14469

* Based on Information in *Manpower, Mater/a/s and Capital Costs for Energy Related Facilities*, John K Hogle, et al , Bechtel Corp for Brookhaven National Laboratory Associated Universities, Inc , Contract No 354617S, April 1976

professional employees. Solar installations on individual buildings typically require one supervisor for each 10 workmen, [9] while the ratio for the conventional coal equipment shown in table VI *I-4* is closer to 1 to 3, The larger industrial and community solar systems would, however, require much more professional work.

- Nearly *50* percent of the jobs associated with operating and maintaining conventional equipment is associated with coal mining and transporta-

[9] FEA *Project Independence* Task Force Labor Report

tion. Jobs in these sectors could be replaced with jobs in repair and maintenance of onsite equipment.

- About 40 percent of the work required to build a conventional electric system and *30* percent of the work required to maintain it is associated with distribution equipment, which is unlikely to be affected by solar technology.

Working Conditions

Expansion of the solar energy industry should not raise serious health or occupational hazards, but some of the possible problems are discussed below. The manufacture of some photovoltaic devices employs cadmium and arsenic compounds which could present hazards to workers assembling these units. Manufacture of plexiglass and other plastics used in photovoltaic devices can also involve handling potentially harmful chemicals. These manufacturing hazards are not unique, however, because these compounds are widely used in other industries. Some steam-fitting jobs will involve high-pressure steam lines, and some proposed thermal storage methods will require very hot oils, possibly explosive or toxic. These issues deserve serious attention before such installations become common place. Devices using hazardous material may only be employed in larger, more centralized solar facilities and are unlikely to be found in onsite residential systems. Replacing jobs in coal mining for those in *solar* equipment maintenance, however, would probably result in overall improved working conditions.

Organized Labor

organized labor is enthusiastic about solar energy's potential for creating jobs. Like many other construction trade unions, the sheet metal workers (SMWIA) have been hard hit by unemployment: the SMWIA has a national unemployment rate of 30 percent to 35 percent, with unemployment reaching 50 percent to 60 percent in some areas of the North and Northeast [46]) These are regions where energy prices have risen very rapidly in recent years. I t is possible that sizable near-term markets for solar equipment can be found in these areas in spite of their re atively unfavorable climates.

I n 1970, the plumbers and pipefitters had a nationwide unemployment rate similar to that of the sheet metal workers. A potential labor problem associated with implementation of solar technology is the question of which union will subsume the categories of newly created jobs. Until recently there have been few solar installations so that few u n ions have staked out terri toritorial prerogatives. For the most part, the solar energy field is still wide open to jurisdictional competition. The situation can be expected to change as more work in the area becomes available. An arrangement has already been negotiated between the Sheet Metal Workers and the United Association of Plumbers and Pipefitters which calls for joint crews in the installation of hot air collectors using liquid storage systems, Jurisdictional disputes could be a serious problem in other areas, however, unless al I issues can be settled as amicably as this one has apparently been.

Generally, union officials feel that an upsurge of solar construction and installation would radically alter the number, not the types of jobs available to union members. Firms that now produce heating, ventilating, and air-conditioning equipment— many of them already active in solar collector construction — would simply expand their operations. Any new firms established would be unionized in conventional ways.

While labor has occasionally resisted the introduction of new technologies into the building industry, this resistance has always been directed at technologies which reduce jobs on each building site or which transferred employment from one building trade to another. The disputes associated with the

[46] B McMonigle, SMWIA, private communication, 1977

introduction of plastic plumbing, prehung doors, and metal studs all resulted from one of these effects. Solar equipment would add work at each site without displacing work in other areas, It is, therefore, difficult to imagine any group with a motive to resist its entry into the market.

LONG-TERM IMPACTS

The overall impact of generating a substantial fraction of U.S. energy from small solar devices is hard to assess, since current economic theory has no satisfactory method for such analysis. None of the major price equilibrium models used to determine the future of U.S. energy supply and demand adequately treat employment issues; most make the overwhelmingly simple assumption that there will be full employment during the entire period analyzed. As a result, many of these models tend to ignore the influence of alternative energy strategies on unemployment, The difficulties of predicting economic impacts are magnified by the lack of information necessary to translate a workable theory or model into useful policy.

In the absence of an adequate methodology, the most critical questions involving the impact of solar technologies on the work force cannot be answered with certainty. An example of one difficulty can be seen in the problems associated with interpreting the implications of labor intensity. If rapid rates of growth are expected in both the U.S. economy in general and the energy production sector in particular, and if unemployment is expected to be very low as a result, any shift to a labor-intensive technology like solar energy could prevent wages from keeping pace with growth in other sections of the economy, An industry with high labor intensity requires more manpower for the same output than industries with low labor intensity. As a result, the average wage paid per worker must be lower for the labor-intensive process. If growth is not expected to be sufficient to eliminate unemployment, labor-intensive industries will be beneficial to both labor and society by productively employing a larger fraction of the work force.

Other questions which must be addressed include:

1. To what extent would the energy produced by solar equipment displace imports, nuclear, or indigenous fuel supplies? To what extent will solar energy fulfill energy needs that might not otherwise be met? (If solar energy filled such needs, employment could grow i n areas of the economy not otherwise possIble.)
2. To what extent will solar energy sources be able to reduce the need for installing additional electric generating facilities as well as reduce the demand for fuel?
3. If imports are reduced, and funds invested instead in U, S. solar industries, how much direct and indirect employment would be created? How much would employment be reduced in industries now benefiting from the export market stimulated by our purchase of foreign fuels?
4. What kinds of growth rates can be expected i n energy sources other than solar energy? W i I I this growth rate be constrained by a shortage of capital, resources, and demand, or by a shortage of critical skills? Would solar energy compete directly for scarce resources or would it be able to tap other capital or labor supplies?
5. What kind of work force dislocations could be expected in a shift from one energy source to another? Would new skills not now available **in the building trades be demanded? What kinds of transient unemployment** could be expected?

NET ENERGY USE OF SOLAR EQUIPMENT

Clearly solar energy devices cannot provide a useful contribution to the world's energy problems if more energy is used to construct the devices than can be extracted usefully from them. A brief examination of this question indicates that solar equipment can clearly be a net producer of energy. Unfortunately, no straightforward methodology has been developed for computing the total amount of energy consumed in manufacturing, installing, and operating a piece of mechanical equipment. Two different techniques will be used here: 1) computing the primary energy required to manufacture the materials used in the solar collectors and conversion devices, and 2) computing the energy used by assuming that the energy used per unit investment in solar equipment is the same as the national average energy use per unit of investment. The results of both approaches are shown in table VI I-6

PRIMARY ENERGY REQUIREMENTS

The amounts of different types of materials required to construct five representative onsite solar energy systems are illustrated in table VII-7 and the estimated energy content of these materials is shown in table VII-8. (It is assumed that energy consumed in manufacture, installation, and transportation of collectors is relatively small.) The largest uncertainty shown in these tables is the energy required to manufacture silicon. The larger estimate of the energy content of silicon reflects the technology of manufacturing silicon and fabricating silicon which was used in mid-1975. Recent improvements in manufacturing techniques have reduced the energy required in this process and further reductions are expected using techniques now in development (see chapter X). The lower figure shown in the table assumes that silicon is manufactured using an advanced technique in which energy conservation has been carefully considered.

Energy requirements of silicon cells could probably be reduced below the lowest number shown in the table if a technique is developed for manufacturing thin cells from amorphous silicon material. The amorphous cells may require as little as 1 percent of the silicon required in contemporary cells. Silicon cells now require an energy consuming crystal growing process and the resulting crystals must be sliced into wafers. Both processes waste a considerable amount of silicon,

It should also be possible to reduce the amount of energy required in the manufacture of many other of the products shown in table VI I-8 if close attention is paid to energy conservation. The energy content of U.S. steel, for example, has declined by 25 percent since 1947, and the Germans use about 68 percent as much energy as the United States uses to manufacture steel.[11] The Aluminum Company of America (ALCOA) has apparently developed a smelting process capable of nearly halving the energy used to manufacture aluminure.[12] It can be seen from table VI 1-6, however, that acceptable "energy-payback" times can be achieved even if the materials are manufactured using 1970 U.S. technology.

It must be remembered that the energy content of the solar devices shown does not include any of the energy required in factories which assemble the collectors, the trucks which deliver the materials to the factory and the collectors to the installation site, the food consumed by installation workers, or a number of other "secondary" sources of consumption,

---

[11] M H Ross and R H Williams, *Energy and Economic Growth*, printed by the Joint Economic Committee in Achieving the Goals of the Employment Act of 1946— Thirteenth Anniversary Review, Volume 2, Energy Paper No 2, Aug 31,1971 (91-592), p 7

[12] J G Meyers, et al , *Energy Consumption in Manufacturing*, report prepared by the Conference Board for the Energy Policy Project of the Ford Foundation, Ballinger, Cambridge, Mass , 1974

Table VI I-6 .—Energy Payback Relations for Onsite Solar Conversion Systems in Albuquerque

(See Tables VI I-7 & 8 for Assumptions)

	Stirling engine in tracking dish	Concentrating photovoltaic system (100x)	Flat plate photovoltaic array	Flat plate thermal collector	Pond thermal collector
1. energy required to manufacture one square meter of collecting system (kWh/m2	450	425*-525	301● -8844	185-320	16-250
2. energy produced by the s stem annually (kWh/m²year)					
—thermal	1050	1440	—	930	400-800
—electrical + ...	2069	1100	1000	—	—
(primary energy) equivalent)					
3. payback time computed from (1) and (2) above (in months)					
—payback from thermal energy	5.1	4.4 (3.5)*	—	2.4-4.1	0.5-3.8
—payback from electric energy	2.6	5.7 (4.6)*	106 (3.6)*	—	—
—payback from total energy	1.7	2.5 (2.0)'		2.4-4.1	0.5-3.8
4. allowed cost of system (in $/m²) for a 1-year energy payback time assuming that solar devices use the same energy input per dollar of initial cost as the U.S. average of new investments					
—thermal	88	120		77	33-66
— e l e c t r i c a l	172	291	83 (700$/kW)	o	—
—total	260	411	83	77	33-66

•Assumes advanced manufacturing techniques.
+ Average efficiency of electric generation and transmission distribution assumed to be 290/..

NOTES: It is assumed that the engine used is 32% efficient and that the optical systems in the concentrators are 80% efficient Flat-plate silicon cell arrays are assumed to be 12% efficient and concentrator cells are 20% efficient (See volume II, chapter IV for detailed assumptions)

ENERGY USE PER DOLLAR OF GNP

One technique for counting all of the energy which might enter a solar energy system from secondary sources is to examine the average consumption of energy in the United States per unit of GNP. [3] An examination of the incremental change in energy consumption per incremental change in GNP over the past 20 years shows that in the United States about 12 kWh were consumed for each added dollar of GNP. The average kWh consumed per dollar of GNP has averaged 9-10 during the past few years. (All quantities in 1976 dollars.) The link between GNP and energy consumption is the

[3] Technique suggested by Dr R D Huntoon, President, MEMO, Silver Spring, Md.

Table VII-7.– Materials Required in Solar Energy Devices (kg/m²)

	Concentrator + stirling engine	Concentrator + silicon photovoltaic	Flat plate silicon photovoltaic	Flat plate (thermal only)	Pond (thermal) only
Steel . . .	30	27	0-3	4-8	0
Glass . . .	16	16	6	6-12	0
Concrete	79	79	0	0	0-40
Sand	115	115	0	0	0
Polyurethane	0.3	0.3	0	0	0.6-6
Copper	0.4	0.4	0	4-8	0
Silicon cells .	0	0.0024 '-0.007	0.24 '-0.71	0	0

"Using advanced manufacturing techniques (not using amorphous silicon)

Energy Content

SOURCES Concentrator data from Hildebrandt, A F , and L. L Vant-Hull, "Power with Heliostat s," Science 197 (1977). p 1139

Silicon data from L P Hunt (Dow Corning Corp) Total Energy Use in the Production of Silicon Solar Cells from Raw Materials to Finished Product *The Conference Record of the 12th IEEE Photovoltaic Specialists Conference*— 7976 Baton Rouge La November 1976 p 349

Other CO l lector data from man ufacturers

Table VII-8.— Primary Energy Required to Produce Component Materials for Solar and Conventional Power Systems

	Total energy requirement (kWh/kg)	Source of input Energy (in percent)				
		Coal	Oil	Gas	Electrlcity	Fuel byproducts
Polyvinyl chloride resin, .	22	9.1	19.4	55,6	23,4	(7.5)
Portland cement —wet process	2.1	30.4	13.7	39.9	16.0	—
—dry process. . .	**1.9**	**42.6**	**8.0**	**32.4**	**17.0**	—
Copper	30	10.1	13.5	38.4	38.0	—
Steel ... .,	5.1	81.1	6.6	13.5	8.4	(9.6)
Glass containers . .	4.8	35.8	7.3	48.8	14.5	(6.4)
Silicon	12400-1050	–	–	–	~100	—

SOURCES The Data Base The Potential for Energy Conversion in Nine Selected Industries, FEA, June 1974, p 20

Silicon data from Hunt, L P

subject of consider-able contention [4] but it is c l ear that the ratio is to some extent the function of the society West Germany and Sweden, for example, consume about two-thirds as much energy per unit of GNP as does the United States, although an exam i nation of recent Swedish data seems to indicate that since the late 1960's the incremental amount of energy consumption per incremental amount of GNP in that country has been close to that of the United States. The statistics cited in the previous

[4] See Ross and Williams, op. cit

section at least indicate that it is possible to shift energy consumption from the manufacture of primary materials to other areas of the economy— areas where energy consumption per unit of value may not be as great.

The allowable cost for solar energy systems capable of "paying back" the energy invested in them in one year (assuming the current U.S. ratio of incremental energy to incremental GNP) is shown in table VI i-6.

Since the allowed costs computed in this may correspond to costs which can probably be achieved with solar devices, the results of this method are roughly consistent with the previous method; both indicating that net energy should not present a barrier to the use of solar energy. (It should be noticed that if it is assumed that solar manufacturing is more energy intensive than an average process in the economy by some ratio *R.* then a solar system with a cost equal to the allowed cost shown in the table would require *R* years to pay back the energy it contain s.)

THE IMPACT OF ONSITE ENERGY ON THE ENVIRONMENT

While solar energy equipment is not free of adverse environmental effects, providing energy from sunlight will have a much smaller environmental impact than conventional sources providing equivalent amounts of energy. The primary environmental effect of utilizing onsite solar energy will be reduction of the potential adverse environmental effects associated with other energy sources.

The negative environmental effects of solar energy devices stem primarily from two **sources: (1) land use requirements, which could compete with other, more attractive uses of land, especially near populated areas, and (2) emissions associated with the mining and manufacture of the materials** used to manufacture solar equipment (manufactured steel, glass, alum inure, etc.). In general, solar devices manufactured using conventional energy sources, create more pollutants while they are being manufactured than an equivalent conventional plant (primarily because solar equipment requires a greater capital investment per unit of output) but this assymetry is outweighed by the fact that the solar devices produce much less pollution during their operational lifetimes. The net emissions associated with solar devices are much smaller than those of conventional fuel-burning plants.

Solar energy devices can change the amount of energy absorbed by the Earth's surface, and could have some small effect on the local thermal balance. The effect, however, would typically be no greater than the change in local climate produced by covering land with equivalent areas of highways, buildings, or parking lots.

In addition to these primary effects, a number of the specific storage and energy conversion systems discussed in other sections of this study wouldl have adverse environmental effects because of noise, local heat and other minor emissions, and use of toxic chemicals. These effects are discussed in the chapers about individual technologies.

DIRECT ENVIRONMENTAL EFFECTS

Emissions Associated With Operating Energy Equipment

The primary direct impact of solar energy on the local environment will be the elimination of adverse environmental effects attributable to the burning of conventional fossil fuels. The damage done to the environment by conventional energy sources is well known, although the magnitude of the long-term health and climatic effects is still being determined. The large number of ways in which producing electric

energy from a coal-f i red steam plant, for example, can adversely affect the environment are suggested below:

- Strip mining required to harvest the coal resources can permanently change local topgraphy, alter stream beds, disrupt or contaminate ground water, and produce large amounts of rubble, noise, and dust in mining areas. Reclamation can be difficult, particularly in areas where water shortages exist. Underground mines have fewer external effects, but can create safety and health problems for miners
- Processing the coal can produce large amounts of solid waste and cause toxic chemicals to be released into local water.
- Transporting coal can require the use of trains which burn oil or use electricity from some fossil source In some cases new rail lines will be required.
- **Burning coal produces large amounts of airborne particulates, sulphur and** nirogen compounds, hydrocarbons, carbon monoxide, and a variety of other a i r contaminants In addition, large amounts of solid waste are produced either as coal ash or as by-products of removing chemicals from the smokestacks of the plants
- Once generated, the electricity must be transported along extensive networks of transmission and distribution lines which require the clearing of long strips of land

Several recent studies have also indicated that continued large-scale consumption of fossil fuels could release so much carbon dioxide into the atmosphere that the gas would create all green house" effect, raising the average temperature of the Earth's atmosphere by as much as 6 "C (11 "F) i n 100 to 200 years.[15] The impact of such a climate change on agricultural production and the polar caps is difficult to predict. In addition, the effect of using solar energy to replace gas, oil, or wood home space and water heating would be to reduce the thermal and chemical pollution associated with these means.

Negative environmental effects can also be expected from other conventional approaches to electric generators. Electricity provided from nuclear fission devices would avoid many of the environmental impacts associated with the consumption of coal, but the nuclear process produces thermal pollution and radioactive wastes with long lifetimes. Hydroelectric facilities eliminate most of the negative impacts of other electric sources, but can have a major impact on land use because of the need to flood land areas. Natural gas has fewer adverse environmental i m pacts, but reserves are drastically depleted,

A comprehensive description of all environmental impacts of conventional energy sources is beyond the scope of the present study, but a brief comparison of the impact on air and water quality by solar and conventional energy sources is shown on table VII-9). As a standard of comparison, table VI I-9 also shows the energy needed by a typical single family detached residence in Omaha, Nebr., for 1 year (The exact characteristics of this house are described in volume 11, chapter IV. It can be seen that use of natural gas is the environmentally preferred approach of providing heat and hot water to the house Even the solar total energy system, which provides about 75 percent of all electric needs from a solar collector, is ultimately responsible for more pollution if the remaining 25 percent is from electricity generated from coal. Yet, natural gas supplies are diminishing, so other sources of energy for home heating must be found One possible alternative, shown in the chart, is the use of synthetic gas

A home which burns synthetic gas would be responsible for considerably more air and water pollution than a home supplied with natural gas because coal must be mined and

[15] R R Reuelle, (panel chairman) National Academy of Sciences *Energy and Climate*, Prepublication Draft, Washington, D.C., 1977

Table VII-9.—Ernissions Associated With the Energy Requirements of a Single Family House in Omaha, Nebr.

		Energy consumed in 10^3 kWh	Primary fuel consumed in tons of coal equivalent per year	Pounds of NO_x released annually	Pounds of SO_x released annually	Pounds of hydrocarbons released annually	Pounds of CO released annually	Pounds of particulates released annually	Thermal discharges released annually (in 10^3 kWh)	Pounds of waste solids released annually
Natural gas heat	gas	56	(8.0)	(2)	—	(2)	(4)			
Natural gas hot water	electricity	12	(5.9)	(40-80)	(33-120)	(2)	(2-7)	(1 3-1 20)	(20)	(5200-6400)
Electric a/c	Total	—	13.9	42-82	33-120	4	6-11	13-120	20	5200-6400
Synthetic gas heat	gas	56	(16.0)	(42-97)	(12-56)	(3.5-7)	(76)	(27-320)	—	(5900-11,200)
Synthetic gas hot water	electricity	12	(5.9)	(40-80)	(33-120)	(2)	(2-7)	(1 3-1 20)	(20)	(5200-6400)
Electric a/c	Total	—	21.9	82-180	45-170	5.5-9	8-83	50-440	20	11,100-17,600
Baseboard heating Window a/c Electric hot water		50	25	160-330	140-480	9	7-28	50-510	85	21,500-27,700
Heat pump Electric hot water		40	19.7	130-260	110-390	7	6-22	40-400	68	17,200-21,300
Solar hot water (11 m^2) Heat pump Electric hot water backup		32	15.6	100-210	90-300	5	4-17	35-320	54	13,900-17,000
Solar hot water and heating (40 m^2) Heat pump backup Electric hot water backup		25	12.4	80-160	70240	4	3-14	27-250	43	10,800-13,300
Solar electricity from P.V. cells (100 m^2) Heat pump Electric hot water		19	9.1	60-120	50-180	3	3-10	20-190	32	8,200-10,100
Solar electric/thermal P.V. system (92 m^2) Heat pump backup Electric hot water backup		16	7.7	50-100	40-150	3	2-9	20-160	27	6,900-8,500

NOTES — coal gassification from unit fixed bed high BTU plant (see Synthetic Fuels Commercialization Program op cit)
net conversion efficiency of electric generation assumed to be O 29 and coal assumed to have 12000 Btu l b
– coal plant uses f lue gas scrubber

SOURCE The numbers on this chart are based in part on Information provided by K R Smith John Weyant and John Holdren *Evaluation of Conventional Power Systems* Univ of Cal at Berkeley July 1975. p 119

processed to produce the synthetic gas. Emission levels in this case, however, are still below those associated with burning coal directly for use in electric heating.

As the table shows, any of the coal-based processes for producing residential energy result in the release of large amounts of emissions into the environment, For example, the house heated with baseboard heating units releases 160 to 330 lbs. of nitrogen oxides, 140 to 480 lbs. of sulphur oxides, 9 lbs. of hydrocarbons, 50 to 630 lbs. of particulate, and nearly 2 tons of solid waste per year. (These amounts include all direct emissions associated with mining, processing, transporting, and burning coal at generating sites.) The solar devices reduce these releases in direct proportion to the amount they reduce electricity consumption.

The analysis has only considered environmental impacts resulting directly from the burning of fossil fuels in mining, transport, or generating processes associated with the production and transmission of energy A number of processes indirectly connected to the construction and operation of both conventional and solar equipment could also have adverse environmental effects — mining and refining materials used to fabricate generating devices, transport equipment, and other energy production apparatus. All of these require energy, and the production of the energy results in environmental damage. These secondary impacts are extremely clifficult to analyze quantitatively because an accurate assessment would require a model broad enough to encompass the entire economy. If solar energy or other energy equipment increases the demand for steel, it is not clear whether the indirect environ mental effects can be computed simply by calculating the energy required to construct this steel and the damage charged to the account of the energy source responsible, i.e., solar, since the use of steel for energy equipment might reduce the use of steel for other types of equipment. Alternatively, the production of additional energy could increase demand for goods in the **economy and in turn stimulate energy consumption, thus increasing environmental damage by other sources.**

Emissions Associated With the Manufacture of Solar Energy Equipment

Since solar energy equipment typically has a higher initial cost than conventional systems, it is not surprising to find that larger amounts of pollution are associated with their manufacture (assuming that the solar devices are constructed using energy derived from conventional energy sources). An estimate of the emissions associated with the manufacture of various types of solar energy devices capable of producing the same annual energy output can be obtained by combining the information in tables VI I-7 and VI I-8 in the previous section with the estimates of emissions associated with different energy sources shown in table VI I-10. Table VI I-11 presents the results of this analysis by indicating the number of months that several types of solar energy systems would have to operate before the emissions associated with providing an amount of energy equivalent to the energy derived from the solar device equals the amount of emissions associated with the manufacture of the solar device. (The conventional system used for comparison is a coal-fired electric generator.) The results are roughly equivalent to the "energy-payback" times computed previously.

The tables show once again the importance of reducing the energy consumed in manufacturing silicon photovoltaic devices used without concentrators.

PROBLEMS ASSOCIATED WITH ONSITE FOSSIL BACKUP

Solar energy systems which rely on onsite combustion of fossil fuels as backup for solar space heating and air-conditioning or electric-generating equipment would have a direct impact on air and water quality since emissions would be released whenever the backup systems were used. The total amount of gaseous and solid pollutants produced by such onsite backup might be no larger than the amounts produced by large centralized generating plants providing equivalent backup services Emissions from the onsite combustion would generally be released much closer to populated areas and, as a result, pollutants could have a greater impact on health.

ONSITE SOLAR ENERGY SYSTEMS AND LAND USE

The collectors employed in many of the onsite solar energy devices discussed in this paper can be either conveniently located on the roofs of serviced buildings or gracefully integrated into the surrounding landscape. In a number of situations this will be impossible, and collector fields will require and area which could probably be put to other purposes. The resulting competition for land will be particularly serious for on-

Table VII-10.—Primary Emissions Associated With Energy Resources Available for Residential, Commercial, and Industrial Consumers (pounds per thousand kWh of heating value reaching consumption site)

	SO_2	NO_x	CO	HC	Particulates	Waste Solids	Reference
1. Residential systems							
—Natural gas .	nil	0.3	0.7	0.03	nil	nil	(1)
—Oil (0.2%` sulphur)	0.75	0.3	0.10	0.06	0.10	nil	(1)
—Electricity (from a ., coal-fired baseload generating plant).	2.8-9.6	3.3-6.6	0.14-0.6	0.11-0.19	1,1-10.2	431-533	(2)
—Synthetic gas ., ...	0.22-1.0	0.75-1.73	70.10 1.4	0.063 - 0.126	0.49-5,78	106-199	(1) (3),(4),
II. Commercial and industrial systems							
—Natural gas	nil	0.34	0.68	0.03	nil	nil	(1)
–Oil	0.75	1.71	1,71	0.68	0.34	nil	(1)
—Coal (western-stoker)	3.07	1.88	0,20	0.06	16.0	28.3	(1)
—Coal (high sulphur)	4.10	1.71	2,39	0.06	0.20	123.9	(1)

"Assumes a lime-scrubber, flue-gas, desulfurization system.

SOURCES: 1 Evaluation of the Feasibility for Widespread Introduction of Coalinto the Residential and Commercial .% ectors, Volume I, prepared by the EXXON Research and Engineering Company for the Center fOr Environmental Quality Draft report, dated April 1977, p. 8

2- Evaluation of Conventional Power Systems, prepared by the Energy and Resources Program of the University of California at Berkeley. July 1975, P 119

3 Kirk R Smith, John Weyant and John Holdren " Evaluation of Conventional Power Systems, University of Call fornia at Berkeley, July 1975, P 136

4 Synthetic Fuels Commercialization Program Draft Environmental Statement, Synfuels Interagency Task Force on Synthetic Fuels, Volume IV. December 1975, PP IV-12 and IV-40

Table VII-11 .–" Payback Time" for the Emissions Associated With the Manufacture of Solar Energy Systems

(expressed as the number of months the system must operate to displace energy which, if generated in a coal-burning electric generating facility equipped with a scrubber, would equal the emissions associated with the manufacture of the solar device)*

Solar Energy System

mission Type	Pond (thermal only)	Flat-plate (thermal (only)	Flat-plate (silicon photovoltaic)	Concentrating photovoltaic with silicon cells (electric only	Concentrator with high efficiency heat engine.	
					electric only	thermal only
1. SO_2	.03-1.4	0.6-1.1	3.3-106	6.1	2.9	1,1
2. NO_x	.05-1,8	0.6-1.3	3.4-106	6.0	2.8	1.1
3. co	0.5-15	3.7-7.5	5.1-109	26	14	5.1
4. Hydrocarbons.	0.3-8.0	2.0-4.1	3.9-109	15	7.6	2.9
5. Particulate. . .	.08-4.4	1,7-3.4	3.7-108	24	13	5.0
6. Waste solids . .	.02-0.6	0.3-0.6	3.2-106	2.5	0.9	0.3

'These times assume that emissions associated withelectric generation are the medianof the values given in table VII 10

site solar systems where the required land is close to populated areas. The land clearing required for collector fields under these circumstances and the denial of alternative uses of open land close to living areas constitute by far the largest negative impacts of this type of onsite solar technology. Conventional energy sources also require substantial land areas for mining, and for generating and transmitting power, but much less land is required per unit of energy produced and the land, for the most part, is remote from densely populated areas.

The land use issues cannot be dealt with in general terms, The eventual outcome of each case will depend on the skill and imagination of architects and planners as well as the tastes and values of the individuals and communities served by solar equipment.

Negative impacts of collector fields on land use will be evaluated in three main areas:

- building orientation and landscapi ng
- community design
- Ž the environmental effects of coll ector fields.

The following discussion will point out some of the anticipated problems in this field, and outline some possible techniques for resolving difficulties.

Land Use Impacts Associated With Building Orientation and Landscaping

The environmental impacts of solar energy devices can be reduced in most cases by placing as many collectors as possible on the roofs or walls of buildings. (The impact on building design and appearance and the amount of area available for different types of architecture will be discussed in the next section.) In many cases, however, it will be impossible to find enough area on buildings for an efficient solar system Existing buildings may be shadowed during the day or may have sloping roofs which are not properly oriented for efficient solar collection A detailed study of the number of buildings In different regions having proper solar orientations would be extremely valuable in assessing the potential market for retrofitting existing structures with solar equipment.

Orienting new buildings to maximize opportunities for collection of available sunlight can create problems. I n most new communities the orientation and placement of buildings is dictated by the location of sewers, water lines, electric mains, local topography, main access roads, etc. The direction of the Sun is rarely a consideration. Proper orientation of buildings for solar energy purposes could increase the cost of houses in the community; for example, services for providing utilities might have to cover greater distances, driveways might have to be extended to permit cars to enter garages or carports which were not facing the street, etc. These, and other aspects of community design, would promote energy conservation which inevitably will become more important to buyers as the price of energy increases (see figure VII-3).

In some situations a building constructed to take maximum advantage of the Sun will not supply enough roof or wall area for the required collectors. The site itself may be shadowed during the day, or basic requirements of the building may limit available alternatives. I n a highrise building, for example, the roof area will not be adequate for more than a simple solar hot water system, but more area can be obtained for solar collector if the south-facing wall is partially covered by collectors (vertical collectors gather 50 to 75 percent of the energy which would have been provided by collectors with the same surface area oriented at an optimum angle on the roof).

Since the combination of roof and wall areas may not adequately provide more than a small fraction of the energy requirements of some buildings, additional collectors must then be placed in arrays on the ground It may be preferable to locate these additional collectors close to the buildings served by the solar equipment, since this would maximize alternatives for

Figure VII-3–A Small Housing Development Using Solar-Heating Devices

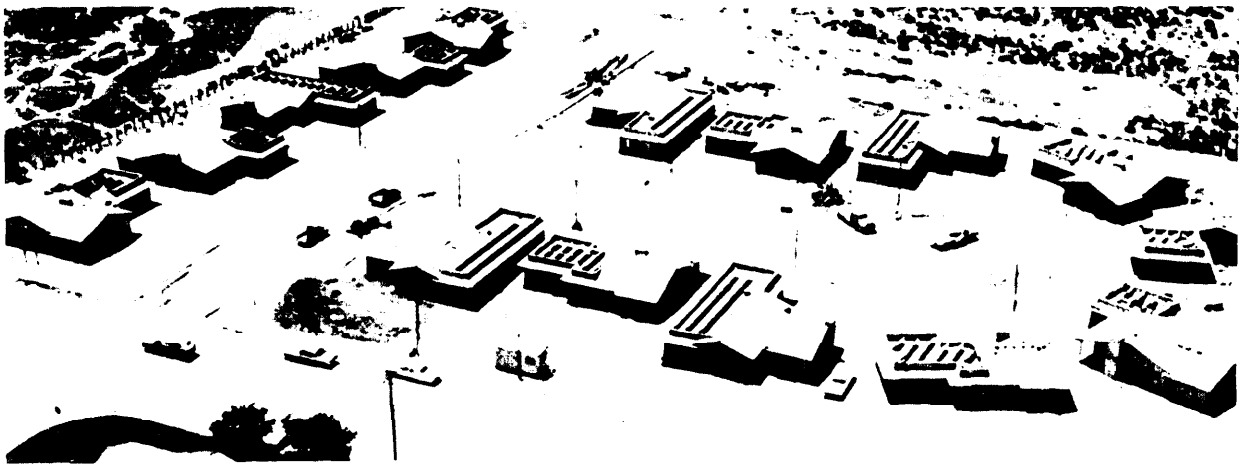

SOURCE Mother Earth News, No 45, May-June 1977, p 1090

multiple use of the collector areas and minimize the cost of transporting the energy produced by the collectors.

Many proposed multiple land uses would coordinate collector fields with other land uses. For example, solar collectors could shade the upper level of parking lots (as shown in figure VI 1-4), or in other cases the collectors could shade patios or playgrounds. Lawn or shrubs can be grown under the collectors as figure VI I-5 shows.

Wide spacing of collectors, or the placement of collectors on poles over parking lots, will increase the price and possibly reduce the efficiency of the collector system. These effects must be carefully weighed against the advantages of reducing the system's land-use impacts. There is room for much creative work in this area which will require a judicious mixture of engineering, landscaping, and building design concepts.

Solar Collectors and Community Design

To design a new residential community or commercial area for the maximum use of solar energy is easier than to implement solar collection in individual situations since, for example, plans can be made to orient buildings properly, height restrictions can be used to minimize shading, and areas can be set aside for collector fields to reduce their disruptive effect on the community and maximize the likelihood of multiple land use. A variety of community designs maximizing the use of solar energy are possible, but problems are associated with each.

If it is not physically possible or economically desirable to locate collectors close to building sites, the question of locating sufficient collector areas arises. **It** must be determined, for example, whether the system should be located in a remote area, generating only electricity, or whether the system should be located closer to the community or industry served, and generating thermal energy as well. Remote location of the solar energy systems would permit the use of less expensive land, and would avoid the problems associated with competing for scarce open areas close to population centers but it would increase transmission costs and possibly reduce design flexibility (see chapter IV).

Another possibility applicable especially in new developments, would be to centralize the collector field and distribute the community around it. Multiple land uses would be encouraged by allowing centralized parking or some recreational areas to be combined with collector fields but the reduction in the density of the community could result in added expense for other urban services (roads, utilities, etc.).

Figure VII-4– Tracking Collectors Mounted Over a Parking Lot

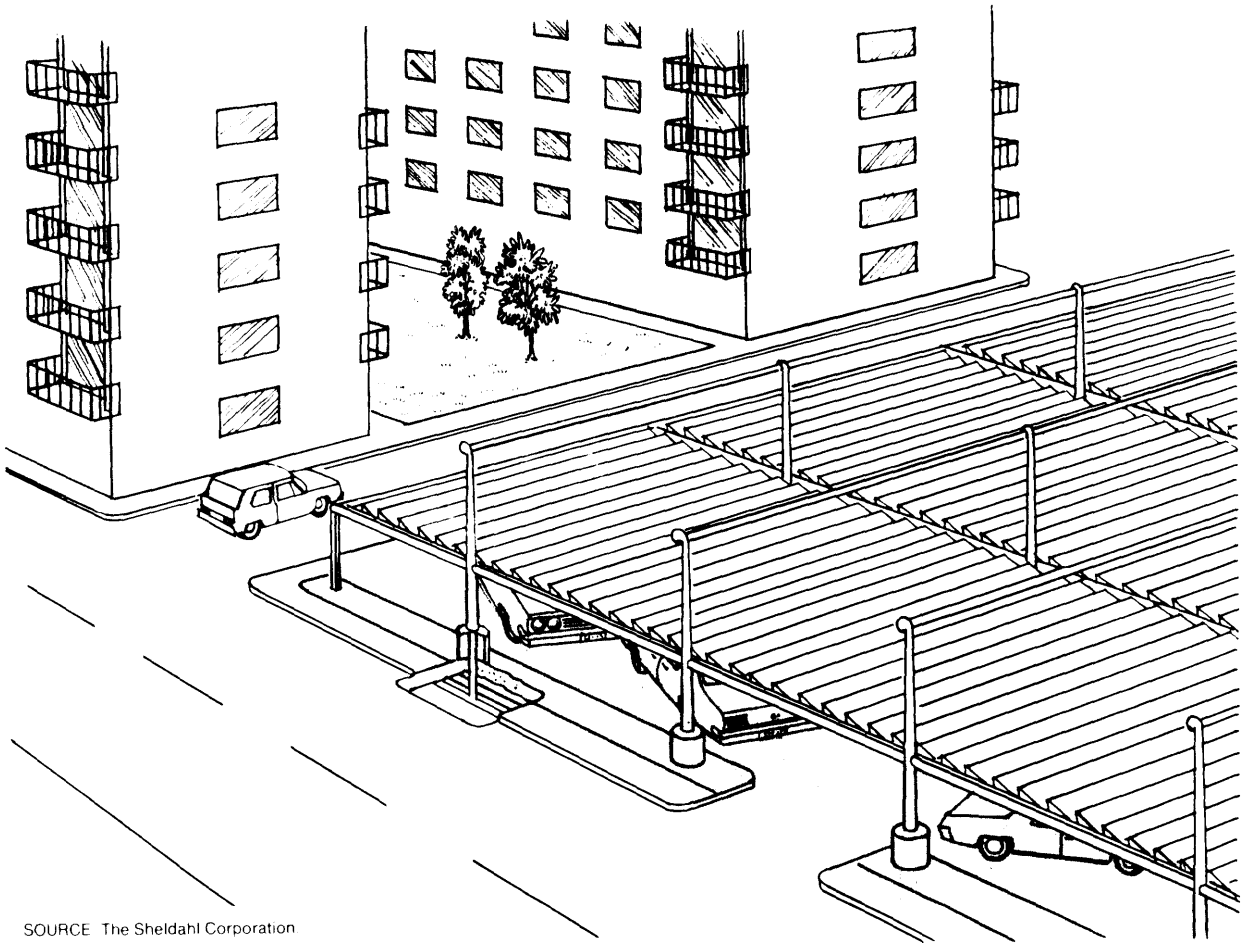

SOURCE The Sheldahl Corporation

The prohibitive expense or simple unavailability of land close to population centers will be major constraints on the use of onsite solar facilities in or near existing communities. If solar collector fields are to be integrated into population centers, factors such as population patterns, the size and location of trees, the types of buildings found in the area, etc., must be considered.

The use of solar energy in individual buildings can be encouraged by intelligent community planning, In the computer-modeled residential community of 30,000 persons examined in this study, for example, 300,000 to 500,000 m^2 of collectors could be placed on the roofs of buildings (depending on the slope of the roofs) and an additional 400,000 to 600,000 square meters of a area would be available over parking lots and perhaps 250,000 m^2 would be available over highways. If all of these areas were covered with s i l icon photovoltaic devices and if adequate storage were available a continuous output of 17 to 28 MW i n Omaha, Nebr, and 23 to 37 MW in Albuquerque, N Mex , could be provided. While this would not be adequate for all of the community's needs, it would greatly reduce the land requirred *for* ground-mounted collector arrays.

It **may** be very difficult to design a solar community in a heavily forested area and trees in existing neighborhoods may present prohibitive problems for some sites. A great

Figure VII-5.—Vegetation Growing Under Arrays of Solar Collectors

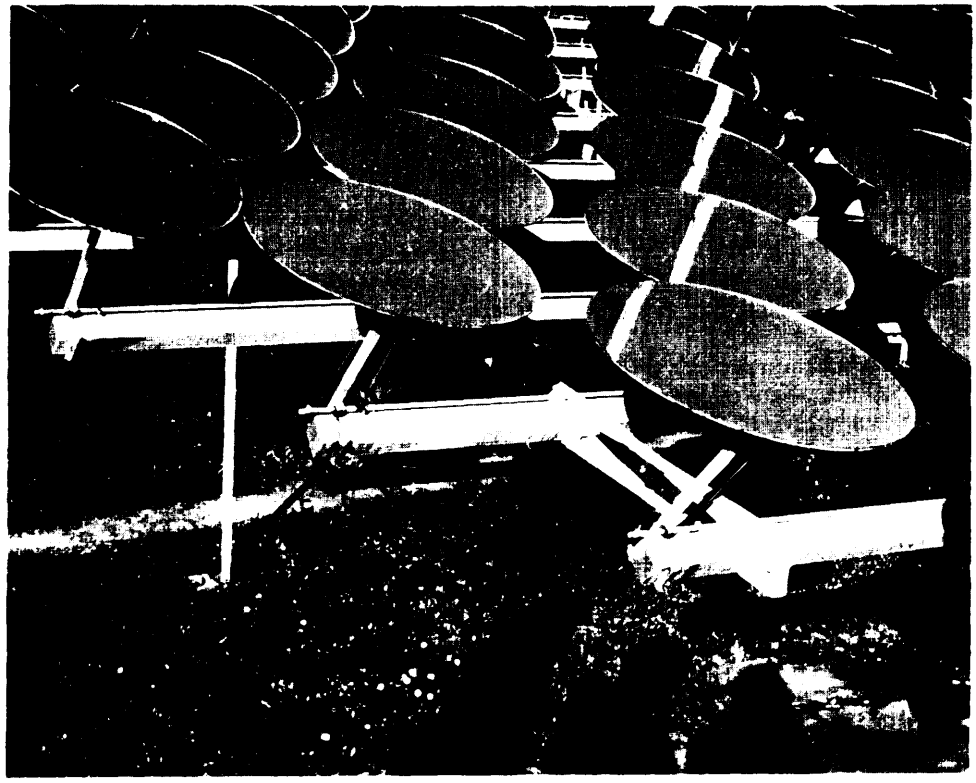

Photo by John Furber

a) Professor Francia's Solar Steam Generating Plant, Genoa, Italy.

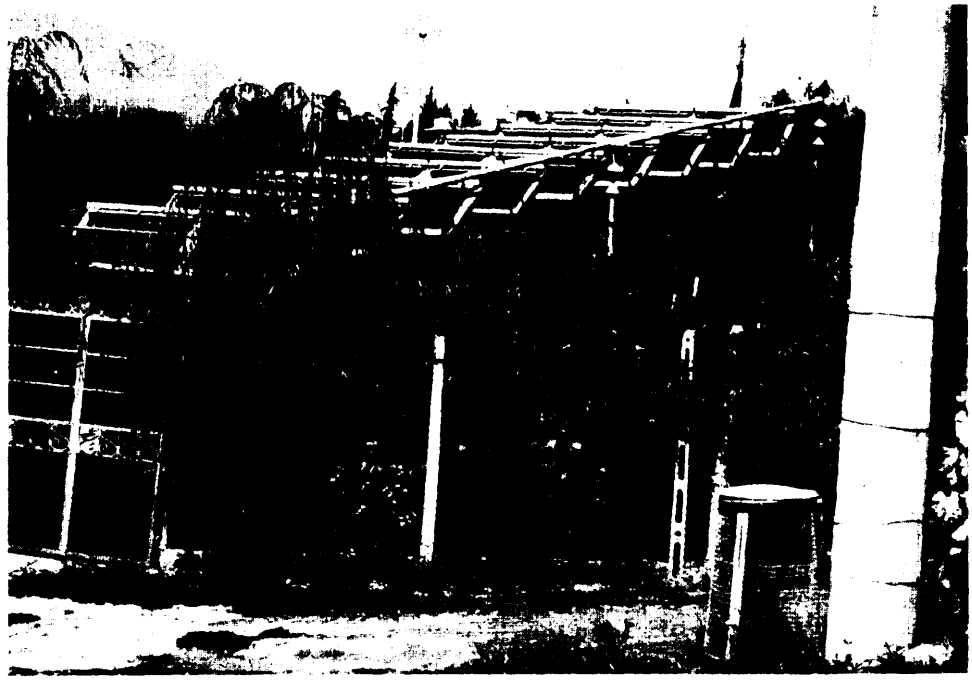

b) Flat-Plate Collectors at University della Calabria, Cosenza, Italy.

SOURCE G Francia, University of Genoa, Italy

deal of thought will have to be given to this issue i n some parts of the country and there may be no easy solution

THE ADVERSE ENVIRONMENTAL EFFECTS OF COLLECTOR FIELDS

If land must be cleared exclusively for use as collector fields, the effect o n the local environment could be very great I m pacts include the loss of existing buildings, the destruction of ecosystems, and the noise, dust, and disruption of the clearing activity. **If** the land were originally forested, the fundamental ecology of the region would be affected While it is possible for vegetation to grow under collector fields, so that some low plants and small animals could continue to Inhabit the area, the mixture of species would no doubt be very different from those which would have inhabited the region had it remained undisturbed Moreover the access roads required to maintain the collectors would disturb any new species which did inhabit the area. If the land were originally grassland or desert, however, the impact of the solar devices might be less, although it in no way could be considered negligible. Some change could be expected in local temperatures simply because the absorptivity of the region would be changed by the presence of the collectors. The effects caused by solar arrays, however, are no different from the changes which would occur from other types of development (e. g., with a parking lot or with a farm field). Any harm to a relatively undisturbed natural environment **in the immediate vicinity of populated areas must be considered to be particularly serious, because such areas are rapidly disappearing.**

LAND USED BY CONVENTIONAL GENERATING SYSTEMS

A conventional coal-fired electrical generating system requires land for mining, train lines to transport the coal, land for the generating facility, and land for transmission and distribution of power.

Table VI 1-12 indicates the amount of land which would be required for strip-mining coal and for transmitting power. Each square meter of strip-mined land in the Eastern United States yields enough coal to provide about 2,000 kWh of electric energy. A silicon photovoltaic array placed over the same square meter would need to operate

Table VII-12. —Land Required for Strip-Mining Coal

	Eastern strip mines		Western strip mines	
	1974	1985	1974	1985
Acres/year mined	57,348	69,704	7,140	16,330
kWh/m ^{2}.	2,150	2,144	5,744	10,627
Years of solar operation to provide equivalent power in the same land area:				
Albuquerque	14	14	38	69
Omaha.	22	22	60	111

Assumptions: — 29 percent efficiency of generating and transmitting electrlcity
— Silicon photovoltaic cells on non-tracking racks spaced to avoid shading (land coverage ratio = 52 percent in Albuquerque and 43 percent in Omaha),
— 12,000 Btu / lb coal
— Coal production statistics based on OTA forecasts.

between 14 and 22 years to provide an equivalent amount of energy. In the West, where thicker coal seams are found, a square meter of strip mine could provide between 6,000 and 10,000 kWh of power and a collector would need to operate 40 to 100 years in the same region to provide an equivalent amount of power.

Long distance electric transmission also requires a considerable amount of land. The Electric Power Research Institute estimates, for example, that by 1990 electric transmission lines will require a right-of-way of *2. I x 10 ^{10} m ^{2}* (about 220 billion ft^2). " If this area were covered with 10-percent efficient solar cells, about 4 x 10^{12} kWh (1 3.6 Quads) of electricity would be produced annually, It is possible to use the rights-of-way of transmission lines for purposes other than transmission — multiple land use is also possible with the solar equipment but somewhat more difficult and expensive to undertake.

Another interesting point of reference for the land use impact of solar equipment is the land covered by surfaced roads in the United States. There were about 5.9 x 10^{10} m^2 of such roads in the United States in 1975.17 Covering these surfaces with 10-percent efficient cells would produce 11.4 x 1 0^{12} kWh annually or 39 Quads. United States electricity consumption in 1976 was 2 x 10' ^{2} kWh or 6.8 Quads.

The direct comparisons of solar and conventional land use cannot be conclusive, These comparisons do not account for either the quality of the land impacted by the two types of systems or the fact that the impacts of onsite solar facilities are typically closer to populated areas than coal mines or larger transmission facilities. Land-use impacts in populated areas are generally more regulated by local zoning laws and by the public opinion associated with highly visible local activities, while activities in remote areas are generally exempt from regulation.

IMPACT ON BUILDING DESIGNS

BACKGROUND

Unlike conventional heating and cooling equipment, solar collectors mounted outside of the building can be highly visible. Concern about the appearance of solar installations and the effect of this appearance on the resale value of the property to which it is attached, may be a significant barrier to the near-term commercialization of onsite solar energy equipment. In a recent survey of lending institutions, 43 percent of the officials interviewed stated that concern about the "bulkiness or unusual appearance" of solar devices would be of some concern to them in evaluating a loan application for solar energy and 19 percent stated that this would be a "primary concern.'" [8]

The difficulty is traceable in part to the lack of examples of equipment on standard types of housing and to the fact that most publicized devices are either highly experimental (without great attention being paid to appearance) or are installed on expensive, custom-built homes. With some care, even buildings which are optimized for solar energy by having large roof areas with steep slopes, large south-facing windows, thick walls, and other special features, can be made attractive.

" EPRI Technical Assessment Guide, August 1977.

[17] Federal Highway Administration, Department of Highways, 1974. (Calculation assumes average surfaced road width is 40 feet)

[18] Regional and Urban Planning Implementation Inc, *financing the Solar Home: Understanding and Improving Mortgage Market Receptivity to* Energy *Conservation and Housing Innovation, June* 1976, **p.** *83*

integrating active and passive solar energy systems into building design will require some imaginative architecture and the results will depend on regional tastes. It is possible to design conventional buildings with solar energy devices with a minimal impact on building appearance (see figures VI I-6 and VI 1-7). Collector colors can be matched to root colors.

The feasibility of retrofitting existing homes with collectors as shown in the figures will depend on local conditions. Shading by improperly placed trees and other buildings present the most serious problems, and improper roof orientation or slopes could impair system efficiencies.

The roofs of standard buildings are not designed to optimize the efficiency of solar equipment. Roof pitches may be wrong, the roof area may be too small, the framing of the roof may be insufficient to support a collector, and the orientation of the structure may be incorrect. Table V **I 1-13** indicates the roof areas available in standard building designs, and the areas which can be provided with roof slopes at more optimum angles for solar collection. A number of imaginative designs have been developed durin$_g$

Figure VII-6– Techniques for Integrating Solar Collectors Into Conventional Designs for Single Family Residences

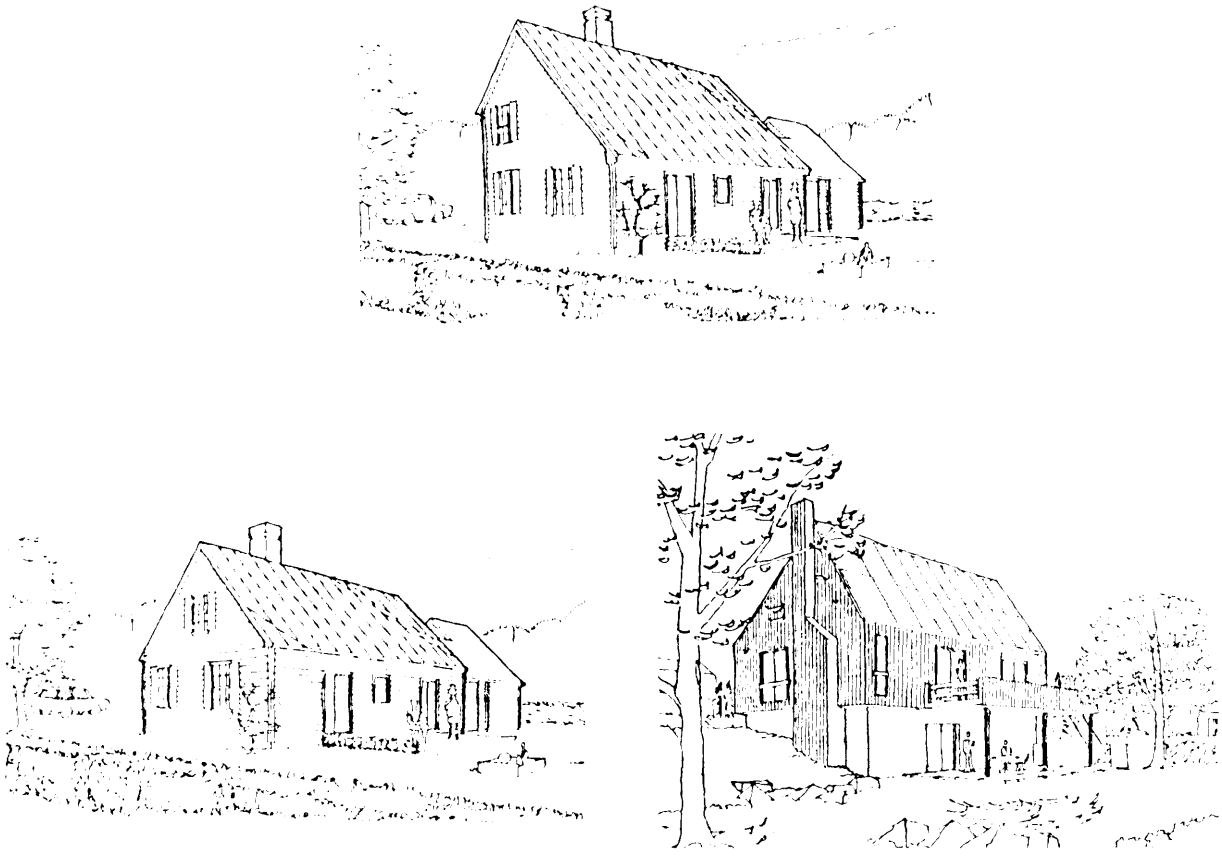

SOURCE Solar Dwelling Design Concepts op cit pp 79.83, 89

Figure VII-7– Techniques for Integrating Solar Collectors Into Conventional Designs for Townhouses and Low Rise Apartments

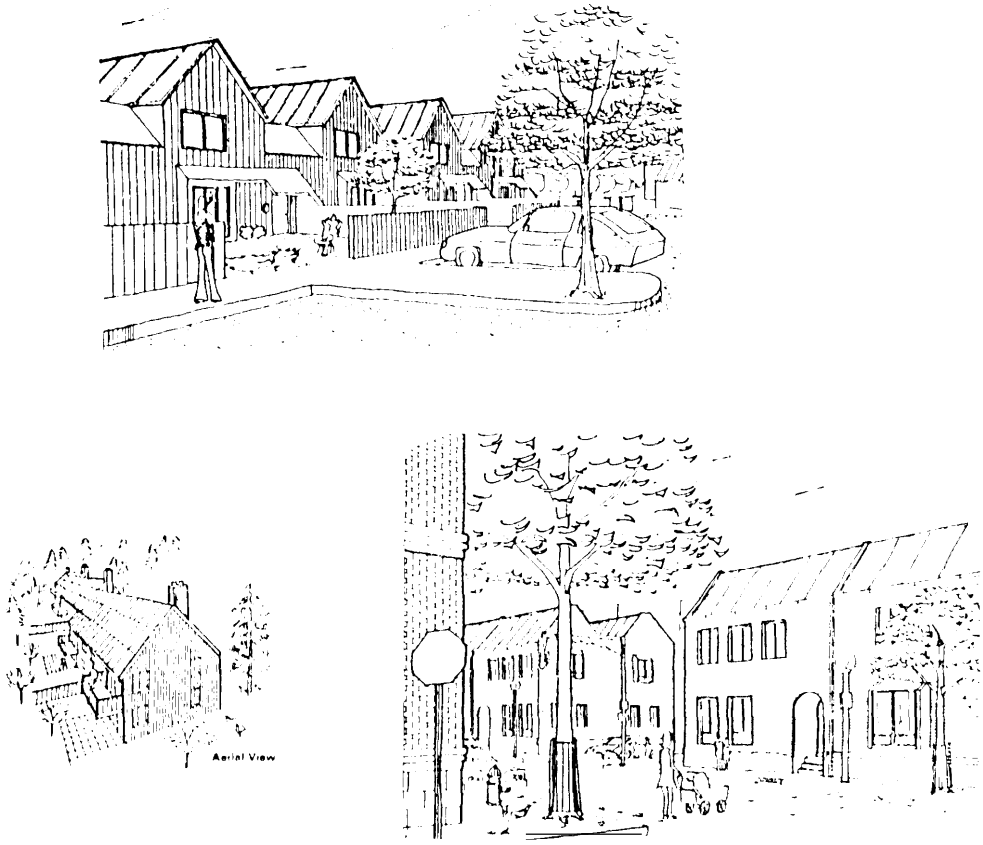

SOURCE Solar Dwelling Design Concepts op cit pp 91-93

the past few years which **can provide large** collector areas at proper orientations. Two such designs are illustrated in figures VI I-8 and VI I-9.

The less attractive collector systems, such as tracking collectors and rack-mounted flat plate collectors, can be shielded from ground view with simple screens around the building perimeter, but in some installations it will be clifficult to mask the systems completely. (See figure VI I-10). Screens would add to the cost, but would probably increase the reliability of tracking systems by also serving as wind screens. As society has apparently become accustomed to buildings with all manner of gadgetry on roof tops (vents, antennas, and air-conditioning cooling **towers), it would be difficult to argue that the addition of solar devices would seriously degrade the appearance of buildings.**

Wall collectors provide another means of increasing the collector area. Large, tall buildings, such as high-rise apartment buildings, are particularly well suited to wall collectors. Wall collectors generate about *75* percent of the energy that the same collector area would generate if tilted (in Omaha, Nebr.), so their use may be economical in some instances. Wall collectors, moreover, may not alter the appearance of some types of buildings, e.g. , glass-walled offices, **or** apartments (see figure V I 1-11)

Table VII-13.—Potential Areas for Collectors on Typical Buildings* (in square meters)

	Albuquerque	Boston	Ft. Worth	Omaha
Shopping **Center**				
Building Roof				
Horizontal roof area	28,800	28,800	28,800	28,800
Slanted racks on horizontal roof	15,261	12,171	16,520	12,626
Parking Lot				
Land area,	90,000	90,000	**90,000**	**90,000**
Slanted racks above cars	47,691	38,034	**51,624**	**39,456**
196-Unit high rise				
Building Roof				
Horizontal roof area	1,883	1,883	**1,883**	**1,883**
Slanted racks on horizontal roof	998	796	**1,080**	**826**
500/0 of southern wall.	1,500	1,500	**1,500**	**1,500**
Parking Lot				
Land area.	**7,840**	**7,840**	**7,840**	**7,840**
Slanted racks above cars	**4,154**	**3,313**	**4,497**	**3,437**
36-U nit low rise				
Building Roof				
Horizontal roof area	**1,270**	**1,270**	**1,270**	**1,270**
Slanted racks on horizontal roof	**674**	**537**	**729**	**557**
Parking Lot				
Land area.	**1,440**	**1,440**	**1,440**	**1,440**
Slanted racks above cars	**763**	**609**	**826**	**631**
8-Unit townhouse				
Building Roof				
Horizontal roof area .,	**620**	**620**	**620**	**620**
Roof slope at latitude	**756**	**837**	**731**	**824**
Typical roof slope	**327**	**327**	**327**	**327**
Slanted racks on horizontal roof	**328**	**262**	**356**	**620**
Parking Lot				
Land area, .,	**320**	**320**	**320**	**320**
Slanted racks above cars	**170**	**135**	**184**	**140**
Single family house				
Building Roof				
Horizontal roof area	**83**	**83**	**83**	**83**
Roof slope at latitude	**101**	**112**	**98**	**111**
Typical roof slope	**44**	**44**	**44**	**44**
Slanted racks on horizontal root.	**44**	**35**	**48**	**36**
Carport				
Horizontal roof area .,	**28**	**28**	**28**	**28**
Roof slope at latitude	**34**	**38**	**33**	**37**
Slanted racks on horizontal roof	**15**	**12**	**16**	**12**

*See volume II, chapter IV for a detailed description of the buildings

Figure VI I-8.—A Residential Building With Optimized Solar Roof Pitch and Orientation



PHOTO: Reprinted from *Popular Science* with permission 1976 Times Mirror Magazines, Inc

ROOF PITCH AND ORIENTATION

Table VI 1-14 indicates how the energy collected by flat-plate collectors varies as a function of the angle of the roof and orientation of the building. It indicates the "useful" output of thermal collectors (e.g., the output which is actually applied to heating space and water), the total thermal output (which includes thermal **energy which must be discarded because the storage is filled), and the electric output which** could be provided by a flat-plate silicon photovoltaic **array**. In all three cases, the direct output is shown and the results are normalized for comparison with the optimum roof design.

The useful thermal output for heating and hot water is optimized when the roof in Omaha is sloped at an angle of 560 (which is 150 greater than the latitude), and the collector is oriented due south. If the collector faces south but is tilted at an angle more typical of residential roofs (a drop of 4 feet in a run of 12 feet) the performance would be reduced **by 18 percent or, equivalently, the amount of collector area required** for an equivalent output would need to be increased by 22 percent. **If** the house with a collector tilted at the latitude angle (4 I 0, were **oriented** due west instead of south, the energy received would be reduced by 11 percent. If both effects were combined in a

Figure VII-9.—A Commercial Building Designed To Optimize Roof Pitch and Orientation



PHOTO Courtesy of J Bayless, President, Solaron Corporation, 1976

''worst possible house for solar cillection, " and a house with a standard **"4/12" slope were** facing due west, the energy received per unit collector area would be reduced *39* percent **or** the required collector area would be Increased by 64 percent. [Even a house with a collector on a horizontal roof would receive more energy.) A number of other combinations of roof pitches and building orientations are shown for comparison.

The output of photovoltaic devices is much less sensltive to the roof orientation, A south-facing roof tilted at the "4/12" slope would receive 98 percent of the energy received by a house tilted at an optimum ingle. A west-facing wall would receive 49 ercent of the energy of the optimized ystem, the 'worst-case'' house roof 86 per-ent.

This analysis indicates that a large fraction of existing buildings could be retrofitted with solar systems without either a major sacrifice in system efficiency or alterations in the roof lines. It also means that architects have considerable latitude in designing solar structures; deviating from optimum orientations will increase the cost of collector systems, but designers may feel that this added cost is justified if it allows a more attractive building plan, if it improves the orientation of the building with respect to scenery, or if it reduces the overall construction cost of the building.

SPACE FOR STORAGE

Storage Tanks

The size of required heat storage tanks varies with the type of storage sought: over-

Figure VII-10—A Proposed Installation for a One-Axis Tracking Collector

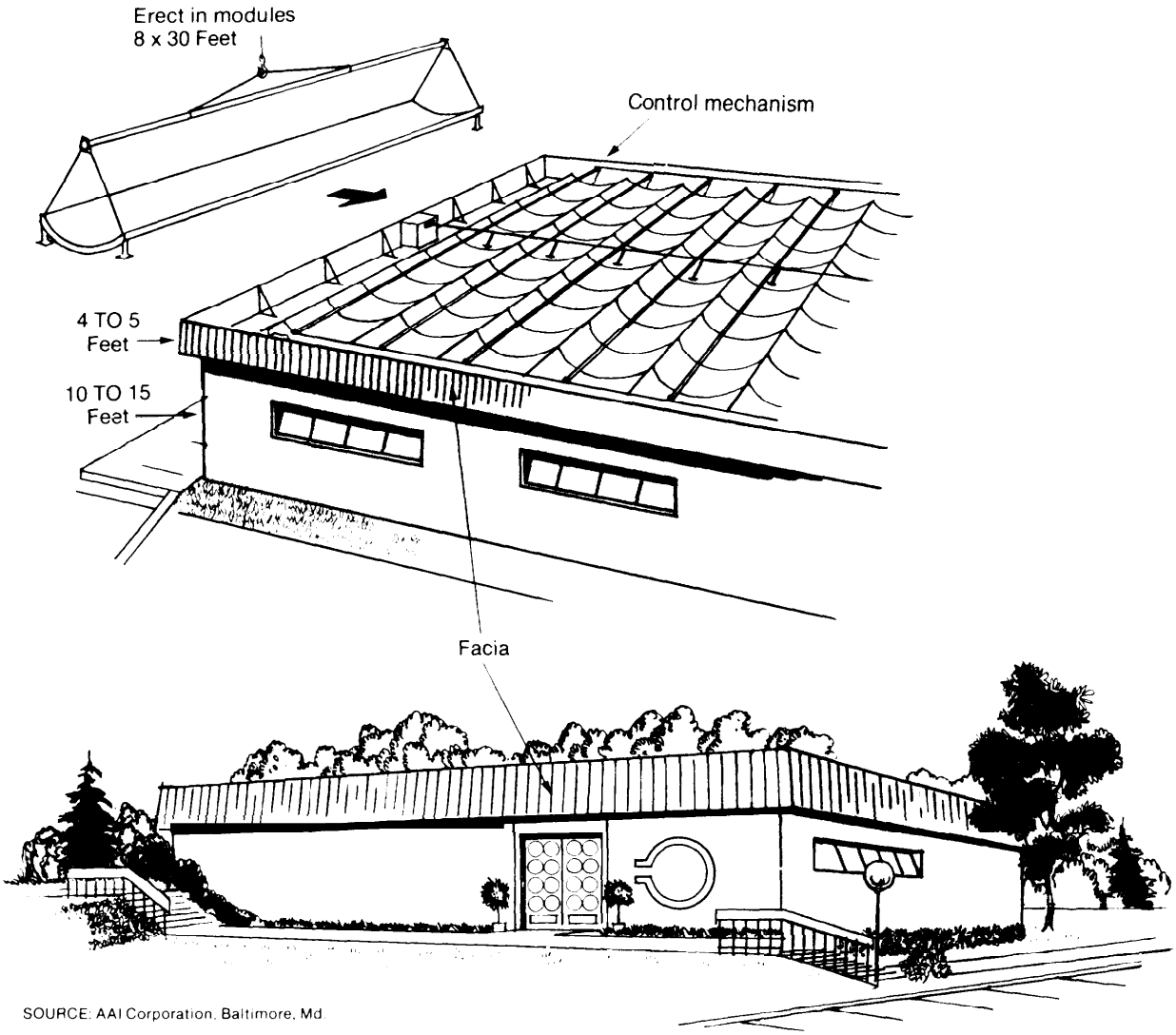

SOURCE: AAI Corporation, Baltimore, Md.

night storage, backup capacity for 2 or 3 days to allow for cloudy weather, or seasonal storage. For overnight heating and hot water needs (assuming an average house in Omaha on a typical winter day), a 500 to 1,000 gallon water tank is sufficient, For 2 to 3 days storage, that capacity would have to be doubled or tripled; seasonal storage would require a 50,000 gal lon tank,

For the 196-unit apartment building (again using the needs on a typical winter day in Omaha), overnight storage would require a 25,000 to 50,000 gallon tank; 2 or 3 day storage capacity would be twice or three times that, and seasonal storage would require a 3 to 6 m i l l ion gallon tank

All but the smallest of these tanks would probably be buried close to building sites, thus minimizing land and building space requirements. In the case of new housing, it might be more practical to bury the tank directly under the basement of the house, creating a sort of sub-basement. On most sites, there should be adequate space for

Figure VI I-1 1 .—Use of Collectors on the Vertical Wall of a High Rise Hotel

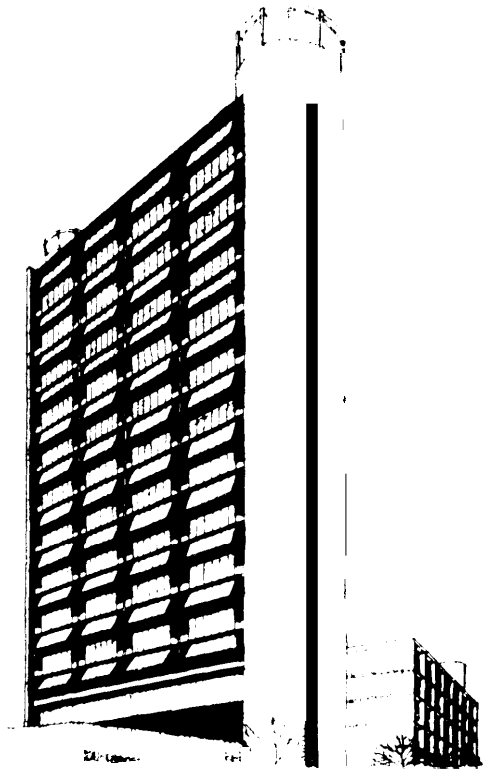

SOURCE The Radisson Hotel Corporation St Paul Minn expected operational date September 1978

even the largest tanks The huge tanks required for seasonal storage i n apartments, for example, could be buried in an area covering less than half the area of the apartment's parking lot.

A number of storage media other than water are available: oils, salt cornpounds, organics, and concentrated solutions. The alternate fluids have the advantage of requiring less volume and hence less storage space, but the disadvantage of greater expense, flammability, or the requirement of separate specially constructed tanks must be considered Since the tank is buried, its size is not an aesthetic factor, and water tanks are probably the most practical for the residential and commercial applications discussed here.

Electrical Storage Devices

Advanced collector systems may produce electrical energy for a residential or commercial building as well as thermal energy, and onsite storage of electrical energy in batteries may be a necessary component of such systems.

The space required by the batteries is, by itself, not a major concern. Lead-acid batteries require about 1 cubic foot of space for each kWh of storage capacity Thus, 20 kWh of storage capacity would require 20 cubic feet of space, most likely in the basement of the home (less than a 3-toot cube). A bank of batteries with this capacity would be dangerous, particularly in residential uses where children are present, and should be stored in a locked room or cage of some

Table VI.14.—Thermal and Electric Outputs of Flat-Plate Collectors in Omaha, Nebr., as a Function of Tilt Angles (with respect to horizontal) and Orientation (with respect to south)

Orientation	Annual thermal output of collector (kWh/m^2)	Ratio of thermal output to thermal output at optimum collector orientation	Annual thermal output usable for heating and hot water (kWh/m^2)	Ratio of useful thermal output to useful thermal output of collector at optimum orientation	Annual electric output of silicon photovoltaic cells (kWh/m^2)	Ratio of electric output to output at optimum collector orientation	Electric output in December (kW1m^2)	Electric output in June (kWh/m^2)
South Tilt = Lat + 15°	590	.91	410	1.00				
South Tilt = Lat	643	.99	399	.97	226	.99	14.6	21.3
South Tilt = Lat -10°	647	1.00	378	.92	228	1.00	13.6	22.6
South Tilt = Lat -23° (4/12 roof slope)	613	.95	335	.82	224	.98	11.9	23.7
Tilt = Lat	598	.92	364	.89	216	.95	13.2	21.3
Tilt = Lat -23° (4/12 roof slope)	470	.73	249	.61	195	.86	8.1	23.1
Horizontal	502	.78	260	.63	205	.90	8.7	24.0
S. Vertical	326	.50	324	.79	127	.56	6.3	13.8
W. Vertical	169	.26	158	.39	112	.49	5.0	13.0

Assumptions:
- — **thermal output computed assuming a tubular flat plate (operating characteristics of the collector assumed in the analysis are shown in volume II chapter IV).**
- — **useful output of the collector was computed assuming that a heating and hot water system with 40** m^2 of collectors is used in connection with 1,000 gal of hot water storage and serves the typical single family house whose characteristics are outlined in volume II, chapter IV. Electric resistance heating and electric hot water heaters were assumed to provide needed backup.
- — the photovoltaic system analyzed was a passively cooled silicon system with a cell efficiency of 0.14 at 28° C and a heat removal factor (K_e) of 0,025 kW/m^2-"C.
- — the results are integrated over a full year.

SOURCE: Prepared by OTA.

sort. The 196-unit apartment building would need a I most 3,000 kWh of electrical storage for one day's needs (about a 15-foot cube).

In addititon to the security needed for a large array of high-yield batteries, the system should be vented to protect against the buildup of potentially explosive hydrogen and the toxicity of other gases which are by-products of lead-acid battery use (see chapter XI, Impacts on the Environment section)

OTHER BUILDING IMPACTS

Onsite energy systems will undoubtedly require more interior building space than conventional heating and cooling systems. Even the simplest hot water systems require space for pumps, controls, and larger hot water tanks. More complex heating systems will require larger tanks as well as additional pumps, controlled valves, and heat exchangers. While the tanks can be buried outside the building, space will be required for the supporting equipment. In most cases the space needs will be minimal.

More complex systems using heat engines would require substantially more space, either in the building or in sheds close to the building served, A solar heat engine large enough to operate an air-conditioning system, for example, would be approximately as large as the air-conditioner which it operates An engine providing electricity as well as air-conditioning would be even larger. Space requirements within buildings could present serious difficulties **in these cases.**

Chapter VIII
COLLECTORS

Chapter VIII.–COLLECTORS

Page

Background 245
Major Design Considerations , ... 246
Tracking Versus Nontracking Systems. 246
Installation. 248
Working Fluid.. 249
Survival in Adverse Conditions 249

Surveyof Collector Designs. 250
"Passive'' Systems 250
Siting 250
Basic Architectural Considerations 251

Stationary Flat-Plate Collectors. 255
Pond Collectors. . :. 257
Flat-PlateCollectorsAssembled Onsite. .259
Factory-Assembled Modular Collectors. .259

Tubular Solar Collectors. 261

Concentrating Collectors. 261
Nontracking Concentrating Systems 26l
ActiveTracking and Concentrating Systems 264

Environmental Impacts. 284
Working Fluids. 284
Manufacturing Hazards 284

Collector Costs 285
FOB Collector Prices 285
Collector Summary Tables. 285

Collector Performance 287
The Energy Available for Collection 289
The Solar Resource. 291

CollectorTracking Geometry. 295
Collector Losses 295
Optical Losses.. 295
Thermal Losses... 298
The Significance of the Loss Factors 298

The Net Performance of Collectors. 300

AppendixVlll=A.-Techniques Used to Compute the Output of Representative Collector Designs 303

LIST OF TABLES

Table No, Page

1. Degradation in the Performance of Flat-Plate PhotovoltaicArrays Located in Cleveland, Ohio, September-December 1975....248
2. SiteOrientation Chart. 251
3. Characteristics of Competing Designs for the 10MWeSolarCentral Receiver Powerplant. 280
4. Stationary Flat-PlateCollectors. 286
5. Foreign StationaryCollectors on U.S. Market 286
6. StationaryTubularand CPC Collectors ...287
7. One-AxisTracking Collectors 288
8. Two-AxisTracking Collectors 289
9. Assumed CoilectorInstallation Costs for VariousCollectorConfigurations, ExcludingOverheadand Profit 290
10. Useful Radiation Incidenton Flat-Plateand FullyTracking Concentrating Collectors, FourCities, in kWh/m^2/year 298
11 CollectorCharacteristicsAssumed in Preparing FigureVIII-39 299
12 Comparison of the AnnualOutput of Five CollectorDesigns, in kWh/m^2/year. 301
13 Output of SingleCoverand DoubleCover Pond Coilectors for Various Operating Conditions 301
A-1. Empirically Derived Constants Used in the FormulaforEstimating Direct Normal Radiation,Given Measurements of Total Horizontal Radiation.. 304
A-2. Comparison of 1962 Weather With Long-Term Averages and Extremes 304
A-3. Glossary of Symbols Used in Computing Collector Geometry, ... 306
A-4. Coefficients of the Fourier Expansion of the Equation of Time Used in Equation A-15. 309

LIST OF TABLES—continued

Table No. *Page*

A-5. Transmittance of Transparent Covering Materials Which May be Used in Solar Collectors. 311
A-6. Specular Reflectivities 313
A-7. Maximum Possible Geometric Concentration Ratios at Perihelion. 320
A-8. Maximum Possible Geometric Concentration Ratios 320
A-9. Typical Thermal Loss Coefficients 322
A-10. Ratio of Collector Output When Average U-Value Used to Output of Collector With Variable U-Value for Flat-Plate Collectors in Omaha With Tilt Angle—Latitude. 323

LIST OF FIGURES

Figure No. *Page*

1. A Sample Site Plan Illustrating Techniques for Minimizing Heating and Cooling Requirements 252
2. The Operation of the Trombe-Wall Collector/Storage System 254
3. A House Using a Trombe-Wall Collector Located in Eastern Maryland 254
4. The Temperature Averaging Effects of Masonry Wails of Various Thickness 255
5. Typical Home With Solar Water Heating Using Flat-Plate Collectors 256
6. Cross-Section of a Typical Modular Flat-Plate Solar Collector. 257
7a. Pond Collector With a Rigid Cover 257
7b. Cross-Section of a Combined Pond Coilector/Thermal Storage Pond Using an inflated Cover. 258
8. Typical Air Collector Installation 260
9. Various Tubular Collector Designs. 262
10. Fiat-Plate Collectors With Stationary Boosters 263
11. One-Axis Compound Parabolic Collector. .264
12. Albuquerque-Western Tracking Collectors installed on Modular Home 265
13. Acurex Parabolic Trough 266
14. Beam Engineering Parabolic Trough on a Polar Mount 267
15. (a) The Linear Fresnel Lens and the Absorber Tube are Both Visible in This Cross-Sectional End-View of the Northrup Concentrating Collector. (b) Array of Northrup Collectors is Mounted for Polar Tracking 268
16. Receiver Pipe inside McDonnell Dougias Prototype Linear Fresnel Lens Concentrator. . . . . .. .268
17. General Atomic Distributed Cllector Concept 269
18. Russell Collector by Scientific-Atlanta, inc., Installed at Georgia institute of Technology 269
19. ITEK Distributed Collector Concept With Inset Showing the High-Performance Receiver Design. 270
20 The Varian Two-Axis Concentrator Using GaAs Photovoltaic Devices 272
21 An MIT Design for a Small Two-Axis Tracking Unit 273
22 Sales Price of Cast-Acrylic Fresnel Lens Versus Production Volume 274
23, 1 kW_e Focusing Photovoltaic Test Bed & Sandia Laboratories, Albuquerque. l-Square Foot Fresnel Lenses Focus on 2-inch Diameter Solar Cells 275
24. RCA's 300W_e Photovoltaic Concentrator. .276
25. JPL Paraboloid Design With Stirling Engine at Collector Focus. 276
26. Sunpower Systems Solar Powerplant. 277
27. Francia 100 kW_t Solar Powerplant. 278
28. Mitsubishi (7 kW_t) Heliostat/ Receiver Test Bed 279
29, Pilot Plant Heliostat Concepts. 281
Pilot Plant Receiver Concepts. 282
30. McDonnell Douglas 10-MW Pilot Plant Design. 282
32. The 5-MW Central Receiver Demonstration Under Construction in Albuquerque, N. Mex.. 283
33. Cross-Section of Stationary Hemisphere Concentrator 283
34. Variation of Direct Normal Component of Solar Radiation With Time 292
35. Mean Daily Total-Horizontal Solar Radiation (kWh/m^2) 293
36. Mean Daily Direct-Normal Solar Radiation (kWh/m^2). . . . . ., ...294
37. Perfect Fiat-Plate Collector Tilted at Latitude Angle and a Perfect Fully Tracking Collector. . . . . .. .296
38. Comparison of the Maximum Energy Collectable by Four Types of Collectors Located in Albuquerque (1962 Radiation Data) 297
39. Energy Balance for Five Collector Designs 299
A-1. Collector Coordinates Showing the Collector Direction 305
A-2. The Geocentric and Collector Coordinates Showing Direction of Sun. 306
A-3. The Specular Reflectance at 500 nm as a Function of the Collection Angular Aperture for Several Reflector Materials 312
A-4. Monthly/Hourly Variation in Available Thermal Power...;. 315
A-5. The Solar image on Three Typical Concentrating Collectors. 317
A-6. Characteristics of the image of Acrylic Fresnel Lenses Designed by Swedlow Inc. for Solar Applications. 318
A-7. Geometry of a Simple Flat-Plate Collector. 324

Chapter VIII
Collectors

BACKGROUND

This chapter reviews the diverse assortment of techniques which can be used to collect sunlight on receiving surfaces. Technologies for converting the energy collected into mechanical or electrical energy are examined in chapters IX and X.

Solar collectors are the only components of solar energy systems which are unique; all other parts of the systems—heat engines, storage devices, and the like—have a history of use in other applications. Collectors can, however, be relatively simple devices and have much in common with other types of heat exchangers. A variety of design approaches are possible using well-established technology. The major problem is reducing the cost of the devices with innovative designs or mass production techniques. Low-cost collectors are critically important to the future of solar energy since collector costs dominate the cost of solar energy in almost all systems.

Evaluating collectors at this stage in the history of the technology is an extremely treacherous undertaking. The field is changing at a bewildering rate and it is much too early to be dogmatic about the outcome. Since collector designs can be perfected without the need for sophisticated development laboratories, a large number of inventors have entered the field and an incredible variety of approaches have been proposed. Concepts have come from home inventors, university laboratories, and small manufacturing concerns, as well as large Government and corporate development laboratories. Many of these new ideas will never reach the marketplace and many that do will not survive the intense competition which is beginning to take place. There are presently about 200 independent organizations in the United States with a collector on the market.

Many interesting designs have never been produced commercially and many of the designs which have reached the market have been available for such a short time that their long-term performance cannot be accurately evaluated. In particular, few systems have been tested extensively in adverse weather conditions. Moreover, many contemporary collector manufacturers are small firms which are unable to make reliable estimates of a selling price which can sustain the overhead and marketing costs of their concerns—several companies have failed in the past year. As a result, the claims made by many manufacturers of inexpensive devices must at this point be treated with great caution.

Uncertainty about the reliability and performance of collectors may be alleviated to a considerable extent when consensus standards are developed by the industry **for testing collectors and when testing laboratories are certified** for conducting the needed tests. (This uncertainty about system quality is a major problem for consumers and is discussed more extensively in chapter I I 1, *Policy Analysis.]*

In **almost all cases, forecasts of the future price of collectors are based on estimates of potential mass production and are not based on a detailed analysis of specific manufacturing** processes, I n fact, the price of many of the products now on *the* market is unlikely to fall dramatically with mass production–the cost of materials already represents a significant fraction of the total cost of some devices. Significant price re-

ductions are more likely to result from the development of innovative designs.

In spite of the uncertainties, collector production is increasing rapidly. Manufacturers reported production of 426,000 m^2 of collectors during the first half of 1977 (4.5 million square feet), of which about 250,000 m^2 were low-temperature devices designed primarily for heating swimming pools. Sales have been increasing by more than so percent every 6 months. Collector sales were expected to amount to over $100 million during 1977.

MAJOR DESIGN CONSIDERATIONS

The enormous variety makes the selection of an optimum collector design a complex decision. The choice can only be made by analyzing the space available for collectors on building roofs or in landscaping around buildings, the local climate (including the availability of direct and indirect sunlight), and the compatibility of the collector output with storage equipment, engines, and other elements of the solar energy system. Clearly, no single design will be optimum for all applications in all climates. The following discussion reviews some of the major **variables which must be considered in selecting a collector.**

TRACKING VERSUS NONTRACKING SYSTEMS

The vast majority of the collectors now on the market do not follow or "track" the Sun or concentrate sunlight with an optical system, but are "flat-plate" systems rigidly fixed to rooftops or frames in fields. This kind of collector has the advantage of simplicity and reliability, and can be integrated into building designs with relative ease.

If sufficient land is available and large quantities of low-temperature (500 to 90° C) thermal energy are required, shallow pond collectors, which use the earth for much of their support, will almost certainly provide the lowest cost solar energy. Nonfocusing collectors are also uniquely able to make use of diffuse sunlight reflected from the atmosphere and the ground. (Some diffuse solar energy can be collected by concentrators which magnify the Sun's intensity only 2 to 3 times,) Flat-plate collectors are not able to provide temperatures high enough to operate most kinds of heat engines, however, and cannot be used to provide high-temperature process heat. (A heat engine which can operate from the temperatures produced by flat-plate devices is discussed in chapter IX, *Energy Conversion With Heat Engines.)*

Some types of flat-plate collectors may cost more per unit of aperture than tracking devices. This is because flat-plate units require a considerable amount of material for each unit of collector area —the entire area must be covered by an absorber surface, insulation, and one or two layers of glass or plastic. The large heated area also means that thermal losses for flat-plate devices are generally larger than those of systems which concentrate sunlight, even though the concentrating systems typically operate at higher temperatures,

Systems which track the Sun and concentrate sunlight are able to produce the high temperatures needed to operate efficient heat engines or can be used to reduce the area of photovoltaic cells needed for electricity production. Their use with solar cells is important if the cost per unit area of the tracking collector is significantly cheaper than the unit area cell costs, and if the tracking device allows the use of a high-efficiency cell. This is discussed in greater detail in later sections.

Although most concentrating collectors now on the market cost considerably more than flat-plate devices, it may eventually be possible to build concentrating devices which cost no more (perhaps less) than standard flat-plate systems since most of the area of concentrating collectors is covered only with a thin layer of reflective surface or

[1]Stoll, R. (DOE) *Solar Collector Manufacturing Activity,* November 1977

lens material. The inability to utilize diffuse sunlight is compensated for, to a large extent, by the fact that tracking devices can maintain a better angle to the Sun than stationary systems.

Systems have been proposed which concentrate sunlight without tracking — examples are simple stationary reflectors placed between tilted flat-plate collectors and the "compound parabolic concentrator" under development at the Argonne National Laboratory; and systems have been proposed in which flat-plate collectors track the Sun without concentrating sunlight. In most cases, however, tracking and concentration are used together.

Tracking collectors can be conveniently divided into two general categories depending on whether they track the Sun by tilting around one or two axes. The one-axis tracking systems are typically shaped like long troughs which swing about the trough's long axis. These troughs cannot keep the receiver aperture perpendicular to the Sun's direction, but provide better Sun angles than a fixed device. One-axis systems typically are used to magnify the Sun less than 50 times and are not used to provide temperatures above **3500 C (660 °F); some simple,** inexpensive systems are designed to produce fluids at650 to 1200C(1500 to 2500 F).

The advantages of concentrating collectors are counterbalanced by the added costs of maintaining the optical surfaces and moving components, and by the cost of the tracking unit itself. The tracking systems need not be very expensive since a single tracker can be used to drive a large array of collectors and wear on the moving parts will be minimal since a collector will rotate only 11,000 times in 30 years. Maintenance of the optical surfaces is likely to be the largest problem. Optical losses can be a dominant factor in the overall efficiency of concentrating collectors (the relatively poor optical efficiency of some concentrating collectors tends to offset their relatively good thermal efficiency), and these losses can be significantly increased if dirt or scratches accumulate on mirror or lens surfaces.

Dirt can scatter light and therefore interferes with the ability of the optical devices to focus light even when the amount of light absorbed by the dust is not important. Recent experience at Sandia Laboratories has indicated that the specular reflectivity of tracking mirrors can be reduced by as much as 15 percent in poor locations if the mirrors are not washed during a year. The effect is very sensitive to the location of the collectors since precipitation can reduce dust accumulation but no data is available on this problem in most locations. Table VII I-I indicates the degradation in the performance of flat-plate photovoltaic collectors. It can be seen that the effect of dirt depends strongly on the cover material and the operating environment. The degradation of performance apparently is quite rapid during the first 3 months, but levels off quickly. Performance at 9 months is not much worse than performance at 3 months.[2] A relatively simple hose-down once or twice a year may be sufficient for most cleaning requirements. [3] Larger collector arrays may require specially designed equipment to facilitate cleaning collectors.

The timing of cleaning cycles will depend on a detailed comparison of the cost of alternative cleaning schedules and the cost of energy lost because of the dirt which can accumulate as a result of each schedule. Unfortunately, most types of tracking devices have not operated long enough to allow the collection of adequate information about the degradation of performance over time. Cleaning is, of course, also important for flat-plate collectors, but tends not to be as critical a factor in their performance since a significant fraction of the light scattered by dirt can still be captured by a flat-plate absorber.

Wind loads present a particularly serious problem for tracking collectors since they can act like sails and much of the cost of tracking devices results from the need to

2A. F. Forestieri, NASA Lewis Research Center, private communication, November 1977

[3]Rosco Champion (Sandia Laboratories), private communication, February 1977

Table VIII-1.— Degradation in the Performance of Flat-Plate Photovoltaic Arrays Located in Cleveland, Ohio, September-December 1975

	Heavy industrial environment		Suburban environment	
	81 days	250 days	74 days	250 days
Arrays not cleaned				
Cells encapsulated in glass	-5.7		+ 1.8	
Cells encapsulated in silicone rubber (average of three products tested)	-32	~-30	-9	
Performance after arrays scrubbed with a detergent solution				
Cells encapsulated in glass.	+ 1.8		0	
Cells encapsulated in silicone rubber (average of three products tested)	-7	~ -12	-2	-6 to -10

NOTE: Measurement error was - ±2%, so + 1.8% means only that no measurable degradation had occurred

SOURCE Forestieri, A F "Results of Outdoor Real Time and Accelerated Testing" presented at ERDA National Photovoltaic Program Review, Silicon Technology Program Branch, San Diego, Calif, Jan 18, 1977 (p 230)
Forestieri, A F private communication, November 1977

build massive supporting structures capable of withstanding high winds. A clever technique for reducing such costs would be a welcome innovation.

Another potential problem with tracking systems is the difficulty of integrating the devices aesthetically into the architecture of a building; many of the experimental tracking systems are far from attractive. The architectural problem of integrating tracking systems gracefully into a building, however, has not been adequately examined.

Finally, it can be difficult to design reliable couplings to carry very hot fluids from a moving receiver. Several approaches are possible. For temperatures below boiling, a flexible radiator hose may be adequate, although occasional replacements may be necessary. For temperatures of 4000 to 6000 F, rubberized braided-steel hose can be used. For higher temperatures, stainless steel accordian bellows can be used. These are commonly used to allow for expansion and contraction in industrial pipes which must carry very hot or very cold fluids or steam. The reliability of each approach can only be established with careful testing.

INSTALLATION

The cost of installing collectors is an important and often overlooked component of the cost of a solar system. The relatively straightforward plumbing, carpentry, and electrical work associated with installing collectors can represent more than half of the installed cost of a collector system. These costs tend to be significantly higher in the case of devices retrofitted onto existing structures.

It may be possible to integrate collectors into the walls or roofs of new buildings in a way that can lead to some savings in building materials and insulation. Plumbing and wiring costs can be minimized with careful building designs. Some additional construction costs may be incurred if heavy collectors or collectors subject to high wind loads must be supported by the building.

Collector systems **which are not attached to buildings incur the additional cost of land-grading, concrete foundations, and the cost of purchasing needed land. In many cases, the land cost can be eliminated by mounting collectors over parking lots or other areas where the** collectors will not interfere with use.

The problem of installation costs has not received the attention which this issue merits.

WORKING FLUID

A variety of fluids can be used to convey the energy from a solar collector to the site where the energy is needed or into storage. At low temperatures, the prime candidates are air, water and mixtures of water, and antifreeze. (Pure water cannot be used in colder climates unless the system is designed to drain completely during cold, sunless periods or the collector is made from flexible plastics or other materials which are not damaged by expansion.)

Air collectors have the advantage of avoiding the problem of freezing altogether, and are not affected by the corrosion which can result from untreated water. Air can be heated to temperatures above boiling without producing excessive pressures, and leaks in air collectors do not lead to building damage. Air collector heating systems can use inexpensive rock beds for heat storage, thus eliminating the inefficiencies, temperature drops, and costs associated with heat exchangers. However, the relatively low density and specific heat of air (compared to water) means that the collectors, storage, and heat transfer systems must be considerably bulkier than the liqu id systems.

Water can also be used as the working fluid in high-temperature systems, but pressurized systems can be expensive, especially if steam must pass through rotating joints or be transported over long distances. A variety of heat transfer fluids have been developed for chemical processing which can be used to transport heat from solar collectors, although there are disadvantages associated with their use. These fluids can be costly, some are flammable, and others degrade with continued thermal cycling. The use of helium gas has been proposed for use in the receivers of very high-temperature collector systems.

If an efficient and inexpensive chemical process can be developed which either converts light directly into chemical energy (photochemical reactions) or which uses thermal energy to drive a chemical reaction (thermochemical reactions), it may be possible to pump the appropriate chemicals directly into collectors to produce a higher energy material which can be stored for later use.

SURVIVAL IN ADVERSE CONDITIONS

A collector system should be able to withstand strong wind and hail, and should be able to operate after snowstorms. Some tracking collectors are designed to protect themselves from inclement weather by turning the vulnerable surfaces down toward the building or the ground.

Another factor which must be considered is the collector's ability to survive a failure of the pump control systems or plumbing which prevents the working fluid from carrying heat away from the collectors. If fluid flow stops, the temperature of even simple collectors can reach 1000 to 1500 C (the so-called "stagnation temperature" of the collector). These temperatures can melt critical components of poorly designed systems or cause expensive damage in other ways. The collector performance and certification tests designed by the National Bureau of Standards will include a test of the performance of the collector after it has operated without cooling fluids for some length of time.

SURVEY OF COLLECTOR DESIGNS

The following section examines a representative set of solar collectors. Some of these devices are on the market and some remain in the laboratory, but an attempt has been made to represent each generic category. The selection of particular collectors as examples does not imply any judgment about their performance relative to other devices, nor is the survey intended to provide a comprehensive listing of all available designs. Extensive catalogs of solar collectors have been published by the Energy Research and Development Administration (ERDA),[4] the House Subcommittee on Energy Research, Development, and Demonstration,[5] and the Solar Energy Industries Association.[6]

"PASSIVE" SYSTEMS

The heating and cooling requirements of buildings can be reduced if care is taken in the design of the building and the choice of a building site. With imaginative planning, most of the options should not add substantially to the cost or detract from the appearance of structures. At some added cost, new **buildings can be designed with more elaborate structural features (such as large south-facing windows and thick walls) which can further reduce heating and cooling requirements.** These features are all commonly categorized as "passive solar" collection systems since they typically have no moving parts.

Passive systems are extremely attractive because of their simplicity, very low initial cost, and freedom from maintenance costs.

Many of the more sophisticated passive solar designs are only applicable to new construction since they affect the basic design of the building; many simple changes, such as the addition of awnings, shutters, and lean-to greenhouses can be retrofit on existing structures. Temperature control can also be difficult with some systems.

Siting

A wise decision about building placement should take into account local topography, sun angles, trees and other vegetation, ground water, precipitation patterns, and other aspects of the local climate and geography. There cannot be a simple, all-inclusive formula for resolving these issues because each decision must be made on the basis of specific site conditions. Table VI II-2 indicates some of the basic elements of building siting decisions for four different climatic regions, and figure VII I-I gives an example of an efficient siting plan developed by the AIA Research Corporation. The following features were used in developing the plan:[7]

- The use of windbreak planting;
- The orientation of road alinement with planting on either side to channel summer breezes;
- The location of units in a configuration suggested by the topography;
- The use of the garage to buffer the dwelling from northwest winter winds;
- The use of berms to shelter outdoor living terraces; and
- The use and location of deciduous trees to block or filter afternoon sunlight in the summer.

[4] *Catalog on Solar Energy Heating and Cooling Products.* ERDA-75 ERDA Technical Information Center, Oak Ridge, October 1975

[5] Survey *of Solar Energy Products and Services – May 1975.* Prepared for the Subcommittee on Energy Research, Development, and Demonstration, U.S. House of Representatives, by the Congressional Research Service, Library of Congress, June 1975 For sale by U S Government Printing Office, $4.60

[6] *Solar Industry Index.* Solar Energy Industries Association, January 1977 $8.00 prepaid

[7] The American I nstitute of Architects Research Corporation, *Solar Dwelling* Design Concepts, prepared for the U S Department of Housing and Urban Development, Office of Policy Development and Research, May 1976

Table VI II-2.—Site Orientation Chart

Type of climate	cool	Temperate	Hot humid	Hot arid
Adaptations	Maximize warming effects of solar radiation. Reduce impact of winter wind Avoid local climatlc cold pockets	Maximize warming effects of Sun in winter. Maximize shade in summer. Reduce impact of winter wind but allow air circulatlon in summer	Maximize shade Maximize wind	Maximize shade late morning and all afternoon. Maximize humidity, Maximize air movement in summer
Position on slope	Low for wind shelter	Middle-upper for solar radiation exposure	High for wind	Low for cool alr flow
Orientation on slope	South to southeast	South to southeast	South	East-southeast for p.m shade
Relation to water	Near large body of water	Close *to* water, but avoid coastal fog	Near any water	On lee side of water
Preferred winds	Sheltered from north and west	Avoid continental cold winds	Sheltered from north	Exposed to prevaillng winds
Clustering	Around Sun pockets	Around a common, sunny terrace	Open to wind	Along E-W axis, for shade and wind
Building orientation •	Southeast	South to southeast	South, toward prevailing wind	South
Tree forms	Deciduous trees near building; evergreens for windbreaks	Deciduous trees nearby on west; no evergreens near on south	High canopy trees; use deciduous trees near building	Trees overhanging roof if possible
Road orientation	Crosswise to winter wind	Crosswise to winter wind	Broad channel; E-W axis	Narrow; E-W axis
Materials coloration	Medium to dark	Medium	Light, especially for roof	Light on exposed surfaces, dark to avoid reflect ion

*Must be evaluated in terms of impact on solar collector, size, efficiency, and tilt.
SOURCE Solar Dwelling Design Concepts op cit p 72

In warmer climates, a building should be placed at the highest part of the terrain to take advantage of cooling winds (a form of solar energy); in colder climates, it should be located, ideally, in the cup of a hill, allowing sunlight to reach the building while protecting it from chilling winds.

When the terrain and local building codes permit, siting at least part of the building underground or at ground level provides excellent *insulation.* Trees are also an important factor in site selection, acting both as a windbreaker and a lightbreaker. Deciduous trees shade the south side of the house for much of the year, allowing sun light to penetrate during the colder months. The same shading principle is true of such plants as ivy on the walls of the house,

Basic Architectural Considerations

A considerable amount of passive solar heating and cooling can be achieved simply by carefully designing the shape of a house, and the placement of windows and thermal masses in the building (e. g., thick masonry walls). Many older buildings incorporated these features in their designs. (The art of taking such factors into consideration **in designing a house seems** to have been neglected when inexpensive heating fuels became available.)

The size and location of windows is a major factor in determining the temperature of a house. Large, south-facing windows can collect a surprising amount of solar heat, which is transferred to walls and floors.

Figure VII I-I .—A Sample Site Plan Illustrating Techniques for Minimizing Heating and Cooling Requirements

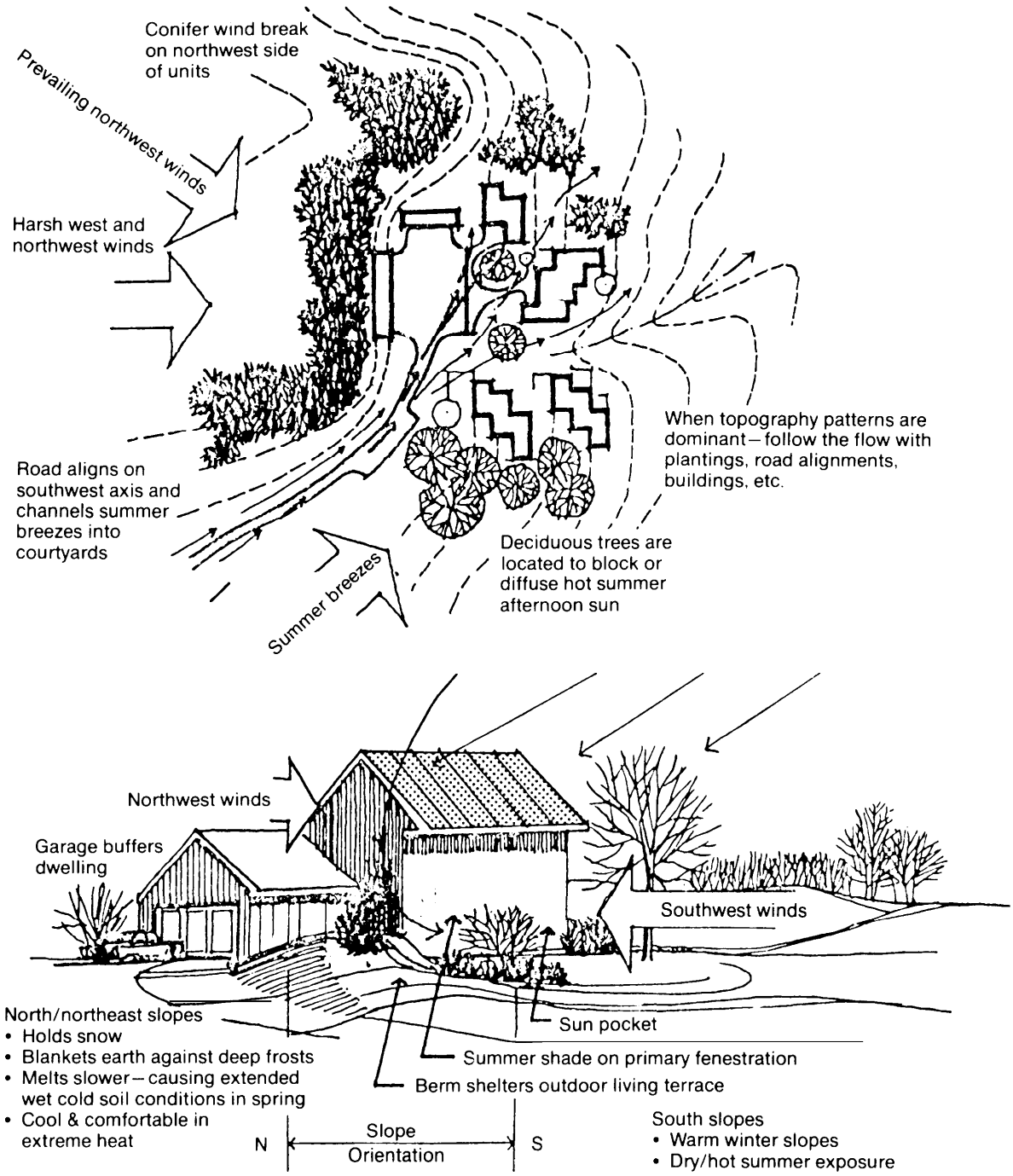

SOURCE The AIA Research Corporation, "Solar Dwelling Design Concepts"

Small, northern windows minimize heat loss. The use of natural shading and orientation to breezes provides i m proved cooling through windows.

The basic shape of a structure is also important. Long ranch-style homes, for example, require much more heating per unit of floor space than cube-shaped, two-story homes, Roof overhangs should shade windows during the summer when the Sun is high in the sky and allow sunlight to enter when the Sun is lower in the sky during the winter months. Dense interior materials with a high heat-retaining capacity, such as masonry, concrete, or stone, can be used to absorb surplus heat from sunlight during the day, and return this heat to the room after dark.

Passive heating and cooling of buildings can be enhanced by taking advantage of the heat gained in southern walls and roofs, natural convection, and the heat-storage capabilities inherent in windows and walls. A number of recent publications have reviewed these designs.[8 9 10]

The simplest systems consist only of a window with insulated shutters. The shutters are opened to permit sunlight to enter and heat the house during winter days, and are closed at night to prevent heat from escaping. The shutters are closed during summer days because white or silver surfaces on their outer surface reflect the Sun's heat. During summer nights, the units open to cool the building. Several innovative techniques have been developed for controlling shutters and covers of this kind. Buildings have been designed which incorporate greenhouses into the southern wall. Designers of one such system, located on prince Edward **Island, Canada, claim that** their building re **mained at a comfortable** temperature throughout the severe winter of 1976-77 without using backup heating systems. [2]

Two slightly more elaborate techniques involve the use of "thermosyphoning" and thermal masses. The "thermosyphoning" systems use natural or forced convection to heat building air in walls, ceilings, or window surfaces heated by the Sun. [1]3 A variety of techniques have used solar radiation for heating a mass with large heat capacity via sunlight, and using direct radiant heating from these masses after the Sun sets. The thermal mass can be nothing more than a dark wall or floor made of thick masonry, stone, or adobe, or a water tank integrated into the wall or floor. The system designed by Steve Baer of the Zomeworks Corporation uses cylinders of water to provide the thermal mass. [1]5

A system which has become known as the "Trombe-wall" collector (after Felix Trombe, a French designer who has designed several such structures since 1967) is illustrated in figure VII I-2. Figure VII I-3 shows a house in Maryland which includes a Trombe wall, The owners estimate that the passive solar system added approximately $2,500 to their construction costs. The device is expected to provide about 50 percent of the building's heat requirements.

The Trombe wall is essentially a vertical hot air collector which uses a thick wall both for a receiver and a storage system. The air can circulate with natural convection or with a fan. In most climates, the performance of the system is improved if adjustable vents are installed over the open-

[8]B Anderson, (Total Environmental Action), *The Solar Home Book,* Cheshire Books, Church H Ill, Harrisville, N H 1976

[9]Leek Ie, et al , *Other Homes and Garbage Designs for Self-Sufficient Living,* Sierra C lub Books, 1975

[10]10$ Alamos Scientific Laboratory *Passive Solar Heating and Cooling Conference and Workshop Proceedings,* LA-6637-C, May 18-19, 1976

[11]Bruce Anderson, *Solar Energy Fundamentals in Building Design.*

[12]J Todd, et al , *The Journal of the New* 4/chemists, New Alchemy, Woods Hole, Mass , spring 1975

[13]T Price, "Low-Tee h no logy Solar Homes that Work with Nature," *Popular* Science, Ti mes Mirror Magazines, I nc , December 1976, pp 95-98, 143

[14]S Baer, *Sunspots,* The Zomeworks Corporation (1975)

[15]M JH arisen, "The Bened ictine Monastery, " *Solar Age,* October 1977, p 24

Figure VIII-2.—The Operation of the Trombe-Wall Collector/Storage System

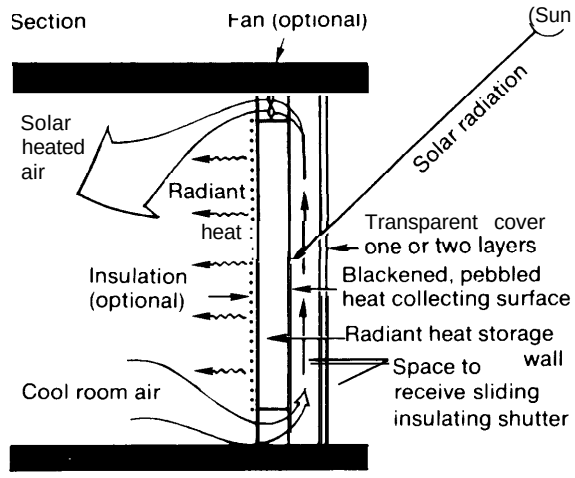

SOURCE: Trombe, F. et al., Concrete Walls to Collect and Hold Heat, *Solar Age*, August 1977, p. 13.

ings which connect the collector airspace with the interior of the house.[16]

The response of walls of various thickness is illustrated in figure VI I I-4, The ability of the thermal mass to average the external temperatures is clearly illustrated. Analysis of the many varients of this system which are possible have just begun, and an analysis of the economics of the systems is difficult because of the scarcity of consistent cost information and the small number of systems which have been adequately instrumented.

The "Skytherm" house **in Atascadero, Cal if., uses water beds** covered by **removable insulating panels on the roof of a** building. **During the winter, the panels are automatically removed during the day, allowing the water to be heated and replaced at night. Heat is provided to the living areas by direct radiation through a metal ceiling**

[16] J D Balcomb, et al , "Thermal Storage Walls for Passive Solar Heating Evaluated, " *Solar Age,* August 1977, p 22

Figure VII I-3.—A House Using a Trombe-Wall Collector Located in Eastern Maryland



PHOTO Courtesy of Andrew M Shapiro, "The Crosley's House—With Calculations and Results," *Solar Age,* November 1977, p 31

Figure VIII-4.—The Temperature Averaging Effects of Masonry Walls of Various Thickness

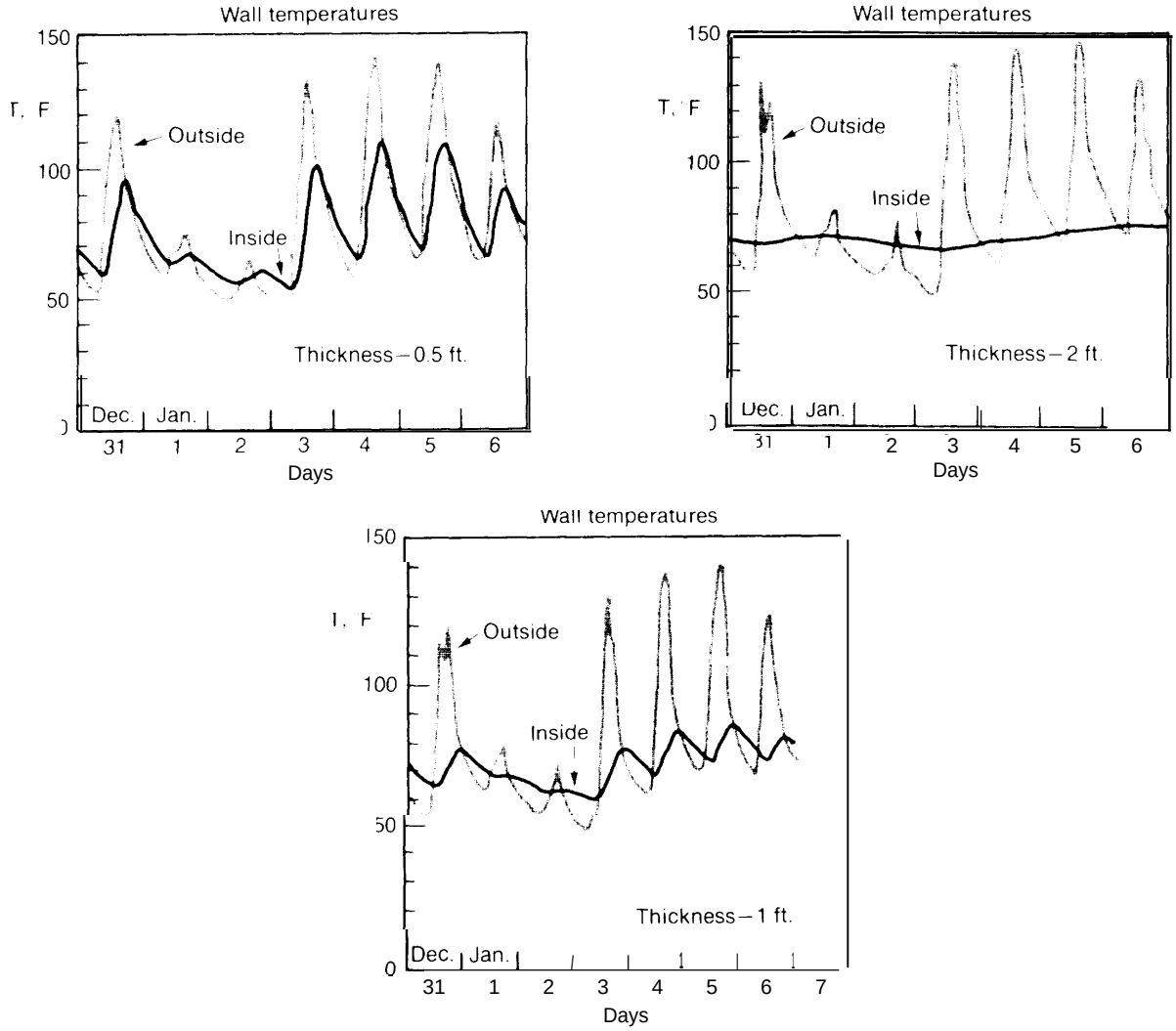

SOURCE: Balcomb, et al., Simulation Analysis of Passive Solar Heated Buildings -- Preliminary Results, *Solar Energy*, vol. 19, 1977, page 281

separating the interior of the house from the water beds. In dry climates with cool summer nights, the system can also provide cooling. Heat is radiated from the water to the sky during the night when the insulating covers are removed, and the thermal mass is used to absorb building heat during the day when the insulating covers are in place.[17] In some recent measurements, this house was shown to maintain an inside temperature between 180 and 240 C (65 °and 750 F) during a 9-month period in which the average high temperature for the hottest month was 32° C (90 °F) and the average low temperature for the coldest month was -1°C (30 °F).[18]

STATIONARY FLAT-PLATE COLLECTORS

Flat-plate collectors have been used for several decades to provide hot water in

[17] Harold Hay, private communication

[18] Phillip W. Miles, "Thermal Evaluation of a House Using a Movable Insulation Heating and Cooling System," *Solar Energy*, Vol. 18, (1976)

Australia, Japan, and Israel. Large numbers of the devices were also sold in southern parts of the United States during the late 1920's and early 1930's, but sales declined rapidly as low-cost natural gas and oil became available. In recent years, however, there has been a great resurgence of interest in the systems, and a large number of designs are being marketed or prepared for marketing. A typical installation is shown in figure VI 11-5.

The cross section of a typical collector is shown in figure VI 11-6. The fluid is heated as it is passed over or through an absorbing surface. At some additional expense, this surface can be specially designed to maximize the amount of sunlight it absorbs and to minimize its radiation at the operating temperature of the collector. The absorptivity of the system is high for wavelengths where the Sun's intensity is greatest and low at wavelengths where the intensity of the radiation from the heated receiver surface is greatest, A number of such "selective surfaces" are now on the market but the development of a high-performance, low-cost selective surface would be a great boon to the collector industry.

The heated surfaces are insulated on the back and sides by standard types of insulation (e. g., fiberglass), and on the front by one or two layers of glass or plastic. These transparent or semitransparent covers can also be made selective. Several common materials are nearly transparent to visible light from the Sun but absorb the infrared radi-

Figure VIII-5.— Typical Home With Solar Water Heating Using Flat-Plate Collectors

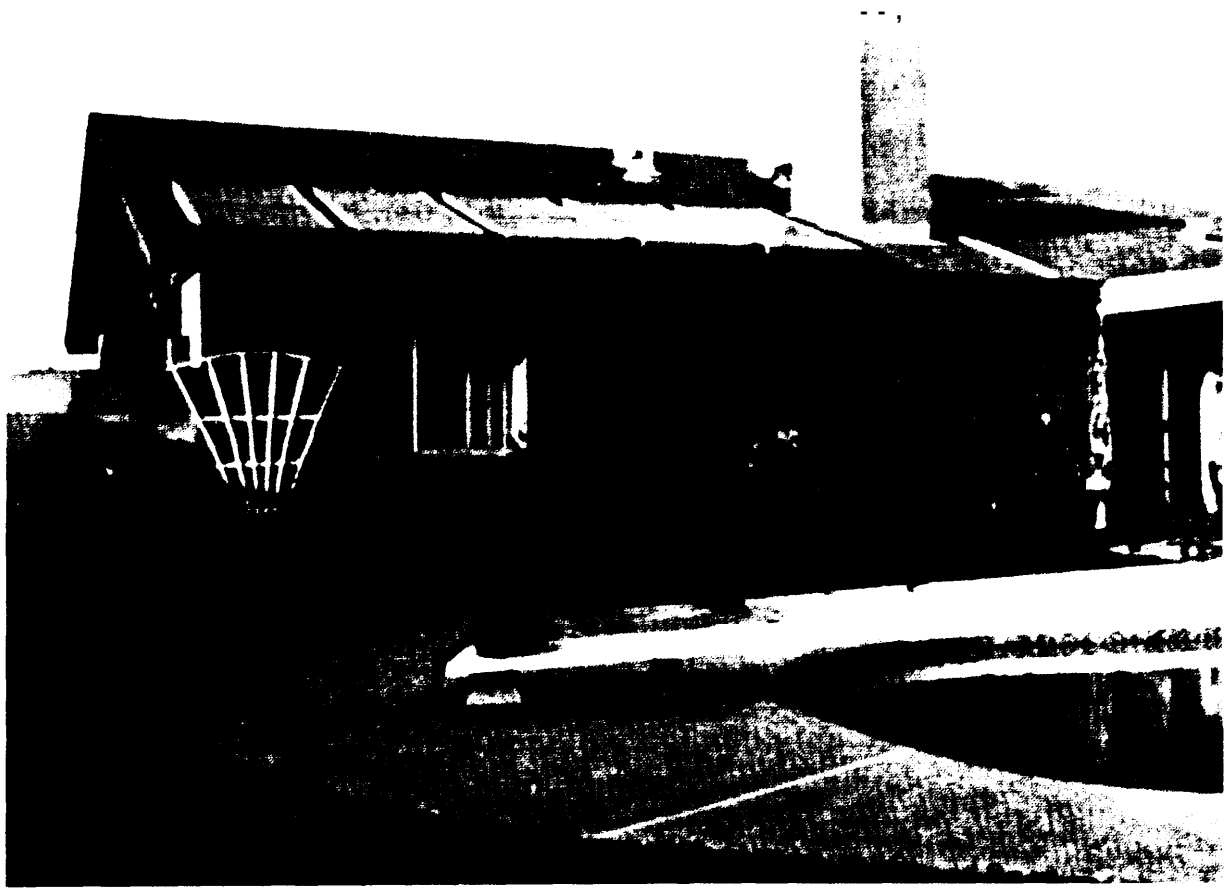

PHOTO Courtesy of American Heliothermal Corp

Figure VIII-6.— Cross-Section of a Typical Modular Flat-Plate Solar Collector

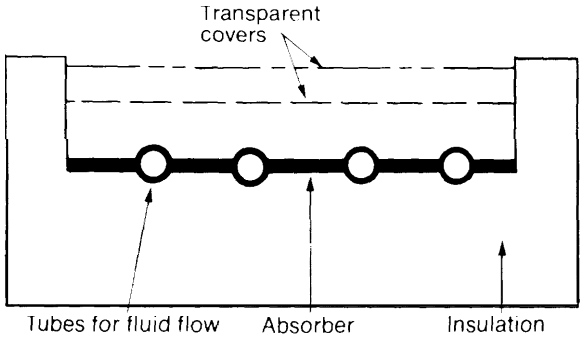

ated by the collectors. (All common glass possesses this property. This is the basis of the "greenhouse effect" which heats closed cars and rooms with southern windows.) Special "heat mirror coatings, " such as indium oxide, can be deposited on collector covers to further reduce losses Such coatings reflect the infrared radiated by the hot receiver, but permit most of the incident sunlight to pass into the collector.

Pond Collectors

Pond collectors can be used when sufficient level ground is available near a site where relatively low-temperature flu ids are required; the systems will probably be most useful when combined with long-term (6-month) thermal storage or when used for industrial-processing facilities since very little output is provided during winter months. Research on these devices has been conducted in Israel for many years. One of the first installations in the United States using such collectors was designed by the SOHIO oil company working with the Lawrence Livermore Laboratory to develop a pond system which could be used for processing uranium. Two types of solar pond collectors are shown in figure VIII-7a and VIII-7b.

The basic Livermore collector design consists of a reinforced concrete curb which forms the periphery of the pond. A layer of sand and a layer of foam-glass insulation are placed inside this curb and a watertight polyvinyl chloride (PVC) bag is placed on top of the rigid insulation. The upper cover of this bag consists of 12 mill (C).3 mm) clear PVC while the bottom layer is a 30 mill (0.8mm) black PVC. A single upper cover for the collector is provided by a flexible fiberglass material called Filon which is commonly used to construct greenhouses. The

Figure VIII-7a.— Pond Collector With a Rigid Cover

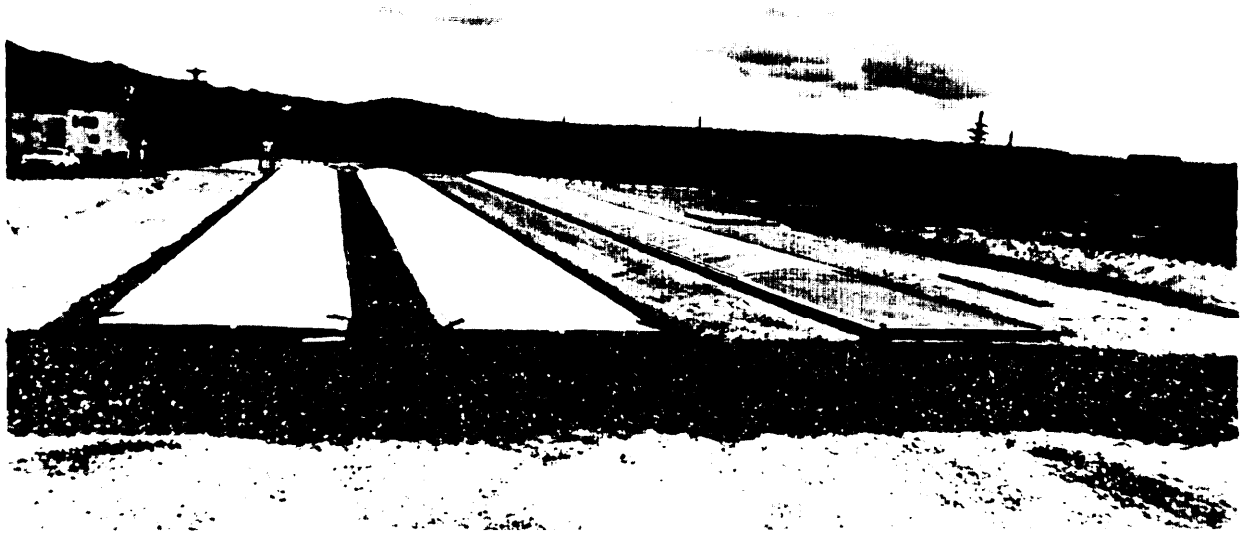

PHOTO Courtesy of University of California, Lawrence Livermore Laboratory and the U S Department of Energy

1. Polyvinylchloride Pool Liner
2. Solar Reflector (North Side)
3. Outer Glazing of Collector
4. Collector absorber Surface and Inner Glazing
5. Bead Insulation
6. Earth Berm
7. Pool Water
8. Pool Extension Wall
9. Support Structure

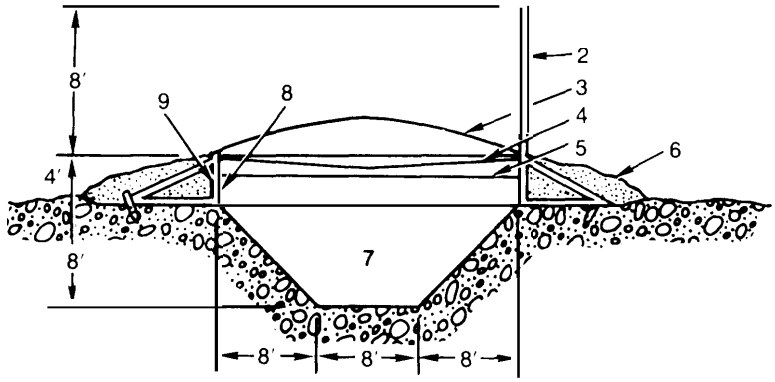

Source J Taylor Beard, Ibid

entire collector is inclined to provide a slope of 0.083 percent (1 inch in 100 feet) of collector length. One I imitation of this design is that the thin PVC bag probably must be replaced every 5 years. It is estimated that this replacement will cost about $6/m^2 of collector.[19]

A contracting firm in New Mexico has estimated that an 8,000 m^2 collector based on this design could be constructed for about $30/m^2.[20] (Smaller systems would, however, be considerably more expensive per unit area.) This collector is typically operated by filling the bag with water in the morning and draining the heated water in the evening, instead of flowing water continuously through the collector. It would be able to provide fluids at a temperature of about sO ^{0} to 600 C during the summer and about 300 to 350 C on sunny winter days, If a second cover is added to the collector (at a probable cost of less than $5/m^2) the devices should be able to provide fluids at about 900 C. PVC bags could not be used at these temperatures, however.

A **number of improvements to this basic design are being investigated.** The Teledyne-Brown Company has proposed replacing the concrete curbing with an extruded aluminum frame which could be assembled rapidly on simple footings. This design would also permit rapid replacement of the plastic film materials.[21] A number of plastic materials are being examined which would improve on the performance of the PVC systems used in the experimental systems. Polybutylene (which is used for "boil **in the bag" processed** foods) can be extruded into a thin (5 mill 0.1 mm) bag, saving material costs and permitting operation at higher temperatures. A du Pont plastic called Hypalon can be used to provide a back absorbing surface for the collector which would probably last 10 to 20 years.

[19] Alan Casamajor, Lawrence Livermore Laboratory, private communication, November 1977

[20] Ibid

[21] Dr Gerald Guinn, Teledyne-Brown Company, private communication, November 1977.

Two systems **which use a pond collector combined with a thermal storage pond have been built and are currently being tested in Virginia**[22,23] **(figure** VI II-7). In one design, the storage system is simply a trough in the ground lined with a plastic swimming pool liner, The trough is filled with water and covered with a foot of styrofoam beads to provide insulation. The thermal losses from such a pond should be acceptable, even without insulation under the pond. The collector is a modified Thomason trickle collector placed over the floating beads. The top cover is a flexible plastic (Monsanto 602) supported by air pressure from a small blower. The pond uses a reflector along the north side to enhance its performance.

A similar, but somewhat larger pond collector/storage system (1 ,340 ft^2, 80,000 gallons) has been built to heat a well-insulated 5,000 ft^2 home in Stanardsville, Va.[24] This system, which cost $6,000, is expected to provide all of the heating needs of the house. A unique radiant heating system is used which permits the use of water only 50 to 100 F warmer than the room temperature for heating purposes.

Pond *collectors* provide a smaller fraction of their output during winter months than tilted collectors since the winter Sun is low in the sky. For conditions typical of many solar heating systems, the output occurring during the coldest 6 months of the year is only 5 to 16 percent of the total annual output. (See table VII 1-13 at the end of this chapter.) As a result, the attractiveness of ponds used for heating would be greatly increased if a low-cost technique for storing energy generated by the pond during the summer is developed. It is possible to build the collector on top of a pond.

[22] J Taylor Beard, F A Iachetta, L V Lilleleht, and J W Dickey, *Annual Collection and* Storage *of Solar Energy* for *the Heating of Buildings, A nnual Progress Report,* May 1976-J uly 1977 to ERDA under Contract No E-(40-1)-5136, Publication ORO/51 36-77

[23] ''john W Dickey, "Total Solar Heat-Totally Non-polluting, " presented at E leventh Advanced Seminar, Society for Clinical Ecology, San Francisco, Calif , Oct 31, 1977

[24] John W Dickey, Ibid

Flat-Plate Collectors Assembled Onsite

Thomason.–One of the oldest and simplest solar liquid collector designs used for heating buildings is the "Solaris " system designed by Harry E. Thomason. The first system was installed in a suburb of Washington, D. C., in 1959. In this system, water is pumped to the roof ridge and trickled down channels of a black-painted, corrugated-aluminum absorber. The heated water is collected in a gutter at the cave. A single glass cover is used. The system can only produce fluids with temperatures in the range of 300 to 500 C. Special ductwork is required in the houses employing the system, since relatively large amounts of air must be moved through the house; the air used to heat the house is cooler than air typically used in forced-air heating systems. Systems are sold with a 5-year guarantee. The performance of the system has been a subject of continuous controversy.

Calmac.–Another low-priced collector is the Calmac Sunmat. The absorber consists of a 4-foot-wide mat of black synthetic rubber tubes. At the building site, the mat is spread on l-inch-thick fiberglass insulation board and glazed over with translucent plastic/fiberglass sheets. The Sunmat's nonmetallic materials have been tested up to 180° C, and the price of materials for double-glazed systems is $35 to $44/$m^2$. Assembling the system will, of course, add significantly to system costs, but the assembly is simple enough that unskilled workers or homeowners could do it. The life expectancy of the system remains to be established.

Factory-Assembled Modular Collectors

PPG.-Glass has been used longer than plastic as a flat-plate cover material, and PPG built its Baseline Solar Collector around standard, hermetically sealed, double-pane window units. PPG's collector consists of a flat, black, aluminum roll-bond absorber backed by 6 cm of fiberglass insulation. Panels are 193 by 87 by 9.5 cm (76-3/16 by 34-3/16 by 3-3/4 in) and weigh 50 kg (110 Ibs) empty. They are available only

through distributors and contractors. PPG recommends that the collectors be used in a closed system with treated water to prevent corrosion. Collectors are sold with a 2-year warranty which excludes glass breakage. (Although the insulation is optional, that option has been assumed in the cost shown in the summary table at the end of this chapter. Other options include copper roll-bond absorbers, selective surface, and singlecover glass.)

Sunworks.–Sunworks sells a selective-surface collector with a single glass cover for $84 to $114/m2. This design can achieve efficiencies comparable to those of double-cover systems which do not use selective surfaces. The absorber is copper tubing soldered to a copper sheet and treated to produce a selective surface. Because it is copper, a tapwater, flow-through system can be used. Panels measure 91 by 213 by 10 cm (4 ft by 7 ft by 4 in), and weigh 50 kg (110 lbs) empty. A 5-year **warranty is offered, excluding** cover-glass breakage.

Honeywell/Lennox.–Where output temperatures of 950 C and higher are required, higher efficiency can be achieved if a selective-surfaced absorber is combined with two covers. Lennox Industries markets a collector of this type under license from Honeywell for around $145/m2 wholesale. Two sheets of antireflection-etc heal, low-iron glass, and a black-chrome selective coating on the steel absorber are key features of the high-performance Honeywell LSC-18-I Solar Collector. Copper tubing, bonded to the steel plate, provides the resistance of copper to fluid corrosion without the expense of an all-copper system.

Panel dimensions are 183 by 91 by 16.5 cm (6 ft by 3 ft by 6-1/2 in) and dry weight is 68 kg(150 lbs).

Solaron.-The Solaron collector is an air-heating device designed by George Lof, who has been **designing solar collectors** for nearly 30 years. The device (shown in figure VI 11-8) has a steel frame insulated with 3.75

Figure VII I-8.—Typical Air Collector Installation

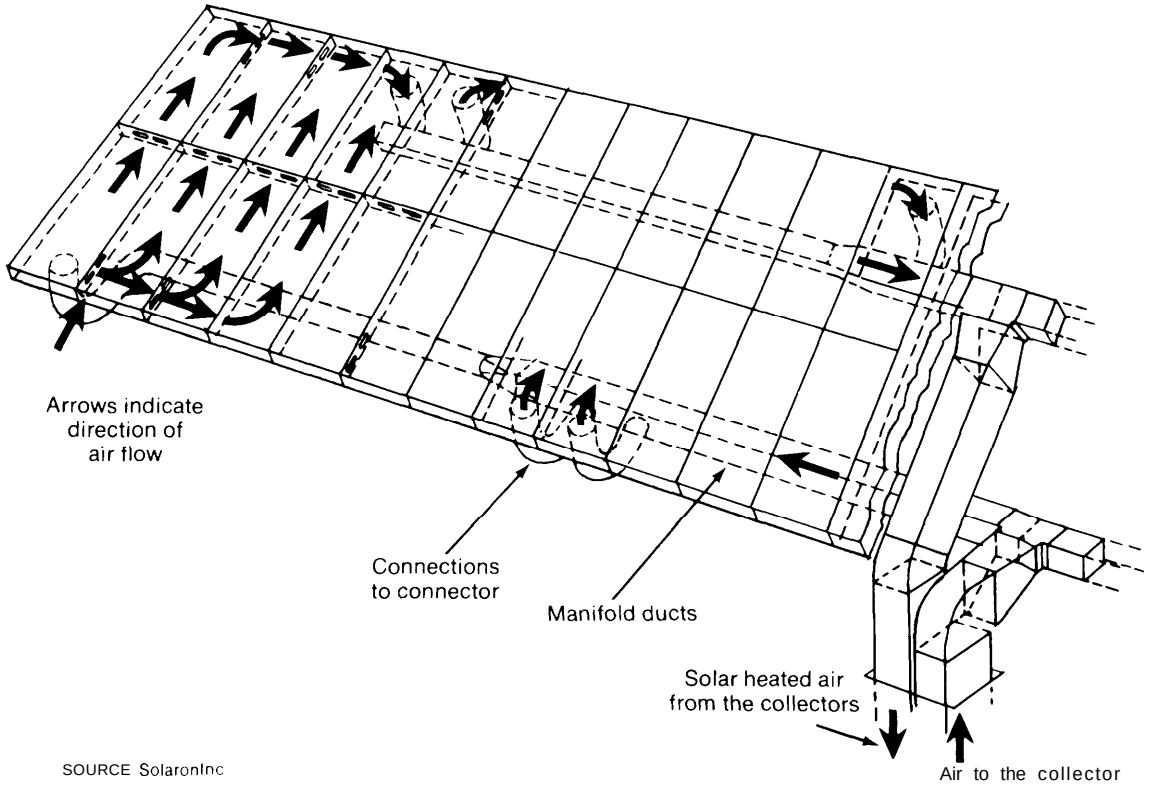

SOURCE SolaronInc

in (9.5 cm) fiberglass and has two 0.125 in (0.32 cm) low-iron, tempered-glass covers. The absorber is a 28-gauge steel plate with a high-absorbance ceramic enamel coating. The collector is about 65-percent efficient when the temperature of the air leaving the collector is 490 C above the ambient a i r temperature. 25 The company has attempted to make the collector easy to install by designing units so that they can be butted together and bolted in place without additional fittings between collectors, The wholesale price of the device is currently $1 18/m2. 2.

TUBULAR SOLAR COLLECTORS

Another type of stationary collector beginning to reach the market has a tubular rather than flat-plate configuration. The heat-transfer fluid is circulated through a glass or metal tube which is enclosed in a larger glass tube The space between the inner and outer tubes is dead air or a vacuum, If a vacuum is combined with a selective surface, thermal losses are much smaller than with the conventional f tat-plate design. The tubular concept also eliminates insulation in back of the absorber. Such a collector can be lighter than the conventional double-glazed, flat-plate type,

The outer glass envelope is produced by the same machines which make fluorescent-lighting tubes. Indeed, three of the four manufacturers of tubular collectors are also major makers of tubular lamps. The fourth, KTA, is a small business which buys its tubing from a large fluorescent light tube manufacturer.

Each manufacturer boosts its collector's performance differently (figure VI 11-9). Philips of the Netherlands and KTA silver the bottom half of the glass tube. Owens-1 Illinois spaces the tubes and places a flat, white reflector behind them. General Electric also spaces the tubes, but puts a reflective trough behind them. KTA does not evacuate the outer-glass tube, but covers the array of tubes with a plexiglass cover which serves both to reduce heat losses and protect the tubes. Owens-1 Ilinois, KTA, and General Electric apply a selective surface to the absorber while Philips applies a selective heat mirror of indium oxide to the outer-glass tube.

CONCENTRATING COLLECTORS

Nontracking Concentrating Systems

Boosted Flat Plates.–The simplest concentrator is the boosted flat-plate collector. One or more flat mirrors are mounted so that they reflect light onto a flat-plate collector most of the time. The rows of collectors run east to west and the mirrors are between the rows, In winter, when the Sun is low in the sky, the light comes straight into the collectors, missing the mirrors. **I n** summer, when higher temperatures are needed to operate absorption air-conditioning, the Sun is higher in the sky and strikes both the collector and the mirrors — thus increasing the concentration of light on the collector.

Several varients on this basic approach have been proposed, Some of the tubular collectors, shown in figure VIII-10, for example, use a stationary or cusp-shaped mirror to achieve a low level of concentration. A system proposed by K. Celchuck of JPL uses a shaped-mirror unit mounted between stationary flat plates, The mirror unit is manually I if ted and rotated twice a year to ensure maximum performance during the summer **and winter seasons**

Several recent theoretical and experimental studies of the performance of simple mirror booster systems have indicated that the output Of flat-plate collectors can be enhanced by factors of 1.45 to 1.6.[27][28]

[2] 'The Solaron Corporation, 485001 ive Street, Commerce City, Colo 80022, "Technical Data, Seires 2000 Air Type Solar Collector"

"George Lof, Solaron Corporation, private communication, November 1977

[27] A M Clausing and A L Edgecombe, "Solar Collector Cost Reduction with Reflector Enhancement, " ISES 1977 meeting, p 37-25

[28] R L. Reid, et al , "Measurements on the Effect of Planar Reflectors on the Flux Received by Flat-Plate Collectors," ISES 1977 conference, p 37-12

Figure VIII-9.— Various Tubular Collector Designs

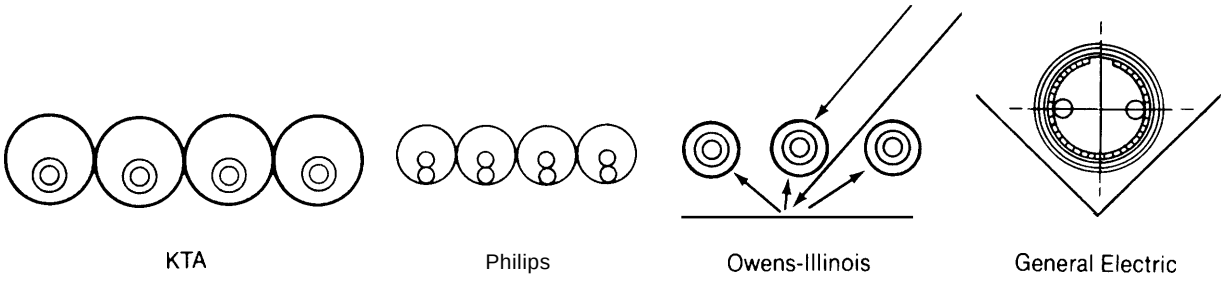

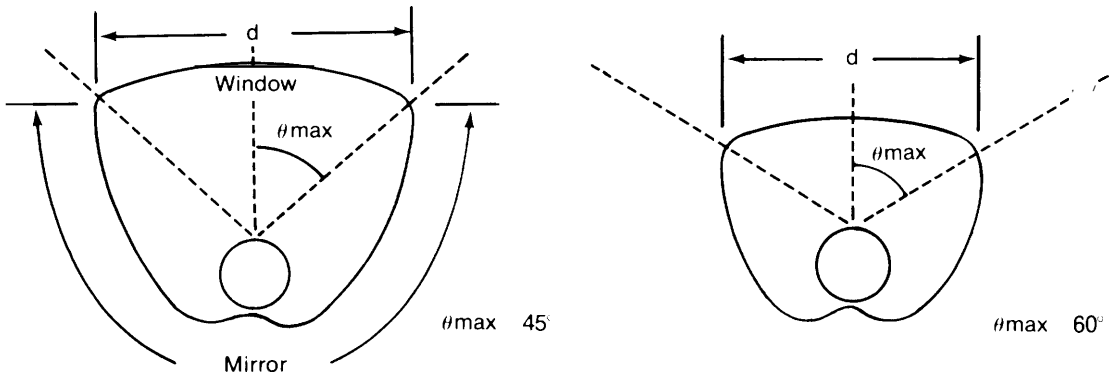

Proposed optimum cusp designs (J. D, Garrison)

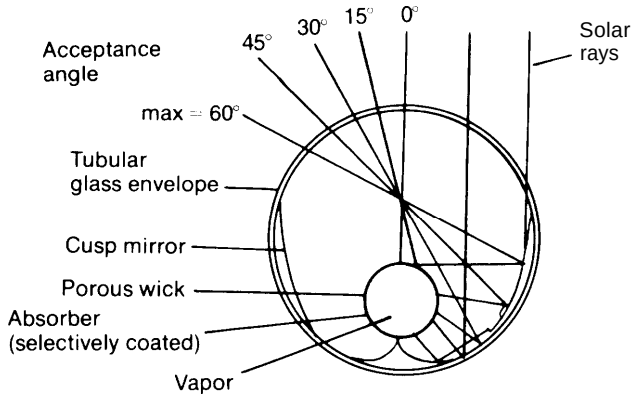

Corning Glass

SOURCES Manufacturers data

Garrison, J D 'Optimization of a Fixed Solar Thermal Energy Collector, " Proceedings of the 1977 Annual Meeting of the American Sectlon of the International Solar Energy Society, Orlando Florida. June 6-10 1977, p 36-15

Ortabasi, U and W M Buehl, '<An Internal Cusp Reflector for an Evacuated Tubular Heat Pipe Solar Thermal Collector, 1977 ISES meeting, p 36-30

Figure VIII-10.— Flat-Plate Collectors With Stationary Boosters

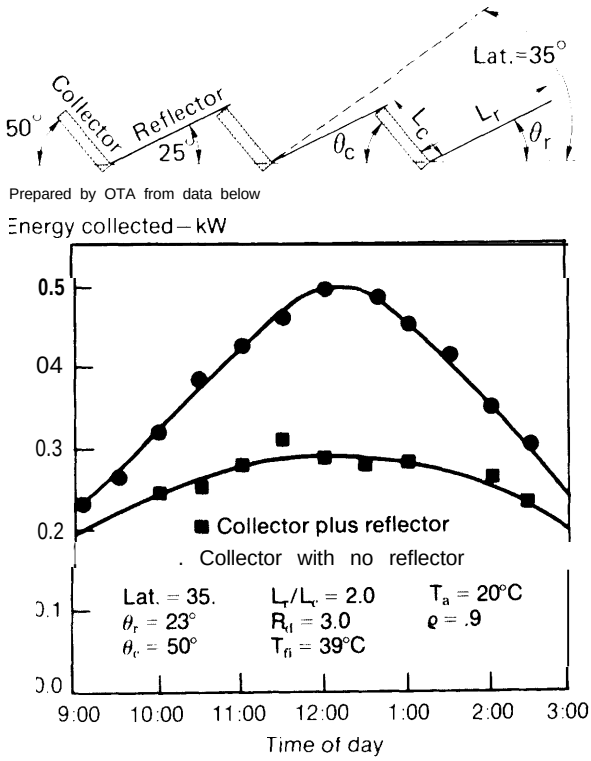

SOURCE: Hill, John M. and Edward H. Perry "Enhancement of Flat Plate Solar Collector Performance Through the Use of Planar Reflectors" Proceedings of the 1977 Annual Meeting of the American Section of the International Solar Energy Society page 37-19

Total-Internal Reflection Concentrator.–A concentrator system using a plastic doped with fluorescent dies has recently been suggested which may be able to achieve **concentrations on the order of 100 x with no tracking.**[29 30] The dye molecule reradiates light that it absorbs at a random angle. The reradiated light striking the **receiving** surface at an angle greater than the angle of total internal reflection continues to be reflected until it reaches the edge of the sheet covered with the receiver. (The frequency of the reradiated light can be selected to optimize photovoltaic cell performance.) If the dye has zero absorptivity at the reradiated frequencies, collection efficiencies as high as 60 to 75 percent are theoretically possible using plexiglass cells 1 to 2 meters on a side,31

Compound Parabolic Collectors.-The Compound Parabolic Concentrator (C PC) collector (also called the "Winston" or "Baranov" collector) consists of a stationary reflective trough with a receiver at the bottom Each wall is a section of a parabola, and the system is designed so that all of the light received from a relatively large region of the sky will reach the receiver surface (see figure VI 11-11). Sunlight received from a solar disk which is not on the main axis of the collector, however, produces a very irregular image on the receiver and some care must be taken to ensure that this lack of uniform illumination does not create damage to the receiver. Systems with concentration ratios of 9 to 10 can be designed which are able to collect energy from the Sun's disk for at least 7 hours each day with only 10 position adjustments per year.[32] If the system is not seasonally adjusted, useful output will be available for less than 7 hours. (A two-dimensional concentrating system has also been designed, but this system must be moved at 15-minute intervals about one axis to follow the Sun during the day.) The mirror shape developed for this design can also be used at the focus of other concentrating systems to reduce the requirements for high-tracking precision.

The CPC cuts costs by eliminating the need for elaborate tracking systems, but it uses more mirror area than a trough or dish of the same aperture because of the steep angles of its reflective sides. The CPC also uses more receiver pipes because of its lower concentration ratio. Moreover, multiple reflections inside the collector can attenuate the sunlight before it reaches the receiver, These factors considerably increase the cost of the CPC design. *inexpensive* techniques have been proposed for producing the required shape by extrusion or other shaping processes. Material costs of $5 to $20/m^2 appear possible for collectors

[29]W H Weber and J Lambe, Appl Opt 16, 2299 (1 976)

[30]A Goetzberger and W Breubel, Appl Phys 14, 121 (1977)

[31]A Goetzberger, op cit

[32]Argonne, op cit

Figure VII I-I 1.—One-Axis Compound Parabolic Collector

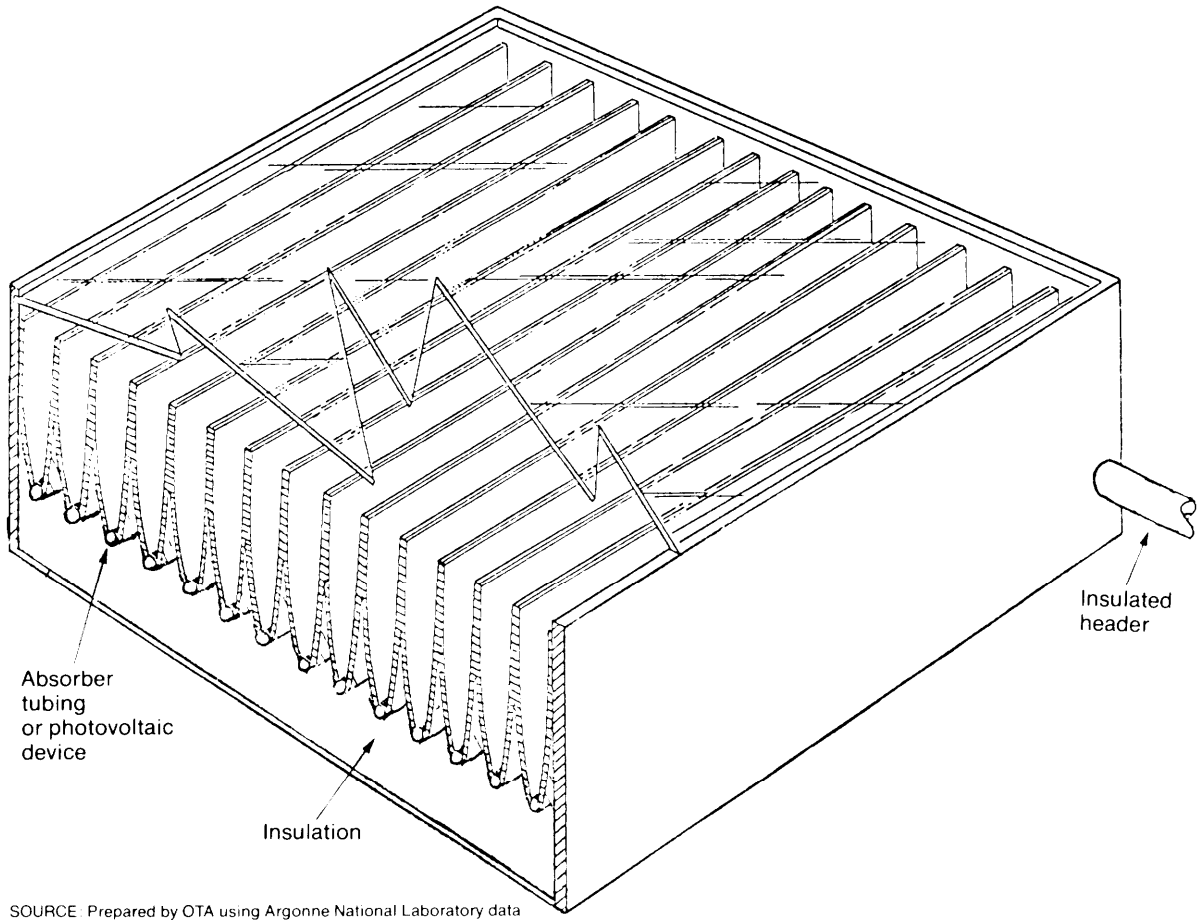

SOURCE: Prepared by OTA using Argonne National Laboratory data

used with photovoltaic systems. Fabricating costs are difficuit to estimate at this point.

Active Tracking and Concentrating Systems

Techniques used to track the Sun fall into three broad categories:

1. Systems in which the concentrator and the receiver both rotate (focusing can be by means of a curved or segmented mirror or a Fresnel lens);
2. Systems in which the concentrating mirrors remain stationary and the receiver shifts to follow a moving focal point or line; and
3. Heliostat systems in which the mirrors rotate to focus light onto a stationary receiver.

ONE-AXIS TRACKING

One-axis tracking collectors concentrate the Sun's energy onto a l i near receiver. They typically are capable of producing temperatures in the range of 1500 to 3000 C, and there are many different ingenious designs. One-axis trackers can either follow the Sun from east to west each day, or they can face due south and tilt up-and-down to follow the Sun. The terminology can be confusing because the axis of the east-to-west tracker runs i n a north-to-south line, and the axis of the south-facing collector runs in an east-to-west line, Solar technologists usually refer to these collectors according to their axis orientations. Thus, for example, a parabolic trough concentrator which follows the Sun from east to west is called a "north-south

Figure VIII-12. —Albuquerque-Western Tracking Collectors Installed on Modular Home

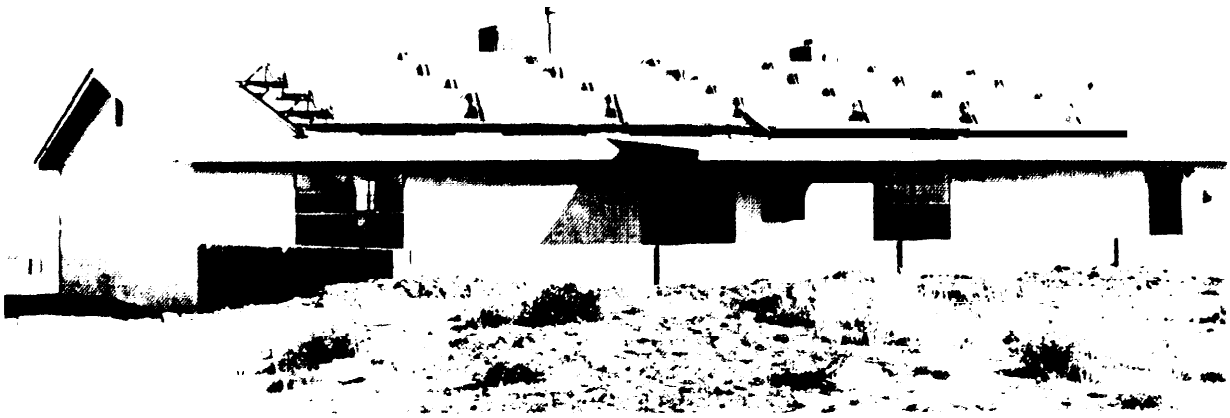

PHOTO Courtesy of Albuquerque Western Solar Industries

trough, " The "north-to-south" polar-mount collectors collect more energy than north-south or east-west troughs with horizontal axes

Collector and Receiver—Both *Tracking*

Parabolic Troughs. –Albuquerque- *Western:* Albuquerque-Western Industries, a modular housebuilder, is now producing parabolic trough solar collectors as well as complete solar heating and water heating systems. The company has installed systems on new modular houses (figure V I I **I-I 2) and on existing conventional residences.** The collectors (including tracker) sell for $48 to $51 per square meter of aperture. This makes them less expensive than most flat-plate collectors Each trough is 51 cm wide and 2.44 m long (20 in by 8 ft) with a clear Tedlar plastic front window and a 3.2 cm (1 ,25 in) flat-black copper absorber tube inside The reflector is aluminized Mylar. The present unpressurized system is designed to produce hot water at up to 880°C , Albuquerque-Western Industries is working on an improved but more expensive collector which will produce 1500 C, enough to run absorption air-conditioning or to store more heat for winter heating, The Mylar reflector may have a relatively short life, and a new material may need to be developed; but they are designed for easy replacement on-site.

Sandia: As **part of its total energy** program, Sandia Laboratories in Albuquerque has built some high-performance parabolic troughs for use at 2300 to 3150 C. Sandia's units, like most other linear-focus collectors, may be mounted with the axis oriented either east-west or north-south. The receiver is a selectively coated pipe inside an evacuatd glass tube. The cost of the system in commercial production has not been established.

Acurex: Acurex Corporation is commercially producing two models of parabolic troughs. One is a high-performance parabolic trough similar to the Sandia design (figure **VIII-13). The trough is formed by clamping** polished aluminum reflective sheets to parabolic ribs. The sheets are easily replaceable and the units CO I lapse for compact shipping. Black chrome selective coating is used on the 3,35 cm (1.3 in) diameter stainless steel absorber pipe which is inside a 5.08 cm (2 in) diameter glass tube (not evacuated). The absorber tube is specially designed to increase heat transfer to the flu id. Each trough is 3.05 meters long and 1.83 meters wide (10 by 6 ft), and eight troughs (end-to-end) can be driven by each

Figure VIII-13.—Acurex Parabolic Trough

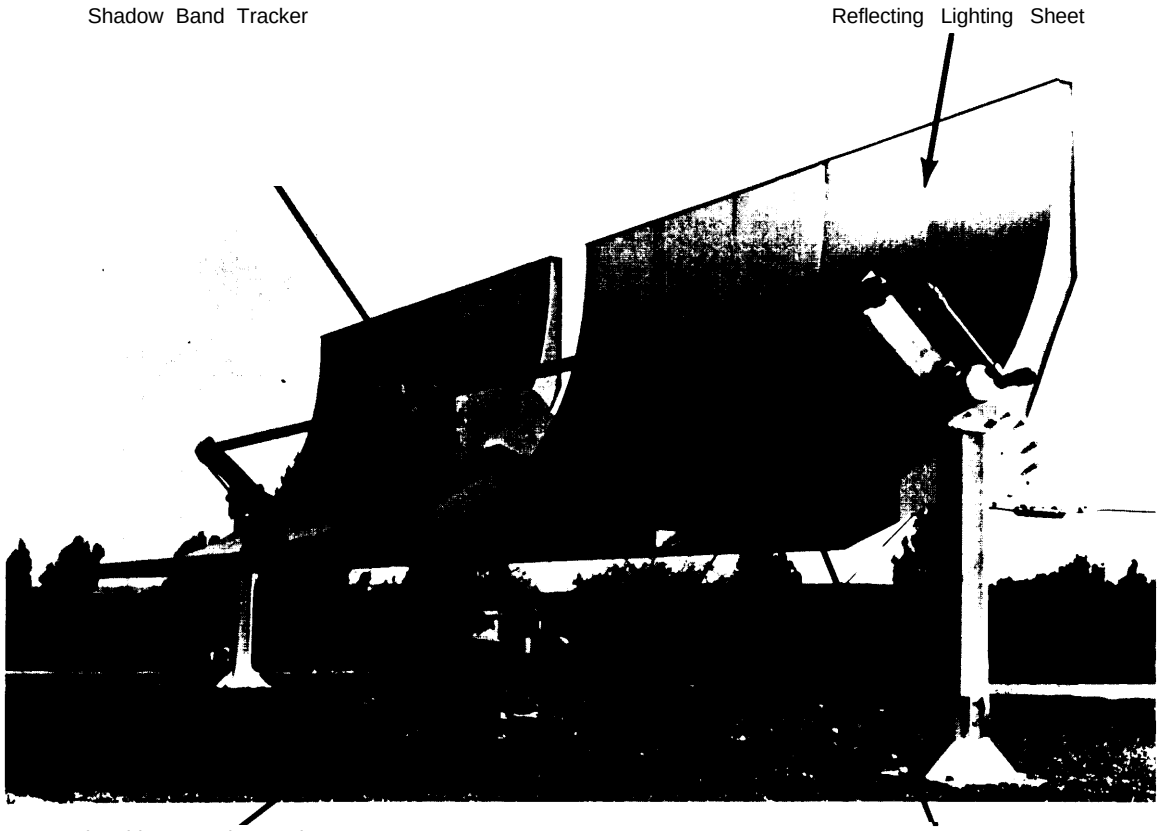

PHOTO Courtesy of Acurex Corporation, 1977

tracker unit. The receiver pipes of the eight collectors attach directly to one another, eliminating much interconnect piping and reflector end losses. The other trough design is basically similar but is designed for use at lower temperatures (less than 1800 C). It is only 4 feet wide and the absorber tube is uncovered. In a recent contract, Acurex sold 625 m^2 of its collectors to New Mexico State University for $156/m2.

Solartec: Solartec Corporation is producing a 44X concentration parabolic trough which heats pressurized water or other fluids to over 200° C. Each 1.22 by 3.05 m (4 by 10 ft) trough has an aperture of 3,4 m^2 and weighs 25 kg. The 2.54 cm (1 in) hard copper absorber pipe has a selective coating. A smaller pipe within the absorber pipe improves fluid heat transfer by increasing the flow velocity, The mirror is presently coated, anodized, polished sheet aluminum, but other material may be used in the future to achieve better reflectivity. There is a 2-, 5-, and 10-year limited warranty on moving parts, reflectors, absorbers, and framework, respectively.

Beam Engineering: Beam Engineering makes a sheet aluminum parabolic trough very similar to the Albuquerque-Western trough, except that each Beam trough is smaller and has its own tracker (figure VI 11-14). Costs are considerably higher but Beam feels that large orders and the use of fewer trackers could lower prices significantly. Each collector is 1.83 m long and 0.51 m wide (6 ft by **20** in) with a replaceable clear Tedlar front window and a 5.08 cm (2 in) black-copper absorber tube.

Linear Fresnel Lens.–A linear Fresnel lens of extruded acrylic plastic forms the focusing

Figure VIII-14.— Beam Engineering Parabolic Trough on a Polar Mount

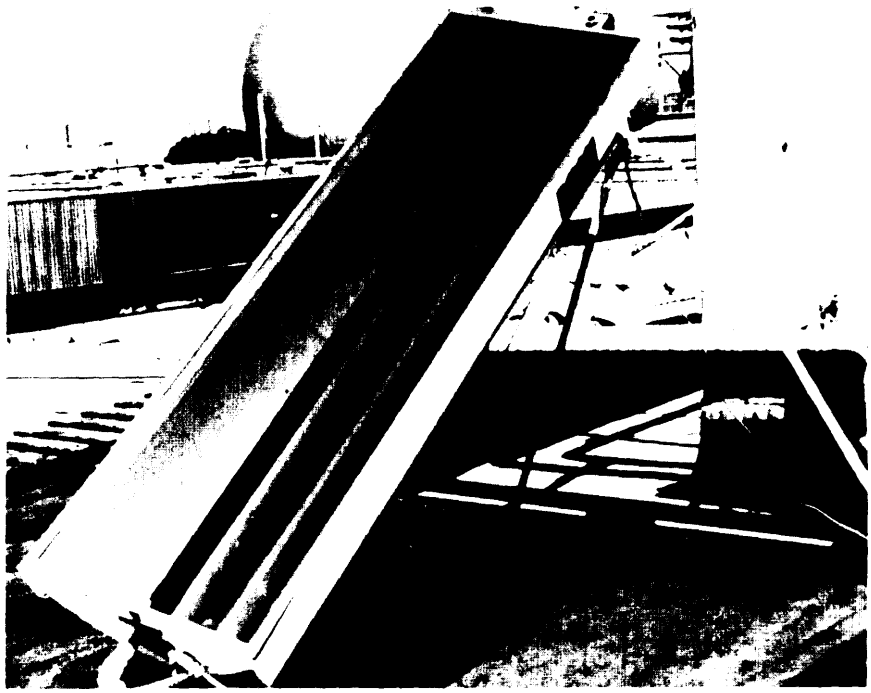

PHOTO Courtesy of Beam Englneennng

element of the Northrup concentrating solar collector shown in figure VII 1-15. Northrup Inc., a Texas Company whose principal business has been manufacturing heating and cooling products, has invested nearly $250,000 developing this unit. Several large DOE-assisted demonstration projects are using Northrup collectors. Each unit is 3.05 m long with a 30.5 cm wide aperture (10 ft by 12 in). The recommended mounting is with the axis parallel to the Earth's axis ("polar mount") and with a center-to-center spacing of 60 to 75 cm between adjacent units. One tracker drives 24 units. Northrup offers a limited warranty on all parts and workmanship of 18 months from shipment or 12 months from installation, whichever occurs first. Currently, the collectors are much more expensive than flat-plate devices capable of producing energy at equivalent rates,

Northrup is also working on a higher performance linear Fresnel collector with a greater concentration ratio and a more efficient absorber. This advanced unit will produce the higher temperatures necessary for efficient absorption air-conditioning and heat engine operation.

McDonnell-Douglas Company has developed several prototype high-performance linear Fresnel collectors under contract to the DOE/Sandia Solar Total Energy Program. Using Therminol heat-transfer fluid, the units have produced 3150 C steam. The 3.8-cm- (1 'A-in) wide absorber tube is coated with a black-chrome selective surface and placed in a glass tube to cut heat loss (figure VIII-16). The collector design is still being developed. The lenses used are manufactured by Swedlow, Inc.[33] The lenses used in the prototype were cast in one 94 by 233 cm (37 by 92 in) piece and produced a concentration ratio of 21:1 Swedlow believes that *40:1* is about the maximum practical limit

[33] W R Lee (Swedlow, Inc , Staff Assistant, Marketing Vice President), private communication, Nov 17, 1976

Figure VIII-15.—(a) The Linear Fresnel Lens and the Absorber Tube are Both Visible in This Cross-Sectional End-View of the Northrup Concentrating Collector

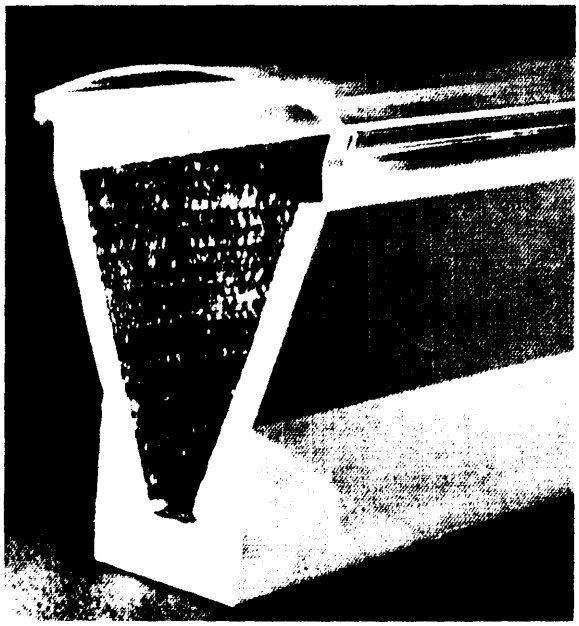

(b) Array of Northrup Collectors is Mounted for Polar Tracking

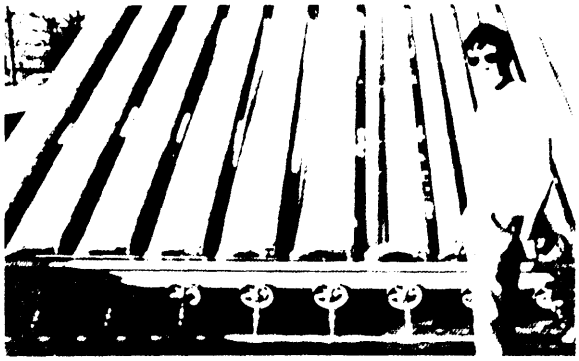

PHOTOS Courtesy of Northrup, **Inc**

for linear Fresnel lens concentration. More information on the Swedlow cast-acrylic Fresnel lens is presented in the discussion of two-axis, full-tracking systems.

Tracking Receiver—Stationary Mirrors

These designs give the benefits of concentration while keeping most of the collector area stationary. But since the aperture does not follow the Sun, early morning and late afternoon performance suffers.

Figure VIII-16.— Receiver Pipe Inside McDonnell Douglas Prototype Linear Fresnel Lens Concentrator



PHOTO: Courtesy of McDonnell Douglas Astronautics Co

General **Atomic.–General Atomic Company has patented a design** for a trough consisting of reflective strips which can be rigidly fixed while still maintaining sharp focus (figure VIII-17). The design is sometimes called the Russell collector after one of its inventors. The troughs are oriented east to west and a glass mirror is bonded to a concrete form. The focal line moves in a circular arc as the Sun changes position, and the absorber pipe moves to follow it. The pipe is a high-performance design and may incorporate a secondary reflector to raise the overall concentration ratio to 60:1.

General Atomic hopes that this design can eventually be built to sell for less than $65/m^2$ installed after a large production industry is established but, of course, this cost has not been verified. The design is well

'igure VIII-17.—General Atomic Distributed Collector Concept

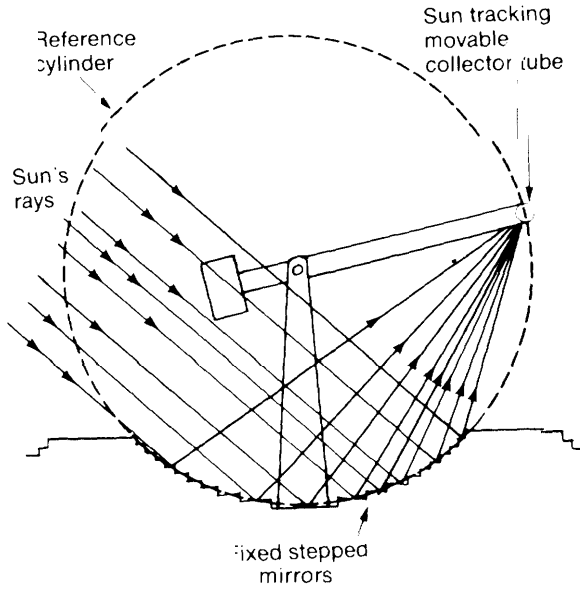

SOURCE Nontechnical Summary of Distributed Collector Concepts ATR-76(7523 -07)-1 (I) ERDA

Suited to casting in concrete. Sandia has ordered a 7-ft-wide by 400-f t-long prototype from General Atomic being tested in connection with its solar total energy system.[34]

scientific-Atlanta. Scientific-Atlanta, Inc., is a General Atomic licensee and is producing 2.44 x 3.05 m (8 by 10 ft) collectors (figure VI 11-18). Rather than embedding mirrors in concrete, Scientific-Atlanta uses steel sheet-metal ribs on which the low-iron, back-silvered glass mirrors are fixed. The collectors bolt end-to-end to reduce optical end-losses and interconnection pipe expense The receiver is a high-performance, tubular-evacuated collector manufactured by Corning Glass Works. Scientific-Atlanta installed a 50 m^2 prototype at the Georgia Institute of Technology in 1975.

[34] J Russel (General Atomic Co.), private communication, March 1977

Figure VIII-18.— Russell Collector by Scientific"Atlanta, Inc., Installed at Georgia Institute of Technology

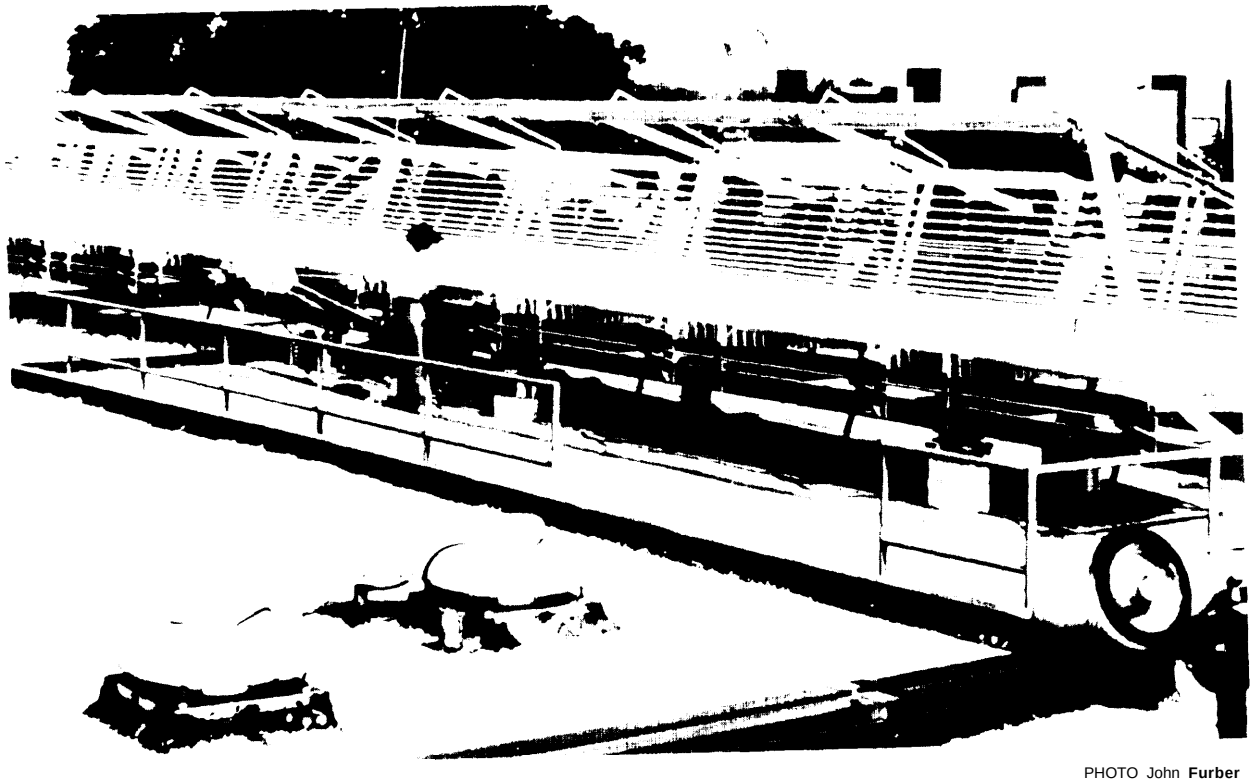

PHOTO John **Furber**

AAI.-AAI is also **developing a fixed trough with a tracking receiver.** The trough has a circular cross section and the concentration ratio is 8:1. It is not designed to produce the very high temperatures of the General Atomic design. The effective cost of the system would be considerably less if the trough could be used as a part of a building roof. The axis is oriented east to west and a wide range of trough sizes is possible. The receiver is similar in construction to a long, narrow, flat-plate collector mounted upside down on long arms above the reflecting trough. The reflecting surface is glass mirror.

Linear Heliostats/Stationary Receiver

The linear-segmented reflector concept was originally suggested by Professor F. Francia and tested in 1963 at the Universite de Provence in Marseilles. " The design has attracted the interest of several U. S. manufacturers. The basic approach is illustrated in figure VII 1-19. The receiver is fixed and the light is focused on it by an array of long, narrow mirrors which follow the Sun. The design has several advantages: the receiver pipe carrying heated liquids does not move; the moving mirrors are all relatively small; and al I mirrors are driven by a single tracker.

SunTech Systems (a subsidiary of Sheldahl) is producing a concentrator consisting of 10 long, narrow reflectors which direct the Sun onto a single stationary receiver pipe. Each reflector is 6.1 x 0.30 m (20 by 1 ft) and is slightly curved to concentrate the Sun by four times onto the absorber. This gives an overall concentration ratio of 40X. Two of these modules are placed end-to-end and driven **by a single tracker.**

This unit can withstand very high winds, and the slats are automatically turned upside down when the Sun isn't shining to prevent frost formation or snow accumulation. Sheldahl received a $176,156 ERDA contract in 1976 to develop the design. A prototype has been installed at Sandia.

Itek is doing research on a similar linear-segmented reflector. However, Itek's receiv-

"Arrow & Francia, *Journal of Solar Energy,* Vol 11, 1, 1967.

Figure VIII-19.– ITEK Distributed Collector Concept With Inset Showing the High" Performance Receiver Design

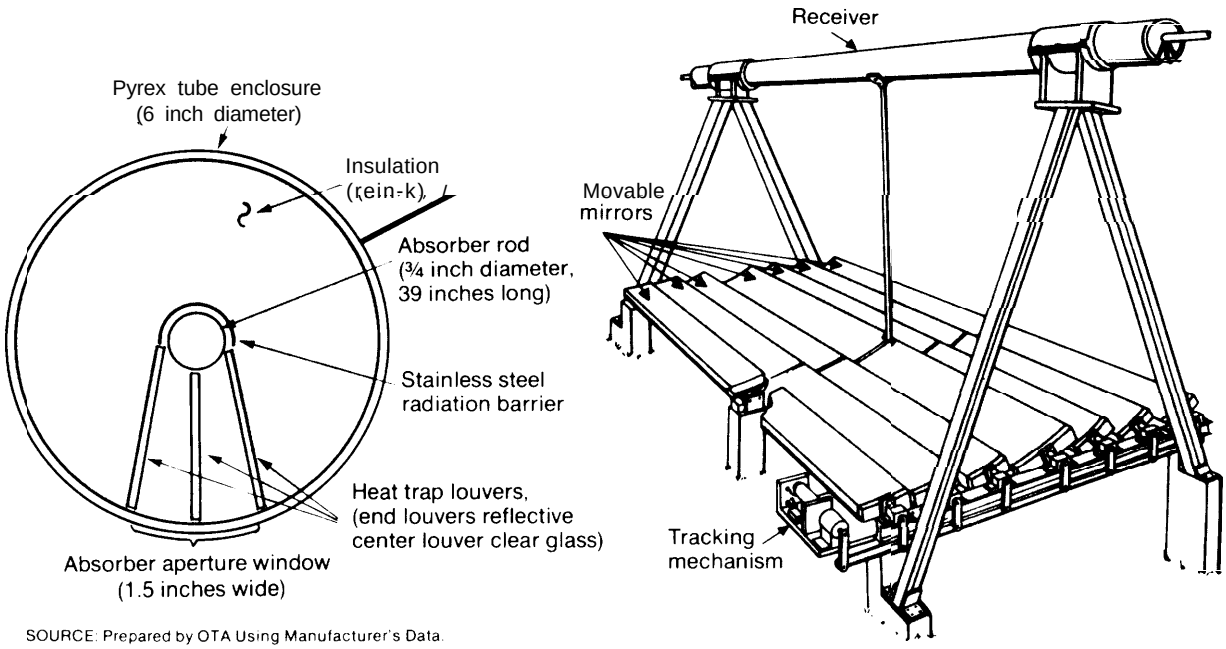

SOURCE: Prepared by OTA Using Manufacturer's Data.

er is designed for hi gh performance at even higher temperatures. AAI is also interested in this concept and has built a prototype.

TWO-AXIS TRACKING

Solar collectors capable of producing temperatures above about 3000 C must be able to track the Sun by rotating about two independent axes. The most common systems are the equatorial and the azimuth mount. The equatorial mount is advantageous because all tracking during the day follows one axis (parallel to the Earth's axis of rotation). The change in the Sun's elevation is only a maximum quarter-of-a-degree per day and can be compensated for by a simple adjustment of the declination axis every few days. All other tracking systems require active tracking along both axes during the day. The azimuth mount is often used because of its mechanical simplicity; this mount, for example, is used for most radar dishes and for naval artillery. The azimuth axis is vertical and the altitude or elevation axis follows the Sun's movement from horizontal to vertical.

Two-dimensional concentrators fall into three classes:

1. Systems which focus light on a small-point receiver which moves with the optical system.
2. Heliostat systems, where a large field of individual mirrors focus on a central receiving tower
3. Stationary concentrators with tracking receivers.

Collector and Receiver Both **Tracking**

Most early two-axis tracking systems used a single large reflecting dish which looked much like a radar antenna. These systems may prove to be the most attractive in applications where there is an incentive to focus large amounts of energy on a single point (e g., where a small heat engine or sophisticated photovoltaic device is employed). In many applications, however, it is possible to use a number of smaller concentrating units focus ing light on a series of relatively small **receivers.** These small units typically are ganged together into a single tracking unit. Determining the optimum size of the individual concentrator device will require a substantial amount of engineering analysis for each application,

Ganged Concentrators.–Both mirrors and Fresnel lenses can be used in a ganged concentrator. Mirrors have the advantage of being less expensive per unit of aperture and do not experience chromatic aberation if used to produce high-concentration ratios. (Mirrors will probably be preferred in systems with concentration ratios greater than 500 **x).**[37] **37** The Varian Corporation has built a two-axis tracking device using an array of 7 rows of 17 parabolic mirrors each 25 cm (10 in) square, mounted on a single tracking platform (see figure VI 11-20). Each mirror provides a concentration of 1,000 **x .**[38]

MIT and the National Patent Development Corporation are doing research on a modular, mirror-concentrater/photovoltaic system in which the separate, round, parabolic mirrors are connected to a common tracking system (see figure VI 11-21). A small secondary mirror in front of each of the main mirrors reflects light back through a hole in each main mirror onto a solar cell. This reduces any shadows from the cell and cooling water pipes. A concentration ratio of 300-500:1 is felt to be optimum. The system is designed to produce both electricity from the photovoltaic cells and thermal energy from the liquids used to cool the cells. The company hopes to be able to sell a complete system of unspecified size for less than $5,000— a system which will last at least 10 years with minimal maintenance,

Fresnel lenses have the advantage of being somewhat less *sensitive* to tracking er-

---

[36] L W James (Varian), private communication, May 6,1976

[37] W R Lee (Swedlow, Inc), private communication, Nov 17, 1976

[38] L W James (Varian Associates, Baton Rouge, La), phone conversation, April 1976

[39] Washington Post, June 5,1976, p Al

Figure VIII-20.—The Varian Two-Axis Concentrator Using GaAs Photovoltaic Devices

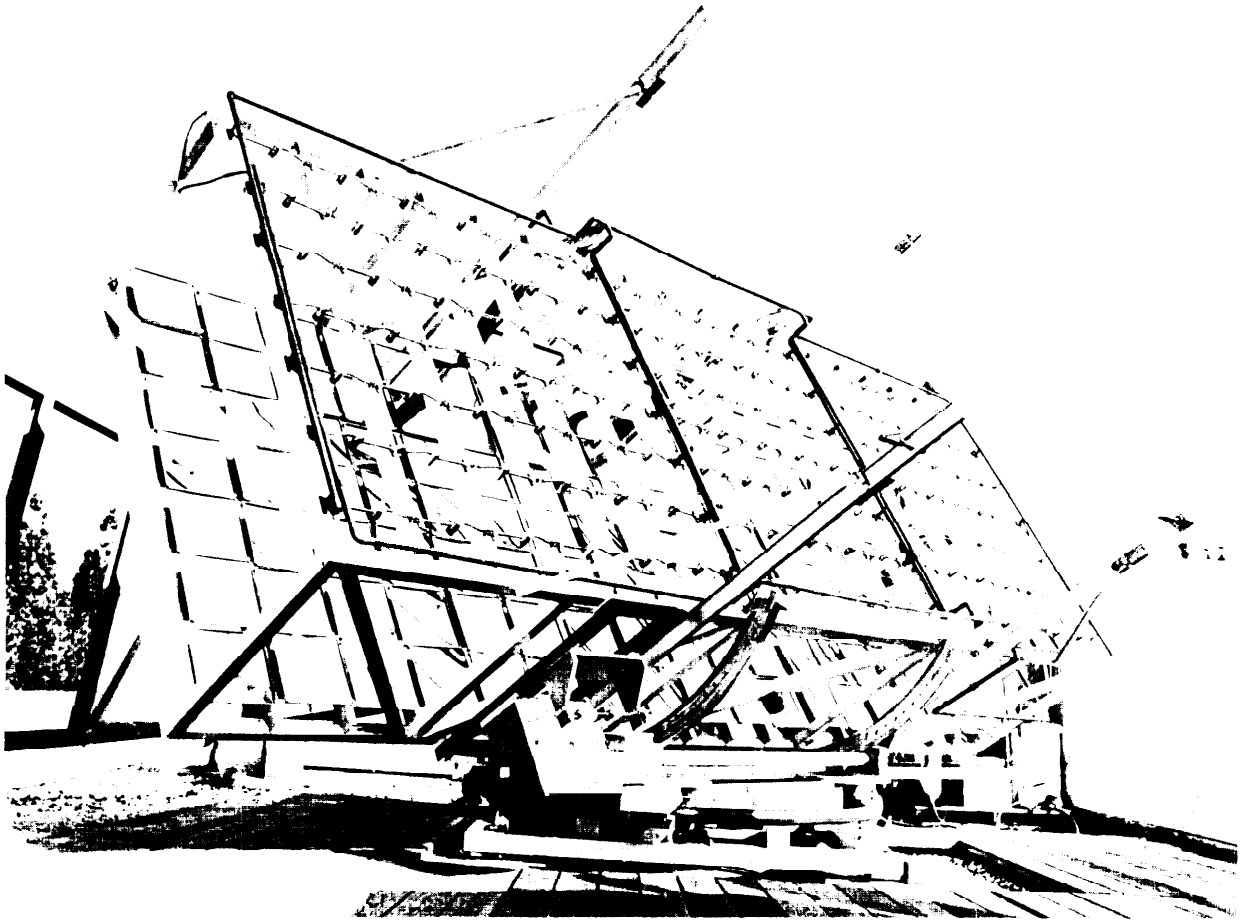

PHOTO Courtesy of The Varlan Corporation, 1977

rors than mirror systems, and they can be designed to provide a uniform intensity across the receiver surface. The lenses can be made from durable plastic materials and it may be possible to manufacture them very inexpensively in mass production facilities. The special designs required for solar applications would not add to the cost of manufacturing the systems. 40 [41]

The best material for Fresnels will probably prove to be some kind of acrylic plastic even though this material is considerably more expensive than glass. It is very difficult to cast glass with the accuracy and sharpness that is possible with acrylic, which is not as viscous as glass when it is cast, Acrylics can be made which can withstand outdoor climates for over 20 years."[42 43 44] Swed-

[40] W R Lee (Swedlow, Inc), private communication, Nov 17, 1976.

[41] L. W James, et al (Varian), "Performance of a 1-kW Terrestrial Array of AlGaAs/GaAs Concentrator Solar Cells, " 12th IEEE Photovoltaic Specialists Conference, Baton Rouge, La , Nov 15-18, 1976

[42] R P Falconer (Lectric Lites Co , V Pres), private communication, Oct 15, 1976

[43] W R. Lee (Swedlow, I nc), private communication, Nov 30, 1976.

[44] L G Rainhart and W. P Schimmel, Jr (Sandia Labs), "Effect of Outdoor Aging of Acrylic Sheet, " SAND 74-0241

Figure VIII-21 .—An MIT Design for a Small Two-Axis Tracking Unit

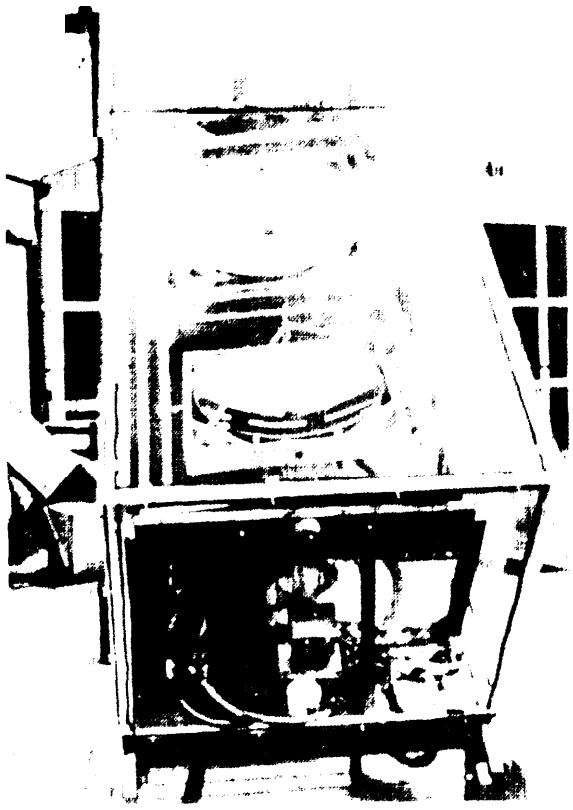

PHOTO: Courtesy of MIT, "Reports on Research," May 1976, Vol. 3, No. 8, p. 1

low, Inc., has estimated the price at which they could sell cast-acrylic Fresnel lenses at various production levels. These estimates appear in figure VI I I-22. Swedlow has invested about $200,000 in solar lens research at this writing, and the firm estimates that a large-scale production line could be operating in 22 months if a decision is made to initiate manufacture. 45

Sandia Laboratories, Albuquerque, has built a 1 kWe photovoltaic test bed using pressed-acrylic Fresnel lenses supplied by Fresnel Optics, Inc., of Rochester, N.Y. This collector consis ts of a checkerboard of **square Fresnel lenses mounted on the top surface of a flat box (figure VI 11-23.)**

A collector using Fresnel lenses in a design similar to the MIT device discussed previously has been designed for use on an experimental basis by the RCA Corporation (see figure VI 11-24). This kind of design has a relatively low profile and can be integrated into a house or building more easily than any other type of two-axis tracking system.

Large Paraboloid. -Large tracking parabolic dishes are commercially available but current commercial designs are much too expensive for any practical solar **energy system application.**

The Jet Propulsion Laboratory (JPL) of the California Institute of Technology has developed a conceptual design for a high-efficiency, low-cost paraboloidal solar powerplant (figure VII I-25). The reflecting surface is made of commercially available silvered mirrors which are curved slightly by glueing them to concave pieces of foam glass. These curved pieces are then mounted on a metal framework and all are aimed at a single focal point, The entire framework tracks the Sun.

The tracking paraboloid system is well suited for applications using a Stirling or Brayton engine and electric generator. JPL has estimated that it may be possible to mass produce and install these collectors for less than $120/m^2.[46] The mirror and foam glass surface cost about $20/m^2. This is admittedly optimistic since precision tracking radar dishes now cost about $322/m ^{2},[47] but the solar devices could be produced in much greater quantities and would not need to be as precisely constructed or as reliable,

[45] W R Lee (Swedlow, Inc), private commu nication, Oct 14, 1976

[46] MKSelchuk, eta1, *Solar Stir/ing Power Generation: Systems A nalysis and Preliminary Tests,* Proceed ings of the 1977 Annua I Meeting of the American Section of the International Solar Energy Society, Orlando, Fla , June 6-10, 1977, p 20-8

[47] Selchuk, op cit., p 20-9

Figure VIII-22.— Sales Price of Cast-Acrylic Fresnel Lens Versus Production Volume

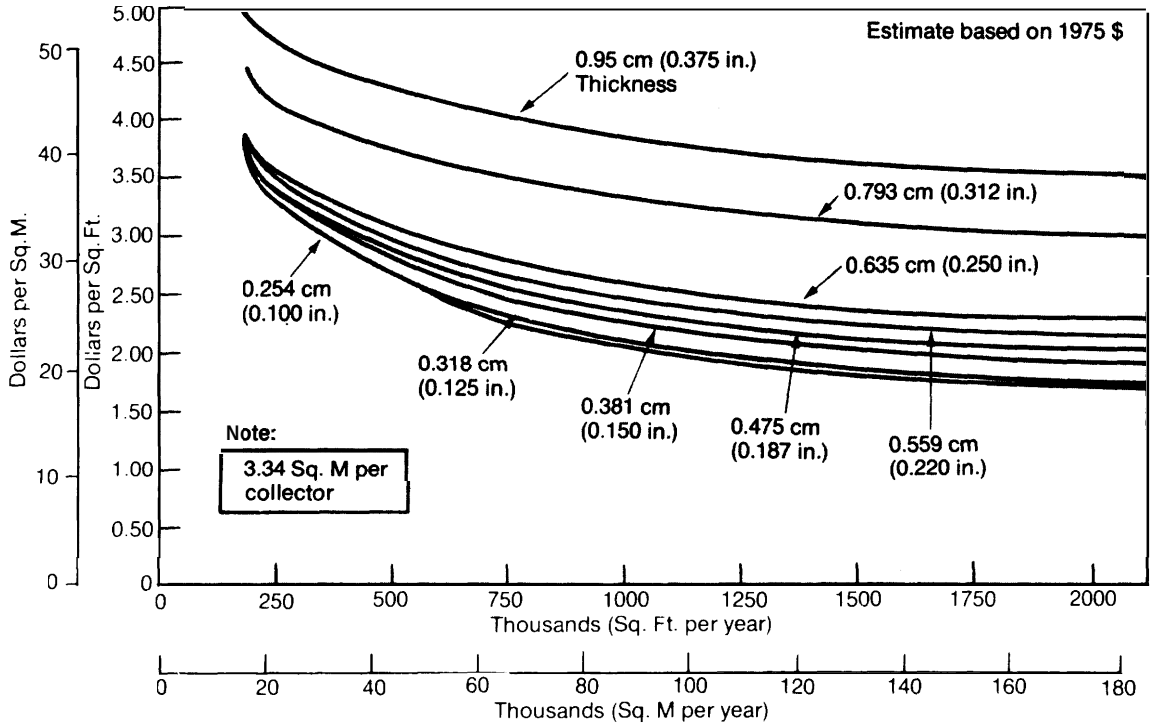

SOURCE *Unsolicited Technical* **Proposal** *for Cast-Acrylic Fresnel Lenses for Solar-Cell Energy Generator?,* Swedlow Report No 873, September 30 1976 Swedlow Inc Garden **Grove** CA pp 5-3

The **Carousel Collector. -Another approach to two-axis tracking is illustrated** in figure VI 1 I-26. **In this approach, a number of one-axis tracking parabolic troughs are mounted together in a platform which rotates to** follow the Sun. The system illustrated is mounted on tracks, but it is also possible to simply float the platform on a pond of water. " A simpler one-axis tracking system can be manufactured along the same lines by rigidly mounting the trough **concentrators on the rotating platform.**

Heliostat/Central Receiver

The heliostat/central receiver arrangement can be scaled up to very large sizes, although small systems may also be useful. Such a system has an advantage over most distributed collector field concepts in that the energy is transmitted to the central **receiver as light rather than through an expensive piping network as heat.**

Francia Solar Heliostat Tower.–Professor Francia of the University of Genoa has had a 100 kW_t solar steam-generating station operation near Genoa (S. Ilario), Italy, since 1967 (figure VI 11-27). All of the mirrors in the field are linked together and driven by a single pendulum clock. A joint venture of ANSALDO, S.A., a large Italian industrial organization, and Messerschmidt of Germany is now selling solar steam-generating systems of Francia's design. The Georgia Institute of Technology in Atlanta bought a 400 kW_t test facility of this design from ANSALDO. It began operating on the Georgia Tech campus in 1977.[49] In addition to the innovative linked-mirror field, the Francia design appears to have an unusually

[48] Solar Energy Digest (9)1 (1 977)

[49] S H Bomar (Georgia Institute of Technology), private communication, Nov 13, 1976

Figure VIII-23.— 1kW$_e$ Focusing Photovoltaic Test Bed at Sandia Laboratories, Albuquerque" 1 -square Foot Fresnel Lenses Focus on 2-in. -Diameter Solar Cells

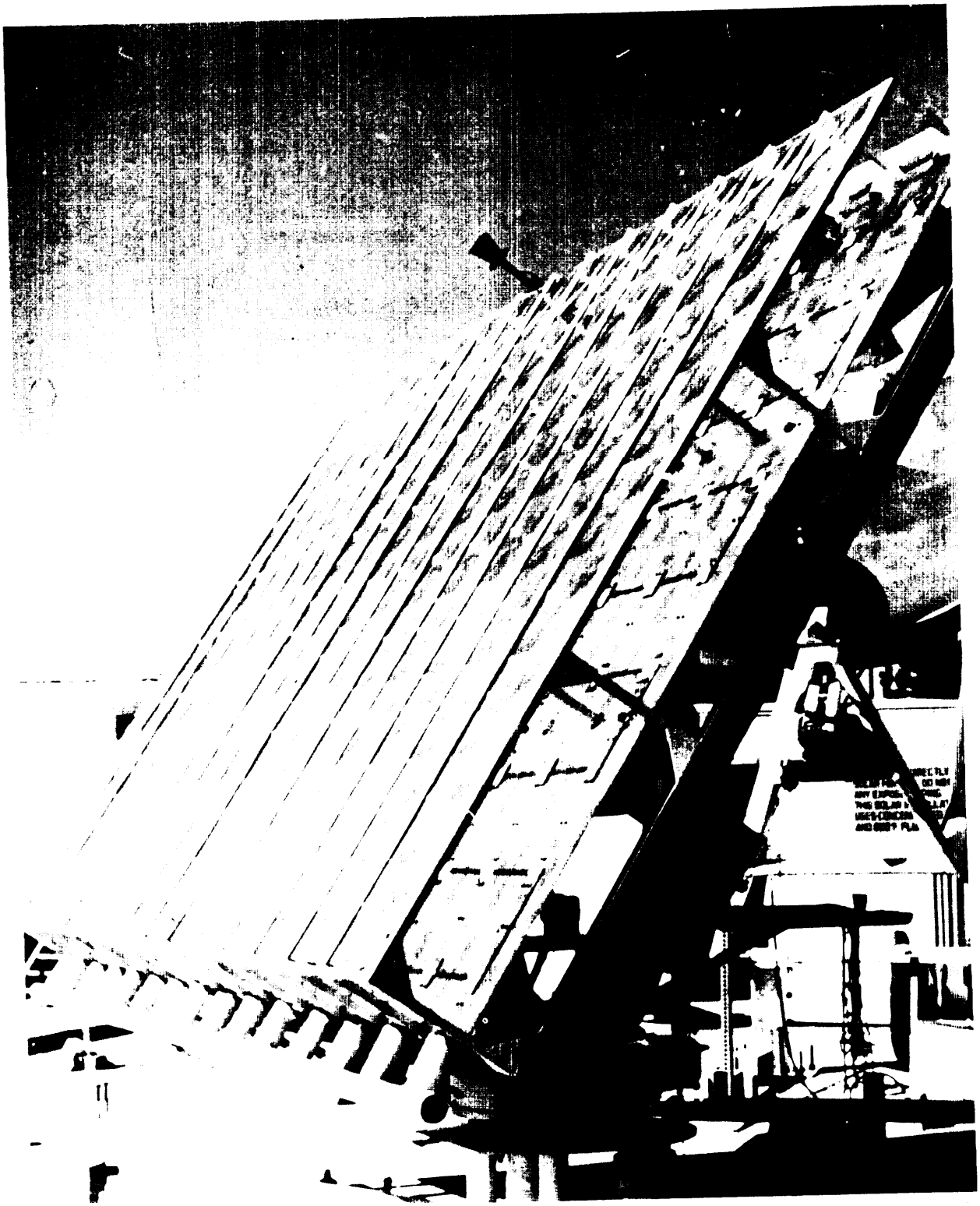

PHOTO Courtesy of Sandia Laboratories

Figure VIII-24.— RCA'S 300W$_e$ Photovoltaic Concentrator

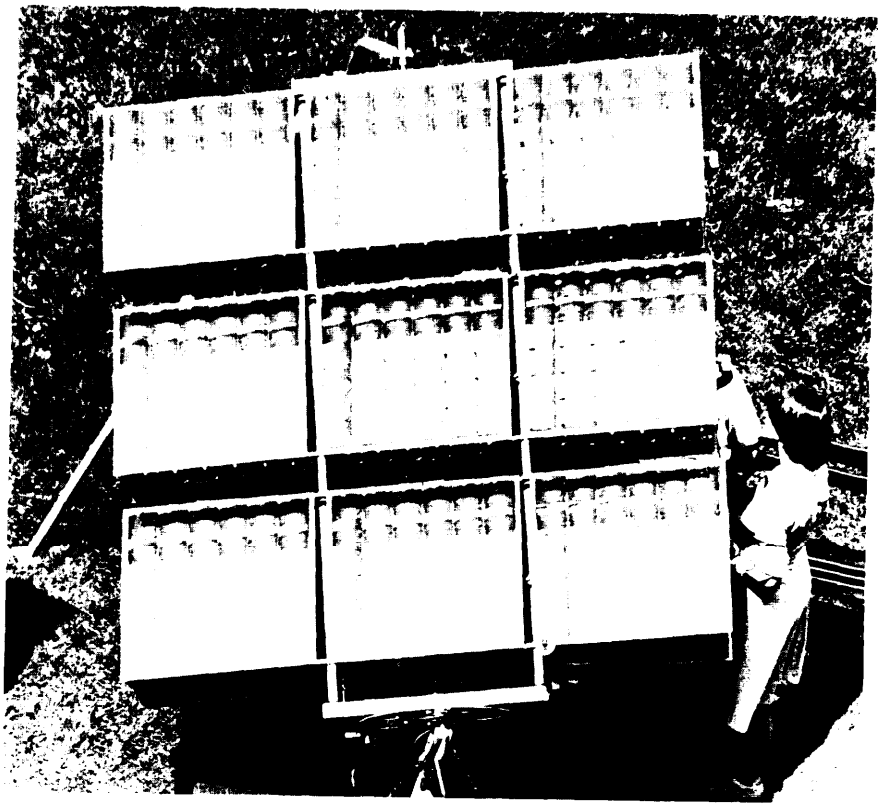

PHOTO Courtesy of RCA

Figure VI II-25 .—JPL Paraboloid Design With Stirling Engine at Collector Focus

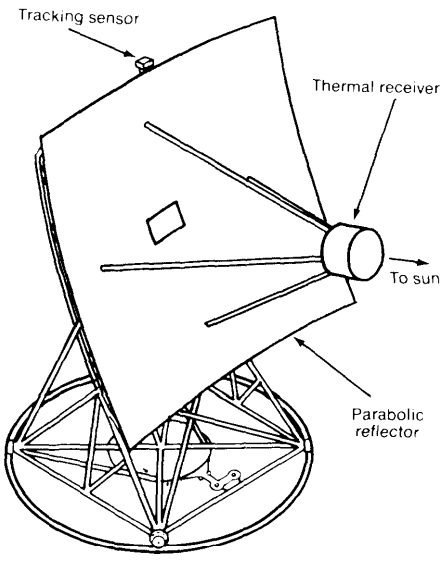

SOURCE Prepared by OTA using manufacturers data

SOURCE Prepared by OTA using JPL Information

high thermal efficiency, Professor Francia has reported a net collection efficiency of 73 percent.[50] Analysis at Georgia Tech indicates that even better results can be obtained by using molten salt or liquid metal instead of steam in this type of receiver.[51]

Francia's design has been used by Mitsubishi Heavy Industries, Ltd., of Hiroshima to build the 7 kW$_t$ test facility (shown in figure VI 11-28). Mitsubishi changed the heliostat design slightly. to allow the field to move its focus from one receiver tower to another. This improvement has been incor-

[50] G Francia, *Large Sea/e Central Receiver Solar Test Facilities,* Proceedings of the international Seminar on Large Scale Solar Energy Test Facilities, Las Cruces, N Mex , Nov 18-19, 1974, pp. 101-136, p 130

[51] R W. Larson (Professor, Georgia Institute of Technology), private communication, September 1976.

Figure VIII-26.— Sunpower Systems Solar Powerplant

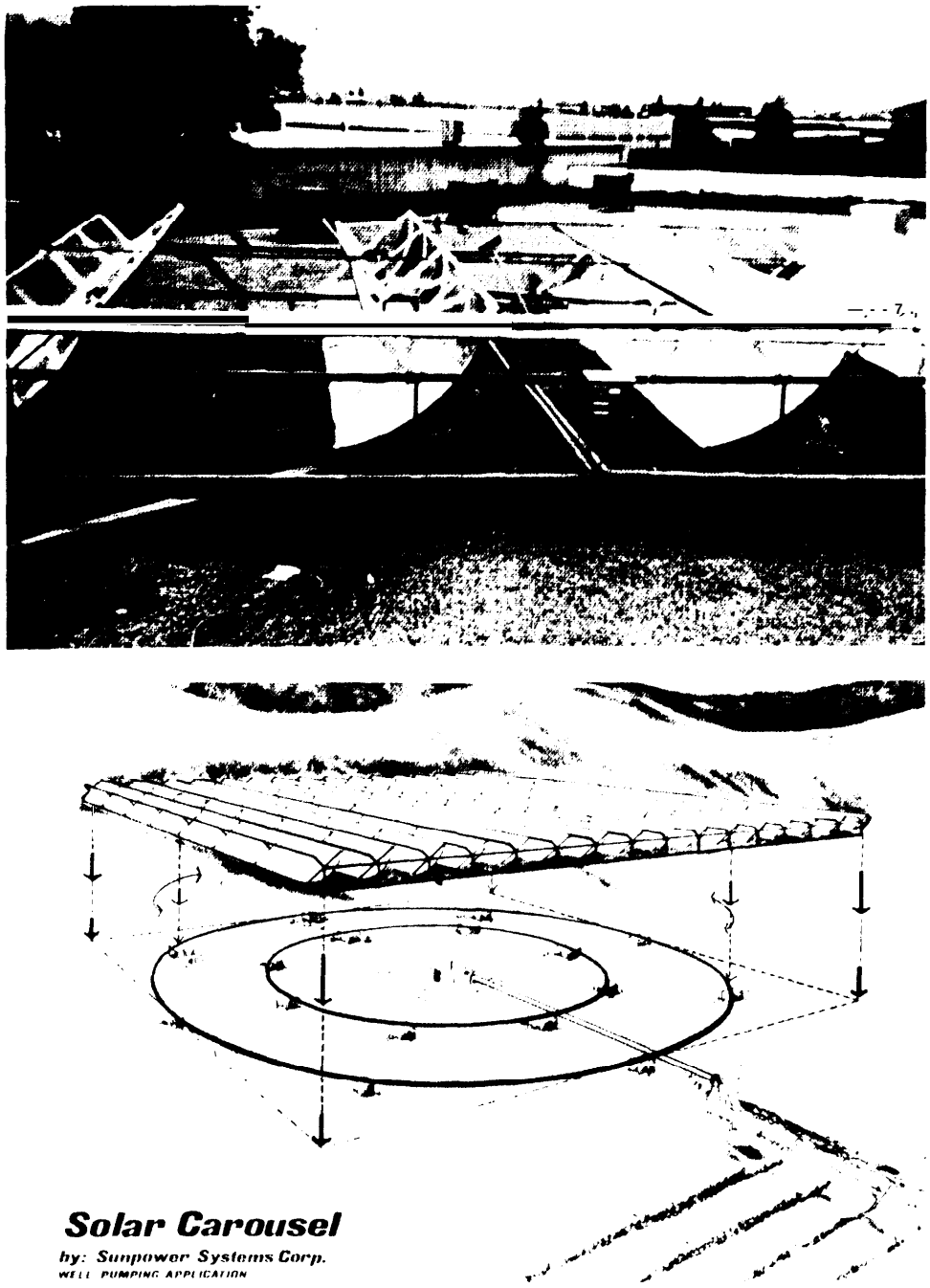

SOURCE Sunpower Systems Corp Tempe, Ariz

Figure VIII-27.—Francia 100 kW, Solar Powerplant (Closeup of heliostats **showing tracking linkage on back)**

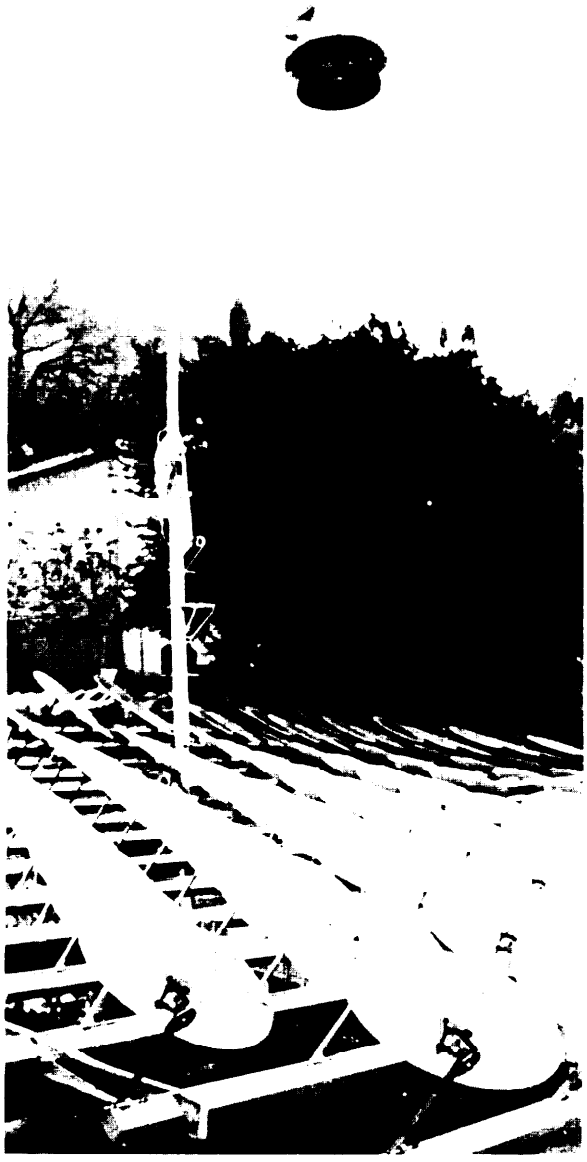

PHOTO Courtesy of Georgia Tech

porated into the test facility sold to Georgia Tech by ANSALDO. 52

Federally Sponsored Heliostat/Central Receiver Designs.–DOE's biggest solar investment in collector development thus far has been directed to the design of large heliostat/central-receiver electric powerplants designed primarily for desert regions. A number of variations on the basic design have been funded by DOE and the Electric Power Research Institute. Present plans call for a 100 MWe **pilot plant, preceded by a 5 MWe test facility at Sandia Albuquerque and a** 10MWe demonstration plant **at Barstow,** Cal if. (table VI 11-3).

Three companies designed complete systems, and Boeing contracted to design just the heliostats. The heliostats designed all have reflector areas of approximately 40 m^2, but designs differ considerably (figure VI 11-29). Boeing's design employs a thin layer of Kaptan stretched over a lightweight frame. The system is shielded from the weather with a transparent plastic bubble, The Honeywell design uses six 2.1 **x** 3.1 m (7 by 10 ft) mirrors mounted on a common turntable. The mirror mounts are aluminum "egg crate" with plastic filling, The Martin Marietta/Georgia Tech design uses 25, 1.22 by 1.22 m (4 by 4 ft) mirrors mounted on a common tracker. This array forms a crude parabola with a concentration ratio of approximately 5.3:1. The McDonnell Douglas/ University of Houston design uses a single 37 m' (400 ft^2) mirror mounted on large-cell honeycomb material.[53]

The three receiver concepts also differ considerably. Martin Marietta is designing a high-efficiency cavity receiver to face a heliostat field to the north. The Honeywell receiver accepts light through an opening in its bottom, and the receiver tower is located n the center of the heliostat field. McDonnell-Douglas is designing an open panel receiver to be located slightly south of the center of the heliostat field (figure VI **11-30).**

The Department of Energy has selected the McDonnell-Douglas design for its initial 10 MW demonstration. An artist's concept of the completed 10 MW facility is shown in

[52] G Beer and R Flores (ANSALDO S P A), private communications, Oct 28-29, 1976

[53] Data on these collectors was taken from *Survey of Several Central Receiver Solar Thermal Powerplant Design Concepts, J* PL, August 1975.

Figure VIII-28.— Mitsubishi (7 kW_t) Heliostat/Receiver Test Bed

Specifications

Energy Collected	about 7 kW_t
Mirror	0,3 x 0.4 m^2, 120 pieces
Heliostat	60 pieces
Tower Height	3m
Absorber	Cavity type 0.5 x O 6 m^2
Heat Carrier	Air. max 800° C

SOURCE K Yanagi (Hiroshima Technical Institute Mitsubishi Heavy Industries Ltd) Solar Energy Collecting Test Apparatus



Table VIII-3.—Characteristics of Competing Designs for the 10 MW_e Solar Central Receiver Powerplant

	Boeing	Honeywell	Mart in-Marietta	McDonnell-Douglas
Annual energy output (MWh)		4.3×10^4	3.4×10^4	3.6×10^4
Collector Subsystem				
Heliostat construction	metalized plastic reflector, aluminum and steel frame	glass mirror, low-profile steel frame, multifaceted, focused	glass mirror, steel frame, multifaceted, focused	glass mirror, steel frame, multifaceted, focused
Number of heliostats	3,146	2,320	1,718	2,350
Reflective surface per heliostat	29 m^2	40 m^2	37.2 m^2	30.8 m^2
Total area reflective surface	91,234 m^2	92,800 m^2	63,866 m^2	72,380 m^2
Field size		308 m radius	565 m x 565 m	527 m x 527 m
Receiver subsystem				
Receiver type		vertical cavity	horizontal cavity	external absorber
Tower height		146 m	137 m	101.4 m
Receiver working fluid		water/steam	water/steam	water/ steam
Storage subsystem				
Storage mechanism		latent heat	sensible heat	sensible heat
Storage media		salts	HITEC/hydro-carbon heat transfer fluid	rocks/ hydro-carbon heat transfer fluid
Electrical generation subsystem				
Turbine rating		15 MW	12.5 MW	15 MW
Turbine fluid		steam	steam	steam

SOURCE Department of Energy

figure VIII-31, and construction of McDonnell-Douglas heliostats or a 5-MW system is shown in figure VIII-32

Stationary *Concentrator/Tracking Receiver*

This concept uses a fixed-mirror/moving-receiver system with two dimensions of concentration. A section of a sphere made from mirror surfaces produces a radial line-focus pointing at the Sun (figure VI **11-33).** Only the receiver pipe moves to follow this line of high-intensity sunlight around the inside of the stationary dish. Because the dish does not track, this system collects much less light in the early mornings and late afternoons than tracking dishes. Its success will depend on whether initial and operating costs will be sufficiently below the costs of tracking dishes to compensate for its disadvantages.

At least three organizations are currently working on this concept— Environmental Consulting Services, Inc., of Colorado, E-Systems Garland Division in Texas, and C.N.R.S. (the French national petroleum company). E-Systems is a large, high-technology company which has built and installed dozens of fully tracking parabolic communications dishes and also refinished the huge, stationary spherical radiotelescope reflector at Arecibo, Puerto Rico. As a result of the firm's experience with both types of collectors, it considers the fixed-sphere design a more economical solar collector even when the reduced performance is taken into account. Smaller collectors can be integrated into a building's roof, and larger dishes could be mounted in an excavation to serve several buildings, a factory, or a community.

Figure VIII-29.– Pilot Plant Heliostat Concepts

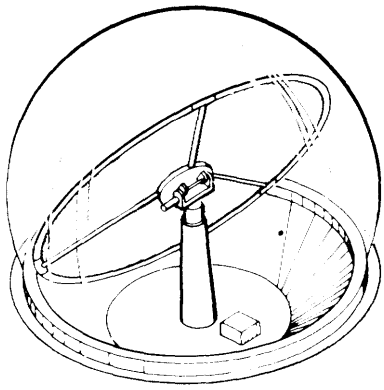

Boeing

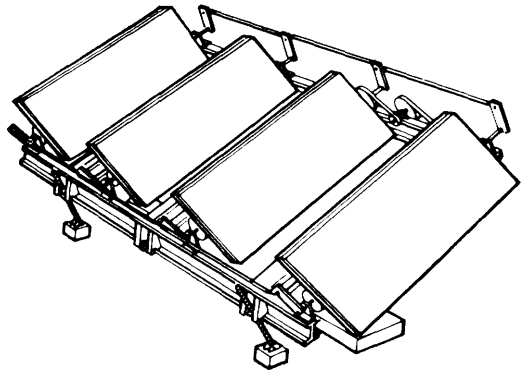

Honeywell

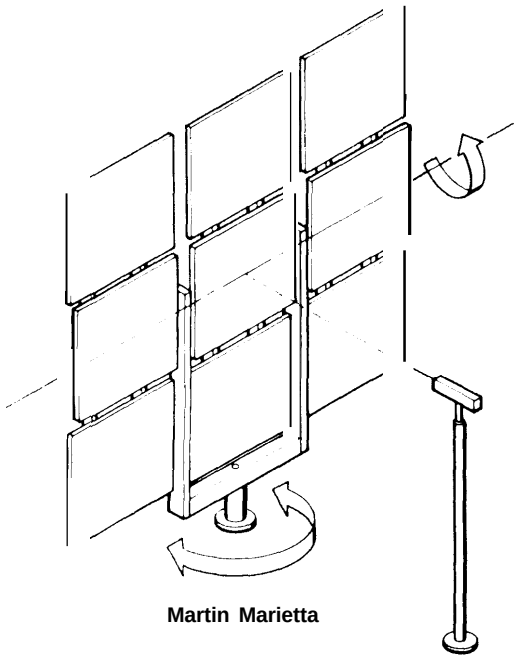

Martin Marietta

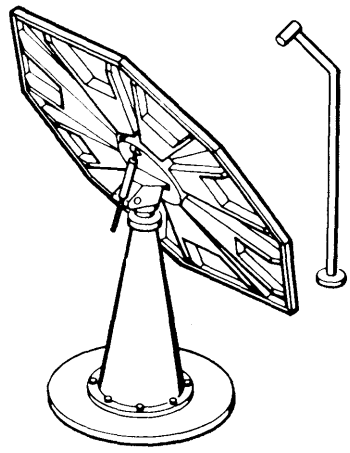

McDonnell Douglas

SOURCE Prepared by OTA using manufacturer's data

Figure VIII-30.— Pilot Plant Receiver Concepts

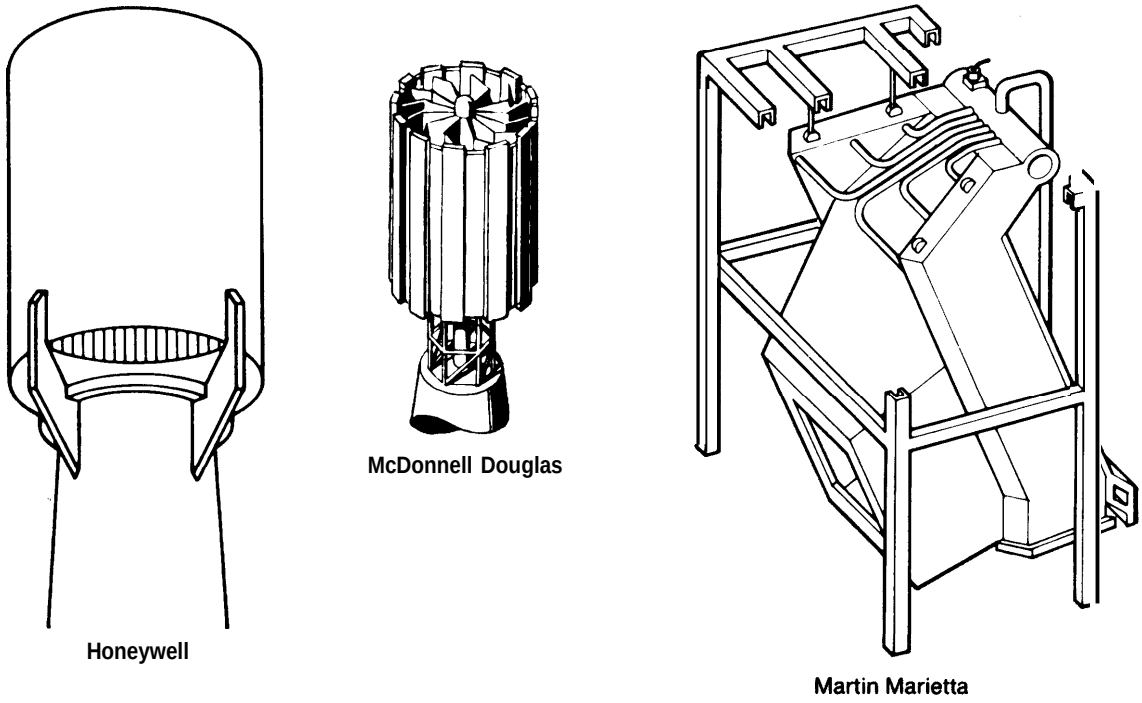

SOURCE Prepared by OTA using manufacturers data

Figure VIII-31 .—McDonnell Douglas 10-MW Pilot Plant Design. The Heliostat Field Surrounds the Thermal Storage (Circular Tank), Tower, and Electrical Generation Subsystems. Note the Octagonal Shaped Heliostats

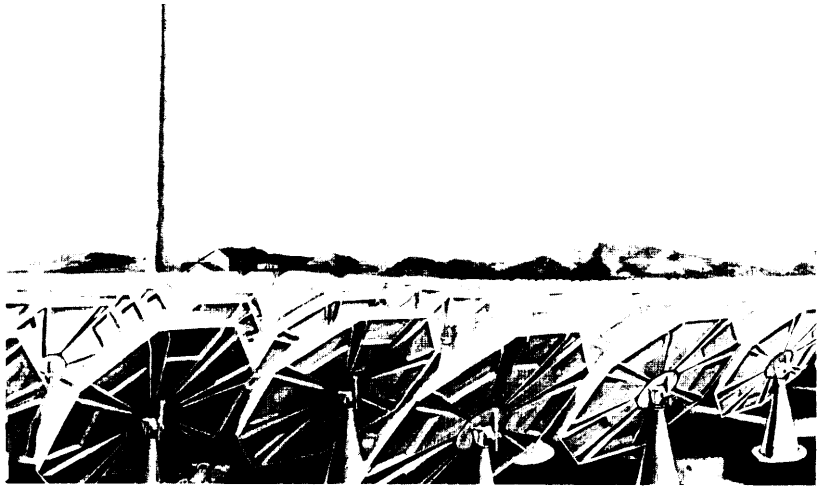

Figure VIII-32. —The 5-MW Central Receiver Demonstration Under Construction in Albuquerque, N. Mex.



Photograph by John Furber

Figure VIII-33. —Cross-Section of Stationary Hemisphere Concentrator

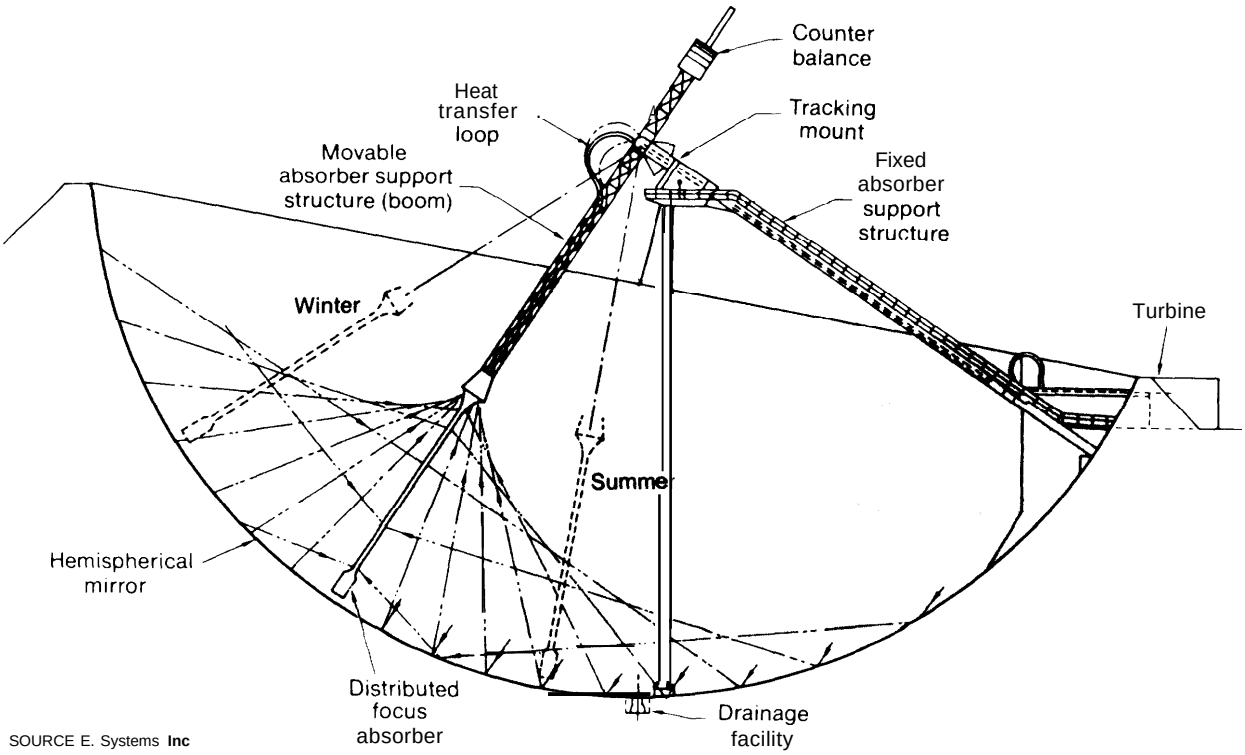

SOURCE E. Systems Inc

ENVIRONMENTAL IMPACTS

The two largest environmental effects of the manufacture of solar collectors result from the emissions associated with the energy generated to manufacture the devices, and the impact of the collectors on land use in cases where the collectors cannot be integrated into the roof, walls, or immediate landscape of a building. These problems are discussed in some detail in chapter VI 1. There will also be a number of occupational health and safety issues associated with the manufacture of specific collector designs,

WORKING FLUIDS

Some of the chemicals used in solar domestic water heaters to slow corrosion in the collector and to prevent the working fluid from freezing can be harmful if the collector fluid leaks through a heat exchanger and mixes with the hot-water supply. I n most regions, double-wall heat exchangers are required by local codes to protect against accidental leakage when potentially harmful chemicals are used. A lethal dose of ethylene glycol which is commonly used as an antifreeze in collector fluids is about 100 gm (1.3 lb) for an average adult. About 1/2 liter (18 oz) of **the glycol-water mixture used** in typical systems would have to be ingested to obtain a lethal dose. It **is unlikely, however, that the heat exchangers would** leak so massively that undiluted collector fluid would appear in the hot tapwater without being detected. Chronic ingestion of small amounts of ethelyene glycol can, however, cause "moderately toxic systemic effects."[54]

Some of the working fluids proposed for use with higher temperature systems can also be caustic or toxic if leaks develop in the plumbing systems, but these chemicals would not come into close proximity to potable water.

Glycol and other heat transport fluids degrade, and must be replaced periodically. This disposal could also create environmental problems.[55]

MANUFACTURING HAZARDS

Many of the plastics being used or proposed for use in inexpensive solar collectors can create hazards for employees in plants manufacturing the materials, even though most of the plastics are not harmful after they are fabricated and units installed. Plastics are used in collector covers, Fresnel lenses, thin mirror surfaces, piping, and a variety of other places in solar systems. Most of these materials are manufactured in substantial volume today and the solar industry would only have the effect of increasing the number of persons exposed to any risks that may now exist. None of the materials described below are uniquely required for the manufacture of solar collectors. If it is determined that any of the materials now in use create unacceptable environmental hazards, substitutes could undoubtedly be found.

In simple flat-plate collectors, thin strips of Styrofoam or similar materials are often used as insulation or backing; these compounds contain styrine, which the EPA classifies as a suspected carcinogen. Some silicone elastomers and polysulfide-based compounds are used as sealants in solar collector units; silanes, contained in the silicone elastomers, are considered moderately to highly toxic during the manufacturing process. Organic sulfides, compounds found in polysulfide-based materials, can cause an acute reaction that could cause a person to become unconscious after one alcoholic drink.

Urethanes are contained in polyurethane foams, which are often used as insulation in

[54] J. G. Holmes, "Environmental and Safety Implications of Solar Technologies, " ISES 1977 meeting, p. 285

[55] J G. Holmes, op. cit

plumbing connected to solar collectors. EPA suspects that urethane is a carcinogen.

The transparent covers used on flat-plate collectors are often made of acrylic plastics or plastic films such as Mylar, Tedlar, Kynar, Korad, and Teflon. Some plastics contain methyl methacrylate, which is considered to be moderately toxic by the EPA. Others contain fluorocarbons which are only slightly toxic, but can be an environmental problem. (See the discussion of fluorocarbons in chapter VI 1.)

Concentrating lenses and reflecting mirrors are generally acrylic-based plastics, which are considered moderately toxic. And coatings or encapsulant on flat-plate solar cells may be made from plastic-based films, which contain melamine, a moderately toxic material.

Vinyl chlorides are used extensively in the manufacture of a number of inexpensive collectors. Unfortunately, vinyl chlorides (along with other plastics) cause disposal problems and can be hazardous. The materials are not biodegradable, and they may produce toxic fumes if burning is used as a means of disposal. Research is underway to develop biodegradable plastics to help alleviate the plastic disposal problem.

COLLECTOR COSTS

FOB COLLECTOR PRICES

Unless otherwise noted, the collector prices cited in this chapter (including those shown in tables VII I-4 through VI 11-8) are FOB factory prices and do not include shipping or installation. Estimates of collector installation costs vary greatly (see discussion in volume **11,** chapter IV). Table VII I-9 contains an estimate of installation costs which may be obtainable in a mature market.

In a few cases involving larger systems, the companies indicated that they would install only the entire system and would not sell collectors separately, Where a price range is given, the lower price corresponds to a large order while the higher price corresponds to a small order. As noted, some manufacturers of flat-plate collectors, and the foreign distributors, will sell directly to individuals at these prices, Most, however, sell only to distributors, contractors, and architect/engineering firms,

All pricing data in this section are in 1976 dollars. Prices include headers, but exclude the controls, pumps, and interconnectin$_g$ pipe which most collectors require. Prices of tracking collectors include trackers, bearings, drive motors, and tracking controls, but exclude the cost of pumps, storage, and controls. Prices for collectors other than flat plates are in dollars per-square-meter of useful aperture, while flat-plate collector prices are per-square-meter of gross collector area. This gross area includes the area blocked out by the "window frame" and thus makes the flat plates appear a bit less costly than if they were priced on a useful aperture basis.

Each manufacturer was contacted directly and asked for quantity factory prices to contractors, excluding shipping, installation, and interconnecting piping. Since most collectors other than flat plate are not yet in mass production, manufacturers were asked for both present limited-production prices and what prices they projected in mass production. All prices were requested in constant 1976 dollars and all inquiries were made in 1976,

COLLECTOR SUMMARY TABLES

The following abbreviations are utilized in tables VII I-4 through VII I-8:

Sel. Surf. –Selective surface absorber ab-

Table VIII-4.—Stationary Flat-Plate Collectors

Company	Type/feature	Present wholesale price f.o.b. factory ($/m²)	Expected price when in mass product ion	Status	Design temperature
Thomason	flat plate trickle system 1 glass cover	32-43 to consumer		commercial	67° C
Sun works	flat plate sel. surf. 1 cover, glass	85-114	about same	commercial product ion	57 °-97"c
PPG	flat plate (opt. sel. surf.) 2 glass covers Al roll-bond (opt. Cu roll-bond)	80-107	same	commercial mass product ion	57°-97 "c
Reynolds Alum inure	flat plate (opt. sel. surf.) 2 Tedlar covers	54-65	same	commercial	57°-97 "c
N. V. Philips	Mark II Al or Cu roll-bond covered with evac. tubes heat mirror	—	$118	R&D	57 °-167°C
Unitspan	Cu tube and sheet 2 glass covers	86-92 to consumer	about same	commercial	57 °-97° C
Honeywell/ Lennox	flat plate Cu tube, steel sheet, 2 etched AR glass covers set. surf.	**145** or less	less	commercial	57 °-97°C
Calmac Manufacturing Corp.	Flexible mat o black EPDM tubes, 2 fiber-glass covers.	35-44 (Retail price; some on-site fabrication required)	about **same**	commercial mass production	57°-820°C

SOURCE Prepared by OTA using manufacturer's data

Table VIII-5.— Foreign Stationary Collectors on U.S. Market

Foreign company	Country	U.S. Distr.	Type	Present whole-sale price f.o.b. U.S. distr. ($/m²)	Design temperature
Miromit	Israel	American Heliothermal Corp.	flat plate 1 glass cover sel. surf. steel tube sheet	119-180	57 °-97°C
SAV	New Zealand	Fred Rice Product ions, Inc.	cylindrical collector incorporates storage	500	57°-97°C
Amcor	Israel	Sol-Therm Corp.	flat plate 1 glass cover steel tube & sheet	119-147	57°-970°C

SOURCE Prepared by OTA using manufacturer's data

Table VIII-6. —Stationary Tubular and CPC Collectors

Company	Type/feature	Geometric concentration ratio	Present wholesale price f.o.b. factory ($/m²)	Expected price when in mass production	Status	Design temp.
Owens-Illinois	evac. glass tubes sel. surf. on glass inner tube. White reflector	—	$215 (array aperture excl. headers and end caps)	**107-130**	pilot prod. demon. & testing	97 °-147° C
KTA	Cu absorber in glass tube. Half silvered	—	**85-104**	**58-80**	commercial product ion	57 °-97°C
Philips	Mark I evac. glass tubes half silvered; heat mirror coating	—	—	129	R&D	57°-167°C
General Electric	evac. glass tubes sel. surf. stationary external mirror	—	—	48-81	pilot product ion	57 °-167°C
Steelcraft, Inc.	alzak mirror CPC evac. glass tube/ sel. surf. receiver glass cover	—	269 (end of 1976) (excluding rack)	161-215 (end of 1977) (excluding rack)	commercial production (end of 1976)	204° C
M-7 International	solid plastic CPC for solar cells	5	—	only slightly more expensive than conventional solar cell packaging	**have** prototype; need capital for tooling	electricity

SOURCE Prepared by OTA using manufacturer's data

sorbs light well **but does not radi** ate **heat as well.**

Flat Plate— Flat-plate solar collector.

Heat Mirror— Selective heat mirror coating on **transparent cover allows sunlight to enter but reflects back infrared heat trying to escape.**

Opt. —Optional; available at extra cost.

Al — Aluminum.

Cu —Copper.

CPC– Compound parabolic cross-section concentrating solar collect**or.**

Evac. – evacuated.

AR – Antireflection coated.

COLLECTOR PERFORMANCE

The only accurate test of the value of a collector is the amount of useful output which it can provide per dollar of life-cycle investment, Unfortunately, there is no simple way to determine this useful output since the useful work done by a collector depends on the load, the quantity and quality of sunlight which is available, the size and type of storage devices used, local temperatures and wind velocities, and correlations between energy demands, weather, and available sunlight: a system which operates effectively in a home-heating system in Albuquerque may be extremely inefficient connected to an air-conditioner in Boston.

Table VIII-7. —One-Axis Tracking Collectors

Company	Type/feature	Geometric concentrate ion ratio	Present wholesale price f.o.b. factory ($/m²) (incl. tracker)	Expected price when in mass production	Status	Design temperature
Albuquerque-Western Inc.	parabolic trough tedlar window Cu pipe	20	**48-51** (incl. 250 tracker to drive 20-28 troughs)	(developing advanced design)	commercial product ion	32°-1OO°C
Beam Engineering	**parabolic trough**		235 or less	"much less"	commercial product ion	93° C
Sandia Labs	parabolic trough evac. glass tube/ sel. surf. abs.		(see Acurex)	80% learning curve to very low price	demonstrate ion	317°c
AAI	fixed trough; tracking receiver	~ 8	—	54-65 w/roof cred. or 86-97 retrofit	R&D	117°c
General Atomic co.	fixed stepped trough; tracking receiver	60	—	(installed)	R&D	497° C
Northrup, Inc.	linear Fresnel lens; sel. surf. on Cu absorber	~ 10	**133-180**	(advance design)	commercial product ion	93° C
Suntech Systems, Inc.	linear heliostat	40	215-270	46-108	prototype testing	177°-317°C
Itek	linear heliostat linear cavity receiver		—	102	R&D	537° C
Acurex Corp. (6' wide)	parabolic trough anodized Al mirror glass tube sel. surf. absorber	58	160-240	less	commercial product ion	60°-31 1'C
Acurex Corp (4' wide)	(see above)		140-210	86	commercial product ion	600-1 77"C
Solartec Corp.	parabolic trough anodized Al mirror		100-172	about same	commercial product ion	204° C
Scientific Atlanta	(see Gen. Atomic) evac. glass tube/ set. surf. absorber glass mirror		145-161	about same	commercial product ion	204°-326°C

SOURCE Prepared by OTA using manufacturer's data

It is only **possible to evaluate a collector accurately by examining its performance as a part of an integrated system operating to serve a particular building in a specific geographic area.** For this reason, primary attention in this report has been directed to evaluating the performance of integrated systems.

Evaluating the performance of integrated systems requires a technique for computing the amount of output which can be expected from a collector under different conditions. The calculations used to perform this analysis are explained in some detail in the appendix to this chapter. The basic approaches to the analysis of collector per-

Table VIII-8.—Two-Axis Tracking Collectors

Company	Type/feature	Geometric concentration ratio	Present wholesale price f.o.b. factory ($/m²) (incl. tracker)	Expected price when in mass production	Status	Design temperature
ANSALDO/ Messerschmidt	ganged kinematic heliostat /tower	250-500	?	?	ready for order	600° C
E-Systems, Inc.	fixed dish tracking receiver		—	50-53/m² installed	R&D	260° C
Sandia Labs	multiple Fresnel lens w/solar cells acrylic lens	50-100	*224* (w/o cells)*	(w/o cells)	prototype	*27°-100°C* & electricity
JPL	parabolic dish 9.75 m square glass mirror	1000	—	115	R&D	815° C
Varian	multiple parabolic dishes w/solar cel ls	1000	*650-1 ,000' (w/o* cells)	very low	R&D	27°-1OO°C & electricity
DOE contractors	central power station, helio-stat/tower		437-492/m² installed govt. demo)	70/m² heliostats 14/m² tower receiver		477° c
ANSALDO/ Messerschmidt	parabolic dish 832 m² 100 kWe		1,800	less	ready for order	550" C
National Patent Development	ganged glass parabolic dishes w/solar cell	300-500	—	7	R&D	*27°-100°C* & electricity
ANSALDO/ Messerschmidt	Heliostat /tower 5MWth/1MWe		385 (incl. tower& boiler)	less	ready for order	600" C
Sun power System Corp.	parabolic/trough carousel	96	175	about same	commercial product ion	500-2600C

" Estimated based on laboratory prototype excluding design and tooling costs
SOURCE Prepared by OTA using manufacturer's data

formance will be explained briefly in the following section and some general conclusions will be drawn about the advantages and disadvantages of the major categories of collector designs.

The next two sections examine the effects which are most important in determining collector performance and a final section of this chapter compares the performance of five generic types of collectors operating in the four cities examined in this study.

THE ENERGY AVAILABLE FOR COLLECTION

The amount of light energy which ultimately reaches the receiver of a collector depends on two things:

1. The quantity and quality of the sunlight which reaches the Earth's surface, and
2. The tracking geometry of the collectors,

Table VII-9.—Assumed Collector Installation Costs for Various Collector Configurations Excluding Overhead and Profit

Collector configuration —Components of installation cost	Installation cost in $/m² (Cost components)	Total
Air-cooled photovoltaics lying on roof		10.07
—install collectors	(8.07)	
—wiring	(2.00)	
Flat array lying on roof		18.40
—install collectors	(16.40)	
—wiring	(2.00)	
Roof replacement with air-cooled photovoltaics		1.54
—install collectors	(8.07)	
—roof credit	(- 8.53)	
—wiring	(2.00)	
Roof replacement with flat array		9.87
—install and plumb collectors	(16.40)	
—wiring	(2.00)	
—roof credit	(- 8.53)	
Air-cooled photovoltaics on frames on roof		27-47
—install collectors and frames	(10-30)	
—frame materials	(15.39)	
—wiring	(2.00)	
Flat array on frames on roof		27-57
—install and plumb collectors and frames	(10-40)	
—frame materials	(15.39)	
—wiring	(2.00)	
Tracking collectors on roof		20-40
—install and plumb collectors and frames	(20-40)	
Air-cooled photovoltaics on frames in field		31-51
—site preparation	(.90)	
—foundations	(5.02)	
—install collectors and frames	(10-30)	
—frame materials	(15.39)	
Flat array on frames in field		41-61
—site preparation	(.90)	
—foundations	(5.02)	
—install and plumb collectors and frames	(20-40)	
—frame materials	(15.39)	
Heliostats and air-cooled tracking PV in field		16-36
—site preparation	(.90)	
—foundation	(5.02)	
—install collectors and frames	(10-30)	
Plumbed trackers in field		26-46
— site preparation	(.90)	
— foundations	(5.02)	
— install and plumb collectors and frames	(20-40)	
Air-cooled photovoltaics raised on columns		37-57
—foundations	(5.02)	
—columns	(6.25)	
—install collectors and frames	(10-30)	
—frame materials	(15.39)	
Flat panels raised on columns		47-67
—foundations	(5.02)	
—columns	(6.25)	
—install and plumb collectors and frames	(20-40)	
—frame materials	(15.39)	
Heliostats and air-cooled tracking PV raised on columns		21-41
—foundations	(5.02)	
—columns	(6.25)	
—install collectors and frames	(10-30)	
Plumbed trackers raised on columns		31-51
—foundations	(5.02)	
—columns	(6.25)	
—install and plumb collectors and frames	(20-40)	

SOURCE: Prepared by OTA using manufacturer's data.

The Solar Resource

The amount of light which can be collected by a solar device on the Earth's surface is limited by the cycle of day and night, clouds, atmospheric turbidity, seasonal changes which result from the tilt of the Earth's axis of rotation (the axis tilts toward the Sun during the summer in the northern hemisphere and the elliptical shape of the Earth's orbit brings the Earth closer to the Sun during the winter) and atmospheric dust which may result from volcanic eruptions or local air pollution. It is also possible that there are long-term cycles in the amount of energy generated by the Sun itself, and there has been speculation that such cycles are responsible for cyclic ice ages and periods of severe cold which fall short of ice ages (such as the cold period which gripped Europe during the reign of Louis XIV].

There is very little information available about long-term changes in the amount of energy produced by the Sun or about long-term cycles in the net clearness of the Earth's atmosphere. **It has** been possible, however, to assemble continuous measurements of the intensity of energy reaching the Earth on a clear day from 1884 to the plesent by combining records taken at several U.S. sites. The result is shown in figure VIII-34. It can be seen that changes of 10 percent are typical, but that larger changes can result from major volcanic eruptions even though these explosions took place many thousands of miles from the site where the sunlight measurements were made. Following the explosion of Krakatoa, for example, the sunlight reaching the Earth fell by nearly 20 percent.

The variation in sunlight available for collection **in different parts of the United States is illustrated in figures VI 11-35 and 36.** These figures show the solar resource in two ways:

1. The total amount of sunlight falling on a horizontal surface (which includes both the energy received directly from the sun and the "diffuse energy" received by reflection from clouds and other particles suspended in the air), and
2. The "direct normal" radiation–the energy received by a collector which tracked the Sun's motion precisely, keeping the Sun perpendicular, or "norreal, " to the surface of the receiver.

Tracking systems which focus sunlight on a receiver can only make use of "direct normal" radiation. **It** can be seen that the basic solar resource varies by about 25 percent around the national average in June (which is the sunniest month in most climates) and by about 50 percent in December (which is typically the least sunny month). The pattern of distribution of direct normal radiation is somewhat unexpected since there seems to be more variation from east to west than from north to south. Thus, there is greater similarity between the amount of direct normal sunlight available in Fort Worth, Tex., and Columbus, Ohio, than there is between Fort Worth and western parts of Texas.

Several warnings are necessary before proceeding more deeply into an analysis of the availability of sunlight around the country. The data on which such analysis now must be based is of poor quality in most parts of the country; continuous records of direct normal radiation are almost nonexistent. (One of the primary criteria in selecting the cities used in this analysis was the availability of sunlight data.) Stations which measure direct radiation are located in three of the cities chosen (Albuquerque, N. Mex.; Blue Hill, Mass. —a town close to Boston; and Omaha, Nebr.). Even in these cities, however, complete records are difficult to obtain. Most information about direct normal radiation must be obtained indirectly by applyin$_g$ statistical 'techniques to measurements of the total amount of radiat;on reaching a horizontal surface. (These techniques are discussed in the appendix.) Another limitation of the analysis is that it used data taken in a single year— 1962 (1 963 for Boston). Better comparisons could be made if results were averaged over a number of years to eliminate unusual effects

Figure **VIII-34. —Variation of Direct Normal Component of Solar Radiation With Time**
Northern hemisphere values: typical of air mass = 1.5 100% corresponds to approximately 0.94 kW/m^2.
The names on the graph refer to major volcanic eruptions.

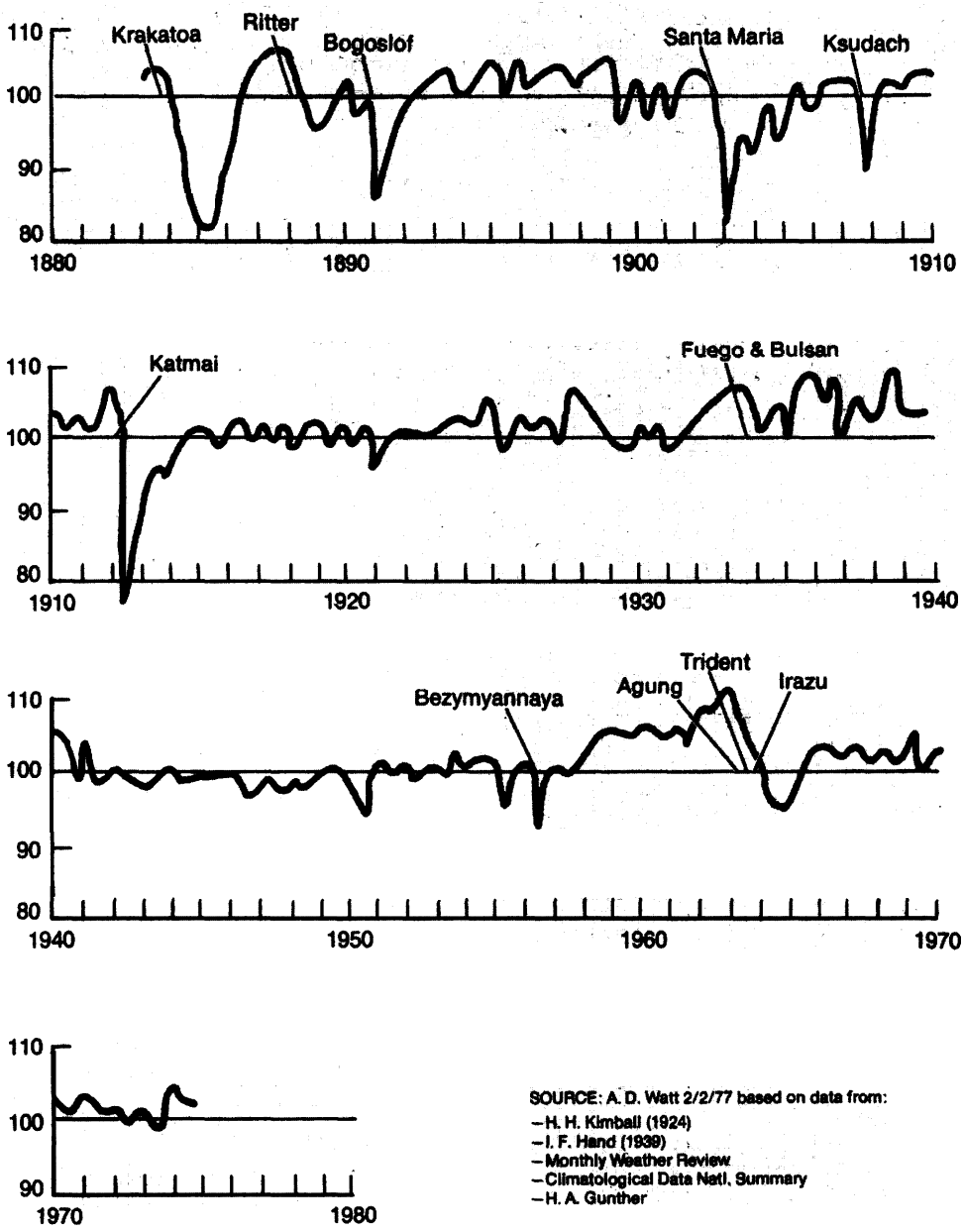

SOURCE: A. D. Watt 2/2/77 based on data from:
- H. H. Kimball (1924)
- I. F. Hand (1939)
- Monthly Weather Review
- Climatological Data Natl. Summary
- H. A. Gunther

Figure VIII-35.— Mean Daily Total-Horizontal Solar Radiation (kWh/m^2)

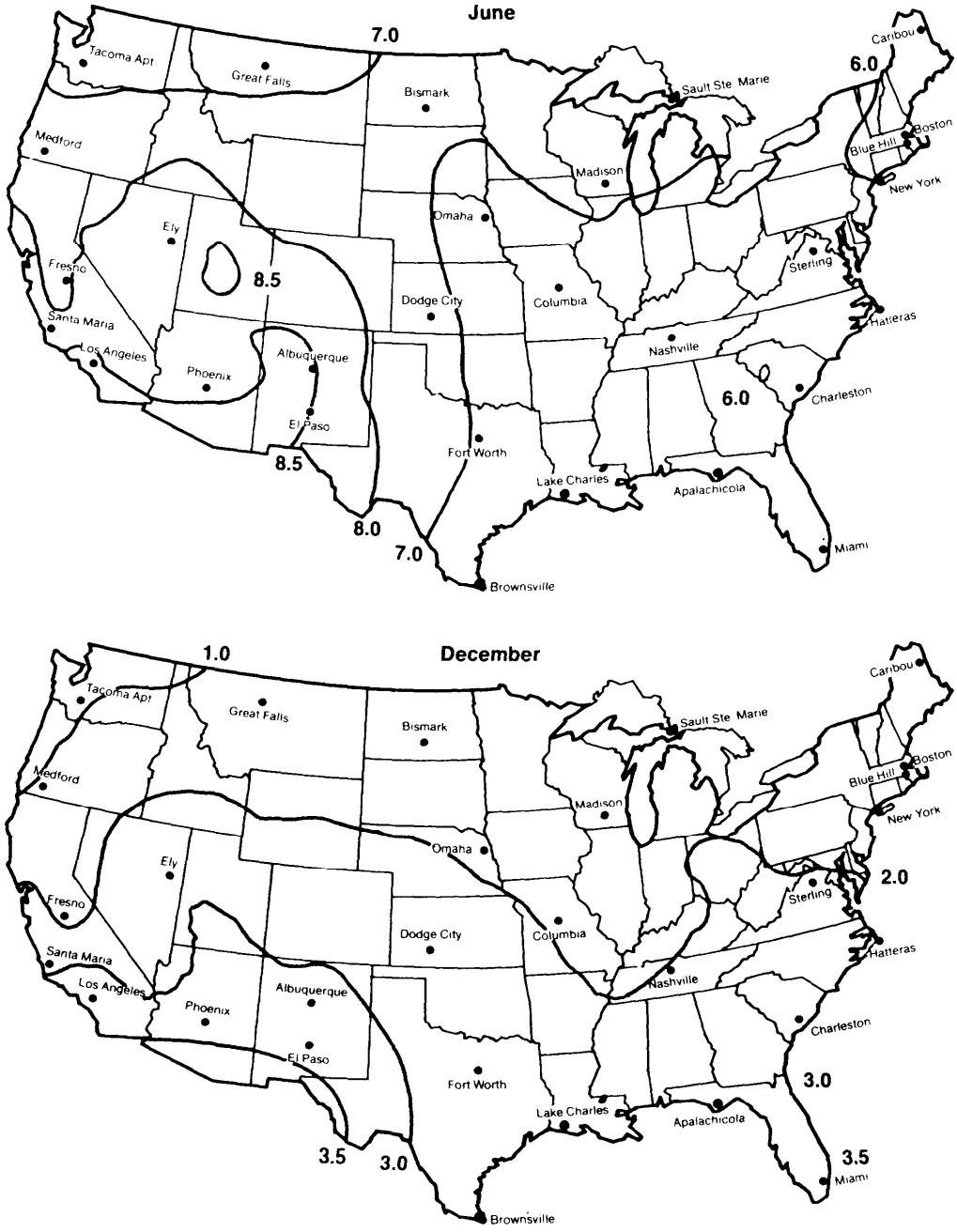

SOURCE: Boes, Eldon, et al., "Distribution of Direct and Total Solar Radiation Availabilities for the U.S.A." published by Sandia Laboratories (SAND76-0411) pages 19 & 25.

Figure VIII-36.– Mean Daily Direct-Normal Solar Radiation (kWh/m^2)

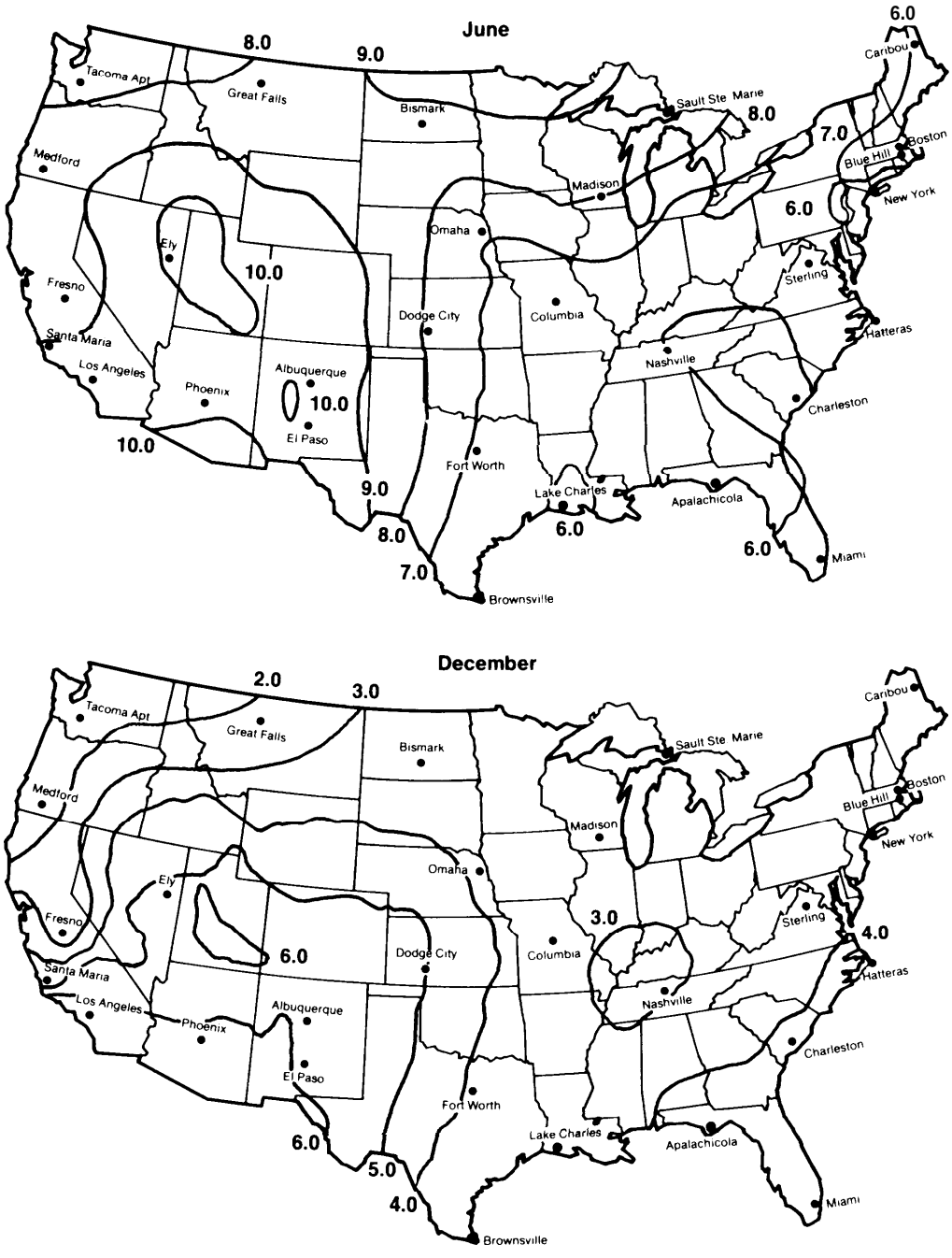

SOURCE: Boes, Eldon, et al. "Distribution of Direct and Total Solar Radiation Availabilities for the U.S.A." published by Sandia Laboratories (SAND76-0411), pages 19 and 25.

which may be due to weather patterns in any single year. A comparison between 1962 data and long-term averages given in the appendix indicates that, for example, in Omaha direct normal sunlight was about 13 percent below normal **in** 1962 while in Boston it was about 15 percent above average (see table **VII I-A-2).**

One of the limitations of the maps shown **in figure VI 11-35** is **that they seriously understate the radiation which is available** for a flat-plate collector installed in a northern latitude. An optimum collector is not horizontal but tilted at an angle close to the latitude angle, In northern climates, this optimum angle is quite far from the horizontal plane in which the sunlight measurements were made.

COLLECTOR TRACKING GEOMETRY

A comparison of the sunlight available for tracking and nontracking collectors is shown in figures VI **11-37** and **38** for the four cities examined in detail in this study. Figure VI **11-37 compares the energy available for collection by a perfect flat-plate collector (e.g., one with no thermal or optical losses) tilted at the local latitude angle with the energy available for a perfect, fully tracking collector (e. g., a fully tracking parabolic dish). The annual output of these collectors is summarized** in table VII J-1 O.

Albuquerque is the only city examined where the energy available for a fully tracking collector exceeds the energy collectable by a perfect flat-plate device. (It **will be seen later,** however, that when an analysis is done which includes the performance of real collectors, the ordering is usually reversed.) The difference between the solar resource **avail**able for the two types of collectors is, however, so small in the cities studied that it is perilous to make any kind of conclusive statement, particularly given the poor quality of the data on which these comparisons are based.

Figure VI 11-38 compares the solar resources available to a nontracking flat-plate and a fully tracking collector system with two other collector geometries: the heliostat system (in which an array of mirrors directs light to a central tower), and a one-axis tracking trough which rotates around a polar axis (an axis which points at the north star).

The heliostat system gathers less energy than other tracking devices because: 1) the heliostats are not turned to face the Sun directly (these devices must point in a direction between the Sun's direction and the direction of the receiver tower), and 2) because in the computation used to prepare the data shown, the heliostat devices were packed in a way that allowed some heliostats to be shaded during part of the day. This shading was somewhat greater than the shading which occurred with a comparable ground coverage ratio in a field of fully tracking dishes; it is necessary for a heliostat to have an unobstructed view of both the Sun and the receiving tower. This small disadvantage of heliostat systems may be compensated in cost savings when integrated systems are evaluated.

COLLECTOR LOSSES

Up to this point, the analysis has shown only the amount of energy which could be provided by perfect collectors with different tracking geometries. The energy provided by real collectors falls below this theoretical value because of imperfections in the optical systems, and because some of the collected energy is lost to the environment without doing useful work.

Optical Losses

Four types of losses decrease the optical efficiency of f tat-plate systems:

1. Reflection from glass or plastic covers is typically 8 percent for each cover used and is greater when the sunlight strikes the collector at an angle. Some thin-plastic films have lower reflective losses than glass. These losses can be reduced if antireflective coatings are used, but this adds to the collector cost.

Figure VIII-37.—Perfect Flat-Plate Collector Tilted at Latitude Angle and a Perfect Fully Tracking Collector

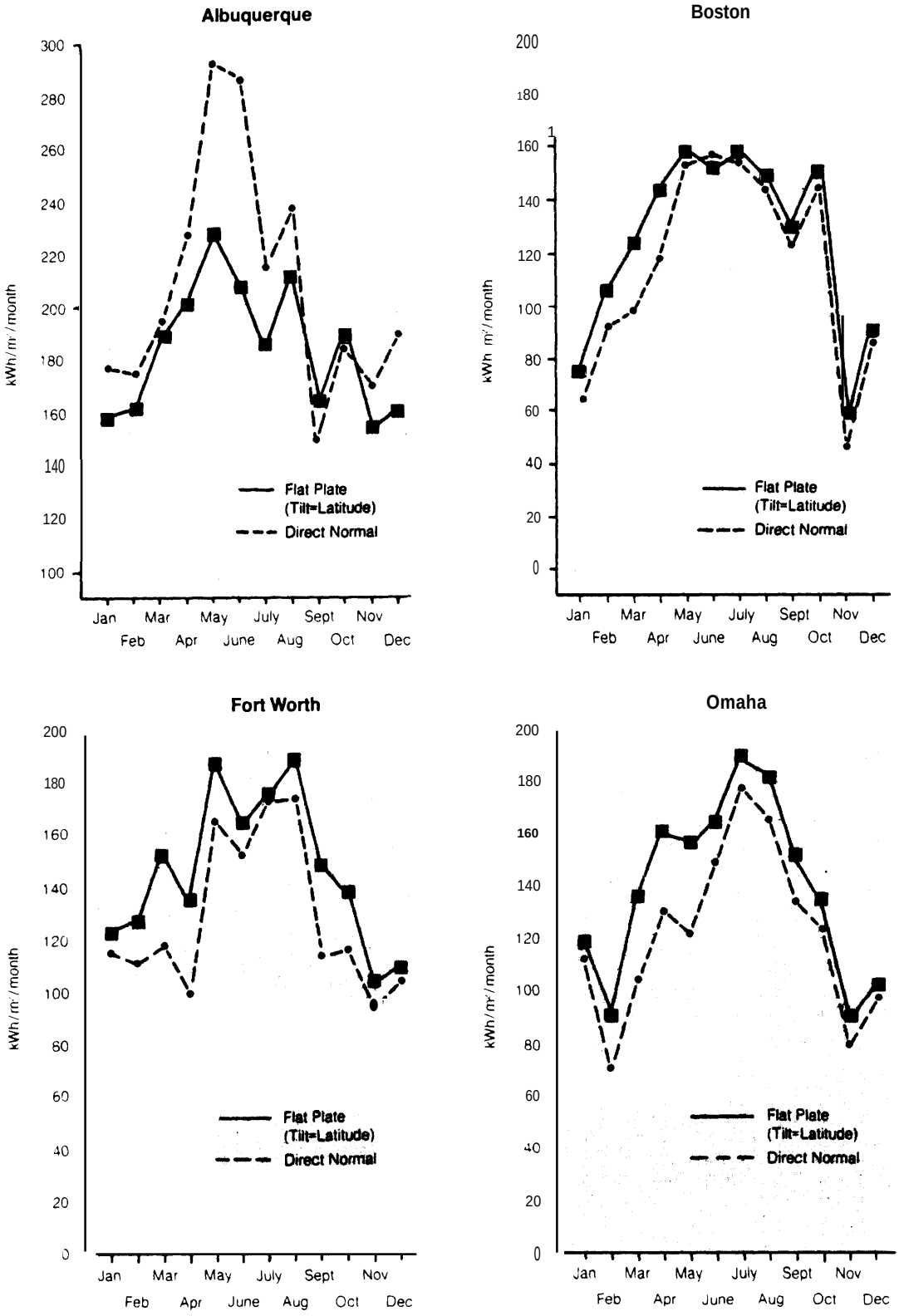

SOURCE: OTA

Figure VIII-38.—Comparison of the Maximum Energy Collectable by Four Types of Collectors Located in Albuquerque (1962 Radiation Data)

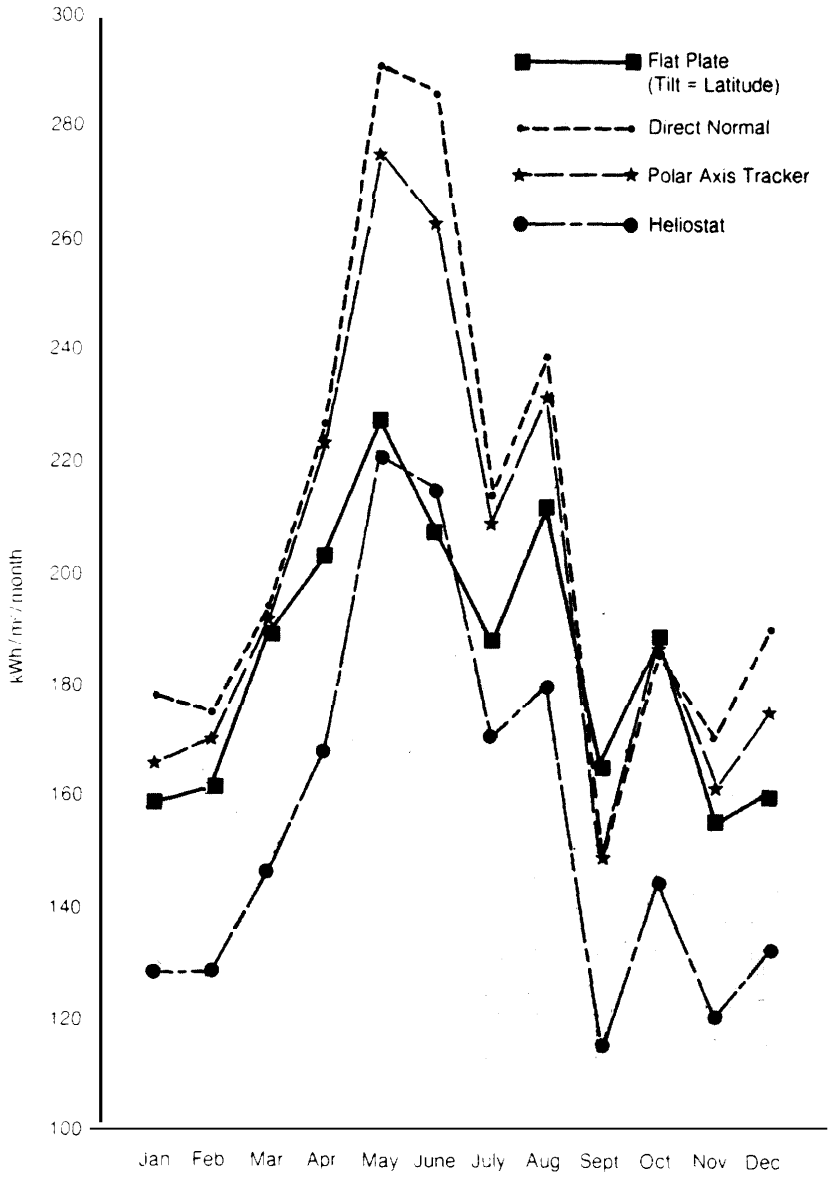

SOURCE: OTA.

Table VIII-10.—Useful Radiation Incident on Flat-Plate and Fully Tracking Concentrating Collectors, Four Cities, in kWh/m^2/year

Collector type	Albuquerque	Boston	Ft. Worth	Omaha
Perfect flat plate (tilted at local latitude)	2,217	1,481	1,742	1,665
Perfect fully tracking collector	**2,500**	**1,373**	**1,543**	**1,458**
Ratio (tracking/flat plate)	1.13	.93	.89	.88

SOURCE. OTA

2. **Reflections from the absorber surface are typically 2 to 10 percent, depending on the type of absorbing surface used.**
3. **About 2 to 4 percent of the energy received is absorbed and heats each cover glass used.**
4. **Dirt on the collector surface reflects** additional light if the collector has not been cleaned.

The energy actually available to heat liquids in a single cover flat-plate collector, therefore, is on the order of 80 to 90 percent of the energy incident on the device. Losses will be greater during the morning and evening when the Sun strikes the collectors at glancing angles and reflective losses are greater.

In tracking systems, losses can result from imperfect reflecting surfaces, reflections from lenses, energy absorption in lenses, inaccurate pointing of the focusing system, and inaccurate placement of the receiver. It is possible to produce mirrors which reflect over 90 percent of the light striking them but concentrating systems now on the market typically use light, inexpensive aluminum reflectors which typically only reflect about 70 to 75 percent of the light striking them. Dirt and dust pose a greater problem for concentrating systems than for the flat-plate devices since a significant amount of the energy in light which strikes dirt on the cover of a flat-plate collector eventually reaches the absorber surfaces and is absorbed. Light deflected by dirt on a focusing system, however, is lost completely. Data on the effect of dirt accumulation on performance is very preliminary at present, and may be critical in determining the net cost and performance of tracking devices.

Thermal Losses

when the absorber of a solar collector is heated, it loses energy back to the environment in three ways: direct radiation (mostly as infrared radiation) as it is lost from any hot body; conduction; and convection through the transparent covers. These losses are proportional to the absorber surface area and increase with the temperature of collection. Concentrating systems have much less absorber area per unit of collector area (it is reduced by the magnification of the concentrating optics) and typically operate at much higher temperatures. In most cases, however, the reduced absorber area more than compensates for the increased temperature. Concentrating systems usually lose a smaller fraction of the energy reaching them to thermal effects than flat-plate collectors.

The Significance of the Loss Factors

The contribution of thermal and optical losses to the net efficiency of several collector designs is illustrated in figure VIII-39. It can be seen that optical losses dominate collector performance in all cases. The effect of optical losses in flat-plate systems is, in fact, understated since the losses calculated assume that the Sun is directly over

Table VIII-11.– Collector Characteristics Assumed in Preparing Figure VIII-39

	Single cover pond	Flat-plate collector (tubular design)	Commercial 1 -axis tracking parabolic trough	1-ax is tracking parabolic trough with improved reflecting surface and receiver	Fully tracking parabolic dish	Heliostat
Concentration ratio	1	1	60	60	1,000	**500**
Outlet temperature (°F) (1)	90	200	300	600	1,500	**950**
Optical efficiency (including pointing inaccuracies, dirt, etc.) (2)	0.75	0.68	0.53	0.65	0.81	**0.83**
Thermal loss coefficient (including convection, conduction and radia-tlon) in kW/m²°C (referenced to collector area) (3)	7.3 x 10– ³	2.0 X10-3	4.1 X1 O-4	1 .5X10⁻⁴	6.2x10⁻⁵	**6.4x1 0-5**

NOTES (1) In all cases theinlet temperature was assumed to be 100° F less than the outlet temperature
(2) In all tracking collectors, optical efficiency includes a 1O°. loss due to dirt
(3 I In computing thermal losses. It was assumed that the am bient temperature was 60" F

SOURCE OTA

Figure VIII-39.— Energy Balance for Five Collector Designs (See table VIII- I 1 for Assumed Characteristics of Collectors)

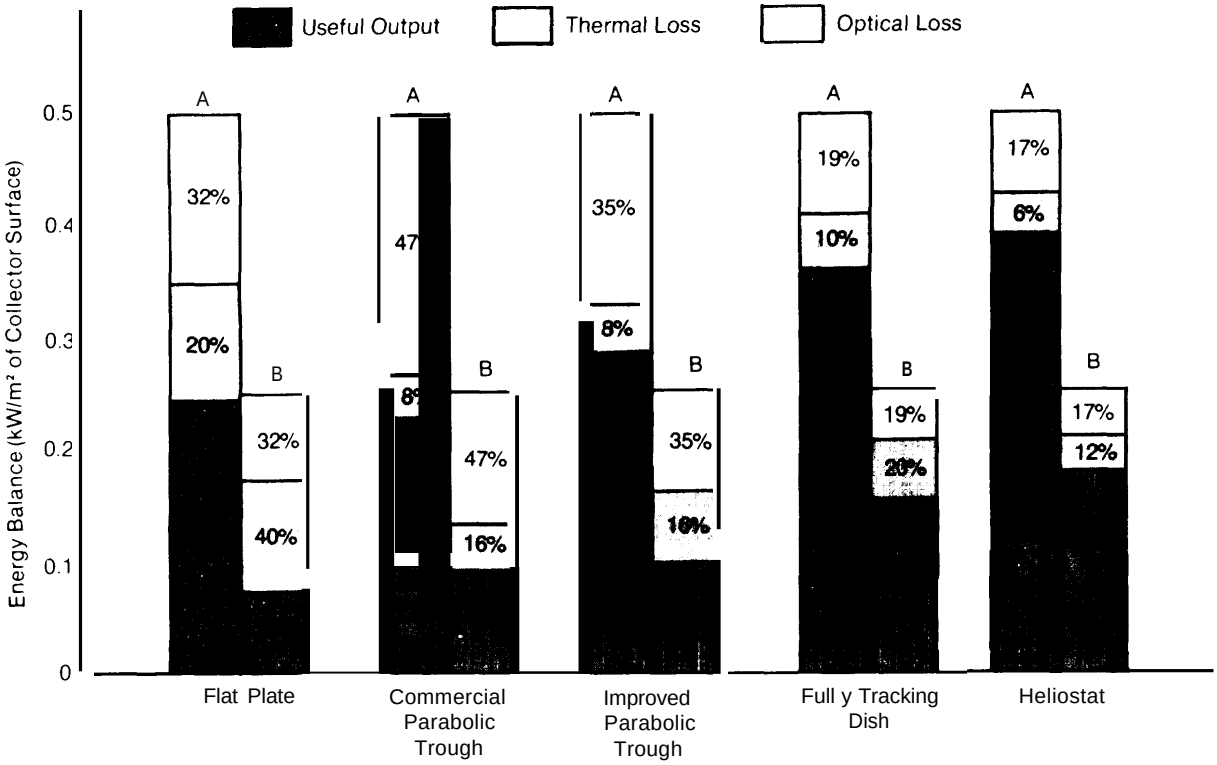

A— Half of Maximum Sunlight (.5 kW/m² Incident on Collector)

B — 1/4 of Maximum Sunlight (.25 kW/m² Incident on Collector)

SOURCE OTA

the collector. The thermal losses shown in the figure are somewhat below average since in most climates solar intensity seldom is above the maximum possible solar intensity, which is typically close to 1 kW/m^2. The relative significance of thermal losses increases sharply as solar intensity decreases — e.g., during periods of partial cloudiness. Moreover, the ambient temperature chosen for comparison was 600 F to show the average performance of collectors throughout the year. During the winter months, the outside temperature will be lower and the thermal losses proportionately higher. The thermal losses of the high temperature collectors are, however, somewhat overstated since the inlet temperature assumed is only 1000 F lower than the outlet temperature. **It** is clear, however, that thermal losses are a relatively small fraction of the energy balance of high-temperature systems.

THE NET PERFORMANCE OF COLLECTORS

The results of an analysis which includes both a calculation of the sunlight available for a collector and the ability of a collector to utilize the sunlight available is summarized in tables VII 1-12 and 13. This information was computed using data on sunlight and ambient temperatures available for each city for each hour of the year 1962. Several observations can be made on the basis of these figures:

1. If systems are ranked in each city by the total annual thermal output produced, the ranking is, with a few exceptions, the same in each city.

2 The only concentrating system which produced less annual thermal output than the flat-plate system was the commercial parabolic trough system.

3. The fully tracking dish produced the largest output in all cities, giving nearly 25 percent more than the best single-axis devices and nearly 60 percent more than the f tat-plate systems.

4. Measured in terms of useful collector output, Albuquerque has almost twice the solar resources as any of the other cities examined. The performance of collectors in Boston, Fort Worth, and Omaha was strikingly similar.

5. The pond collectors typically have very low performance during the winter, particularly if high outlet temperatures are desired.

The results of this analysis indicate that concentrating systems can provide much more useful thermal output than simple flat-plate devices of the same area.

Even parabolic trough devices which make use of known techniques for improving output were superior to the flat plate in each city. This consistent inferiority of the flat-plate system occurred in spite of the fact that the flat-plate device chosen for analysis was a relatively sophisticated and efficient system. This seems to indicate that optical advantages of flat-plate systems (chiefly their ability to gather diffuse sunlight) is more than offset by the advantages offered by concentrating systems (e. g., tracking and reduced thermal losses). A valid comparison of systems can only be obtained, however, from a detailed economic comparison of the systems operating in realistic environments.

The value of this, of course, will depend on the costs added in the process of providing tracking; this can only be resolved in a detailed analysis of the relative costs of integrated systems.

Table VIII-12.—Comparison of the Annual Output of Five Collector Designs, in kWh/m²/year

	Albuquerque	Boston	Ft. Worth	Omaha
Annual radiation on nontracking flat plate tilted at latitude	2,217	,481	1,742	1,665
Annual direct normal radiation	2,500	,373	1,543	1,458
output of:				
Single cover pond	960	—	—	630
Tubular flat plate	952	538	705	619
Commercial parabolic trough	1,030	529	621	561
Improved parabolic trough design	1,370	720	835	765
Heliostat	1,443	791	887	833
Fully tracking dish	1,901	1,023	1,150	1,085

SOURCE OTA

Table VIII-13. —Output of Single Cover and Double Cover Pond Collectors for Various Operating Conditions

		Mean collector temperature* = 90° F		Mean collector temperature = 140" F	
		Annual output (kWh/m²)	Percent of output occurring during October-March	Annual output (kWh/m²)	Percent of output occurring during October-March
Single cover pond collector	Albuquerque	958	23	447	13
	Omaha	630	13	259	5
Double cover pond collector	Albuquerque	804	24	470	16
	Omaha	535	15	281	8

"It was assumed that the collector was operated with a constant fluidinlet temperature 10° F lower than the mean collector temperature and a constant output temperature 100 F higher than the mean collector temperature

SOURCE OTA

Appendix VIII-A

Techniques Used to Compute the Output of Representative Collector Designs

The major variables which must be considered in analyzing collector performance were reviewed in a qualitative way in the main body of this chapter. This appendix indicates how these effects can be quantified and shows how the equations are derived which were used to obtain the detailed estimates of collector performance presented elsewhere in this report. Following the taxonomy of effects used in the earlier discussion, this presentation begins with a discussion of techniques for deriving estimates of the intensity of direct and indirect sunlight which can be captured by each collector geometry. It then provides a detailed discussion of the optical and thermal losses experienced by each major collector type.

AVAILABLE SUNLIGHT

Sunlight Data

As noted earlier, data about available sunlight around the country is of extremely uneven quality. Very few stat ions have measured direct normal sunlight, and results of these measurements have not been readily available. **Information** on the total amount of solar energy reaching a horizontal **surface is available from about 80** locations around the country and is archived in the National Climatic Center in Asheville, N.C. While this data does not distinguish between direct normal radiation and diffuse radiation, statistical techniques have been developed which can be used to approximate the relative contributions of the two types of radiation. The technique used in this study is based on work completed recently by Sandia Laboratories.

The basis for the Sandia analysis is the observation that the intensity of direct normal radiation is correlated with the ratio between the amount of energy actually reaching a horizontal surface in a given hour and the amount of energy which would have fallen on the surface if the Earth had no atmosphere. This ratio is called the "percent possible" sunshine and will be represented by the variable PP. The Sandia work compared the intensity of direct normal radiation (1_{DN}) as a function of PP in several loca tions where measurements of I_{DN} were available. It was found that the relationship could be approximated with a simple segmented straight-line formula which takes the following form:

(A-1)

$$_{DN} = \begin{cases} 0 & \text{when PP is less than or equal to 0.3} \\ A \cdot PP + B & \text{when PP is greater than 0.3 but less than or equal to C} \\ M & \text{when PP is greater than C} \end{cases}$$

where *A, B, C,* **and M are constants which must be determined for each location.** The values of these constants which apply to the three cities (for which consistent direct normal sunlight data is available) are shown in table **VII I-A-I.** Notice that in Albuquerque it was necessary to use different constants for midday and periods early and late in the day. In the analysis of sunlight data for Fort Worth, average values of the constants were used (A = 1.79, B = –0.55, C =0.85, and M = 1.00).

The data actually used for the estimates of collector performance conducted as a part of this study was taken at weather stations during 1962 (1963 in Boston). Table VII I-A-2 compares the average values of direct normal, and total horizontal radiation measured **at** these stations (and reduced us-

---

' **E** Idon C Bees, *Estimating the Direct Component of Solar Radiation,* Sandia Laboratories Energy Report, SAND 75-0565, November 1975

Table VIII-A-1 .—Empirically Derived Constants Used in the Formula for Estimating Direct Normal Radiation, Given Measurements of Total Horizontal Radiation (see equation A-I)

	Spring		Summer		Fall		Winter	
	Albuquerque*							
	Mid	**E-L**	*Mid*	*E-L*	*Mid*	*E-L*	*Mid*	*E-L*
A	**1.64**	**1.13**	**1.65**	**1.07**	**1.56**	**1.15**	**2.42**	**1.68**
B	**-0.43**	**-0.19**	**-0.35**	**-0.17**	**-0.47**	**-0.21**	**-0.78**	**-0.25**
C	**0.85**	**0.85**	**0.80**	**0.80**	**0.85**	**0.85**	**0.80**	**0.80**
M	**1.07**	**1.07**	**0.95**	**0.95**	**0.97**	**0.97**	**1.09**	**1.09**
	Blue Hill							
A	**1.60**		**1.86**		**1.93**		**2.10**	
B	**-0.52**		**-0.56**		**-0.58**		**-0.71**	
c	**0.80**		**0.70**		**0.75**		**0.80**	
M	**0.89**		**0.81**		**0.87**		**1.03**	
	Omaha							
A	**1.69**		**1.62**		**1.88**		**1.67**	
B	**-0.62**		**-0.50**		**-0.68**		**-0.48**	
c	**0.85**		**0.80**		**0.85**		**0.85**	
M	**0.89**		**0.87**		**0.96**		**0.98**	

"In Albuquerque, It was necessary to have separate Sets of constants for mIdday (Mld)andearlyand late In the day (E-L)

SOURCE Bees, Eldon, "Estimating the Direct Component of Solar Radiation," Sandia Laboratories Energy Report, SAND 75-0565, November 1975

ing the methods previously discussed) with average values of these quantities for a 15-year period. The 15-year averages were computed from data prepared by the National Climatic Center and the Aerospace Corporation. The 15-year average values shown **in the table contain correction factors which compensate** for calibration errors recently discovered in some of the older measuring equipment. While, as expected, the 1962 data does not precisely match the long-term average, no systematic error is apparent—some of the 1962 averages are higher while others are lower than the 15-year averages. Since observing sites a few miles apart can take measurements of sunlight and temperature which differ by 10 percent during the same year (because of microclimates producing local patterns of fog, etc.), the *1962* data probably represent a reasonable estimate of insolation as it is reasonable to make, given other errors inherent in projecting the cost of solar energy.

Direct Normal Radiation

The amount of direct normal radiation incident on a collector which is not directly facing the Sun is reduced by a factor equal

Table VIII-A-2.—Comparison of 1962* Weather With Long-Term Averages and Extremes

Average daily sunlight ($kWh/m^2/day$)	Albuquerque	Boston	Fort Worth	Omaha
Direct normal 1962.	**7.0**	**3.9**	**4.3**	**4.0**
15+ yr av**	**7.1**	**3.3**	**4.7**	**4.5**
Ratio: average/1962.	1.01	**0.85**	**1.09**	**1.13**
Total on horizontal surface, 1962	5.5	3.7	4.5	4.2
15 + yr av**	5.8	3.5	4.7	4.2
Ratio: average/1962.	**1.05**	**0.95**	**1.04**	**1.00**
Heating degree-days† 1962	4,310	5,754	2,434	6,272
1954-74 average	4,374	5,769	2,423	6,145
1954-74 extremes.	3,857-4,941	5,410-6,228	1,861-2,855	5,622-6,911

"Read as 1963 for Boston wherever 1962 IS used

"" 15 + year average was compiled from the augmented SOLMET weather tapes produced by the National Cllmatlc Center and the Aerospace Corporation.

†Heatlng degree-day information from "Local Cllmatologlcal Data–Annual Summary with Comparative Data. 1974" Nattonal Cllmatlc Center, Asheville, N.C

to cos θ_i, where θ_i is the angle between the direction to the Sun (which will be represented with the unit vector $\hat{n}_s$) and the direction normal to the collector (which will be represented with the unit vector $\hat{n}_c$). The function cos θ_i is given simply by

$$\cos \theta_i = \hat{n}_s \cdot \hat{n}_c \qquad \textbf{(A-2)}$$

For a fully tracking collector, of course, cos θ_i is always equal to 1 since the collector is always pointing directly at the Sun. Representations of this cosine function for other types of collectors, however, can be quite elaborate since a large number of variables must be considered, With the appropriate choice of geometry, however, the actual calculation can be quite simple. A technique is displayed here which permits a calculation of cos θ_i for all types of tracking collectors. Using equation A-2 requires that $\hat{n}_c$ and $\hat{n}_s$ be expressed **in the same coordinates. The coordinates which are the most convenient are the "collector site coordinates"** illustrated in figures VI II-A-I and VIII-A-2. A glossary of symbols used in computing collector geometry appears in table VI 1 I-A-3. In these coordinates, the z-axis points at the zenith at the collector site, the y-axis points south in the plane of the horizon, and the x-axis points west in the plane of the horizon.

Figure VI II-A.1.– Collector Coordinates Showing the Collector Direction and the Axis of Rotation of the Collector Direction

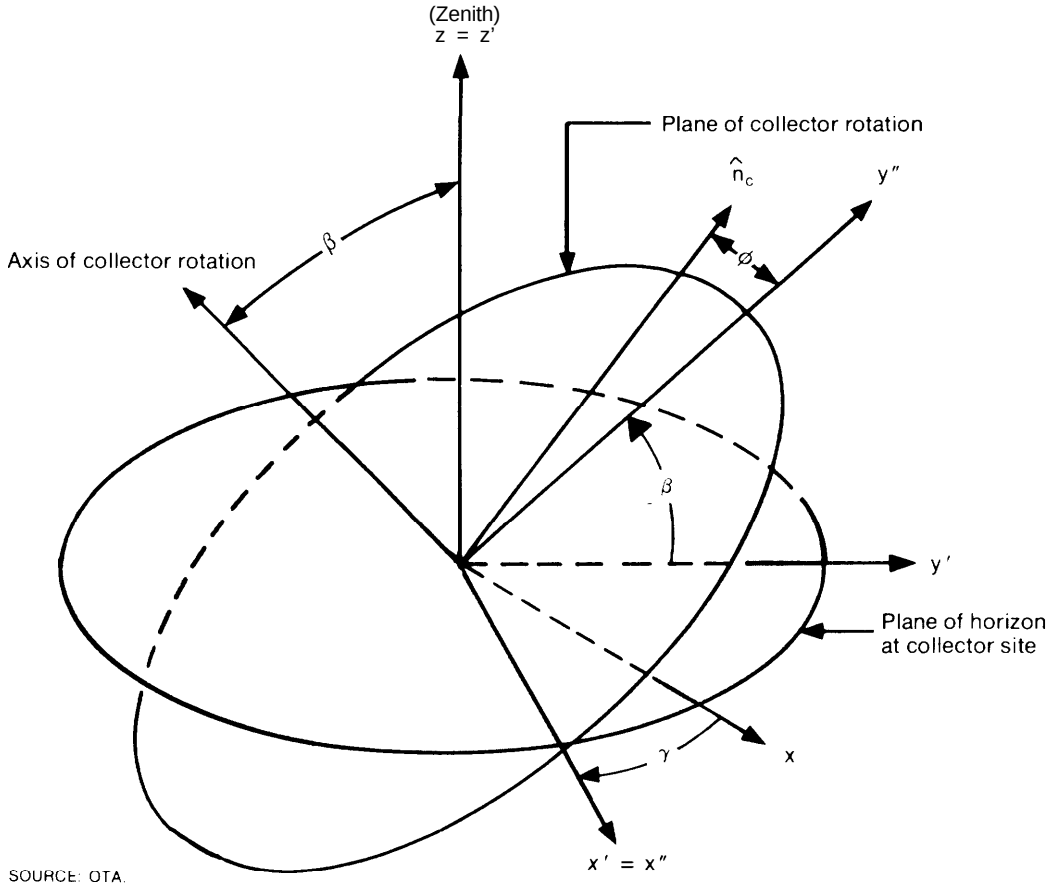

SOURCE: OTA.

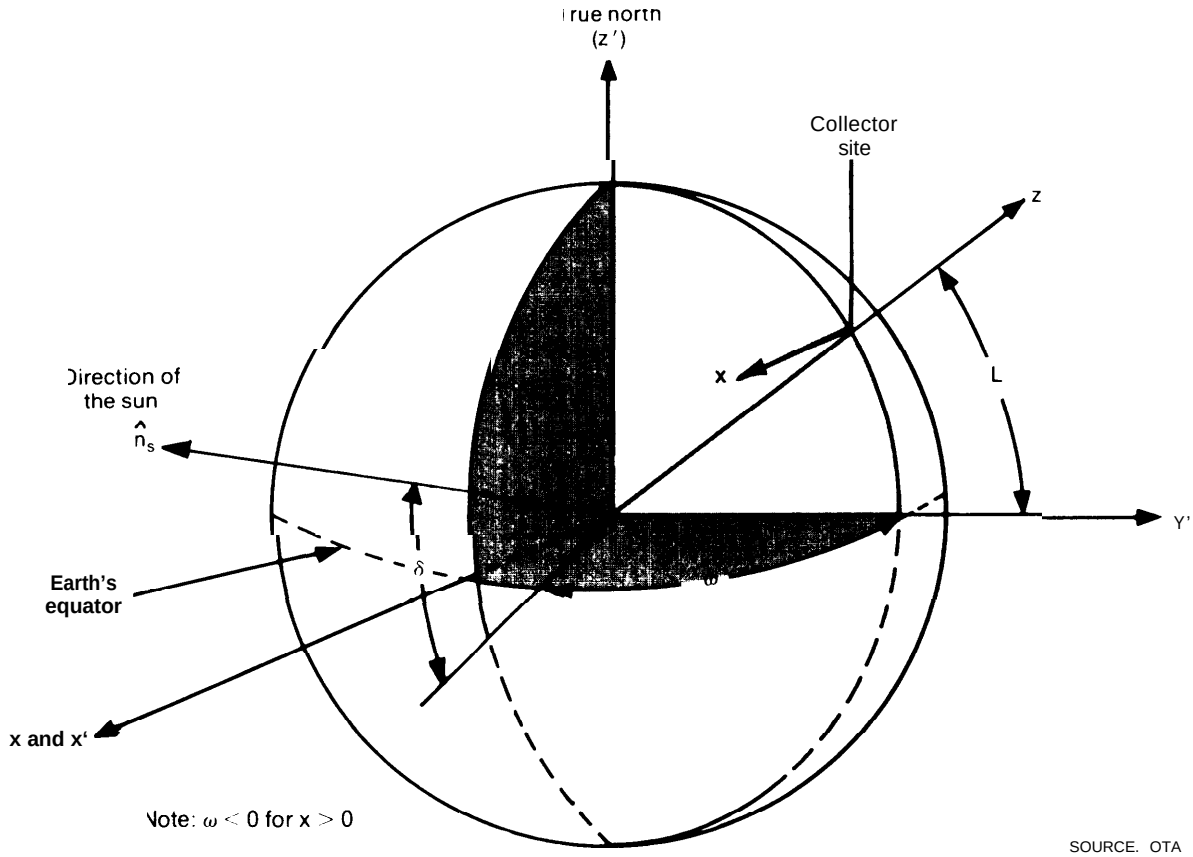

SOURCE. OTA

Table VIII-A-3.—Glossary of Symbols Used in Computing Collector Geometry

(a) *Variables describing the solar position*

L	latitude of the collector site (north is positive)
w	solar hour angle (east is positive, due south is zero)
δ	solar declination (north is positive)
T_n	local standard time on nth day of the year
$T_N(n)$	the hour of solar noon ($\omega = 0$) expressed in clock time using the applicable time zone of the region (eg. eastern standard time) on the nth day of the year
$T_e(n)$	a correction of T_n called the "equation of time" resulting from the fact that the Earth's orbit is not circular, computed for day n
n	the day of the year (0 < n < 365)

(b) *Variables describing the position of the collector*

β	collector tilt angle above the horizontal (positive if tilted south)
γ	direction which the collector faces in the plane of the local horizon (positive if rotated to the east)
φ	angle of rotation about the collector's axis of rotation

The first step is to obtain an expression for the direction of the normal to the collector ($\hat{n}_c$) in the x, y, z coordinates. Figure VIII-A-1 illustrates a completely general collector geometry. The collector direction (n_c) is represented in a set of x'', y'', z'' coordinates which are obtained by two rotations from the x,y, z system: 1) a rotation around the z-axis by an angle γ, and 2) a rotation around the new x'-axis defined by the previous rotation by an amount β. In this double-primed coordinate system

$$\hat{n}_c'' = (\sin \phi, 0, \cos \phi) \qquad \text{(A-3)}$$

where ϕ represents the angle of rotation of a single-axis tracking system where y" is the axis of rotation. The vector can now be transformed simply back to the x,y, z coordinates through two unit rotations which

reverse the rotations by which the x,y, z coordinates were converted to x,'' y,'' z,'' coordinates. With this transformation

(A-4)

$$\hat{n}_c = \begin{pmatrix} \cos\gamma & -\sin\gamma & 0 \\ \sin\gamma & \cos\gamma & 0 \\ 0 & 0 & 1 \end{pmatrix} \cdot \begin{pmatrix} 1 & 0 & 0 \\ 0 & \cos\beta & \sin\beta \\ 0 & -\sin\beta & \cos\beta \end{pmatrix} \cdot \hat{n}_c''$$

$$= (\cos\gamma \sin\phi - \sin\gamma \sin\beta \cos\phi,\ \sin\gamma \sin\phi + \cos\gamma \sin\beta \cos\phi,\ \cos\beta \cos\phi)$$

The second step is to write the Sun position ($\hat{n}_s$) in x,y,z coordinates. This can be done by examining figure VI II-A-2 which defines the ''geocentric'' coordinates x', y', z'. These coordinates are obtained by rotating the collector site coordinates x,y, z through the angle $\pi/2$-L about the x-axis (L is the latitude angle). The z' axis points to true north. In these geocentric coordinates, the Sun's position can be computed simply from its declination angle δ, which changes as a function of the seasons, and the solar hour angle ω, which marks the rotation of the Earth. Using standard polar notation, $\hat{n}_s'$ can be written in geocentric coordinates as follows:

$$\hat{n}_s' = \begin{pmatrix} -\sin(\pi/2\text{-}\delta)\sin\omega \\ \sin(\pi/2\text{-}\delta)\cos\omega \\ \cos(\pi/2\text{-}\delta) \end{pmatrix} \quad \text{(A-5)}$$

This vector can be translated into **collector** site coordinates with a simple unit rotation about the x' axis giving

(A-6)

$$\hat{n}_s = \begin{pmatrix} 1 & 0 & 0 \\ 0 & \cos(\pi/2\text{-L}) & -\sin(\pi/2\text{-L}) \\ 0 & \sin(\pi/2\text{-L}) & \cos(\pi/2\text{-L}) \end{pmatrix} \cdot \hat{n}_s$$

This achieves the objective of expressing both $\hat{n}_s$ and $\hat{n}_c$ in collector site (x,y,z) coordinates and the cosine function can be computed:

$$\begin{aligned} \cos\theta_i &= \hat{n}_c \cdot \hat{n}_s \\ &= -\sin\omega\cos\delta[\cos\gamma\sin\phi \\ &\quad -\sin\gamma\sin\beta\cos\phi] \\ &\quad +[\sin L\cos\omega\cos\delta - \cos L\sin\delta] \\ &\quad \cdot[\sin\gamma\sin\phi + \cos\gamma\sin\beta\cos\phi] \\ &\quad +\cos\beta\cos\phi[\cos L\cos\omega\cos\delta \\ &\quad +\sin L\sin\delta] \end{aligned} \quad \text{(A-7)}$$

Using equation A-7, the tracking geometry of all collectors can be computed rapidly.

FLAT-PLATE COLLECTORS

The typical flat-plate collector is mounted on a sloping roof which faces south, or nearly so. The general formula" for a fixed fiat-plate collector which is tilted up from the horizontal by an angle β and makes an angle γ with respect to south can be found by simply setting $\phi = 0$ in equation A-7. (Some workers define the tilt angle β with respect to the collector normal $\hat{n}_c$ instead of with the horizontal). When the collectors face due south, γ will also be zero.

SINGLE-AXIS TRACKING COLLECTORS

Single-axis tracking collectors can be mounted many different ways, but two widely used configurations have been used in this study

Polar Mount

The polar mount provides more annual output than other single-axis tracking mounts, but is generally more expensive to construct than mounts where the rotational axis is horizontal. The polar mount can be visualized by imagining a collector which rotates about a horizontal axis running from north to south and then tilting the rotational axis up from the horizontal and toward the south by an amount equal to the latitude angle L (see figure VI **11-8).** The cosine factor for polar-mounted tracking devices can be obtained from equation A-7 by setting $\gamma = 0$

and 13 = L, the latitude angle. Using these values in equation A-7 and minimizing the result with respect to the collector angle of rotation ϕ, it is found that collector output is maximized when $\phi = \omega$. The angle of incidence is then simply the solar declination and

$$\cos \theta_i = \cos \delta \qquad \textbf{(A-8)}$$

East-West Axis of Rotation

Collectors which rotate about a horizontal axis that runs east to west receive somewhat less sunlight than single-axis polar-mounted collectors, but are sufficiently less expensive that they are more widely used. The cosine factor for this collector geometry can be obtained by setting $\beta = 0$ and $\gamma = \pi/2$. When the resulting equation is maximized with respect to the tracking angle ϕ, it is found that

$$\tan (L - \phi) = \tan \delta \sec \omega \qquad \textbf{(A-9)}$$

Using A-9 in equation A-7 (with $\beta = 0$ and $\gamma = \pi/2$), and performing some tedious algebra it is found that

$$\cos \theta_i = \pm [1 - \cos^2 \delta \sin^2 \omega]^{1/2} \qquad \textbf{(A-IO)}$$

Equations of Time

The previous section showed how the collector cosine factor could be computed from information about the solar position (the declination and hour angle) and the collector position. Solar declination can be computed simply since it varies approximately sinusoidally from plus 23.5 degrees to minus 23.5 degrees with the maximum occurring at the summer solstice. Computation of the solar hour angle from local time is complicated by two factors: 1) the time shown on clocks with which the sunlight observations are correlated does not correlate with local solar time **since each time zone covers a large spread of longitudes — the Sun can not be** due south at noon in the entire time zone; 2) the times at which the Sun is directly south are not separated by precisely 24 hours (although the yearly average of these separations is exactly 24 **hours)** since the Earth's orbit is an ellipse and not a circle.

If T_n is the hour of the day measured on the nth day of the year in the local time zone (i.e. eastern standard time) and TN(n) is the time at which the Sun points due south on this day (measured in the same local clock time), the solar hour angle can be written on this day as follows:

$$\omega = \frac{2\pi}{24} [T_N(n) - T_n] \qquad \textbf{(A-11)}$$

The time for solar noon can be computed from the latitude of the collector site (L), the **latitude to which the prevailing time zone is referenced (L_{ref}) (L_{ref} is 120°W for Pacific standard time), and a correction factor $T_e(n)$ computed for each day to account** for the elliptical nature of the Earth's orbit. Using these variables it is found that:

$$T_N(n) = 12 - \left(T_e(n) + \frac{L_{ref} - L}{15} \right) \qquad \text{(A-12)}$$

The equation of time is a complex function of the day of the year and its specification requires solving equations for which no closed solution is possible. **It** can be approximated to limits of precision compatible with the rest of the analysis which will be employed here with four terms of a Fourier series. This series is expanded as a periodic function of the length of the year since the equation must have a period of precisely 1 year Coefficients of this expansion have been computed by the National Bureau of Standards[2] and are illustrated in table **VII I-A-4.** The Fourier formula is, as follows:

$$T_e(n) = \sum_{k=0}^{k=3} (1/60) \left[A_k \cos \left(\frac{2\pi k n}{365.25} \right) + B_k \sin \left(\frac{2\pi k n}{365.25} \right) \right] \qquad \text{(A-13)}$$

[2] T. Kusuda, *NBSLD Computer Program for Heating and Cooling Loads in Buildings*, NBS I R 74-574, November 1974

Table VIII-A-4.— Coefficients of the Fourier Expansion of the Equation of Time Used in Equation A-15

A_0	-0.0002	B_0	0
A_1	0.4197	B_1	-7.351
A_2	3.2265	B_2	-9.3912
A_3	0.0903	B_3	-0.3361

Diffuse Radiation

The diffuse component of the solar radiation reaching a horizontal surface (I_{dh}) can be computed if information is available about the total energy incident on a horizontal surface (1_{TH}) and the direct normal radiation **(1_D).**

$$I_{dh} = I_{TH} - I_D \cos\theta_H \qquad \text{(A-14)}$$

where θ_H is the angle between the Sun and the horizon directly below the Sun,

This equation, however, carries no information about the distribution of diffuse radiation across the sky and thus there is not a simple way to compute the amount of diffuse radiation that can be collected by a device which is not horizontal, In fact, the distribution of diffuse radiation over the sky dome varies widely, depending on local weather conditions and on the time of day, It is remarkable, however, that there is very little data in the literature about the distribution which can be expected. In the following discussion, the simplifying assumption that diffuse radiation is distributed uniformly across the sky dome (the "isotropic sky" assumption) has been used, even though it is known that under some conditions the bulk of diffuse radiation emanates from a region in the sky close to the Sun. Very recent work' indicates that this is a conservative assumption which understates the radiation on a tilted surface by as much as 7 percent.

Using this "isotropic sky" assumption, it is possible to convert I_{dh} computed in equation A-1 4 into an estimate of i_D-- the intensity of diffuse radiation on a tilted collector. Following Liu and Jordan, ' it is assumed that the diffuse radiation reaching the collector consists of two parts: (1) a part received directly from the sky (which is assumed to radiate isotropically) and (2) a part reflected from the ground (which is proportional to the fraction of the sky from which radiation could be reflected into the collector). Using these assumptions, it is possible to compute i_d for a collector which has been tilted through an angle β from the horizontal:

$$(I_d/I_{dh}) = \int_{\Omega_s} \cos\theta \cdot d\Omega + \varrho \int_{2\pi-\Omega_s} \cos\theta \cdot d\Omega$$
$$= \left(\frac{1+\cos\beta}{2}\right) + \varrho\left(\frac{1-\cos\beta}{2}\right) \qquad \text{(A-15)}$$

where Ω_s is the solid angle of the sky seen by the collector and ϱ is the reflectivity of the ground. The reflectivity varies greatly from location to location. It may be very high if the area is covered with snow, and it can be artificially enhanced by placing ponds, or reflective surfaces, in appropriate locations close to the reflectors. For the purpose of this analysis, t is assumed that $\varrho = 0.2$, which is a typical reflectivity of dry ground.

Optical Losses

in addition to the limits imposed by the geometry of tracking, the amount of light which reaches the receiver units in solar collectors is limited by a number of losses due to imperfect optics. These losses include: 1) energy absorbed by transparent covers **over the** receiver; 2) losses when light is reflected from mirror surfaces or transmitted through lenses; 3) errors in pointing a tracking **collector** at the Sun; and 4) shading of collectors by adjacent collectors, or (in the case of

'Thomas M Klucher, *Variation of Solar Cc// Sensitivity and Solar Radiation on Inclined Surfaces,* presented at the Semiannual Review Meeting, ERDA Silicon Technology Programs Branch, Aug 23-25, 1977, Williamsburg, Va

4 Y H Liu and R C Jordan, "The Long-Term Average Performance of Flat-Plate Solar Energy **Collectors,"** *Solar* **Energy** 7, 53(1963)

some **tracking units) by other parts of the collector. Designing an optimum collector requires balancing the features which can improve optical efficiency against other design constraints. For example, adding cover glasses can reduce thermal loss but** increase optical losses. **Increasing** the focal length of a concentrating collector can reduce dispersion and transmission losses in lenses, but increases the **size of the Sun's** image and can add to the bulk and contribute to the wind profile of the collector.[5] Increasing the concentration ratio decreases thermal losses, provides a higher temperature thermal output, or reduces the amount of photovoltaic material required. Higher concentrations increase the significance of pointing errors.

TRANSMISSION LOSSES

Light is lost when it passes through transparent receiver covers. Some light is lost due to surface reflections (from both the front and back surface of the covers), and some light is absorbed by the transparent material. These losses represent the bulk of optical losses in flat-plate collectors and can play a significant role in concentrating collectors which surround a receiver with a glass or plastic cover.

The transmission coefficient for various types of materials is illustrated in table VII **I-A-5.** These losses are computed only for normal incidence, however, and transmission decreases with increasing angles of incidence. The analysis of the transmission at angles of incidence other than zero can be complex. The following formula fits empirical data with a fair degree of accuracy:[6]

$$T(\theta_i) = \begin{cases} T(0)\ [\cos(\theta_i)]^{1/2} & \text{two covers} \\ T(0)\ [\cos(\theta_i)]^{1/4} & \text{one cover} \end{cases} \qquad \text{(A-16)}$$

here $T(\theta_i)$ is the transmissivity at angle θ_i, and T(0) is the transmissivity for a case where the light is incident normal to the plane of the cover. If diffuse light strikes the collector uniformly from all angles, $T(\theta)$ must be averaged over the section of the sky which is viewed by the collector as follows:

(A-1 7)

$$\bar{T} = \frac{\int_{\Omega_s} T(\theta)\cos\theta\, d\Omega}{\int_{\Omega_s} \cos\theta\, d\Omega} = \frac{\int_{\beta-\pi/2}^{\pi/2} \cos\phi\, T(\phi)\, d\phi}{1+\cos\beta}$$

where Ω_s is the solid ang e of the sky viewed by the collector.

For a horizontal flat-pl ate system receving radiation from an isotropic sky, equation A-1 8 gives:

T (one cover) = 0.89 T(0)
T (two covers) = 0.80 T(0) **(A-18)**

IMPERFECT REFLECTIONS FROM MIRROR SURFACES

Materials proposed for use as mirror surfaces in concentrating collectors vary greatly in their cost and optical properties. An ideal material would be inexpensive, have a high reflectance, create little dispersion (i. e., a narrow beam of incident light should be reflected without spreading), resist impact from hailstones (no fracturing or denting), and not attract dust. Candidate materials include first-surface glass mirrors (which have high reflectivity but are vulnerable to tarnishing and scratching), second-surface glass mirrors (low-iron glass is preferred to reduce absorption), second-surface bulk acrylic mirrors, annodized aluminum (relatively inexpensive and easy to form but a lower overall reflectivity (60 to 80 percent)), and a variety of metalized plastic films. The plastic films are much less expen-

[5] **Gene Nixon,** *cast acrylic Fresnel /ens solar concentrator* distributed by Swedlow, Inc., obtained by OTA, May 26, 1977.

[6] 'Empirical expression provided for OTA by **Don Watt**

Table VIII-A-5.—Transmittance of Transparent Covering Materials Which May be Used in Solar Collectors (Assuming the Solar Spectrum Resulting From Air Mass 1)

Material	Thickness (in.)	Supplier	cutoff wavelength um	Hem is, reflectance	Normal solar transmittance
Quartz	0.125	Sandia Glass Shop	0.26	0.064	0.94
Teflon 100 C	0.001	Dupont	0.26	0.031	0.93
Pyrex (Corning 7740)	0.134	Sandia	0.36	0.067	0.91
Acrylite	*0.0625*	Glass Shop Petterson	**0.35**	NM†	*0.89*
Plexiglas "G"	**0.125** 0.0625 0.219	Petterson	**0.35**	NM	0.87 0.88 0.86
Tedlar, polished	0.004	Dupont	0.31	0.080	0.88
Swedlow centinuous cast acrylic	0.076	Swedlow	0.33	0.070	0.88
Swedlow coated acrylic, cell cast	0.273	Swedlow	0.39	0.058	0.85
Israeli collector glazing	0.092	Peterson	0.31	NM	0.85
Glass for mirror	0.125	Champion	0.31	0.070	0.85

Material	Thickness (in.)	Supplier	cutoff wavelength um	Hem is. reflectance	Hemispherical solar transmittance
Teflon 100 C	0.001	Dupont	0.25	0.031	0.96
Aclar #22A	0.002	Rain hart: Allied Chem.	0.25	0.060	0.94
Corning Ultramicrosheet	**0.0045**	Butler: Corning	0.30	0.071	0.92
Tedlar, polished	0.004	Dupont	0.30	0.080	0.91
Lucite 147	0.120	Dupont	0.38	NM†	0.85
Mylar D	0.010	Dupont	0.33	0.112	0.85
Rhom-Haas Korad A. std. clear	**0.005**	Brumleve	0.38	0.088	0.86
Fllon A748, Tedlar coated	0.028	Filon Corp.	0.38	0.082	0.84
Kalwall Sunlite Regular	0.040	Kalwall Corp.	0.38	0.079	0.83
Mylar A	0.005	Dupon	0.38	0.19	0.78
Kalwall Sunlite Premium	0.040	Kalwall Corp.	0.38	0.087	0.79
Swedlow continuous cast acrylic	0.076	Swedlow Corp.	0.38	0.070	0.86
Swedlow coated acrylic (cell cast)	0.273	Swedlow Corp.	0.38	0.058	0.85

†NM = not measured

SOURCE *Solar Total Energy Program Semiannual Report* April 1975 September 1975 SAN D76 0078 Sandia Labs, Albuquerque N Mex April 1976 p 98 99

sive, **but many appear to age rapidly and to attract dust, and currently available materials have relatively low reflectivities. The search** for an optimum reflecting surface will be an important development problem for the next several years.

Figure VI II-A-3 and table VI II-A-6 illustrate the optical properties of a number of different reflecting surfaces. It can be seen that the materials vary greatly both in total reflectivity and in the amount of dispersion introduced. The reflectivity for glass mirrors can be as high as 96 percent, while the inexpensive aluminum reflectors can have reflectivities below 80 percent.

The surfaces also vary in the amount of dispersion which they introduce. Mirrors which introduce large amounts of dispersion cannot be used to achieve high magnification (as is shown quantitatively in the next section). The aluminized 1 Mil Teflon film material shown on figure VII I-A-3, for example, reflects 75 percent of the light incident **on it** into a cone smaller than 4 mrad wide. **The second-surface glass mirror reflects over 90 percent** of its light into a cone less than 2 milt-ad in width.

A final difference between surfaces is the variation of reflectance with the angle of incidence of the incoming light. Class mirrors and first-surface aluminized du Pont experimental film show almost no variation over a wide range of incidence angles, while other materials such as the aluminized **1-3 Mil Mylar-S film have very poor reflectance at** small angles of incidence, [7]

SHADING, BLOCKING, AND END LOSSES

Three additional loss factors must be considered:

[7] **R. C Zenter (Boeing Aerospace Co), "Performance of Low Cost Solar Reflectors for Transferring Sunlight to a Distant Collector, "** *Solar Energy,* **Vol 19, No 1, 1977, pp 15-21**

Figure VI II-A-3.—The Specular Reflectance at 500nm as a Function of the Collection Angular Aperture for Several Reflector Materials, Together With Their Solar Averaged Hemispherical Reflectance, $R_s(2\pi)$. Incidence Angle = 20°.

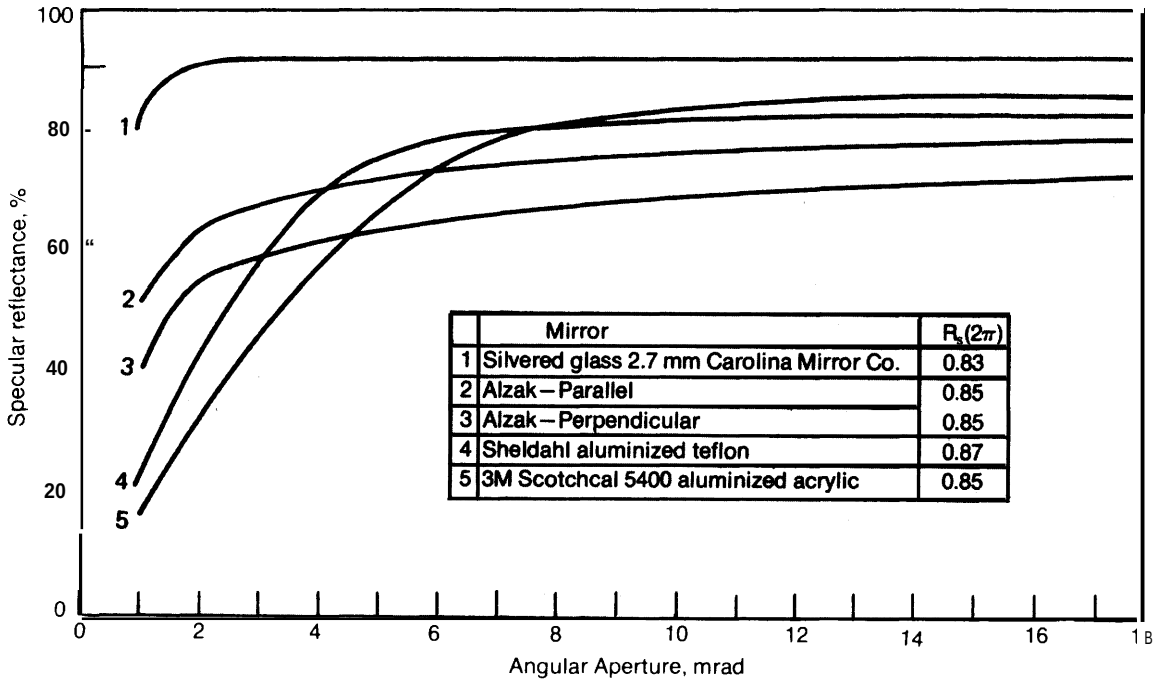

	Mirror	$R_s(2\pi)$
1	Silvered glass 2.7 mm Carolina Mirror Co.	0.83
2	Alzak—Parallel	0.85
3	Alzak—Perpendicular	0.85
4	Sheldahl aluminized teflon	0.87
5	3M Scotchcal 5400 aluminized acrylic	0.85

SOURCE: R. B. Petit and L. G. Rainhart (Sandia Labs, Albuquerque) Private Communication, Sept. 1977.

Table VIII-A-6.—Specular Reflectivities

Material	Supplier	Wavelength (um)	Specular Reflectivity	Cone angle (MRAD) containing 67% of reflected light	Reference
1. Second-surface silvered glass					
A. Laminated glass	Carolina Mirror Co.	**500**	**.92**	**0.15**	**(3)**
B. Corning Micro-sheet, 0.11 mm.	Sandia	**550**	.78	1.1	(4)
C. Corning 0317, no iron, 1.5 mm fu - sion glass.	Carolina Mirror CO.	—	.96	small	(2)
D. Float glass with iron . . . . . ——		—	**.82**	small	(2)
II. First-surface glass					
A. Double acrylic coat, silver . . .	Sheldahl	**550**	**.93**	**.21**	**(4)**
B. AL/ground glass overcoat		**628**	**.88**	**<1.7**	**(6)**
III. Polished aluminum					
A. ALZAK lighting sheet (Parallel to rolling marks)	Alcoa	**505**	.62	.29	(3)
(Perpendicular to rolling marks).		**505**	.56	.42	(3)
B. KINGLUX reflector sheet (Parellel to rolling marks). .	Kingston Industries	498	.67	,43	(3)
(Perpendicular to rolling marks).	Kingston Industries	498 Sun	.65 .81	.37 ——	(3)
E. Household foil . . . . . ——		Sun	.65	——	(8)
V. Metalized plastic films					
A 2nd-surf. alum. FEK-163	3M	**500**	**.86**	**0.90**	**(3)**
B. 2nd-surf. alum. Teflon	Sheldahl	**500**	**.80**	**1.3**	**(3)**
c. 2nd-surf. alum. Teflon laminated to alum. sheet	Sheldahl	**550**	**.87**	**1.2**	(4)
D. Al/nylon, 1st surf ., . ———		Sun	.80	— —	(8)
E. A1/Kapton-H, 1st surf. , 0.25 mm		628	.87	5	(6)

References

1 Handbook *of Chemistry and Physics* The Chemical Rubber Co , Ed by R C Weast, 54th Edition, 1973-1974, p E-225
2 L G Rainhard(Sandia Labs, Albuquerque) private communication, Aug 10, 1977
3 R B Petit and B L Butler (Sandia Labs, Albuquerque) *Semiannual Review ERDA Thermal Power Systems, Dispersed Power Systems, Distributed Collectors and Research and Development, Mirror Ma terials and Selective Coatings* SAN D77-01 11, February 1977, p 6
4 *Solar Total Energy Program Semiannual Report October* 1975 *and March 7976 SAND76 0205,* Sandia Labs, Albuquerque, June 1976
5 Test report by Desert Sunshine Exposure Test, Inc , March 4, 1977, rendered to Kingston Industries Corp DSET Order No 17127S
6 R C Zentner (Boeing Aerospace Co), " Performance of Low Cost Solar Reflectors for Transferring Sunlightto a Distant Collector, " *Solar Energy,* Vol 19, No 1, 1977, pp 15-21
7 L Drummeter and G Haas "Solar Absorptance and Thermal Emittance of Evaported Coating s,' *Physics of Thin Films, 2, 1964* Ed by G Haas and R Thun, Academic Press
8 F Daniels(University of Wisconsin, dec) *Direct Use of the Sun Energy* Yale University Press of Ballantine Books, Inc 1964

1. "End losses" of one-axis tracking devices which result from the fact that some part of the light reflecting from a trough or other one-axis tracking unit will miss the receiver surface except during the infrequent occasions when the incident light is directly normal to the collector plane;
2. Shading of collectors by adjacent collectors; and
3. Blocking of the reflected beam of a heliostat by other heliostats

End Losses

If the collector reflecting surface is a flat Fresnel lens or a series of coplanar linear slats, light incident on an area of the collector aperture equal to $FD/\tan\theta$ will miss the receiver surface. (F is the focal length of the optics, D is the collector width, and θ is the angle of incidence of direct sunlight measured with respect to a direction normal to the plane of the collector.) **If the collector length is** L, **then the fraction of the incident light lost in end effects (1',(0)) is** given by:

$$\Gamma_e(\theta) = \frac{F|\tan\theta|}{L} \qquad \textbf{(A-19)}$$

If the system uses a parabolic trough, the calculation is somewhat more complex since points on the edge of the trough are farther from the focal line than points at the base of the trough. It can be shown that in this case the fraction of the incident light lost in end effects is given by:

$$\Gamma_e(\theta) = [(D/L)\, f\, /|\tan\theta|] \cdot [1 + 1/(48f^2)] \qquad (A\text{-}20)$$

where f = F/D **is the "f-number" of the optical system.**

Shading **Factors**

The amount of energy lost **when one collector** shades an adjacent coll **ector depends** on the exact geometry of the **collector field** and must be computed separately for each case. These losses can be reduced **or eliminated if the collectors are widely spaced, but such separation increases the demand** for land use and can increase piping costs **(in the case of distributed collectors) or add to the demands placed on pointing accuracy (in the case of heliostat designs). In addition, the solar image will be larger from** more distant heliostats, decreasing efficiency, or concentration ratio. A balance must be struck in each application. In many cases, **however, a shading problem will be negligible if the collector surfaces cover less than about one-fourth of the area provided for collectors.**

Heliostats

The shading, blocking, and cosine factors of heliostat fields are complex since the location and pointing angle of each **heliostat in a large field must be analyzed to develop an estimate** of overall system performance. An independent analysis of this problem has not been attempted in this report and the computations of heliostat performance rely on an analysis performed by the University of Houston in connection with the McDonnell Douglas design proposal **for a** 10 MWe pilot plant **for a** 100 MWe central receiver system. The results of this analysis are illustrated in figure VII I-A-4. The curves shown include the effects of atmospheric attenuation for clear days in the southwest United States, and apply to a field optimally designed for a site at *350 N* **latitude.** The designers attempted to design a system which performed well during the periods near dawn and dusk, and which minimized seasonal variations. Mirror spacing is not uniform, but on the average about one-fourth of the area is actually covered with mirrors.

The curves of figure VII I-A-4 indicate the normalized power to the receiver and **include** the cosine factors of the heliostats, shading and blocking effects, a receiver interception factor, and attenuation between the mirrors.

Figure VIII-A-4. —Monthly/Hourly Variation in Available Thermal Power

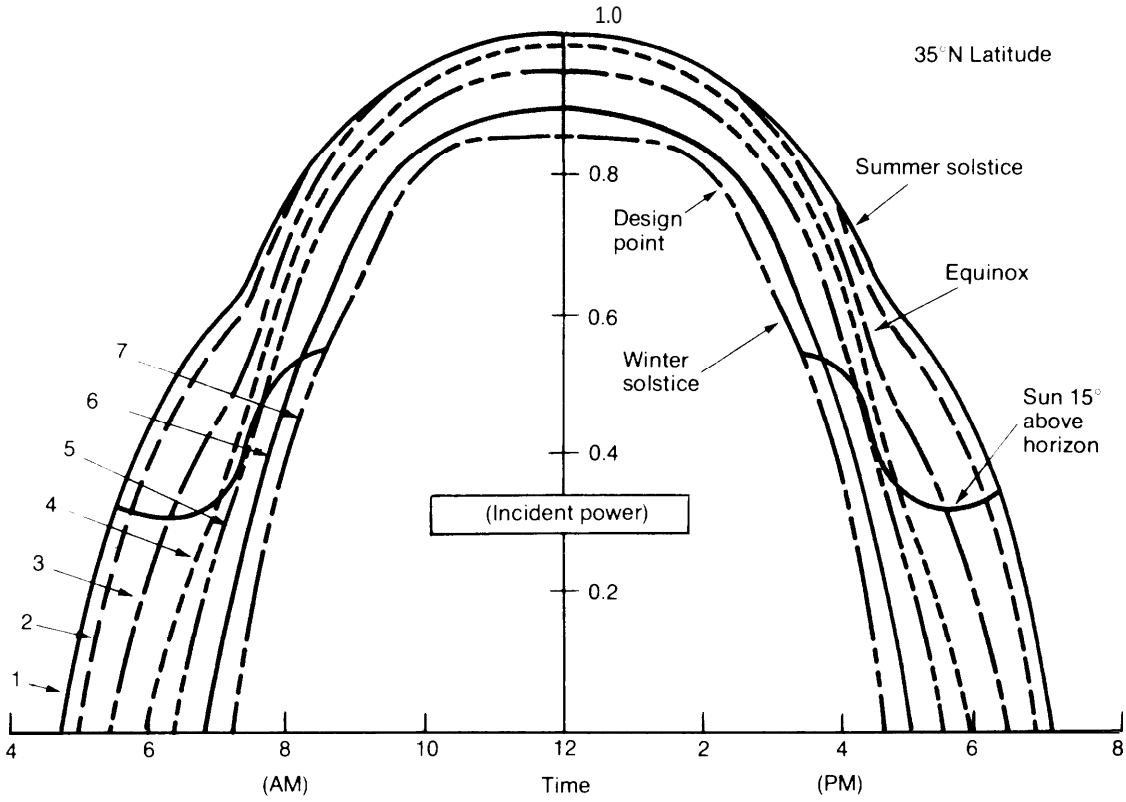

Curve number	**Day** number range when the curve is applicable*
1	158-186
2	127-157 and 187-217
3	97-126 and 218-248
4	66- 96 and 249-278
5	36- 65 and 279-309
6	5- 35 and 310-340
7	1- 4 and 341-365

*January 1 is day #1

SOURCE Raymon W Hallet. Jr and Robert L Gervais. Central Receiver Solar Thermal Power System Phase I 1st Quarter Technical Progress Report McDonnell Douglas Astronautics Company (January, 1976), p 18 MDCG6318

These **curves were** used in the analysis by approximating each curve with a six-line segment polygon adjusted so that the area under the polygon was approximately equal to the area under the curves illustrated. The shapes of the polygons **were also** adjusted to reflect different day lengths at latitudes other than 35° N

Limits on the Geometric Concentration Ratio

The amount of concentration of sunlight possible with a **given set of optics is limited by the pointing accuracy of the tracking system used, by the dispersion introduced into the optics by imperfect reflecting surfaces, and by the finite diameter of the Sun.**

(The intensity of the light actually reaching the absorber will, of course, also be limited by the cosine factor, shading and blocking effects, and the reflection and absorption losses discussed earl ier.)

There is some abiguity about the proper way to define the geometric concentration ratio. I n the **following discussion, geometric concentration ratio (C_g) is defined to be the ratio between the aperture of the collector and the area of the receiver which can be reached by the reflected or refracted sunlight. This definition assumes that the portions of the receiver which can never** be illuminated are well insulated. This definition must be applied with some care in the case of one-dimensional tracking systems since the concentration ratio will not be equal to the ratio between the solar energy reaching the mirror or lens surface and the light reaching the collector absorber (assuming perfect optics), except when the Sun's direction is directly normal to the plane of the collector. At all other times, the effective geometric concentration ratio for a perfect collector is equal to the geometric concentration ratio multiplied by the shading factor $1 - \Gamma_e(\theta)$.

If the optical properties of the system are perfect, the only limit on the geometric concentration ratio will be the angular diameter of the Sun. The Sun's diameter (γ_s) varies from 9.16 milrad to about 9.46 milrad, changing as the Earth-Sun distance varies over the year. The limits which this imposes on the concentration ratios possible are illustrated for three different concentrating systems in figure VII l-A-5. The solar image reflected (or transmitted) from an extreme edge of the lens or mirror has a width of $R_m\alpha_s$ and the solar image reflected (or transmitted) from the center of the lens or mirror has a width of approximately $F\alpha_s$ (where F is the focal length of the optical system). It can be seen that the intensity of the image will be greater in the image center. This can create difficulties if "hot-spots" place high stresses on small parts of the receiver, and nonuniform illumination can reduce the performance of photovoltaic cells. With careful design the impact of these effects can be reduced. For example, the facets of a Fresnel lens or mirror can be adjusted to spread the image to create a uniform illumination on the receiver surface. Measurements performed on a cast acrylic Fresnel lens designed by Swedlow, Inc., are shown in figure VII l-A-6. Careful mirror design or the use of a secondary mirror near the focal point can also minimize the problem of uneven illumination. A precise computation of the intensity distribution of the solar image requires compensation for the fact that the luminosity of the Sun varies over the solar disk. [8]

The size of the solar image reaching the receiver in any practical system will be larger than the angular diameter of the Sun because of dispersion introduced by imperfect reflecting or transmitting surfaces, by imperfect concentrator shape, and because of imperfect tracking. In addition, atmospheric dispersion (e. g., hazy sky) can increase the apparent diameter of the Sun by a factor of 2 or more.

The dispersion introduced by different types of reflecting surfaces was illustrated in figure VII l-A-3. I n the following calculations, the cone angle containing 90 percent of the reflected light intensity is called α_d. Lenses have some advantage in minimizing dispersion since an imperfection in a mirror surface which has the effect of tilting the mirror surface by an angle A above the ideal mirror angle will result in an error **2A** in the angle at which light is reflected. A lens with a similar error at each surface typically results in an angular error of less than 2A, depending on the index of refraction of the lens and the angle between the lens surfaces.

Tracking errors can be treated with fair accuracy by simply assuming that the solar image is spread by tracking errors by an

'D. L. Evans (Arizona State University), "On the Performance of Cylindrical Parabolic Solar Concentrators with Flat Absorbers, " *Solar Energy,* **Vol. 19, No, 4,1977, pp 379-385.**

Figure VIII-A-5.—The Solar mane on Three Typical Concentrating Collectors

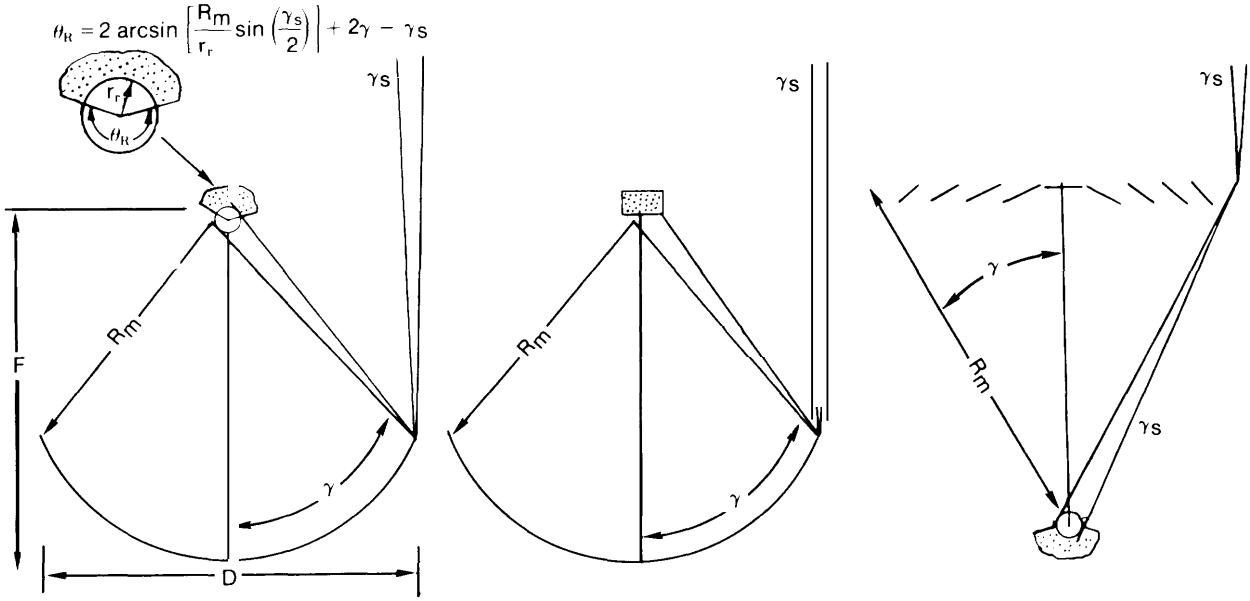

Parabolic Trough with Cylindrical Absorber

Parabolic Trough with Flat Absorber

Flat Fresnel Lens with Cylindrical Absorber

SOURCE OTA

angle *at.* The angle a_t will be chosen to be twice the angle between the ideal collector direction and the actual collector direction, which is exceeded less than 5 percent of the time when the collector is operating. An estimate of the maximum concentration possible given tracking and optical dispersion effects can be made by simply replacing γ in equation A-23 with a where a is given by:

$$a = a^2_s + a^2_d + a^2_t$$

If **chromatic aberation is an important effect, a_d should be increased accordingly. A simple tracking system can achieve a pointing accuracy such that a_t is below about 0.5 degrees or 8.6 milrad.** Such a system could have a dispersion angle of 0.6 degrees or **10.5 milrad. A carefully constructed system** can have a combined error (2δ), due to **dispersion and tracking, of 6 milrad.[9] If the mean solar diameter is used, these cases** give a = 16.5 milrad (imprecise optics and tracking); a = 11.1 milrad (precise optics and tracking).

The calculation of the concentration ratio C_g, as defined earlier, must begin with a calculation of the area of the receiver required to capture some desired fraction of the available sunlight. It is easiest to begin by computing the maximum distance from the lens or mirror to the focal point of the collector. This length, which is called R_m, can be calculated as follows:

(A-21)

$$(R_m/D) = \begin{cases} f\sqrt{1 + 1/(4f^2)} & \text{flat lens or segmented mirror} \\ f\,[1 + 1/(4f)^2] & \text{parabolic mirror} \end{cases}$$

where f = F/D and the other variables used are defined in figure VII I-A-5, It will also be necessary to compute the half rim-angle γ (see figure VIII-A-5). This variable can be computed from R_m/D as follows:

[9]Raymon **W** Hallet, **Jr , and Robert L** Gervais, **Central Receiver Solar Thermal** *Power System* **Phase** *1, Final* **Report, McDonnel l Douglas Astronautics Company (1 977) SAN 1108**

Figure VIII-A-6.— Characteristics of the Image of Acrylic Fresnel Lenses Designed by Swedlow Inc. for Solar Applications

Intensity distribution **at the focus of an acrylic fresnel lens designed for** one-axis **concentration on a linear thermal receiver.**

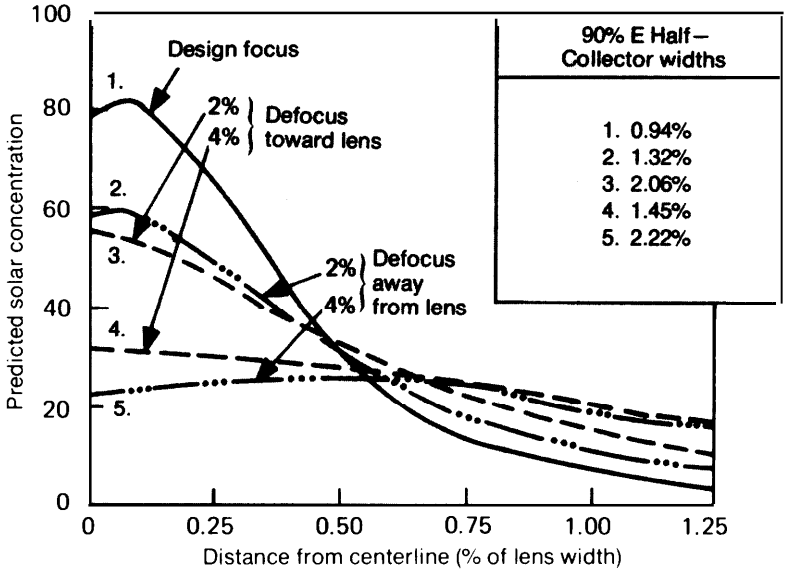

Intensity distribution at the focus of an acrylic fresnel lens designed for **two-axis concentration on a photoelectric device.**

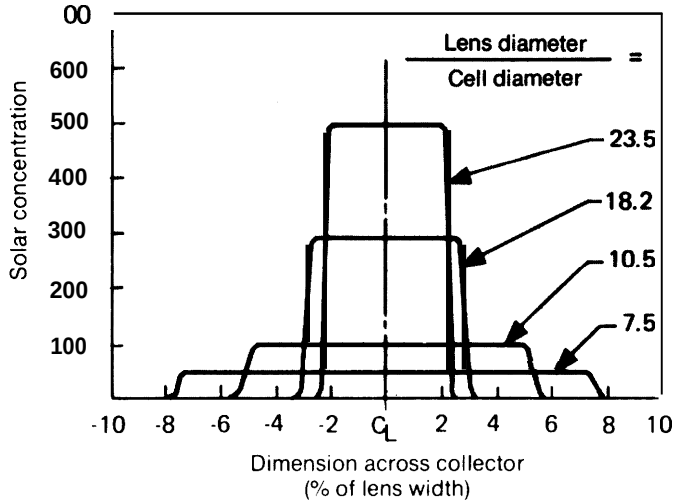

SOURCE Nixon Gene Cast Acrylic Fresnel Lens Solar Concentrator paper distributed by **the** Swedlow Inc obtained by OTA May 26, 1977 pages 27 and 22

$$\gamma = \sin^{-1}(D/2R_m) \qquad \text{(A-22)}$$

With perfect tracking and optics, all of the sunlight incident on a one-axis tracking collector could be captured by a flat receiver with area A_r where

$$A_r = LR_m\gamma/\cos\gamma + (\text{terms of order } \gamma^2) \qquad \text{(A-23)}$$

In computing the effective receiving area for a receiver with a circular cross section, it is assumed that the portions of the receiving tube which are never illuminated by the Sun are covered with an insulating material of sufficient quality that losses through the insulation are negligible, The angle measured from the center of the circular receiving tube which can be illuminated (θ_R) is given by

$\theta_R = 2\sin^{-1}[(R_m/r_r)\sin(\alpha/2)] + 2\gamma - \alpha \doteq \pi + 2\gamma - \alpha$ when the concentration ratio is maximized by setting the receiver radius $r_r = R_m\alpha/2$. The area of the receiver in this case is given by

$$A_R = L\alpha R_m\theta_R/2 \qquad \text{(A-24)}$$

Using equation A-23 or A-24, it is now possible to compute the geometric concentration ratio simply with $C_g = LD/A_R$. Tables VIII-A-7 and VIII-A-8 illustrate C_g for a variety of different assumptions. The concentration ratios for the two-axis tracking systems are simply the square of the concentration ratios for the one-axis tracking system.

Net Sunlight Available

The sunlight reaching the receiving surface or absorber (I_s) for a nonconcentrating collector includes both direct and diffuse sunlight and can be expressed as:

$$_s = \varrho \quad (1-\Gamma_e) \quad (1-\Gamma_s) \quad \left[I_D T(\theta)\cos\theta - \bar{T}(I_{TH} - I_D\cos\theta_H)\left(\frac{1+\cos\beta}{2} + \varrho_g \; \frac{1-\cos\beta}{2}\right)\right] \qquad \text{(A-25)}$$

Γ_e = fraction of energy lost as end losses
Γ_s = fraction of energy lost in shading and blocking
ϱ = reflectivity of mirrors
$T(\theta)$ = transmissivity of cover plates
ϑ = angle of solar incidence on collector
ϑ_H = angle between zenith and Sun
β = collector tilt above horizontal
ϱ_g = surface reflectivity of the ground
I_D = direct sunlight
I_{TH} = total horizontal sunlight

As the concentration ratio increases above one, the fraction of the diffuse radiation intercepted by the collector which reaches the receiver surface drops rapidly, and for concentration ratios above 10, the diffuse sunlight can generally be neglected, leaving

$$_s = \varrho(1-\Gamma_e)(1-\Gamma_s)\, I_D T(\theta)\cos\theta \qquad \text{(A-26)}$$

Thermal Losses

Not all of the solar energy reaching the receiving element of a solar collector can be removed as useful energy since some of the energy reaching the receiver will be reflected from the absorbing surfaces of the receiver and some of the absorbed energy will be conducted or reradiated back to the atmosphere. As shown earlier, the thermal loss effects are usually much more significant for flat-plate collector systems with relatively large receiver surfaces than they are for concentrating systems with relatively

Table VIII-A-7.—Maximum Possible Geometric Concentration Ratios at Perihelion (Perfect Optics $\gamma = \gamma_S$)

	1-D Concentrator					2-D Concentrator		
f-number of optics (F/D)	Flat receiver, parabolic trough	Tubular receiver, parabolic trough	Flat receiver, flat Fresnel concentrator	Tubular receiver, flat Fresnel concentrator	Flat receiver, parabolic dish	Spherical receiver, parabolic dish	Flat receiver, flat Fresnel concentrator	Spherical receiver flat Fresnel concentrator
.2	...	66.	73.	71.	...	4311.	5315.	5072.
.4	83.	71.	103.	67.	6935.	5016.	10636.	4496.
.6	106.	64.	104.	60.	11173.	4061.	10811.	3584.
.8	99.	55.	95.	53.	9793.	3072.	9029.	2781.
1.0	88.	48.	85.	47.	7706.	2342.	7152.	2170.
1.2	77.	43.	75.	41.	5991.	1824.	5634.	1720.
1.4	69.	38.	67.	37.	4713.	1453.	4484.	1387.
1.6	61.	34.	60.	34.	3772.	1182.	3623.	1138.
1.8	55.	31.	55.	31.	3073.	978.	2972.	949.
2.0	50.	29.	50.	28.	2544.	822.	2475.	802.
2.2	46.	26.	46.	26.	2137.	700.	2088.	686.
2.4	43.	25.	42.	24.	1818.	604.	1782.	592.
2.6	40.	23.	39.	23.	1564.	525.	1537.	517.
2.8	37.	21.	37.	21.	1359.	461.	1339.	455.
3.0	35.	20.	34.	20.	1191.	408.	1175.	403.
3.2	32.	19.	32.	19.	1052.	364.	1040.	360.
3.4	31.	18.	30.	18.	936.	326.	926.	323.
3.6	29.	17.	29.	17.	838.	294.	830.	291.
3.8	27.	16.	27.	16.	754.	266.	748.	264.
4.0	26.	16.	26.	16.	682.	242.	677.	241.

SOURCE. OTA

Table VIII-A-8.—Maximum Possible Geometric Concentration Ratios (Imprecise Optics and Tracking γ = 16.5 Milrad)

	1-D Concentrator			2-D Concentrator				
f-number of optics (F/D)	Flat receiver, parabolic trough	Tubular receiver parabolic trough	Flat receiver, flat Fresnel concentrator	Tubular receiver, flat Fresnel concentrator	Flat receiver, parabolic dish	Spherical receiver, parabolic dish	Flat receiver, flat parabolic concentrator	Spherical receiver, flat Fresnel concentrator
.2	.....	36.	41.	40.	.....	1330	1640	1570.
.4	46.	39.	57.	37.	2140,	1553.	3283.	1392.
.6	59.	35.	58.	33.	3449.	1257,	3337.	1110.
.8	55.	31.	53.	29.	3023.	952	2787	861.
1.0	49.	27.	47.	26.	2378.	725.	2207.	672.
1.2	43.	24.	42.	23.	1849.	565.	1739.	533.
1.4	38.	21.	37.	21.	1455.	450.	1384	430.
1.6	34.	19.	33.	19.	1164.	366	1118	353.
1.8	31.	17.	30.	17.	948.	303.	917.	294.
2.0	28.	16.	28.	16.	785.	255.	764	248.
2.2	26.	15.	25.	15.	660.	217	644	212.
2.4	24.	14.	23.	14.	561.	187.	550.	184.
2.6	22.	13.	22.	13.	483.	163.	474,	160.
2.8	20.	12.	20.	12.	419.	143,	413	141.
3.0	19.	11.	19.	11.	368.	126.	363	125.
3.2	18.	11.	18.	11.	325	113.	321.	111.
3.4	17.	10.	17.	10.	289	101	286	100.
3.6	16.	10.	16.	10.	259,	91	256	90.
3.8	15.	9.	15.	9.	233.	83.	231	82.
4.0	15.	9.	14.	9.	211	75	209	75.

SOURCE OTA

small receiver surfaces. The thermal loss effects have been treated extensively in a number of recent publications[10 11 12 13 14 15] and no attempt is made to reproduce the analysis presented in these works. All that is done here is to summarize the results which are directly relevant to the analysis of this study.

THERMAL LOSSES AND HEAT COLLECTED

Two different, but rather simple, expressions were used to compute the thermal losses, For some cases, the fluid flow rate f_r was fixed. The heat Q_c collected per unit area of collector is then

$$Q_c = F_r[I_s - U_L(T_i - T_a)] \qquad \text{(A-27)}$$

Here U_L is a thermal loss coefficient (the effective conductivity between the heated fluid and the atmosphere). Fr is the "collector heat removal factor'" which accounts for the use of the fluid inlet temperature T, instead of the mean absorber temperature in the calculation. T_a is the outdoor air temperature.

The other case modeled assumed that the flow rate is varied so the fluid outlet temperature T_o remains constant. The heat collected is then

$$Q_c = I_s - \frac{U_L([(T_i + T_o)/2] - T_a)}{1 + U_L/k_e} \qquad \text{(A-28)}$$

Here k_e is the thermal conductivity between the absorber surface and the fluid, For the concentrating collectors considered, U_L/k_e is less than 0.01 and can be ignored. For heliostats, U_L was based on the outlet temperature rather than the mean temperature.

Typical thermal loss coefficients for a variety of collectors are shown in table VII I-A-9.

It should be noted that the thermal loss term of equation A-27 would be divided by the concentration ratio to obtain the heat lost by concentrating collectors. The expressions used for determining the performance of photovoltaic collectors are somewhat more complicated and are discussed in chapter X.

Detailed *Calculation of Flat. Plate Collector Output*

This section presents methods for computing the output of flat-plate collectors which assume that the thermal loss coefficient U_L is constant and a method which explicitly considers the dependence of U_L on the wind velocity, collector tilt, absorber temperature, and air temperature. The results show that the approximations used with U_L constant are adequate for the long-term system performance which is central to this study.

There are three primary sources of heat loss from the receiver of a solar collector:

1. Radiation – Any hot body radiates energy at the rate of $\epsilon\sigma T^4$, where T is the temperature of the body in degrees Kelvin, ϵ is the emissivity of the radiating surface, and σ is the Stefan-Boltzmann constant:

   (5.67 x 10-8Watt/m2-K4).

2. *Conduction* – Heat flows from the

---

[10] John A Duffie and William A Beckman, op cit chapters 4-8

[11] Frederick F Simon, *Flat-Plate Solar-Collector Performance Evaluation with a Solar Simulator as a Basis for Collector Selection and Performance Prediction*, NASA TM X-71 793, presented at 1975 ISES Meeting, Los Angeles, Calif

[12] M W Edenburn, *Performance of a* Focusing Cylindrical *Parabolic Solar Energy Collector:* Analysis and *Computer* Program, SLA-74-0031, Sandia Laboratories, April 1974

[13] G W Treadwell, W H McCulloch, and R S Rusk, *Test* Results *from a Parabolic-Cylindrical Solar Collector,* SAND 75-5333, Sandia Laboratories, July 1975

[14] Raymon W Hallet, Jr, and Robert L Gervais, *Central Receiver Solar Power System, Phase 1– Final* Report Pilet *Plant Preliminary Design* (MCDG 6040), pp 310, 337,366, January 1976

[15] Giovanni Francia, "Large Scale Central Receiver Solar Test Facilities" *Proceedings,* Int Seminar on Large Scale Solar Energy Test Facilities, Las Cruces, N Mex, Nov 18-19, 1975

[16] John A Duffie, op cit pp 146-151

Table VIII-A.9.—Typical Thermal Loss Coefficients

Collector type	($kW/m^2°C$)	Temperature range	Reference
1 cover flat plate . . .	.0074	< 150° F (< 66" C)	1
2 cover flat plate .	.0046 -.0063	< 200° F (< 93" C)	1
2 cover flat plate, selective absorber. .	.0032 -.0046	< 250° F (<1210 C)	1
Tubular flat plate. .	.0011 -.002	< 250° F (<121 "C)	1,2
Parabolic trough, unglazed.	.025	140°-3500 F (60°-1770 C)	3
Parabolic trough, glazed, sel. absorber, no vacuum.	.009	250°-6000 F (121 °-316°C)	4
Heliostat	.03	9000-1 ,100° F (482°-5930 C)	5,6
Parabolic dish	.076	1,4000-1 ,500° F (760°-8160 C)	7

1 Simon, Frederick F , op cit
2 *Air Conditioning & Refrigeration Business*, July 1976 data for KTA collector
3 Acurex Aerotherm, "Technical Note, Concentrating Solar Collector Model 3002-01 ," received by OTA, 1977
4 Acurex Aerotherm, "Model 3001 High.Temperature Concentrating Solar Collector, " specifications received by OTA, 1977
5 Hallet, Raymon W , Jr Ibid
6 Franc la, Giovanni, Ibid
7 Estimate based on T⁴ scaling of heliostat value

heated collector surfaces through insulation, covering glass, and structural supports to the atmosphere.

3 Convection – Circulation of the air between the collector plates or motion of air outside the top cover of the collector causes thermal losses. Such circulation is generally present due to gravity, **even in enclosed** spaces. Such losses can, of course, be greatly reduced if the space between the receiver surface and covers is evacuated.

For long-term modeling, the heat loss can be treated as proportional to the difference between the average absorber surface temperature and the ambient air temperature; i.e., the heat loss per unit absorber surface area is $U_L \Delta T$ where U_L is the effective conductance between the absorber surface and the atmosphere and includes losses due to all three processes mentioned above.

When the collector inlet and outlet fluid temperatures T_i and T_o are known, the **useful thermal output (Q_c) can be given as:**

$$Q_c = A_c I_s - \frac{(U_l/C_R)[(T_i + T_o)/2 - T_a]}{1 + U_l/k_e} \quad \textbf{(A-29)}$$

where

A_c = **collector** aperture area
I_s = sunlight intensity reaching the collector (see equation A-25)
U_l = thermal loss coefficient per unit area of absorber surface
C_r = concentration ratio of the optical system used
T_a = the ambient air temperature
k_e = heat transfer coefficient between the absorber surface and the fluid,

Equation A-29 makes the implicit assumption that the temperature of the surfaces of the absorber and the fluid temperatures vary I i nearly over the area of the collector. The actual distribution of temperatures across the area of the collector depends on

the details of the construction of the device (placement of the tubes, the heat-conducting properties of metal surfaces, etc.). Several recent papers have examined this problem with **some care,**[17 18 19] **A simple technique for approximating this complicated calculation which was** used in the analysis conducted for this study relies on defining a correction factor, Fr.

This **correction** factor, sometimes called the "heat removal factor, " is defined to be the ratio of the useful thermal output of a collector (Q_c) to the **useful output of the collector, assuming that the entire collector absorber surface was held at the inlet temperature (T,):**

$$F_R = \frac{f_r C_p (T_o - T_i)}{S - (U_L/C_R)(T_i - T_a)} \qquad \textbf{(A-30)}$$

where f_r is the mass velocity of the fluid moving through the collector and C_p is the specific heat of the collector fluid. The heat removal factor defined in this way actually changes slightly throughout the year as a function of operating conditions, but it can be shown that in most cases of practical interest, these changes are negligibly small when T_o-Ti is only a few "C. Assuming that F_R is a constant, the collector output can be given **as follows:**

$$Q_c = F_R A_c [I_s - (U_L/C_R)(T_i - T_a)] \qquad \text{(A-31)}$$

Techniques for computing F_R for different types of collector geometries are discussed **in detail** in Duffie.[20]

A similar approximation which can be used to evaluate the performance of collectors covered with photovoltaic **cells is discussed** in chapter X. The values of U_L actually used in the analysis were based on the empirical performance data summarized **in table VII** I-A-IO.

An **iterative Solution to Collector Heat Loss**

A **typical flat-plate collector is** shown in figure VI II-A-7 and **is used to illustrate the detailed method** used to compute heat losses. **The system is characterized** by five temperatures:

- T_1 = **the temperature of the absorber plate**
- T_2 = **the temperature of the inside cover**
- T_3 = **the temperature of the outside cover**
- T_4 = **the ambient air temperature**
- T_5 = **the effective black** body temperature of the atmosphere

[17] F F **Simon,** *F/at-P/ate Solar Collector Performance Evaluation Performance Prediction,* **presented at the** ISES **Meeting, Los Angeles, Cal If ,** July 28-Aug **8, 1975**

[18] Duffie, **op** cit **, pp 138-153**

[19] E **M Sparrow and R J Krowech,** *Journal of Heat Transfer,* Vol **99, 1977, pp 360-366**

[20] **Duffie, op cit., pp 146-151**

Table VIII-A-10.—Ratio of Collector Output When "Average" U-Value Used to Output of Collector With Variable U-Value for Flat-plate Collectors in Omaha With Tilt Angle— Latitude

Collector type	Inlet temperature	"Average" U-value (kW/m²°C)	Jan	Feb	Mar	Apr	May	Jun	Jul	Aug	Sep	Oct	Nov	Dec	Annual
1 cover	90° F(32°C)	,0069	.946	.954	.977	.999	1.007	1.005	1.005	1.0031.002		.999	.992	.970	.996
1 cover	120°F(49°C)	.0072	.900	.913	.964	1.006	1.033	1.024	1.0191.0221.014			1.003	.993	.942	1,004
2 cover	120°F(49°C)	.0041	.945	.956	.974	1.001	1.015	1.012	1.011	1.0121.007		1.002	.989	.967	.998
2 cover, selective absorber	1 50° F(66°C)	.0025	.978	.983	.991	1.004	1,014	1.012	1.011	1.011	1.007	1.004	.999	.986	1.003

SOURCE OTA

Figure VIII-A-7.—Geometry of a Simple Flat-Plate Collector

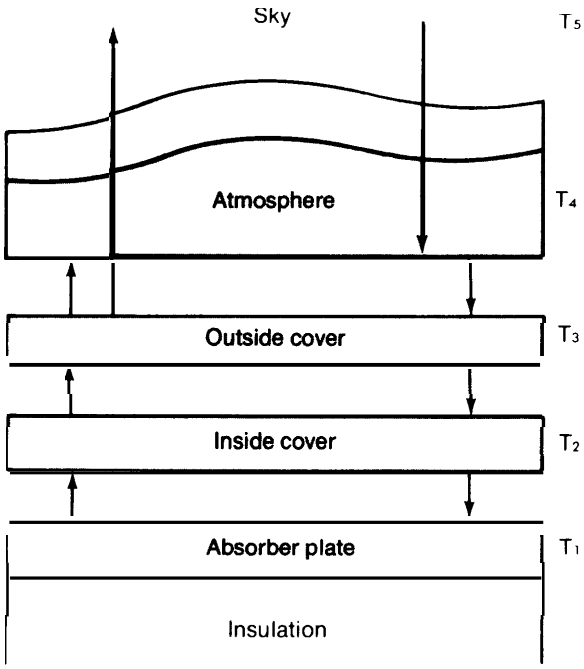

(The typical temperature drop occurring across a glass cover is less than 10 C, so each cover is assumed to be at a single temperature.) The receiver and first cover are separated by a distance d_{12} and the inside and outside covers are separated by a distance d_{23}. **In equilibrium, the heat flowing from the absorber to the first cover must equal** the **heat flow between the two cover plates** which must, in turn, **equal the heat flowing from the top plate into the atmosphere. If** the heat flowing from surface i to surface j is **called** Q_{ij}, **the heat** flows can be expressed as follows:

$$Q_{12}(C_R/A_C) = \epsilon_{12}\sigma T(T_1^4 - T_2^4) + h_{12}(T_1 - T_2) = k_{12}(T_1 - T_2)$$

$$Q_{23}(C_R/A_C) = \epsilon_{23}\sigma T(T_2^4 - T_3^4) + h_{23}(T_2 - T_3) = k_{23}(T_2 - T_3)$$

$$Q_{34}(C_R/A_C) = \epsilon_{34}\sigma T(T_3^4 - T_5^4) + h_{34}(T_3 - T_4) = k_{34}(T_3 - T_4) \qquad \text{(A-32)}$$

Here h_{ij} are the effective convective/conductive heat transfer coefficients (it being assumed that convective and conductive losses are linear with the temperature difference) and ϵ_{ij} is the effective emissivity for radiative heat transfer between the two surf aces.

The coefficient ϵ_{ij} can be computed by supposing that energy radiated from one surface with temperature T_i and emissivity ϵ_i is all incident on a second surface with temperature T_j and emissivity ϵ_j. Of the energy initially incident on surface *j*, a fraction ϵ_j will be absorbed and $(1-\epsilon_j)$ will be reflected. An infinite **series can thus be constructed and it can be shown that the net heat transfer rate** per unit area is given by

$$\epsilon_{ij}(T_i^4 - T_j^4) \quad \text{where} \quad \epsilon_{ij} = [1/\epsilon_i + 1/\epsilon_j - 1)^{-1} \qquad \text{(A-33)}$$

The convective/conductive heat transfer coefficients are much more difficult to evaluate since a number of effects can contribute to these losses and since the convective effects will depend on the precise geometry and orientation of the collector. The coefficients which apply to the spaces inside the collector (h_{12} and h_{23}) are usually given by:

$$\eta_{ij} = Nu\, K_a/d_{i,i+1} \quad i = 1,2 \qquad \textbf{(A-34)}$$

where *Nu* is the Nusselt number of the process (the ratio of the convective heat transfer to the conductive transfer) and K_a is the conductivity of air. The problem then **becomes one of establishing an appropriate** Nusselt number for **the process.** Hollands, **et** al.,[21] have **suggested the following (basically empirical formula):**

$$Nu = 1 + 1.44\left(1 - \frac{1708}{R\cos\beta}\right)\left(1 - \frac{1708(\sin 1.8\beta)^{1.6}}{R\cos\beta}\right) + \left[\left(\frac{R\cos\beta}{5830}\right)^{0.33} - 1\right] \qquad \text{(A-35)}$$

[21] K.G. T Hollands, **et al.,** *Journal of Heat Transfer,* **Vol. 98, May 1976, pp. 189-193,**

R = Rayleigh number
$= [gB\Delta T d^3_{i,i+1}]/\nu\alpha$
B = thermal expansion coefficient of air
ν = kinematic viscosity of air
g = gravitational acceleration
α = thermal diffusivity of air
β = angle of tilt from horizontal
$\Delta T = T_{i+1} - T_i$

The symbol $\{x\} = [(|x| + x)/2]$

Outside of the collector, convection will be affected by the wind and the computation of h_{34} must include this effect.

Recent work[22] suggests that for a wide range of wind conditions, the convective/conductive heat transfer coefficient outside the collector may be taken as:

$$h_{34} = \text{larger of} \begin{cases} 1.08\ Pr^{0.33} Re^{0.5} K_a/d \\ 0.14\ (R\sin\beta)^{0.33} K_a/d \end{cases} \quad \text{(A-36)}$$

Pr = Prandtl number $= C_p\mu/K_a$
Re = Reynolds number $= Vd/\nu$
d = hydraulic diameter = 4 × (collector area)/(collector perimeter length)
C_p = specific heat of air
V = wind velocity

The bottom expression in equation A-36 (due to Lloyd, *et al.*[23]) corresponds to turbulent free convection.

If the temperatures T_1 through T_5 and coefficients ϵ_{ij} and h_{ij} are known, k_{ij} can be determined from equation A-34 and the thermal loss coefficient U_L is

$$U_L = [(1/k_{12}) + (1/k_{23}) + (1/k_{34})]^{-1} \quad \text{(A-37)}$$

A correction to equation A-29 must be made for losses through the back and sides of the collector, but these corrections are not shown explicitly in the following discussion since they are easy to compute once the temperatures in the collector are known,

Since the heat loss coefficients k_{ij} have a weak but complicated temperature dependence, it is usually not possible to obtain a closed expression for U_L. The most convenient technique for computing U_L is to solve an algorithm for the expression using a digital computer. One such technique is presented below,

The solution is initiated with the assumption that the average temperature of the receiving surface (T_i) is equal to the inlet fluid temperature T, and that the temperature rise across the thickness of the collector is equally divided between the two air spaces (i.e., $T_2 = T_1 + (T_1 - T_4)/3$ and $T_3 = T_2 + (T_1 - T_4)/3$). These temperatures can then be used to compute the heat loss coefficients k_{ij} which can in turn be used to obtain a new estimate for the temperatures T_3 and T_2 using equation A-32. These new temperatures can then be used to compute a new set of approximations to k_{ij}. The cycle is continued until successive values of T_2 and T_3 satisfy a convergence criteria. When the desired convergence is achieved, the parameter U'_L can be computed, including the side and back losses. This U'_L can be used to compute the collector output:

$$Q_c = A_c F_R [I_s - U'_L(T_i - T_4)] \quad \text{(A-38)}$$

and the output temperature of the fluid moving through the collector is then $T_o = T_i + Q_c/MC_p$ where M is the mass flow rate and C_p is the specific heat of the fluid, With this estimate of TO, a new estimate of the average temperature of the collector surface can be computed as $(T_i + T_o)/2 + Q_c C_R/h_f A_c$ where h_f is the heat transfer coefficient between the fluid and the absorber surface. The procedure for computing U_L for a given ambient temperature and plate temperature can be used again to obtain a new estimate of U_L. This series can be continued until a convergence criteria for the average temperature of the collector surface is satisfied. A final value of U'_L can then be computed which meets all of the specified boundary conditions.

[22] "E M Sparrow, University of Minnesota, private communication, Febr 25, 1977

[23] "J R Lloyd, E M Sparrow, and E R GEckert, *Int. Journal of Heat and Mass Transfer, 15,457-473, (1972)*

An Approximate Solution

Since the procedure just described is quite lengthy and quite expensive to execute on a computer, an approximation was used to compute the heat loss in the analysis of integrated systems conducted for this study. The approximation was simply to use equation A-29 or equation A-31, depending on whether the system was modeled with a fixed-outlet temperature T_o or with a fixed-flow rate f_r This equation was used with an empirically derived value for U_L which was assumed to be constant throughout the year. Measured values of U_L for a variety of different collector designs are shown in table VII I-A-IO.

Table VIII-A-IO compares the monthly output of collectors calculated assuming a U-value independent of temperature with the collector output calculated using the variable U-value procedure of the previous sect ion. Computation of the variable U_L-values using the iterative solution included all corrections discussed in the previous section: it assumed F_R = 0.95, it used Duffie's assumptions about radiative sky temperatures, and it assumed typical values for heat loss through the back and sides of collectors. The comparisons all assume a constant flow rate of 10 cm^3/sec per square meter of collector area A_c and a fixed inlet temperature for collectors in Omaha. The "average" U-value used for the fixed U-value case was computed using the annual average daytime temperature and wind velocity.

It can be seen from table VII I-A-IO **that the total annual output agrees to within about 0.5 percent in all four cases run. The monthly totals vary by as much as 10** percent, but for the two-cover, selective absorber case which has thermal losses comparable to the tubular flat-plate collector generally modeled, the monthly differences are always less than 3 percent. During the winter, the fixed U-value approach gives less output than the variable U-value approach. This indicates that lower ambient temperatures during the winter decrease the U-value more than the increase due to higher wind velocities, even for single cover collectors.

The fixed U-value approach reduced the cost of computer computation by about 50 percent.

Chapter IX
ENERGY CONVERSION WITH HEAT ENGINES

Chapter IX.— ENERGY CONVERSION WITH HEAT ENGINES

Page

Background 329
Thermodynamics. 330
Cogeneration. 332
The RankineCycle. 333
Cycle Performance 336
Turbine Efficiency 338
PerformanceWith Heat Recovery. 340
PerformanceWith Backup PowerSources 343
State of the Art. 345
System Costs... 352
Costs of Organic RankineSystems. . . . 354
The BraytonCycle. 354
System Efficiency. 360
OperationWith Fossil Backup. 365
System Costs... 365
TheStirlingand Ericsson Cycles.. 366
Priniciples of Operation 366
Design Alternatives. 368
Performance 376
PerformanceWithWaste Heat. 378
SystemCosts. 379
State of the Art. 381
Other Heat-Engine Designs 383
The Thermionic Converter 383
ThermoelectricConversion 385
The Nitinol Engine. 385
Osmotic-Pressure Engine. 386
EnvironmentalandSafetyProblems. 387
Fluorocarbons 387

Page

Noise 388
WaterUse in SteamCycles 389
Sodium and Potassium Vapor 389

LIST OF TABLES

Table No. Page

I. Organic Power-CycleWorking Fluids Used in SystemTesting or in Development 339
2. Efficiency of Steam Rankine Devices Operated From Storage at Reduced Temperature 345
3. Ratio of EnergyRequired for Boiling to Total EnergySenttoTurbine 345
4. Small Steam RankineTurbines 346
5. Design and Performance Parameters of Current and Projected RankineAutomotive PowerSystems 347
6. ExperimentalOrganic RankineTurbines in the UnitedStates. 348
7. Brayton Cycle Efficiencies. 363
8. Stirling Engine Characteristics 378
9. Performance of Free-Piston Stirling Engine Designs of EnergyResearch and Generation, inc.. 379
10. Performance of SunPower Free-Piston Devices 379

LIST OF FIGURES

Figure No, *Page*

1. Cycle Efficiencies of Heat Engines 331
2. System Performance (Ratio of Electric and Thermal Energy Produced to Energy Entering the System). 333
3. Rankine-Cycle Devices With Heat Extraction 335
4. Temperature Dependence of Rankine-Cycle Devices 337
5. Rankine-Cycle Expander Efficiencies. 338
6. Efficiency of Backpressure Steam RankineDevices 340
7. Schematic Diagram of the SolarTotal Energy System Installed at Sandia Laboratories in Aibuquerque, N.Mex. 341
8. Electric and Thermal Performance of a 12.5 MWe Generai Electric Extraction Turbine 342
9. Designs for Providing Backup Power for Solar Rankine-CycleSystems 344
10. TheSunstrand 100kW Organic Rankine Turbine 348
11. Components of the Solar Heated, Rankine-Cycle Electric Power/3-Ton Air-Conditioning System 349
12. Flow Diagram of the Soiar Heated, Rankine-Cycle Electric Power/3-Ton Air-ConditioningSystem 350
13. United Technologies Design for Rankine CycleAir-Conditioner 351
14. Sun PowerSystemsFlow Diagram for 5HP, Rankine CycleAir-Conditioner. 352
15. Experimental Expander at General Electric 353
16. installed Costs of Steam Rankine Turbines 354
17. installed Costs of Organic Rankine Turbines 355
18. installed Costs of Field-Erected Boilers 356
19. Four Brayton-CycleSystems Compatible With SolarApplications 357
20. Components of a 500kW GasTurbine. 358

Figure No. *Page*

21. 50 MWe Closed-CycleGas Turbine 359
22. Section Through a Combined Gasand SteamTurbine Powerplant. 361
23. Artists'sRendering of Proposed Solar-HeatedAirTurbineGenerating Facility ...362
24. Temperature Dependence of Optimum Cycle Efficiencies. 363
25. The Effect of Waste-Heat Extraction on the Performance of Gas Turbines 364
26. Closed Regenerated-Cycle GasTurbine. ..364
27. installed Costs of Open-Cycie BraytonTurbines. 365
28. IdealStirlingand Ericsson Cycles.. 367
29. Calculated Performance of a 225-HP Stiriing Engine as a Function of the Specific PowerandWorking Gas 369
30. Phiiips Rhombic-DriveStirling Engine 37O
31. Swashplate Stirling Engine 371
32. Calculated Performance of a Philips Rhombic-DriveStirling Engine 371
33. Free-PistonStirlingand Ericsson Cycle Designs.. 372
34. SunpowerSystems Free-Piston Stirling and Ericsson Cycle Design Approach. 374
35. Free-PistonTotal EnergySystem 375
36. Free-PistonTotal EnergySystem 376
37. The Philips Design for a Stiriing EngineTotal EnergySystem 377
38. Heat Balance for the Stirling and Diesel Engine... 379
39. ElectricandThermal Output of a Stirling Engine.. 380
40. Weight-to-PowerRatios of EnginesWith Internal Combustion and of Stirl`ing Engines 381
41. Cost of Diesel Engines 381
42. 200-Watt,SunpowerStirling Engine, Mounted in ConcentratingCollector 383
43. identification of Thermionic ConverterComponents 384
44. Effect of ColiectorTemperature on Thermionic Efficiency 385
45. The Nitinol Engine. 386

Chapter IX
Energy Conversion With Heat Engines

BACKGROUND

The basic resource of solar energy is a constant temperature thermal source at approximately 10,000° F.* If this resource is to be used for anything other than lighting, the energy received must be converted into a more useful form. This paper examines three separate technologies for accomplishing this conversion:

1. Thermal devices which use sunlight to heat a fluid and direct this heated fluid either directly for applications requiring heat (such as space-heating or industrial processes) or to operate heat engines;
2. Photovoltaic devices which convert light directly into electricity; and
3. Photochemical devices which use light directly to drive chemical react ions.

This chapter compares the costs and performance of a number of specific heat-engine devices. Photovoltaic and photochemical processes are discussed in chapter X.

A large number of devices for converting thermal energy into mechanical energy and electricity have been developed over the years, and many of these could be converted for use with solar power. The only energy conversion cycles with which direct solar power would not be easily compatible are those requiring internal combustion—diesel engines, for example, would be cliff i cult to convert to a direct-solar application.

The following cycles are considered in some detail:

Rankine-cycle systems using organic working fluids such as Freon show the greatest promise for producing useful mechanical work from solar-heated fluids with temperatures in the range of 650 to 3700 C (1490 to 6980 F). The technology is reasonably well-developed and prototype devices are currently available in sizes ranging from kilowatts to many megawatts. An Israeli manufacturer has been selling small units for nearly a decade, and devices are now available from U.S. manufacturers. Small organic Rankine devices are similar to air-conditioners working in reverse and should be able to exhibit the reliability, simplicity, and low cost enjoyed by refrigeration equipment. Organic Rankine devices are able to make efficient use of the temperatures available, but the overall cycle efficiency is relatively low (5 to 20 percent) because of the low theoretical maximum efficiency of low-temperature heat engines, Low-temperature engines can, however, be operated from fluids produced by simple nontracking collectors and tracking collectors with low-concentration ratios and can use relatively inexpensive storage.

Steam Rankine devices are probably the most attractive contemporary heat-engine designs for temperatures in the range of 3700 to 550“C (6980 to 1,0220 F). (Reciprocating steam engines and saturated steam devices can also operate at lower temperatures.) A variety of devices are available and the technology is mature, although the market for small steam turbines has, until recently, been quite small and designs are somewhat outdated. Rankine-cycle devices operating with steam or other workin$_g$ fluids at temperatures higher than **600“C (1,1100 F) are possible, but the equipment must be made from special materials.**

***This is the effective “blackbody” radiation temperature of the Sun, not its actual surface tempera ture**

28-142 ( ) - 22

One difficulty with Rankine devices operating in conventional temperature regimes is that their generating efficiency falls sharply if waste heat is recovered.

Brayton-cycle (gas-turbine) engines operate at temperatures of 900"C (1 ,6520 F). Commercial devices are available in a variety of sizes, although efficient devices are typically only available in units producing more than 1 MW. The technology is well understood, although work is needed to develop reliable heat exchangers for solar receivers and regenerators needed to improve efficiency. The efficiency of Brayton-cycle devices is lower than steam Rankine efficiencies, even though the former operates with much higher initial temperatures. The high temperature of the exhaust, however, permits recovery of waste heat without excessive loss of generating efficiency.

Stirling-cycle piston devices are available on a prototype basis and can operate at temperatures in the range of 6500 to 800°C (1 ,2000 to 1,4700 F). Development work is needed to design a reliable commercial device. The engines will probably initially be best suited for applications where individual devices generate less than about 300 kilowatts. They may be able to achieve very high efficiences (40 to 50 percent).

Advanced Ericsson free-piston engines and highly regenerated Brayton devices with multiple stages of reheat are being investigated, and some units are in the development stage, Those cycles would operate in a temperature range of 7500 to 1,000"C (1,382 °to 1,8320 F) and also show promise of achieving high efficiency. The free-piston device may be able to achieve high efficiency with a small, relatively simple engine.

Research is also underway on several other advanced concepts including: Rankine-cycle devices operating with liquid metals, therm ionic devices (prototypes of these devices are available which operate in temperatures of 1,0000 to 1,500 "C; efficiency is poor, but they reject heat at temperatures high enough to drive other engines in a bottoming cycle), and thermoelectric sol **id-electrolyte** devices (systems have been tested which operate in the temperature range of 7500 to 1,5000 F, **but research is in a very early stage).**

The overall system efficiency of these cycles is illustrated in figure IX-I. The temperature ranges which can be produced by different types of collectors are also shown to indicate which collectors would be used to provide heat for the cycles.

THERMODYNAMICS

The cost of most solar systems depends critically on the cost of the collector field and the area of collectors required will depend directly on the efficiency of the energy conversion system employed. The efficiency of an ideal heat engine increases with the temperature available. If heat is available at a constant temperature T_h and is rejected at a constant temperature T_c, the maximum engine efficiency is given by the Carnot efficiency (η_c) where

$$\eta_c = 1 - (T_c/T_h) \qquad (1)$$

(Both temperatures must be expressed as absolute temperatures.) I n many cases, however, heat will be available only in the form of a heated fluid which cools as energy is extracted. If energy is extracted from a fluid which cools from T_h to T'_h, while giving up heat to the engine, in this case, the maximum efficiency is given by the ''ideal'' efficiency (η_i) where

$$\eta_i = 1 - \frac{T_c}{T_h - T'_h} \ln(T_h/T'_h) \qquad (2)$$

This is equal to the Carnot efficiency in the limit where $T_h = T_h'$.

In practical externally heated systems, it is not possible to make use of the maximum temperatures available from the combustion of fossil fuels, and the systems are certainly not capable of operating at the temperatures possible from high-performance solar concentrators. The major limitation is the materials available for the receiver in

Figure IX-1 .—Cycle Efficiencies of Heat Engines

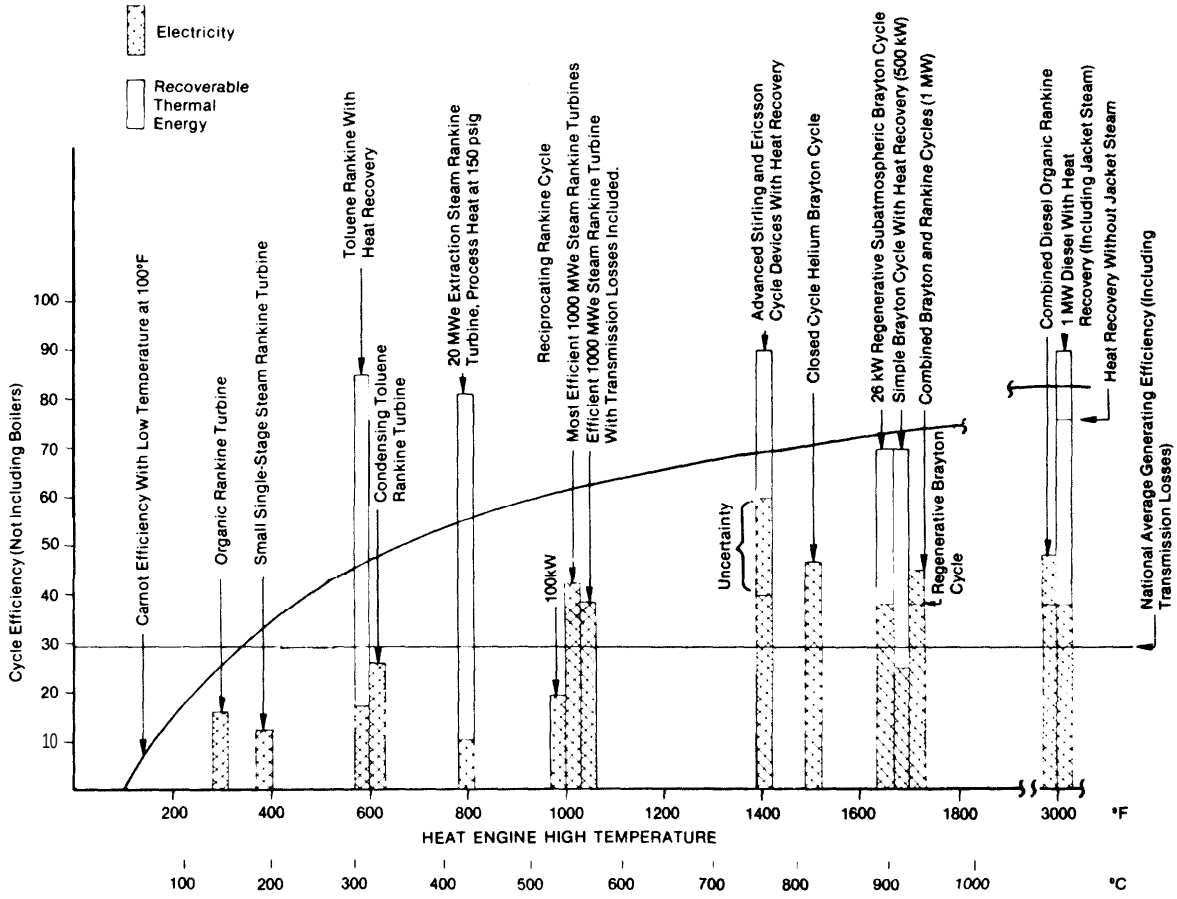

* Local temperatures In the combustion chamber only Exhaust gas is 9000 to 1,4000 F
Note References for Indlvidual estimates can be found In relevant sections of this chapter
SOURCE Prepared by OTA using manufacturer's data

the collector **system and** for engine components. Materials have been developed which can be used with gas turbines at temperatures in the range of 1,8000 F, and it may be possible to develop material (such as silicon nitride or silicon carbide) which can be used at temperatures as high as **2,0000 to 2,5000 F in the next decade. '** The cost of systems using such materials has not yet **been established,** however, and could be quite high.

In spite of the theoretical increase of efficiency with temperature, there are a number of reasons to believe that the use of the highest available temperature may not result in either the most inexpensive solar energy or even the highest efficiency. If both the cost and the efficiency of collectors or of storage devices increases rapidly with temperature, for example, there would be an optimum temperature which would

'Arthur L Robinson, "Making Gas Turbines From Brittle Materials, " Science, Vol. 188 (1975), p 40

minimize overall system costs. (The preceding chapter has presented evidence that collector costs may be nearly independent of the temperatures produced, but this result can only be tested with more experience.) Even if collector and storage costs are independent of temperature, however it may not be desirable to operate at the highest available temperature because the efficiency of real devices does not necessarily increase with increasing temperature. It can be seen from figure IX-I, for example, that the efficiency of steam turbines operating at 8000 to 1,0000 F can be higher than the efficiency of gas turbines operating at 1,4000 to 1,8000 F. A final choice of designs will require a net assessment of the economic attractiveness of the integrated system.

COGENERATION

The analysis of efficiency becomes significantly more complex when there is a need both for electricity and thermal energy. There are several alternatives to choose f rem:

- Generate electricity at the maximum possible efficiency and produce the thermal energy with a separate collector or with a fossil boiler;
- Generate electricity at the maximum possible efficiency and use a heat pump to produce the needed thermal energy (i. e., the heat engine would reject heat at the lowest temperature); or
- Use a heat engine which rejects heat at a temperature high enough to be useful for the thermal processes (cogeneration).

The optimum selection will depend critically on the nature of the thermal and electric loads and on the details of the operational performance of available heat engines.

If ideal systems were available, the second alternative would always define the maximum efficiency; the cogeneration system could equal the maximum efficiency only if the load had a unique ratio between thermal and electrical requirements defined by the waste-heat temperature. With other ratios, some part of the load would have to be met either with a backup "boiler" or with a heat engine using the highest possible electric-generating efficiency.

The complexity of the situation can be een in figure IX-2. This figure shows how the energy required by several types of systems varies as a function of the ratio between electric and thermal demands. The most efficient system is the device employing an efficient heat pump and an efficient heat engine. Commercial heat pumps are not able to produce temperatures above 100 "C, but most space-conditioning applications and many industrial processes can use heat at temperatures below 100°C. The seasonal coefficient of performance of space-conditioning heat pumps is typically below 2, however, and figure IX-2 shows that with this efficiency, cogeneration systems using engines with lower electric-generating efficiency could have better overall performance than high-efficiency engines driving heat pumps as long as the ratio of electric to thermal demand is below about 0.8. The least-efficient system shown, however, is the relatively low-efficiency engine with a backup boiler for providing thermal energy.

All that can be concluded from this analysis is that great care must be taken in designing systems to maximize efficiency. The decision depends heavily on the ratio between electric and thermal loads and the way in which this ratio varies over time. If electricity which exceeds local requirements can be sold to a utility, the perspective of a designer could change. Since the ratio between thermal and electric loads could be changed, in this way the overall efficiency of the system would always be reduced by increasing the electric to thermal ratio. In some circumstances, the greater value of the electricity generated would compensate for the extra cost. The addition of storage equipment could also permit some adjustment of the ratio between the thermal and electric demands placed on the energy conversion system.

Figure IX-2.—System Performance (Ratio of Electric and Thermal Energy Produced to Energy Entering the System)

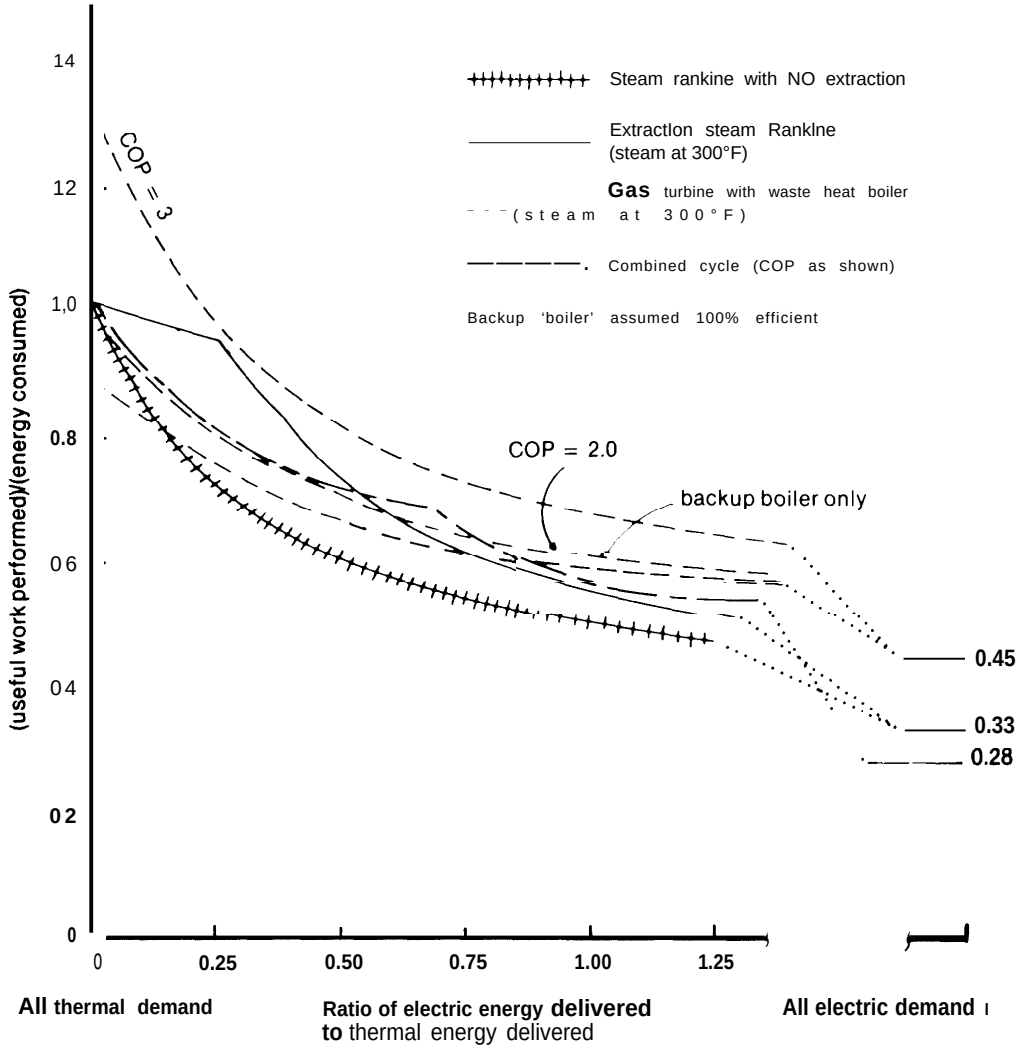

Note. It is possible for a heat pump to perform several units of useful work for each unit of energy consumed since the "energy consumed" by the engine does not count the energy in the ambient air used as a source of heat "pumped" by the device
SOURCE. Prepared by OTA using manufacturer's data

The following review of each cycle includes a brief description of the way the cycle works, an analysis of the prospects for using the cycle for cogeneration, an estimate of the cost and performance of different design options, and a summary of the current status of research, development, and manufacturing.

THE RANKINE CYCLE

The Rankine cycle has been used since the early 19th century for everything from steamboats to nuclear powerplants. It continues to be the most commonly used for generating stationary power. Designs have,

of course, improved over the years and a variety of devices are currently available.

Typical Rankine cycles operate as follows: a liquid is pumped under pressure into a boiler (which **could be a receiver** in a solar collector) where heat is added, boiling the liquid into a vapor (in some applications the vapor is also superheated); the vapor is then expanded over turbine blades or in a piston to produce mechanical energy; the low-pressure vapor which emerges from this expansion process is condensed to a liquid and pumped under pressure to the boiler where the cycle begins again. In sophisticated systems, efficiency can be increased **4 to 5 percent by preheating the water returning to the boiler with hot vapor extracted from high-temperature stages of the expansion** process. Water is the fluid most commonly used in the cycle, but other liquids can offer advantages at lower temperatures.

There is no fundamental limit to the temperatures which can be **used** in the Rankine cycle, but practical limits are imposed b} the steel alloys **used** in boilers and other components. The highest practical temperature with current technology is about 1,1000 F. Higher temperatures may be possible in the future using advanced materials, but a recent study by the Federal Power Commission concluded, "It would probably require *10* to *15* years to develop materials for use at temperatures above 1,2000°F."[2] **It may be possible to achieve much higher operating temperatures if liquid metals are used as a working fluid.**

Two techniques are used to extract heat from Rankine-cycle devices for direct thermal applications. Figure IX-3A shows a simple "backpressure" device in which low-pressure vapor is simply sent directly to the process loads. If organic fluids are employed, or if the process requiring thermal energy could contaminate the water used in the turbine, a heat exchanger is used which condenses the turbine fluid and transfers energy to a separate piping system used in spaceheating or industrial processes. The temperature of the steam produced is controlled by the pressure maintained at the end of the final turbine-expansion stage. This temperature can be changed somewhat to adjust to different loads, but a large amount of control is not possible. The system is most useful in situations where there is a relatively constant demand for process heat during the year; it does not require costly condensing equipment or cooling towers since this operation is being performed by the industrial **process or building heaters.** If there are periods when the heat is not required, however, condensing stages must be purchased to reject the unwanted heat. The backpressure devices producing steam at high pressure can significantly reduce the amount of electricity generated by a given rate of steam flow. A very large fraction of the total energy sent to the system can be recovered as steam heat or electricity, however, since the only losses in the system result from mechanical losses in the turbine, losses in the generator, and oil-cooler losses. These losses are quite small.

An alternative approach is illustrated in figure IX-3B. This system, called "extraction" turbine (or "pass out" turbine by the English and Europeans) is simply an ordinary condensing Rankine device with provision for extracting steam at some intermediate stage in the turbine-expansion process. The device has the advantage of permitting great flexibility in the temperature and quantity of steam produced but, of course, it requires the purchase of condensers, cooling towers, and relatively expensive low-pressure expansion stages. (Low-pressure stages are physically large since the volume of the steam has increased at the lower pressure, and thus these stages are more costly per unit output.)

Steam turbines are used in many industrial cogeneration installations, but are used by less than 1 percent of the "total energy" space-conditioning installations in the

---

[2] **John H. Nassikas, Chairman, Advisory Committee Report:** *Energy Conservation,* **Federal Power Commission, The National Power Survey, December 1974,** p **86.**

Figure IX-3.— Rankine-Cycle Devices With Heat Extraction

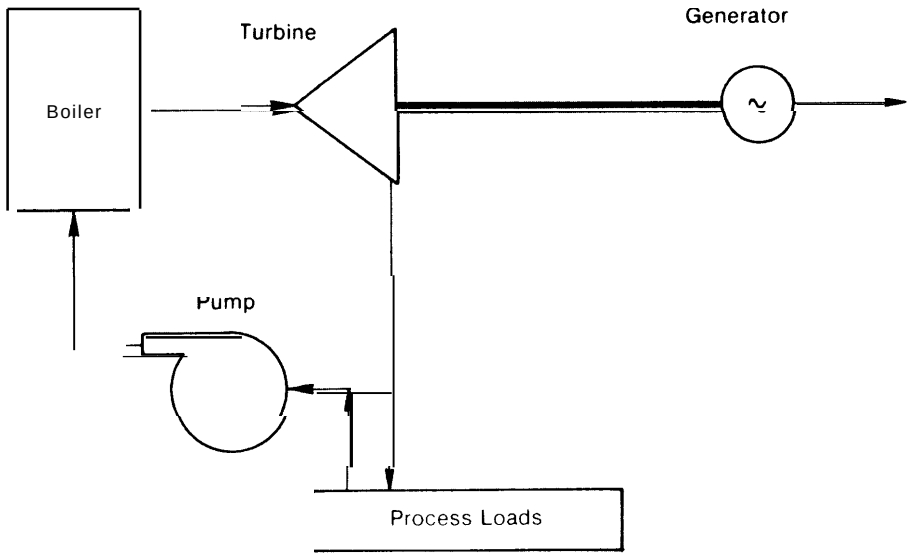

A. Backpressure Technique

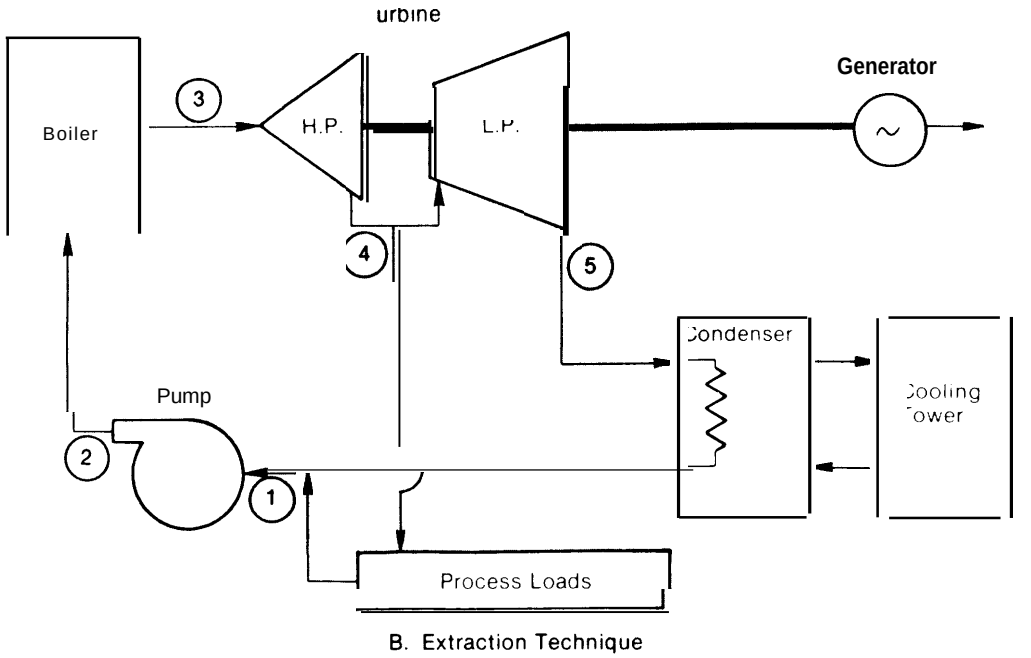

B. Extraction Technique

SOURCE Prepared by OTA using manufacturer's data

United States.[3] This is due to the fact that their efficiency is low when there is a small demand **for space heat, and that local ordinances frequently require experienced operators to be on duty whenever pressurized steam** is used. Extraction turbines are, however, frequently used in district heating systems in Europe where a variety of designs are employed. Stal-Laval apparently has a system which saves the expense of a condenser by using low-temperature steam to provide "heating of swimming pools, snow melting in winter, pavement heating, etc."[4]

One difficulty with all large steam turbines is that all of these devices require complex procedures when they are started and when they are turned off. Usually an hour or more is needed and skilled personnel must be present. The process is expensive and wastes energy. It could be a serious barrier to the use of these devices **in solar applications where systems must be turned on and** off each day. The problem could be alleviated if fossil fuel were used to fire the system when storage was exhausted.

Cycle Performance

The Rankine cycle permits a great range of design options and the system efficiencies vary widely. Efficiency depends principally on the following design features:

- The maximum temperature and the condensing temperature of the cycle.
- The working fluid used.
- The efficiency of the turbine (or piston) expansion process and the mechanical efficiency of the system.
- A number of features, such as the number of stages of expansion used, the use of feedwater heating, etc.

The overall system efficiencies of a variety of simple and regenerated Rankine-cycle devices (i.e., systems in which the working fluid is preheated by hot sections of the turbine before being sent to the boiler) are illustrated in figure IX-4. The extremely high efficiencies of large contemporary steam plants result from the use of many reheat cycles (i.e., adding heat to the working fluid at some stage during expansion) and extremely high pressures. Such sophistication cannot be afforded in small systems. The attractiveness of organic working fluids depends on the power levels required and the characteristics of available heat sources. Organics may prove to be more attractive than steam in small systems working at relatively low temperatures, although ideal steam cycles can produce competitive efficiencies. There are several reasons for this:

- The organic working fluids remain vaporized under temperature and pressure conditions where steam would be gin to condense. In steam systems, the turbine blades can be eroded severely by the impact of droplets on the rapidly moving blades. These droplets reduce system reliability and system life, as well as efficiency. This problem can be reduced if the turbine is divided into several stages with liquid removed between stages, but this adds to the system's costs
- The efficiency of the organic turbines proves to be greater than steam turbine efficiencies in many systems now operating at low-power levels (figure IX-5).
- The optimum turbine speed of organic systems is lower than equivalent steam systems (potentially saving costs).
- Organic systems are relatively simple compared to multiple-stage steam de-

[3] *1971 Total Energy Directory and Data Book,* **Volume 1, Total Energy Publishing Company, January 1971, pp. 40-66,**

[4] **I. G. C. Dryden, editor, *The* Efficient Use of *Energy,* IPC Science and Technology Press, Surrey, 1975, p. 355.**

'Dean T. Morgan and Jerry P. Davis (Thermo Electron Corporation), *High Efficiency Decentralized Electrical Power Generation Utilizing Diesel Engines Coupled With Organic Working Fluid Rankine-Cycle Engines Operating on Diesel-Reject Steam,* NSF Grant No. G 1-40774, November 1974, pp. 8-28.

Figure IX-4.—Temperature Dependence of Rankine-Cycle Devices

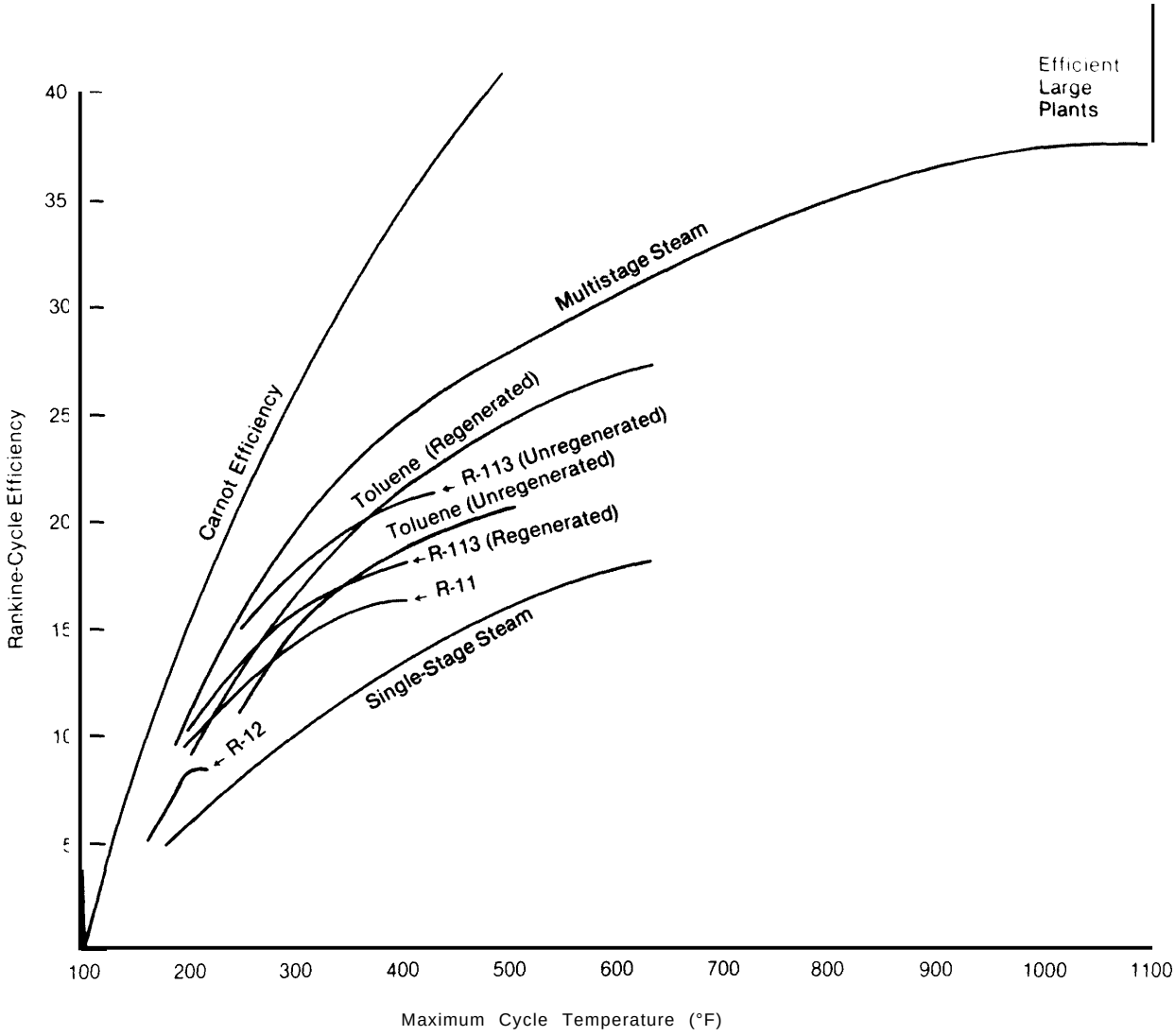

SOURCES Low-Temperature organic and steam efficiencies computed by R E Barber "Solar powered Rankine Cycle Engine Cycles —Characteristics and Costs, " June 1976, with the following assumptions" Expander efficiency 80 Percent, Pumpefficiency50 Percent, Mechanicalefficiency 95 Percent, Condensing temperature 95° •F, Regeneration efficiency 80 percent, High side pressure loss 5 percent, Low side pressure loss 8 percent

"High-temperature steam efficiencies from National Power Survey Advisory Panel Report On Energy Conservation, December 1974, page 102

vices **and can be constructed inexpensively from low-cost materials** if a noncorrosive working fluid **is used. The systems thus have the potential for** long life and high reliability at relatively low cost.

Thermodynamic properties can **be optimized by selection of an appropriate** organic working fluid for maximum efficiency and power; up to *35* percent greater power output can be achieved with organic relative to steam, depending on heat-source temperature characteristics.

The advantages of organics are counterbalanced to some extent by the fact that many of the fluids being studied are toxic or

Figure IX-5.—Rankine-Cycle Expander Efficiencies

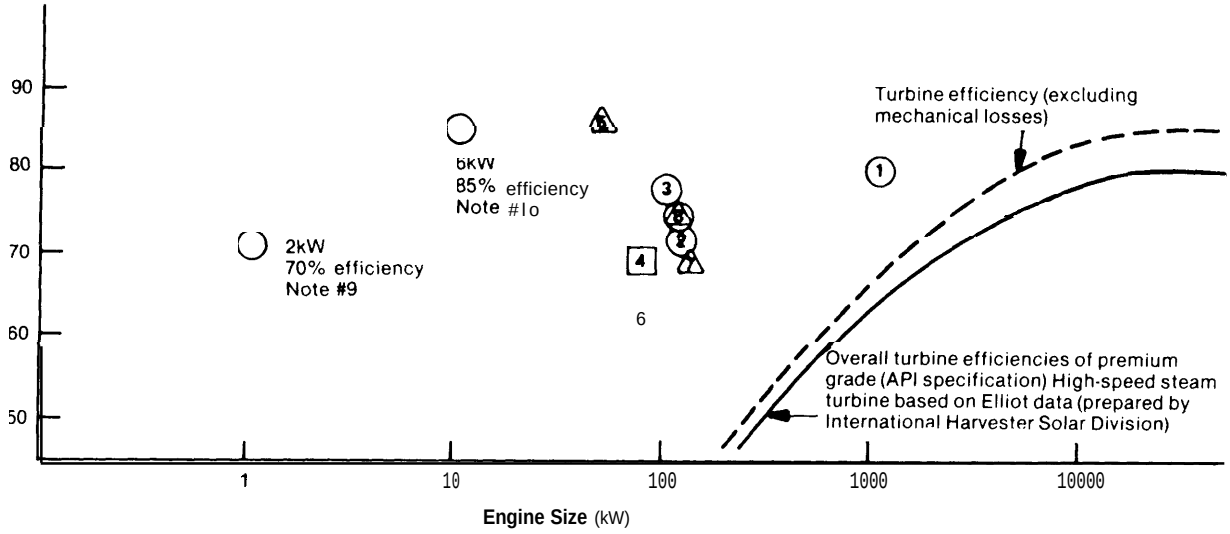

NOTES
1. Thermo-Electron F-85 Organic turbine 1009 kWe, Thermo-Electron, Nov., 1974 op. cit., pages 3-26.
2. Thermo-Electron F-85 Organic turbine 117 kWe, ibid., pp. 3-26.
3. Sustained Aviation 100 kWe toluene cycle, Bud Capron, Sunstrand, private communication, May 1976.
4. ALRC preproto, Jet Propulsion Laboratory, August 1975, op. cit., page 7-7.
5. Carter prototype, JPL, ibid.
6. Lear prototype, JPL, ibid.
7. SES Prototype, JPL, ibid.
8. TECo. FL-50 reciprocating preprototype, JPL, ibid.
9. Barber, op. cit.
10. Eckard, op. cit.

SOURCE. Prepared by OTA using manufacturer's data

flammable. The systems are sealed, however, and only small amounts of the fluid should leak from the cycle in a properly maintained system. Another potential drawback is the cost of the fluids, although fluid costs tend to be only a small fraction of overall system costs even if expensive fluids are used. (Water clearly has the advantage of being cheap, plentiful, and nontoxic.) The characteristics of a variety of materials which have been considered for turbine applications are shown in table IX-I.

Refrigerants are attractive for applications up to about 4000 F. They are nontoxic and the technology of Rankine systems using these materials is very well known since refrigerators are simply Rankine cycles operating in reverse. A number of other materials have been examined for application at temperatures up to about 8000 F, and the search for the desirable materials is continuing. In the temperature range of 7000 to 1,1000 F, there is no advantage in using fluids other than water.

Many early organic systems have had reliability problems resulting from failures of bearings and seals. These problems have apparently been overcome by several manufacturers, and high reliability is one of the selling points of organic Rankine engines designed for use in isolated regions. Reliable systems are presently quite expensive, however.

Turbine Efficiency

Turbine performance is limited by the size of the equipment as well as by the temperatures available. Figure IX-6 illustrates the efficiency with which turbines of varying

Table IX-1. —Organic Power-Cycle Working Fluids Used in System Testing or in Development

Fluid	Developers	Maximum boiler out let temperature 'F	Freezing point 'F	System test experience	Flammablllty	Current development underway	Comments
Freon 11	IHI (Japan) Sofretes (France) Barber-Nichols (US) United Tech-nologies (US)	-250	-168	Yes	Non-flammable	Yes (pri-marily IHI and Sofre tes)	Favorite low temperature work ing fluid; power and combined power/air-conditioning
Freon 114	TECUS)	-400	-137	Limited	Non-flammable	No	Combined power/air-conditioning
Freon 22	TECO (US)	425	-256	Yes	Non-flammable	No	Combined power/air-conditioning
Isobutane	Rogers Engineering (US)	-500	-217	Yes	Highly flammable	Yes	Other aliphatic hydrocarbons and as propane, butane are under con-sideration, primarily for geothermal, although Sofretes (France) has operated a propane system
Thiophene	TECO (US)	550	-37	Yes	Highly flammable	No	Vertical saturated vapor line on T-S Diagram (Isentropic fluid)
FC-75 (3 M Co)	Fairchild-Hiller (US)	-600	-76	Yes	Non-flammable	No	Requires very high regeneration generally lower efficiency than other fluids at given boiler outlet temper-ature
Chloro-benzenes	Dupont (US) Ormat (Israel)	-600	-49 (Monochloro-benzene)	Yes	Fire resistant	No Yes	The Ormat unit is the only Rankine-cycle system used commercially
Monoisopro-pyl Biphenyl	Ford Aero-neutronic (US)	-600	-68	Yes	Highly flammable	No	Requires high regeneration, very low condenser pressure
Fluorinol	TECO (US)	625-650	-82	Yes	Fire resistant	Yes	Extensive experience 7 years of system testing
Pyridine/ water mixture	Union Car-bide (US) Monsanto (US)	-700	75	No	Flammable	No	—
Dowtherm A	Aerojet-General (US)	-700-750	+ 54	Yes	Flammable	No	Requires high regeneration, very low condenser pressure
Toluene (CP-25)	Sunstrand (US)	-750	-140	Yes	Highly flammable	Yes	Extensive experience
Hexafluoro-benzene Octofluoro-benzene mixture	Aerojet-General (US)	-800-850	-40	Yes	Non-flammable	No	Very expensive fluid at present
Hexafluoro-benzene Pentafluoro-benzene mix-ture	Monsanto (US) TECO (US)	-800-850	-40	No	Non-flammable	Yes	Very expensive fluid at present

SOURCE Thermoelectron Corp

Figure IX-6.— Efficiency of Backpressure Steam Rankine Devices

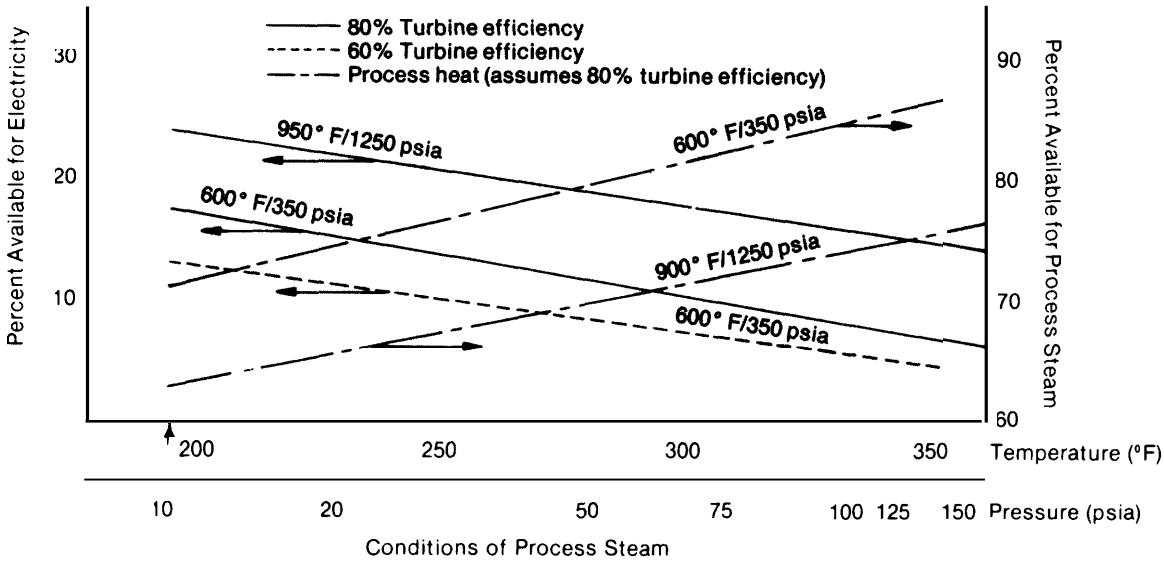

Assumptions

Working fluid: water
Turbine expansion efficiency 80% and 60% (as shown)
Pump efficiency 70%
Generator efficiency 95%
5% loss in blowdown
Inlet conditions 1250 psia/900 °F and 350 psia/600 °F (as shown)

SOURCE: Prepared by OTA.

sizes can **extract** the energy available in the fluids sent to them. It can be seen that with current designs the efficiencies of small systems are quite low. This is in part the necessary result of the fact that a clearance must be maintained between the turbine blades (or pistons) and their containment cylinders. (This is not a limiting factor for single-stage impulse turbines.) The fluid which can leak through this aperture does not perform work and thus limits efficiency. In smaller systems, the clearance area is a larger fraction of the total useful turbine blade area and thus smaller systems are more seriously affected by these effects. The figure illustrates, however, that several advanced turbine and reciprocating engine designs have been able to achieve relatively high efficiencies even at small sizes.

High turbine efficiencies have been demonstrated even in very small devices. Barber-Nichols Engineering Company, for example, has constructed a 2.5 hp turbine, operating on a refrigerant, which demonstrated a turbine efficiency of 72 percent.[6] A small multivane expander developed by the General Electric Co. has demonstrated efficiencies as high as 85 percent. [7] It is clear, therefore, that high-turbine performance is not necessarily restricted to large devices.

Performance With Heat Recovery

The decline in generating efficiency which is experienced by steam Rankine devices operating with backpressure and ex-

[6]Robert E. Barber, "Solar Air-Conditioning Systems Using Rankine Power CycleDesign and Test Results of Prototype Three-Ton Units, " *Proceedings,* **the Second Workshop on the Use of Solar Energy for the Cooling of Buildings, Los Angeles, Calif , Aug. 4-6, 1976, p. 91.**

[7]S. E. Eckard and J. A. Bond, "Performance Characteristics of a Three-Ton Rankine Powered Vapor Compression Air-Conditioner, " Proceedings, the Second Workshop on the Use of Solar Energy for the Cooling of Buildings, op. cit., p. 110.

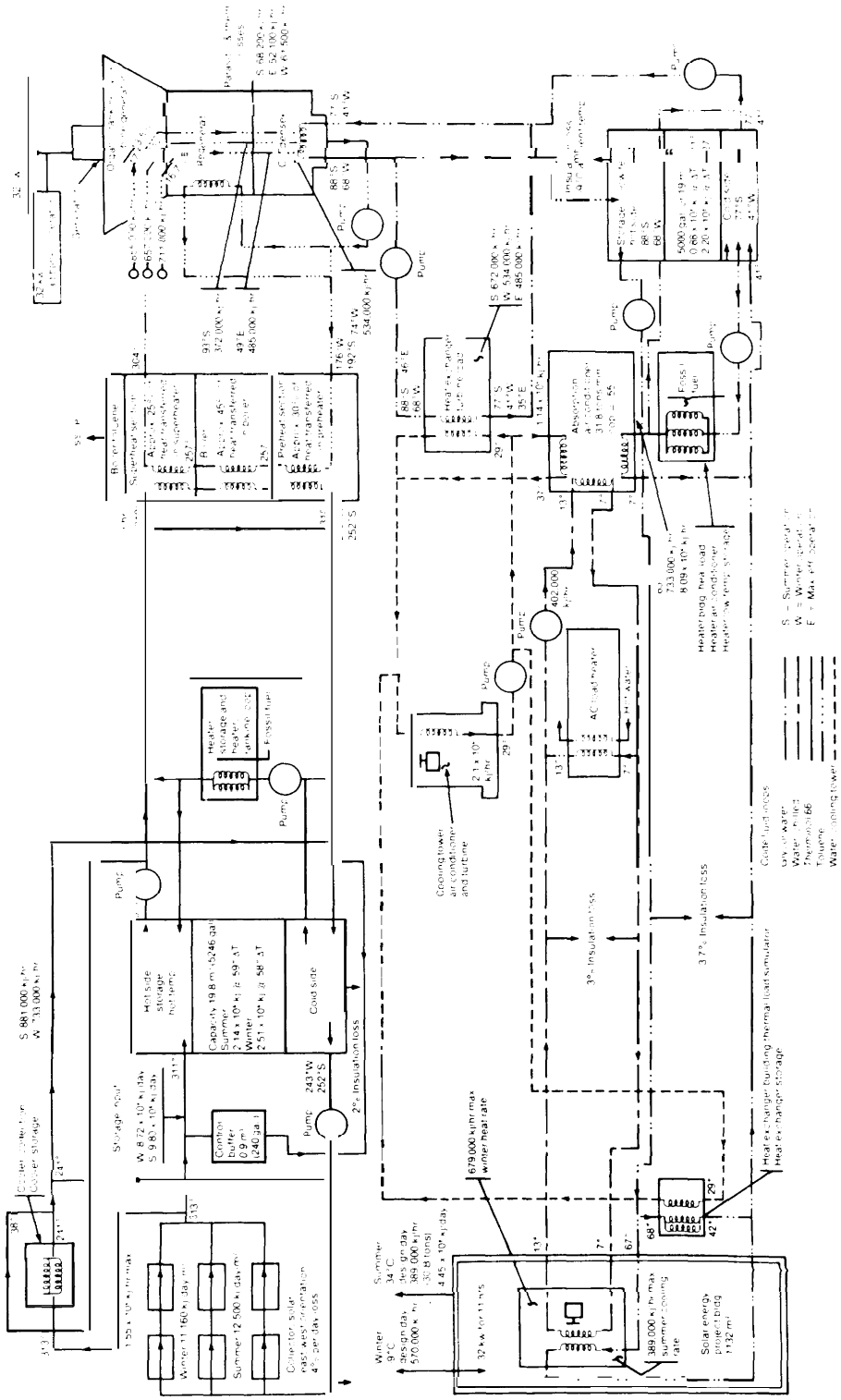

Figure IX-7.—Schematic Diagram of the Solar Total Energy System Installed at Sandia Laboratories in Albuquerque, N. Mex.

SOURCE: Sandia Laboratories, Solar Energy Projects Division "Solar Total Energy program Semiannual Report October 1975-March 1976 (June 1976) page 19 (SAND76-0205)

traction systems is shown in figures IX-7 and IX-8. The efficiencies shown in these figures represent a highly simplified analysis of the cycle and are intended only to illustrate the sensitivity of generating efficiency to changes in several important variables.

Figure IX-6, for example, illustrates the difficulty of using backpressure turbines with relatively low-inlet temperature systems to produce process steam at high pressures and temperatures. Generating efficiency falls off rapidly with increasing backpressure and

Figure IX-8.— Electric and Therma Performance of a 12.5 MW_e General Electric Extraction Turbine

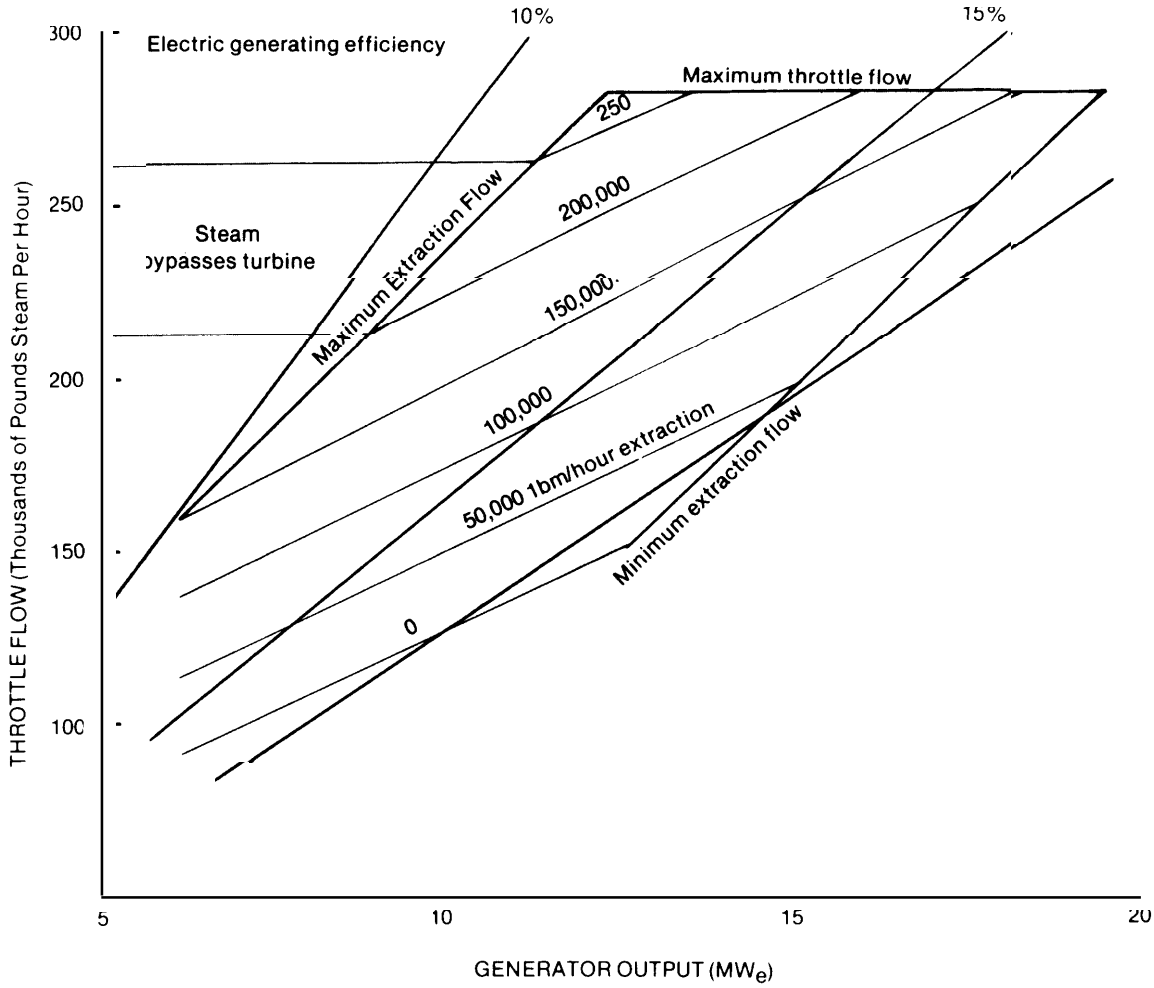

INLET CONDITIONS	400 psig, 750° F	maximum throttle flow: 280,000 lb/hour
OUTLET CONDITIONS	5 psia,	
EXTRACTION:	40 psig,	maximum extraction flow: 150,000 lb/hour
		minimum extraction flow: 5,500 lb/hour

SOURCE: GE Corp

the problem is exaggerated unless high-turbine efficiencies can be achieved.

Figure IX-7 illustrates the operation of a backpressure device using toluene as a working flu id which has been installed in Albuquerque to test the concept of solar-powered "total energy" systems. The system is equipped with a cooling tower since the heat extracted from the turbine is used for a heating and cooling application where loads are likely to vary greatly from day to day.

The performance of an extraction device is illustrated in figure IX-8, using a format which has become standard for presenting data about such systems.

Steam Rankine devices have been selected by all three contractors working on a design for DOE'S 10 MWe **solar central-receiver demonstration plants,**[8 9 10] **The** total energy test design developed by Sandia uses the toluene-based Rankine cycle shown in figure IX-7.

Performance With Backup Power Sources

It is possible to design Rankine-cycle systems which are capable of operating both from fossil fuels and from solar power. The temperatures used are low enough to permit piping energy from boilers operated from different sources to a single Rankine turbine device. *In* addition, the boilers can be externally fired so coal or other solid fuels can be easily used for backup fuel.

Two approaches are shown in figure IX-9A. The most efficient type of backup systems provide energy from a fossil-fired boiler or a storage unit at temperatures and pressures which are as close as possible to those of fluids supplied directly from the solar collectors. With this approach, the performance of the cycle is not changed by a shift from solar to backup power.

If a storage device capable of supplying temperatures close to those supplied directly from the solar collectors is not available at an acceptable price, it would be possible to use a turbine with two different inlets: one for high-temperature fluids received directly from the collectors, and one for lower temperature fluids received from storage. (This is shown by the dotted line in figure IX-9 A.) Steam turbines with multiple inlets have been available for many years, although most are relatively large.

Another approach which may be attractive under some circumstances would use the "hybrid" system illustrated in figure IX-9B. In this design, solar energy at relatively low temperatures is used to boil the working fluid and a fossil boiler is used to superheat the liquid to the turbine inlet conditions, This system takes advantage of the fact that the majority of the energy absorbed by conventional Rankine cycles is absorbed at a constant temperature while the liquid is converted into vapor. This system would take advantage of the relative simplicity of solar collectors operating at moderate temperatures, while permitting more efficient utilization of the high-flame temperatures available from burning fossil fuels.

The performance of these different approaches can be summarized in the following simplified analysis. If the fraction of the thermal energy applied to the system which leaves as mechanical energy through the high-pressure and low-pressure stages of the turbines is called η_{hp} and η_{lp}, respectively, and a fixed fraction f of the liquid vapor mixture emerging from the high-pressure stage is available to be sent to the low-pressure stage (the remainder being used to preheat the feedwater going to the boiler), the total electric output of the engine E is written as follows:

$$E = Q_b(\eta_{hp} \cdot \alpha\gamma\eta_{lp}). \quad (3)$$

Here Q_b is the energy available from the

'Quarterly Report No 1, Central Receiver Solar Thermal Power System, Phase 1, January 1976, Martin Marietta (ERDA Contract E(04-3)-1 110)

'Central Receiver Solar Thermal Power System, Phase 1, Final Report, January 1976, McDonnell-Douglas Astronautics Company (ERDA Contract E(04-3-1 108)

'"Solar Pilot Plant, Phase 1, Conceptual Design Report, Dec. 18, 1975, Honeywell, Inc. (ERDA Contract E(04-3)-1 109)

Figure IX-9.— Designs for Providing Backup Power for Solar Rankine-Cycle Systems

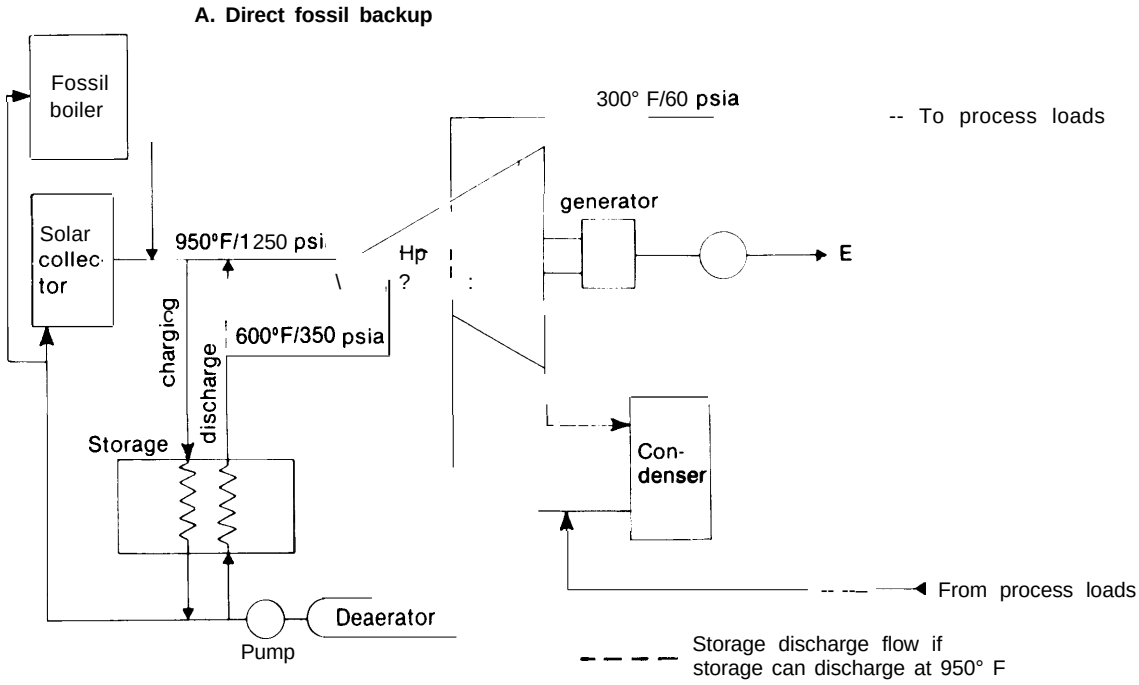

SOURCE. Prepared by OTA using manufacturer's data

boiler or from other sources and γ is the fraction of the energy available from the first turbine stage which is sent to the second stage. The remaining fraction $(1-\gamma)$ is available for process loads. Using the same notation, the energy available in the process heat Q_p can be written as follows:

$$Q_p = (1-\gamma)\,\alpha\, Q_b \qquad (4)$$

where α is a constant which is dependent on the temperature of the process heat stream. These parameters are illustrated in figure IX-9B. A sample set of these parameters is illustrated in table IX-2 for a turbine operating with 9500° F, 1,250 psia steam. The decrease in system performance resulting from the lower storage temperatures can be clearly seen. The performance can be improved considerably if the fossil boiler is used to raise the temperature to the original inlet conditions.

Table IX-2.—Efficiency of Steam Rankine Devices operated From Storage at Reduced Temperature

	Single-feed water regenerator	No feed water regenerator
Turbine inlet conditons		
η_{hp}	0.26	0.23
η_{lp}	0.11	0.11
$\eta_{hp} + \alpha\eta_{lp}$	0.34	0.30
α	2.68	2.94
f	0.82	1.00

Assumptions: generator efficiency = 95%
turbine efficiency = 800/0
pump efficiencies = 700/o
steam extracted for reheat at 300° F
inlet conditions 950° F/l 250 psia

η_{hp} = fraction of energy entering system which leaves as mechanical power in the first turbine stage

η_{lp} = fraction of energy entering system which leaves as mechanical power in the second turbine stage

α = 300° F energy available for process heat or low pressure turbines per unit of energy available from the high-pressure turbine

SOURCE Prepared by OTA using manufacturer's data.

The performance of designs using a fossil system to superheat the steam can be estimated from the efficiencies shown in table IX-2 and the ratios shown in table IX-3. This last table indicates the percentage of the energy entering the turbine which results from the boiling process. Boiling can represent a large fraction of the total energy requirements. The boiling temperature for this system shown is 5720 F. Using fossil fuels only to provide superheat would effectively increase the efficiency of converting fossil energy into electric output.

Table IX-3.—Ratio of Energy Required for Boiling to Total Energy Sent to Turbine

	Boiling temperature	Ratio
extraction turbine 950° F/l 250 psia (feedwater regeneration)	572° F	0.76
950° F/1250 psia(no feedwaterheat)	572° F	0.79
600° F/350 psia backpressure50 psia	486° F	0.91
400° F/150 psia backpressure50 psia	247° F	0.99

SOURCE: Prepared by OTA using manufacturer's data.

State of the Art

While Rankine-cycle engines are available in a variety of sizes, most of the development work in the United States in recent years has been directed to perfecting very large devices optimized for centralized utility applications. Because of the limited demand for small steam turbines, designs tend to be somewhat antique, although interest in smaller devices has been greatly increased in recent years.

A number of companies are working on devices capable of improving the performance and reducing the costs of small Rankine-cycle systems. Table IX-4 indicates some of the steam turbines which were identified by Sandia Laboratories in their review of devices for use in their total energy system. Extraction turbines and backpressure

Table IX-4.—Small Steam Rankine Turbines (1973 Dollars)

Capacity (kW)	cost ($ in thousands)	Source
2	2.0	5
	4.5	2
3	3.7	1
5	3.0	1
10	4.1	1
	3.8	5
	2.5	5
20	6.0	1
100	18.0	1
	11.3	1
	10.0	5
	9.6	6
	9.0	2
250	50.0	3
400	17.5	1
500	30.0	4
1000	100.0	2
	70.0	3
	45.0	4

SOURCE: Solar Total Energy Program Semiannual Report, April 1975- September 1975, Sandia Laboratories, Solar Energy Projects Division, April 1976, p. 96.

Source Legend:
1 - Coppus Engineering Corporation
2- The Terry Steam Turbine Company
3- The Trane Company, Murray Division
4- Turbodyne Corporation, Worthington Turbine Division
5- The O'Brien Machinery Company
6- Carling Turbine Blower Company

turbines are also available in the sizes of interest to intermediate total energy applications. Most interest in this research comes from several directions including:

1. A desire to develop devices to improve the fuel economy of diesel-generator sets and gas turbines through the use of a "combined-cycle" approach.
2. **Making use of waste heat from other industrial processes which is available at temperatures of 2500 to 1,0000 F.**
3. **Interest in exploiting geothermal energy** in the range of 2000 to 6000 F.
4. Interest in developing new engines for automobiles and other vehicles.

The Environmental Protection Agency and the State of California funded research on steam-powered automobiles, beginning in 1972, which led to the construction of two prototype steam vehicles–one built by Steam Power Systems and the other by Aerojet Liquid Rocket Company. There has also been a considerable amount of interest and investment in this area by private companies, including Lear, Carter Enterprises, and Saab-Scandia of Sweden. Table IX-5 summarizes the performance of some of the equipment which has been investigated.

Interest in small, combined-cycle systems has come mostly from companies which construct onsite generating facilities for remote locations (pipeline **pumping stations, offshore drilling rigs, etc.). international Harvester, Solar Division,** for example, believes that a steam turbine which operates on the heat exhaust from their 2.6 MWe "Centaur" gas turbines could produce an additional 1.3 MWe, resulting in increasing generating efficiency from 26.6 percent to over 40 percent. Similarly, a steam turbine which operates on the heat exhaust from their 7 MWe "Mars" unit, could produce an additional 3.3 MWe, resulting in increasing generating efficiency from 31.5 to 43.5 percent. The Thermo Electron Corp. and several other companies are working on small steam turbines for similar applications.[12]

In addition to development work on improved steam cycles, a considerable amount of attention is being directed to the development of organic Rankine cycles. Work in this area has also been stimulated primarily by a desire to develop high-efficiency, combined-cycle, generating systems. Geothermal and even space applications have also motivated research in organic cycles. Several large organic Rankine units are now in use in various parts of the world. DOE is supporting work in organic Rankine devices of intermediate sizes by the Sunstrand Corporation, Thermo-Electron Corporation, and Mechanical Technologies, Inc. A summary of the

[11] Jet **Propulsion Laboratory,** *An Automobile Power Systems Evaluation,* **August 1975, p. 7-2.**

[12] **Donald L. Kearns, Regional Manager,** Government Relations, International Harvester, Solar Division, letter dated Mar. 10, 1977.

Table IX-5.—Design and Performance Parameters of Current and Projected Rankine Automotive Power Systems

Manufacturer version working fluid	ALRC Preproto AEF-78	ALRC Proto H_2O	Carter Proto H_2O	Lear Proto H_2O	SES Proto H_2O	SPS Proto H_2O	TECo Preproto FL-50	Carter Projected H_2O	SES Projected H_2O	TECo Projected H_2O
Vapor generator										
Rated temp, °F	650	1000	1000	1100	1000	800	625	1050	1000	650
Rated pressure, psia	1000	500	2000	1100	1000	1000	700	2500	1000	800
Expander										
Type	Turbine	Turbine	Recip-Uni	Turbine	Recip-Uni	Recip-DAC	Recip-Uni	Recip-Uni	Recip-Uni	Recip-Uni
Configuration	SS	SS	Radial-4	SS	IL-4	IL-4	v-4'	IL-2	IL-4	IL-4
Valve type	N/A	N/A	PAP	N/A	Series-P	spool	HAP	PAP	Series-P	HAP
Admission	N/A	N/A	Fixed	N/A	Variable	Variable	Variable	Fixed	Variable	Variable
Disp. vol. (in^3)	N/A	N/A	35	N/A	135	49	184	30	68	50
Exp. ratio	N/D	N/D	11.3:1	35:1	Variable	Variable	Variable	12: 1	Variable	Variable
Max. rpm	42,000	60,000	5000	65,000	2500	2400	1800	6000	3200	2000
Condensor										
Inlet temp, °F	246	198	193	225	228	244	210	193	228	212
Inlet pressure, psia	33	11	10	19	20	27	35	10	20	32
Comp't efficiencies										
Feedwater pump, %	71	N/D	N/D	N/D	N/D	N/D	75	N/D	N/D	75
Vapor generator, %	85	90	90	N/D	N/D	N/D	87	N/D	N/D	87
Expander, %	68	N/D	86	62	68	N/D	75	N/D	N/D	75
System performance										
Max. bhp	106	60	70	107	150	65	145	90	90	60
Max. torque, ft-lb	N/D	N/D	N/D	620	755	N/D	N/D	N/D	600	N/D
Min. BSFC, lb/hp-hr	1.3	0.95	0.70	0.76	0.77	1.03	0.79	0.55	0.67	0.79
System weight (lbs)	N/D	665	425.5	765	857	835	1168	338	520	N ID

N/D = no data available
N/A = not applicable
Recip-Uni - reciprocating uniflow
Recip-DAC = double-acting compound
SS = single shaft
Series-P = series poppet
PAP = piston-actuated poppet
HAP = hydraulically-actuated popplet
Preproto type = test-stand version
Prototype = operational version
IL = in-line cylinder configuration
V - vee cylinder configuration

NOTE: Most of these programs are inactive.

SOURCE: Reproduced from "An Automobile Power Systems Evaluation: Volume II Technical Reports," Jet Propulsion Laboratory, August 1975, pages 7-7 and 7-8

characteristics of some of the devices which have been tested can be found in table IX-6.

The Sunstrand Corporation work started in 1961, and a number of units rated from 1.5 kilowatts up to 600 kilowatts have been operated successfully. One of the Sunstrand 100-kilowatt units has been modified to operate on **5500** F solar heat and has been tested at the Sandia Albuquerque Labs.

Development work at Thermo-Electron has been proceeding in several different areas. Among the organic Rankine cycle systems (ORCS) applications are a 10 MW combined steam/ORCS unit, a 4.3 MW diesel/ORCS unit, a 1.25 MW ORCS bottoming unit, a 400-kilowatt ORCS as a prime mover, and a 40-kilowatt ORCS bottoming unit for a truck diesel engine. [3] The turbines used by Thermo-Electron are typically axial impulse turbines and may have up to six stages. These designs all utilize either Fluorinol 50 or Fluorinol 85.

No large organic system is now being manufactured on a large scale, although a number of prototype units have been successfully operated. Engines ranging in size from a few kilowatts to a few megawatts are commercially available from Sunstrand, Sun Power, Kinetics Corporation, and other firms, although none is produced in large

[4] *Organ/c Rankine Cycle System for Power Generation from Low-Temperature Heat* **Sources, Thermoelectron Corporation, Sept. 10,1973.**

quantities. (A 100 kW Sundstrand unit is shown in figure **IX-10.)** The Ormat Corporation of Israel has sold a number of small organic Rankine-cycle devices for use where extremely high reliability is required (e. g., remote pipeline pumping stations). The high reliability guarantee results in a high initial cost. Several hundred of these units have been sold over the last 10 years and millions of hours of operating experience have been obtained.

Table IX-6.– Experimental Organic Rankine Turbines in the United States

	Sunstrand Aviation	Elliot . Turbo-machinery	Thermo-Electron	Thermo-Electron	Thermo-Electron
Working fluid	Toluene	Isobutane	Fluorinol-85	Fluorinol-50	Fluorinol-85
Turbine Inlet	550° F	350° F	550° F	600° F	550° F
Turbine type	Single-stage partial admission impulse turbine	3-stage double flow axial turbine	Single-stage axial flow impulse turbine	3-stage axial turbine	1-stage axial turbine
Unit-rated capacity	36 kWe	65 MWe	104 kWe	33 kW shaft	3 kWe

● Developed for geothermal application.
SOURCE: Prepared bv OTA using manufacturer's data,

Figure IX-10.— The Sunstrand 100 kW Organic Rankine Turbine

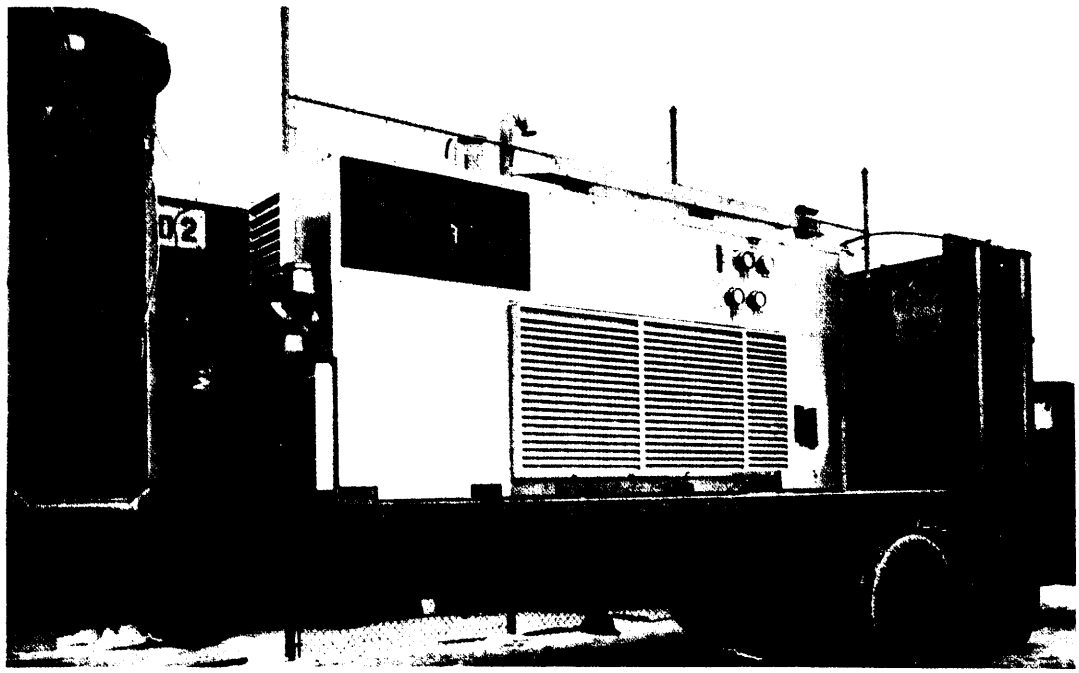

SOURCE: Sunstrand Aviation, Rockford, Ill., "100 kW Organic Rankine Cycle Total Energy System."

A number of firms are also developing organic Rankine devices which could be used for small residential or commercial installations. Several of the designs now under consideration are illustrated in figures IX-II through IX-I 5. Hundreds of hours of operating experience have been achieved with many of these devices, even when the units are unattended; the expanders have run very quietly and without vibration. (The sound is similar to the hum of an air-conditioner.)

The major development problem for these engines is demonstrating acceptable lifetimes and reliabilities. **A** critical element in this design work is finding an inexpensive safe working fluid with an acceptably long life. **A** variety of other design details (blade shapes, etc.) will undoubtedly also be improved for optimum performance. The technology of steam turbines has been developed over nearly a century. While organic systems can profit from this development work, much remains to be done to realize their full potential.

Figure IX-1 1 .—Components of the Solar Heated, Rankine-Cycle Electric Power/3-Ton Air-Conditioning System

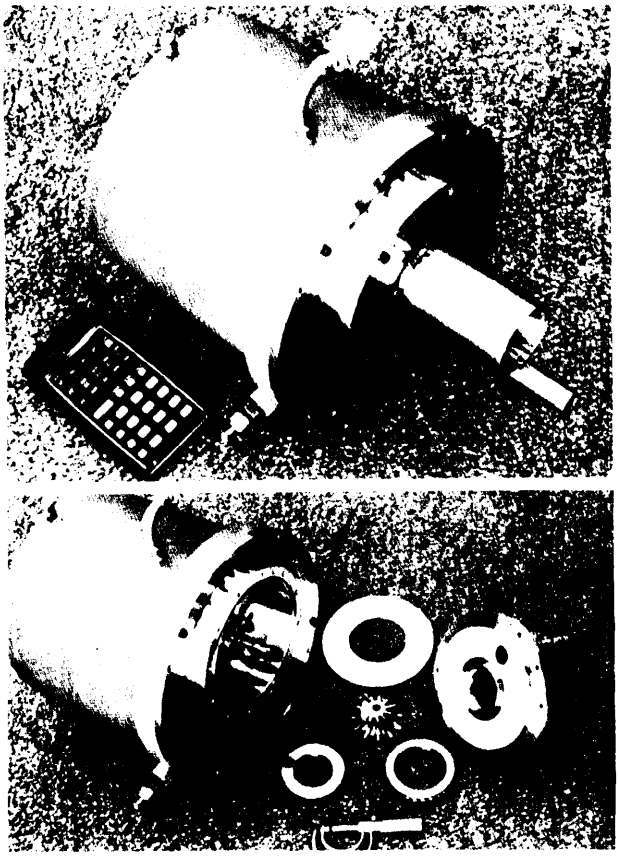

The Organic Turbine



Prototype Integrated System

SOURCE Robert E Barber, "Solar Air Conditioning Systems Using Rankine Power Cycles —Design and Test Results of a Prototype Three Ton Unit, " *Proceedings 01 the Second Workshop on the Use of Solar Energy for the Cooling of Buildings,* LOS Angeles, Calif., Aug 461975, PP 101 and 102

Figure IX-12.— Flow Diagram of the Solar Heated, Rankine-Cycle Electric power/3-Ton Air-Conditioning System

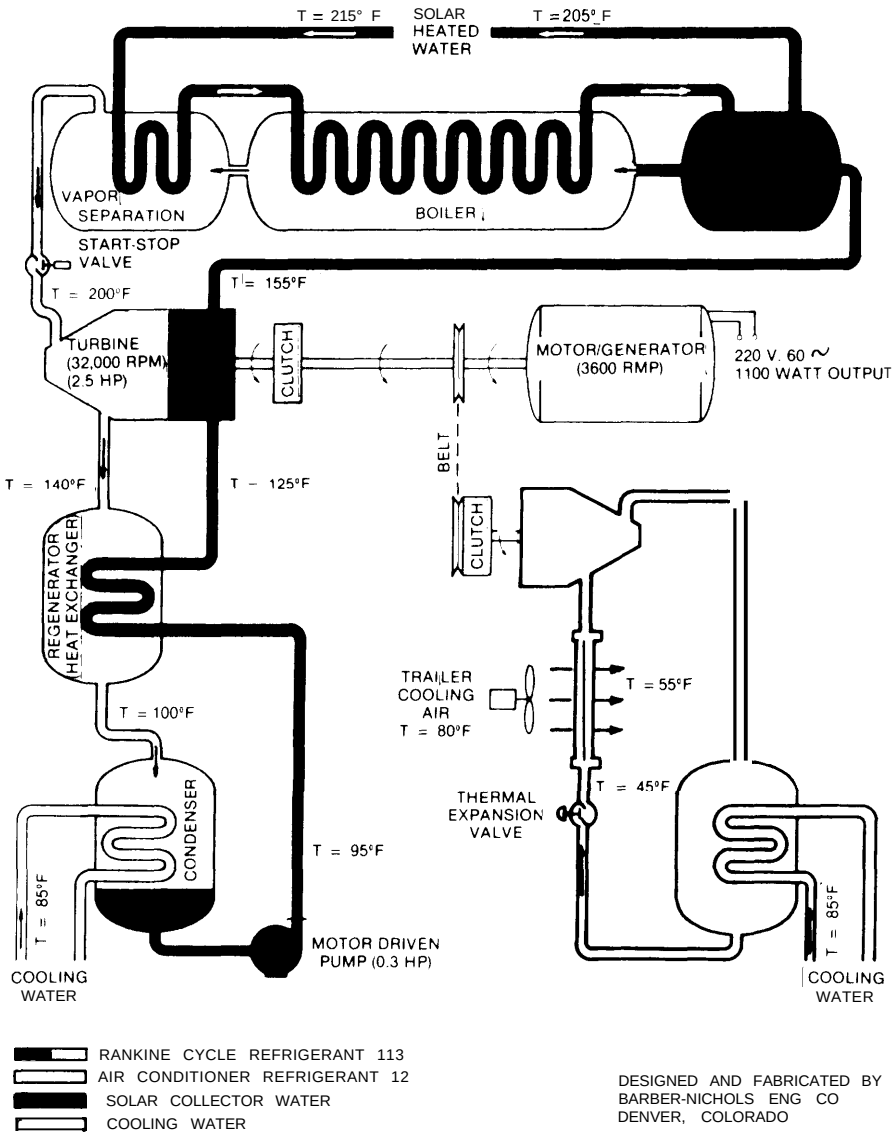

SOURCE: See figure IX-1 1.

Figure IX-13.— United Technologies Design for Rankine Cycle Air-Conditioner

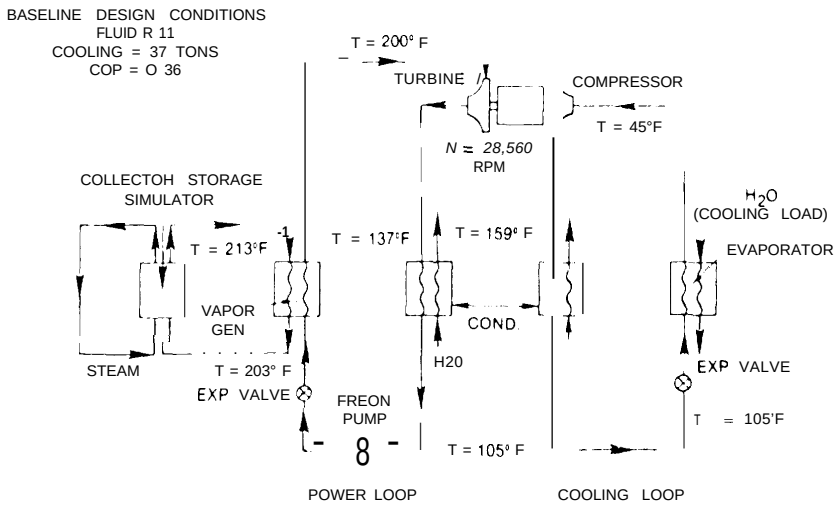

SOURCE" Fran Biancardi and Maurice Meader (United Aircraft Research Laboratories), "Demonstration of a 3-Ton Rankine Cycle-Powered Air-Conditioner," *Proceedings of the Second Workshop on the Use of Solar energy for the Cooling of Buildings,* LOS Angeles, Cal If., Aug. 4-6, 1975, p. 142.

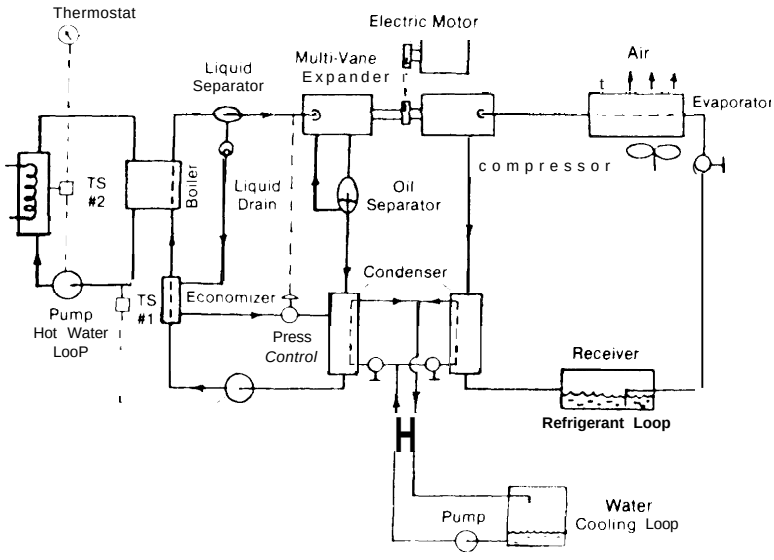

SOURCE S E Eckard and J A Bond (General Electric Company), "Performance Characteristics of a 3-Ton Rankine Powered Vapor.Compression Air. Conditioner," *Proceedings of the Second Workshop on the Use of Solar energy for the Cooling of Buildings,* **Los Angeles, Calif** , Aug. 4-6, 1975 p 129

Figure IX-14.—Sun Power Systems Flow Diagram for 5 HP, Rankine Cycle Air-Conditioner

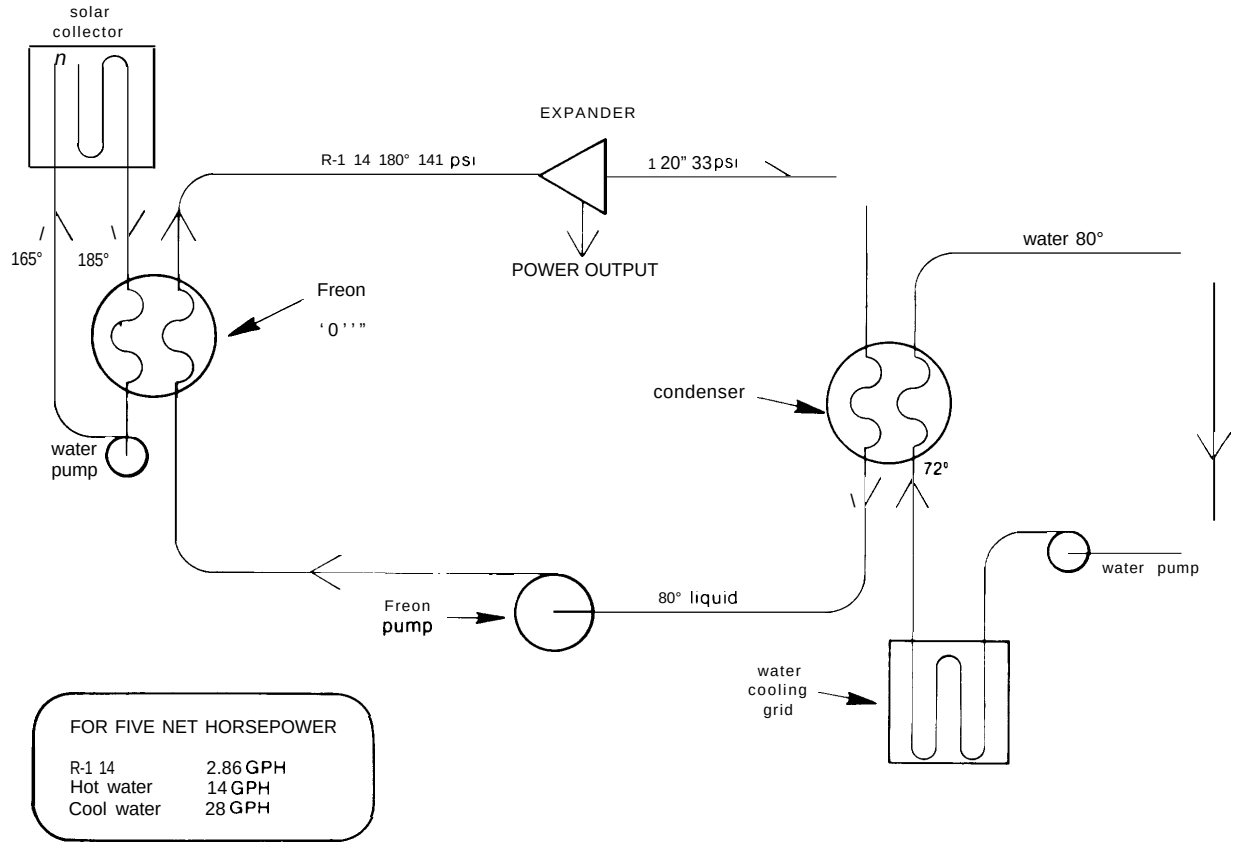

SOURCE: Sun Power Systems, Inc, Sarasota, Fla.

While improvements in design will certainly be forthcoming, there is no apparent technical barrier to developing a commercial device. The General Electric device, based on a multivane expander, is an adaptation of a system called **"ELEC-PAC" which was designed to be a simple, portable, total energy system** used to provide electricity and heat for mobile homes, boats, or recreational vehicles. The device is shown in figure IX-I **5,** together with some of the advantages of the device claimed by G. E.

It can be seen from the pictures in figure IX-11, that devices large enough to provide adequate power to a single-family home can be quite small. The entire device shown is not much larger than the air-conditioner which it would be designed to replace.

System Costs

The costs of Rankine-cycle devices in small sizes is difficult to estimate, as relatively few installations are presently being constructed; however, the cost of installing contemporary steam devices in the megawatt range can be estimated with fair accuracy. The costs can be divided into four general categories:

1. The cost of heat exchangers which may be required to transfer heat from the collector circuit or storage device to the working flu id in the turbine;
2. The cost of the turbine itself;
3. The cost of any condensing systems and cooling towers which are employed; and

Figure IX-15.– Experimental Expander at General Electric

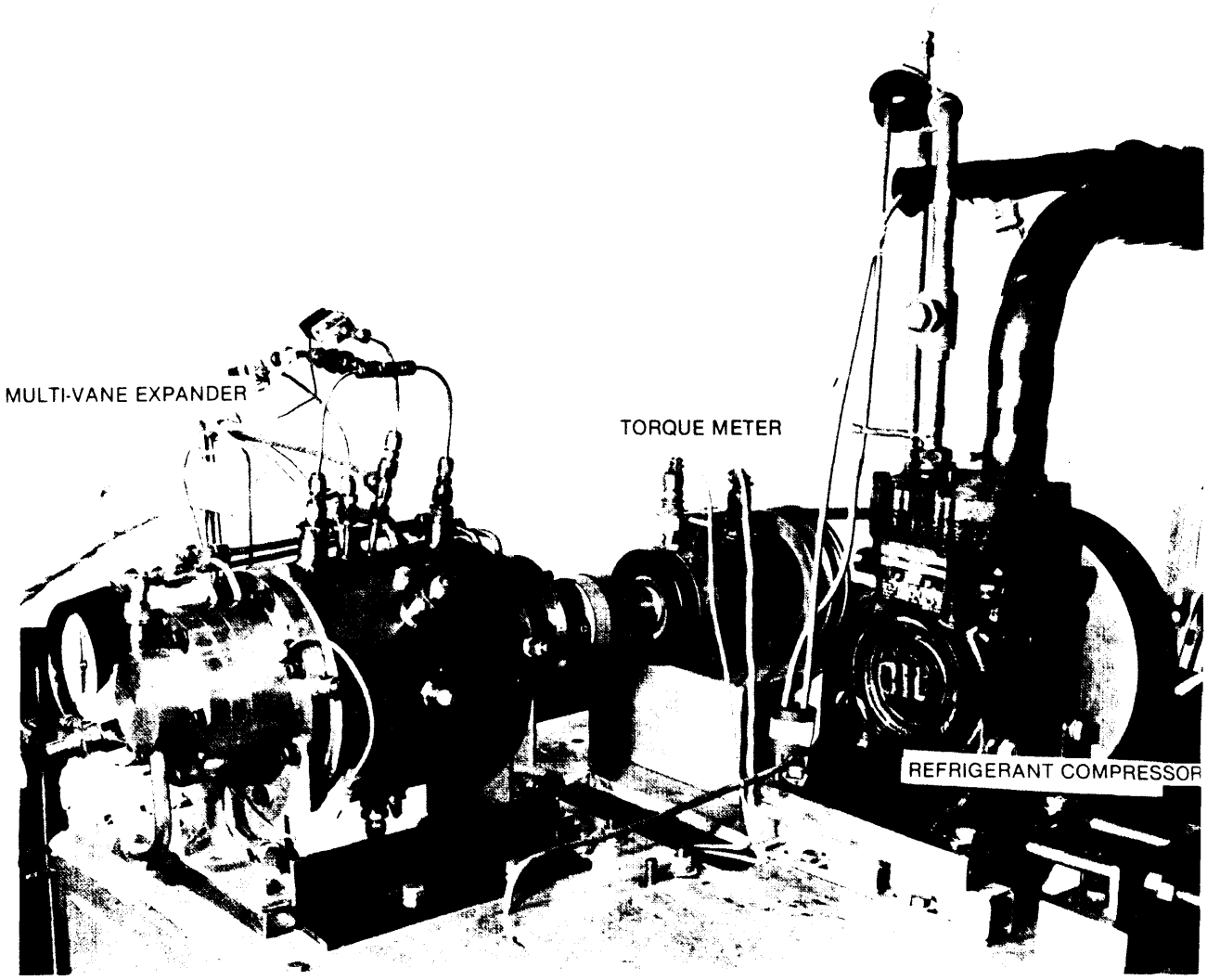

FEATURES AND CHARACTERISTICS OF MULTI VANE EXPANDER

High Brake Efficiency Over a Wide Range of
— Loading
— Speed
— Vapor Pressure

Tolerates Wide Range of Vapor Quality
— No Erosion Problems
— No Liquid Compression Problems

High Torque at Zero Speed
— Self Starting Under Load

Low Speed Compared to Turbine
— Matches May Load Requirements

Simple Construct Ion
— No Valves or Gears
— Simple Seals and Conventional Bearings

Permits Simple Control System
— Low Nose and Vibrat ion
— Good Life Potential

SOURCE Eckard and Bond, op cit , page 123

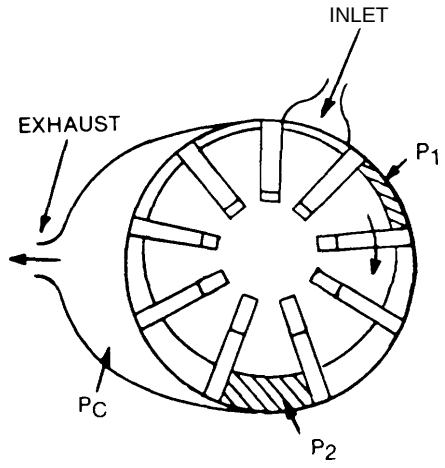

4. The cost of a backup boiler to provide energy when solar energy is not available.

It would be possible to reduce the cost of the smaller turbine units if large numbers are manufactured. The Jet Propulsion Laboratory estimated the costs of producing units in the 150-kilowatt size range if manufacturing were performed on the scale with which automotive engines are now produced. There estimates show a wholesale price of $13/kW and a retail price of $17/kW.[14] This is more than an order of magnitude lower than the cost of the units manufactured with conventional turbine manufacturing techniques.

The cost of condensing units and cooling towers required by condensing systems (in addition to the turbine costs shown in figure IX-16) are illustrated in figure IX-17. Costs range from about $90/kWe to about $30/kWe.

The cost of providing backup power to an onsite solar system is shown in figure IX-18. The costs assume the construction of field-erected boilers and include the cost of maintaining all of the ancillary equipment (pumps, feedwater treatment, etc.) required for the operation of the system. Approximately 10 percent of the cost shown is due to devices designed to remove sulphur and particulate from the boiler exhaust, and about 10 percent is traceable to systems for fuel-handling and storage.

[14] *An* **Automobile** *Power S ystems Evaluation,* **Jet Propulsion Laboratory, Volume 11, pp. 11-12.**

Figure IX-16.– Installed Costs of Steam Rankine Turbines

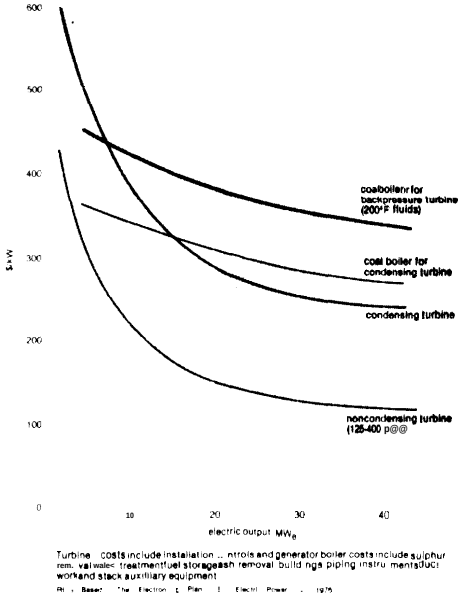

Turbine costs include installation ... ntrols and generator boiler costs include sulphur rem. valwales treatmentfuel storageash removal build.ngs piping instru mentsduct workand stack auxiliary equipment

Costs of Organic Rankine Systems

Estimating the potential cost of organic Rankine devices requires a considerable amount of speculation, since the few units now on the market are essentially handmade. I n spite of this, there is a fair degree of agreement about the price of devices manufactured in relatively small numbers. This pattern could change, however, if mass-production techniques were employed for the smaller units. The figure shows estimates indicating that production of 10,000 to 20,000 units per year could reduce the costs of units in the 5 to 10 kWe range to $200 to $300/kW, a price which compares favorably with the costs of even the larger steam- turbine systems. These costs are in general agreement with the costs of commercially available reciprocating and centrifugal air-conditioning systems. The comparison is a reasonable one for determining the potential future price of mass-produced organic Rankine turbines since the mass-produced air-conditioners employ a nearly identical technology.

THE BRAYTON CYCLE

The Brayton cycle (which uses gas at all phases in the thermodynamic cycle) has been used extensively for jet aircraft and is commonly used by utilities to provide power during peak demands. **Its** usefulness for peaking applications results from the low initial cost of the devices. Since they are relatively inefficient, however, they are typically used only to help meet peak loads and are typically used by utilities less than 1,000 hours per year.

The rising cost of liquid and gaseous fuels compatible with conventional Brayton-

Figure IX-17.— Installed Costs of Organic Rankine Turbines

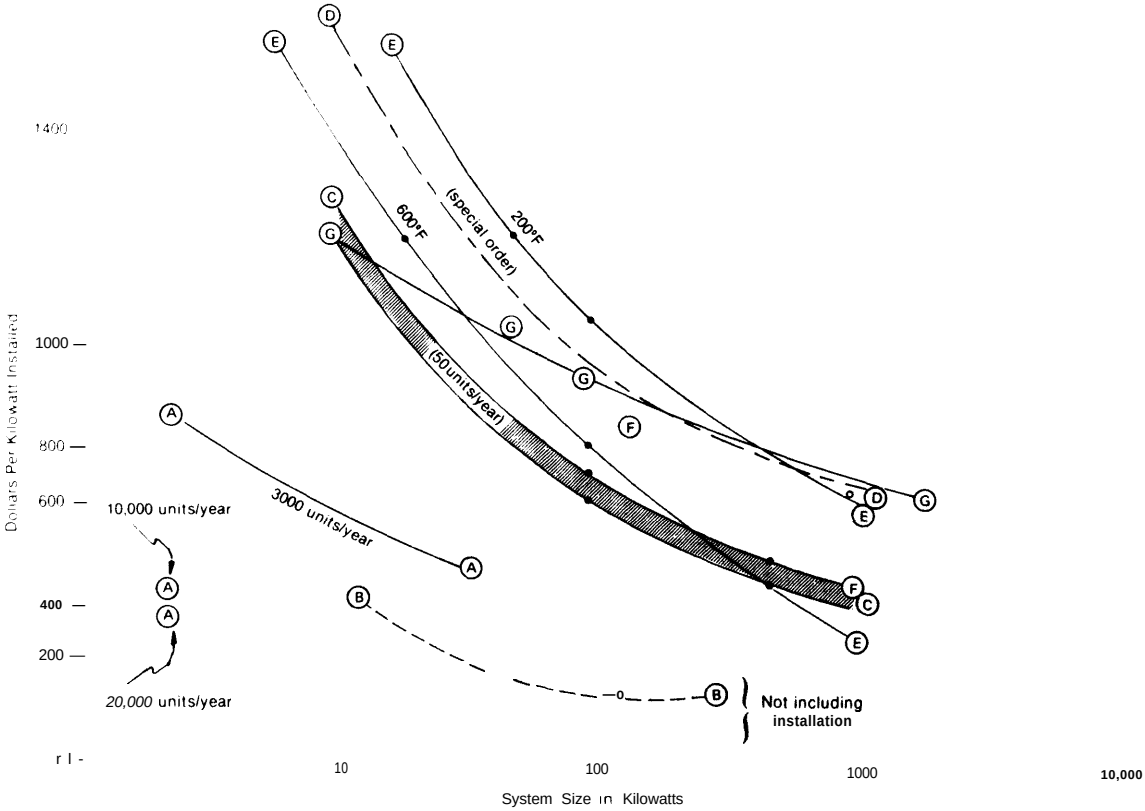

SOURCE
A Milton Van Horn (Market Manager General Electric Advanced energy group Private communication, June 1,1976) (estimates in 1975 dollars)
B Price of electric chillers (assume 17% cycle efficiency when operated as turbine generators)
c Beno Sternlicht (Mechanical Technology Inc) Power, June 1975 p 71
D Sun Power Systems Inc(Dr Minto, President, private communication April 19, 1976)
E R E Barber "Solar Powered Organic Rankine Cycle Engines Characteristics and Costs " June 1976
F Thermo Electron " H ighEfficiencyElectric Power Generation", November 1974, pages 59 and 510 (Increased by 9% for inflation since 1974)
G Sun Po-wer Systems price estimate 12/1/75 (200° F in let)

cycle gas turbines has dramatically increased operating expenses. There is, however, technology which shows promise of permitting Brayton-cycle devices to operate from external heat sources, such as coal (burned in a fluidized-bed boiler or a similar device) or from solar sources. The major barrier to the use of these devices has been the development of heat exchangers which are **capable of transmitting high temperatures into gaseous working fluids. Such materials now exist, but further** work is needed to develop commercial devices. The Boeing Corporation has recently completed a successful test which subjected the receiver to thermal-cycling equivalent to 30 years of operational performance. A heat exchanger, constructed from a material called Haynes 188, survived 10,560 cycles with a high temperature of 1,5000 F. Tests will also be done on a device using an Inconel 617 heat exchanger. [5] These materials will, however, be quite expensive.

As was the case with the Rankine-cycle devices, the maximum temperatures available for use with Brayton-cyc!e devices is limited by the performance of inexpensive

[15] John P Gintz, **Program Manager, Boeing Company Engineering and Construction Division,** *Closed-Cycle, High-Temperature Central Receiver Concept for Solar Electric Power,* **E PRI, February 1976.**

Figure IX-18.— Installed Costs of Field-Erected Boilers*

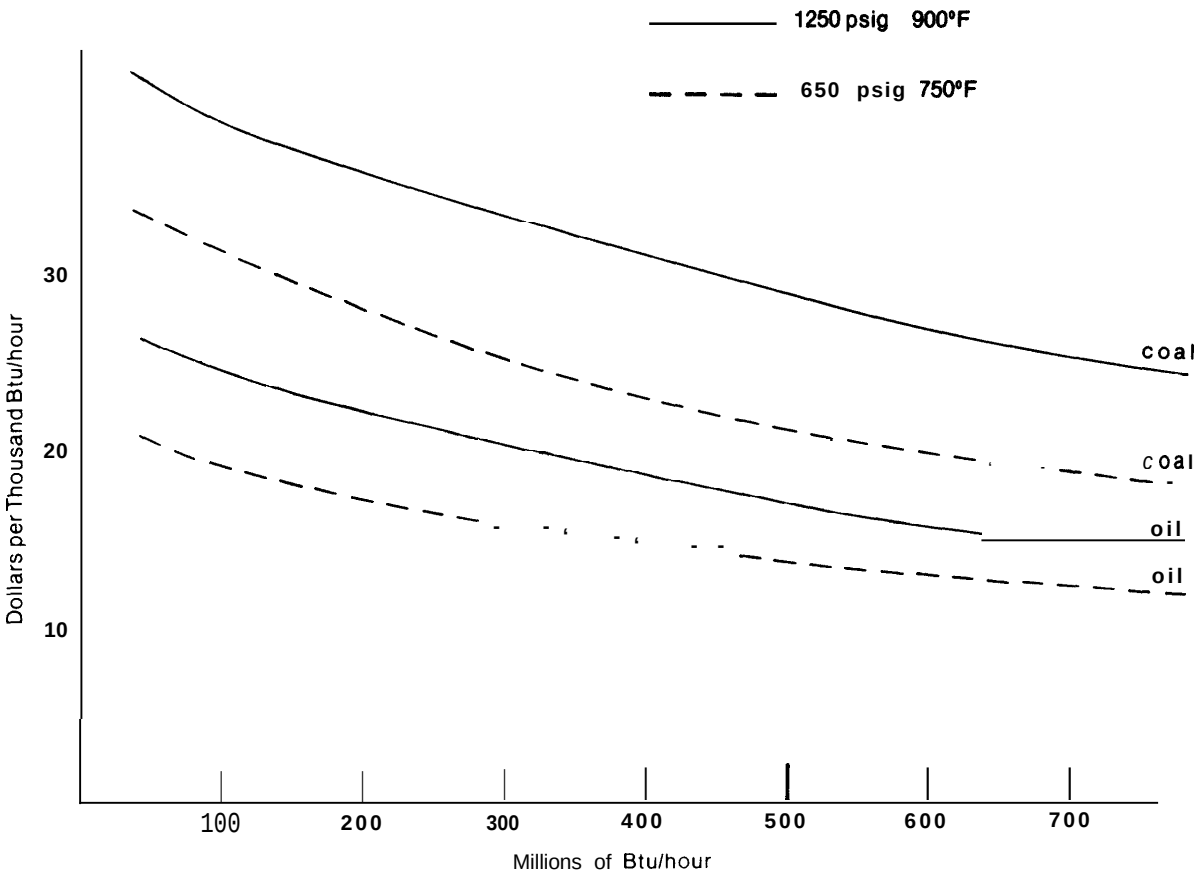

*Includes coal handling, ash removal, fuel storage, sulphur removal, and electrostatic precipitator for particulate removal, boiler erection, foundation, buildings, instruments, auxillary equipment, ductwork and stack, electric material in boiler building, feedwater sampling and treatment, fuel and ash handling, and indirect distribution costs.

SOURCE Thermo-Electron Corp A study of InplantElectric Power Generation of the Chemical, Petroleum Refining, and Paper and Pulp Industries, June 1976, pages 317 and 319

materials. Temperatures of 1,5000 F are typical for Brayton devices. Temperatures as high as 1,8000 F can be used, but this significantly shortens the expected operating life of the units.

The Brayton cycle has an advantage over Rankine-cycle devices when used in connection with a total energy or cogeneration system because the Brayton devices operate at much higher initial temperatures. This means that heat can be recovered from the exhaust gases without reducing generating efficiency to the extent that Rankine-cycle efficiencies are reduced.

Four different Brayton-cycle systems which may be of interest for solar energy applications are shown in figure IX-I 9. The simple cycle is the basis for most of the gas-turbine power generated in the United States. Commercial devices are available

Figure IX-19.— Four Brayton-Cycle Systems Compatible With Solar Applications

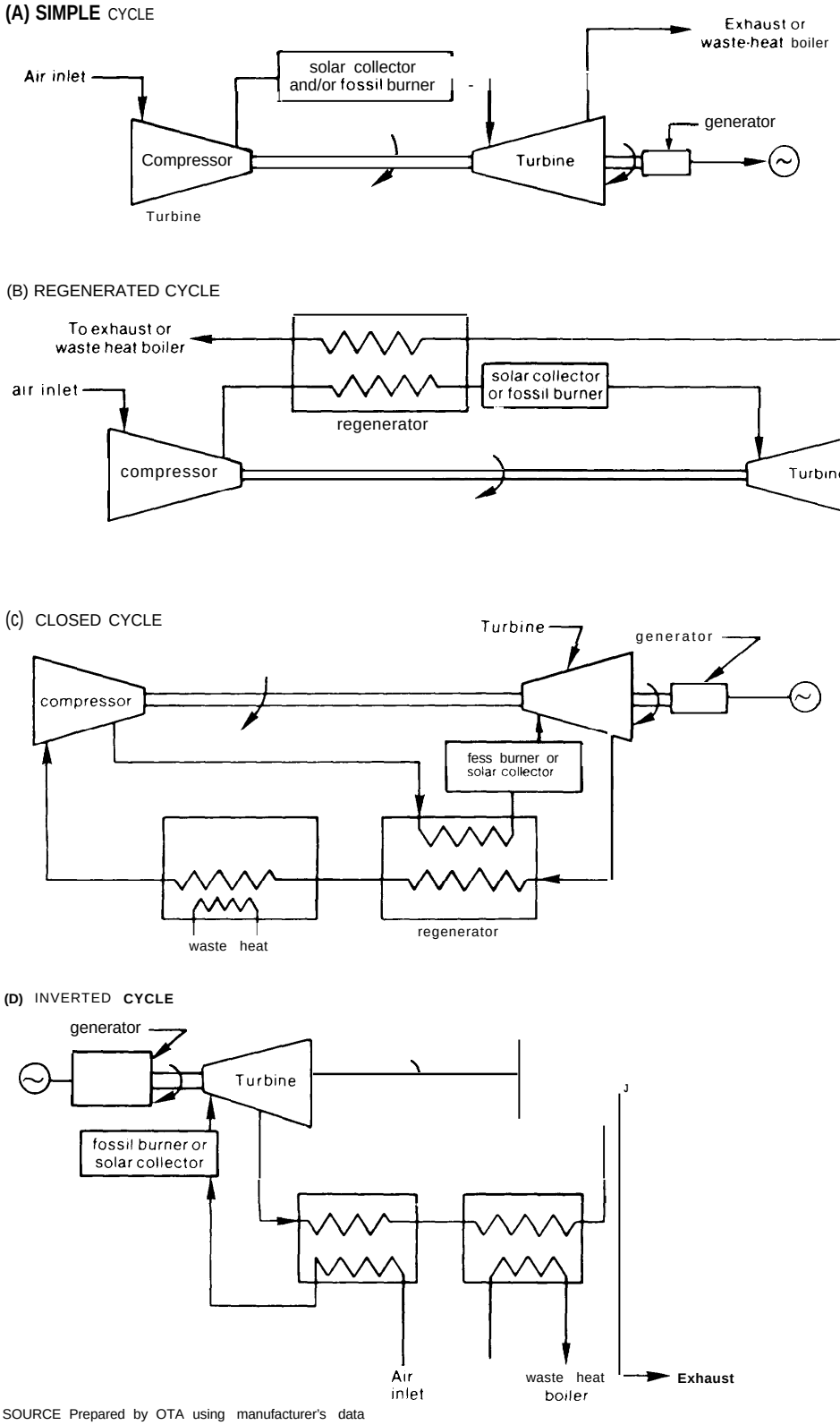

SOURCE Prepared by OTA using manufacturer's data

which range in size from a few kWe to over 50 MWe.[16]

Ambient air is compressed, heated, and expanded through a turbine. About two-thirds of the turbine's power is required to provide the compressor with power, with the remaining power being available for operating a generator. The gas is heated in a conventional device by igniting oil or natural gas in a combustion chamber. In a solar or an externally fired device this combustion chamber would be replaced with a high-temperature heat exchanger. A commercial single-cycle gas turbine is shown in figure IX-20.

A variety of techniques can be used to improve the efficiency of the cycle. The air can be cooled during the compression stage, for example, and the gas can be reheated during expansion in the turbine. The most effective technique for increasing efficiency, however, is to use the techniques in connection with a regenerator as shown in figure IX-19(B). In this design, the compressed air is preheated by the turbine exhaust before being heated in the combustion chamber or heat exchanger. Cycle efficiencies can be increased from *28* percent to nearly *38* percent in this way. The major barrier to the use of such devices, however, is the cost and reliability of the regenerative heat exchangers.

[16] G. Samuels and J. T. Meador, *M/US Technology Evaluation:* Prime Movers, Oak Ridge National Laboratory (OR NL-HUD/MIUS-I 1), April 1974, p. 22.

Figure IX-20.—Components of a 500kW Gas Turbine

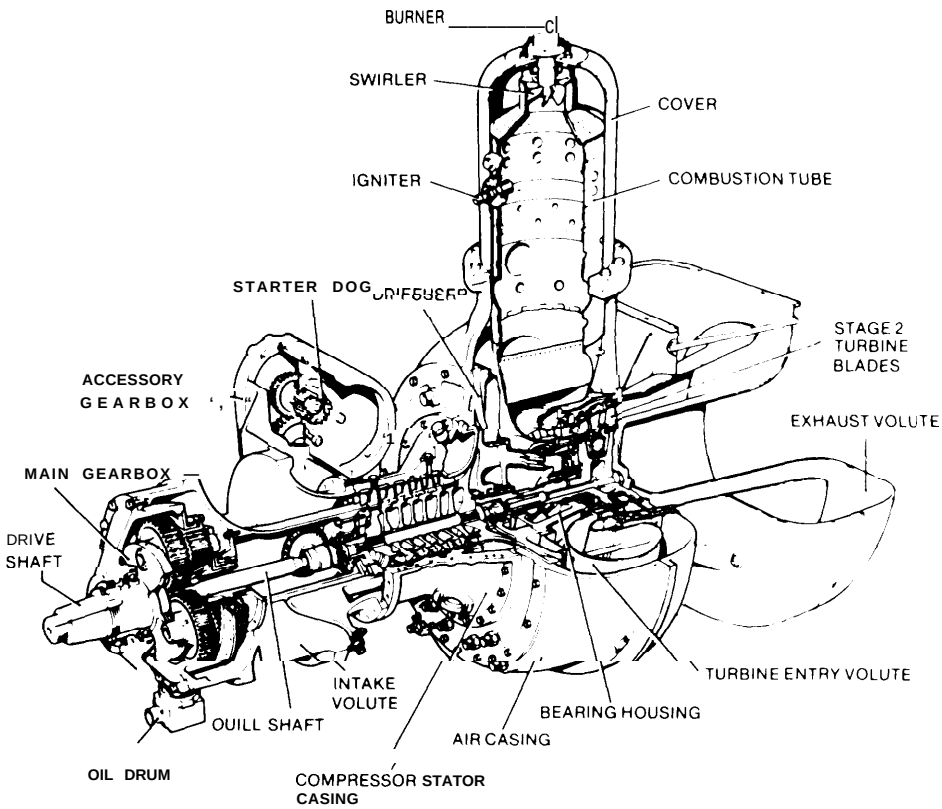

SOURCE. Electrical Research Association, Limited "Electric Power Plant International 1975-1976 edition" Surrey, England, 1975 (Acknowledgements to Centrax LTD)

Commercial regenerative heaters can be guaranteed only if they are not turned on-and-off frequently, since the materials used fail if they are repeatedly heated and cooled. This limitation is, of course, inconsistent with using the devices for meeting intermittent loads in utility peaking applications, and it is inconsistent with the demands of a solar installation where the available energy is intermittent. Progress in developing reliable regenerators is being made, however, and the Garrett Corporation claims to have a device which is capable of withstanding large numbers of on-and-off cycles without damage. [17]

A third approach to the Brayton cycle is to close the cycle as shown in figure IX-19(C). In this device, the gas emerging from the turbine is sent back to the compressor instead of being exhausted. The device must be fired externally since the circuit must be closed. The closed cycle has a number of advantages, the most important of which is that it permits the use of gases other than air. Helium and other light gases can be used to improve heat-exchange characteristics. The closed cycle can also be used at higher pressures with the advantage that smaller turbines can be used. No penalty need be paid in efficiency for using gases other than air. [18,19]

While a few closed-cycle, gas-turbine devices have been built in the United States (a closed-cycle device developed for NASA by the Garrett Corporation has been operating or under test for about 15 years), several German and Swiss firms have had devices operating from coal for a number of years. The cycle is being investigated for use with gas-cooled nuclear reactors. A picture of a large, closed-cycle plant now being checked out in Oberhausen, Germany, is shown in figure IX-21. A closed-cycle gas-turbine system is being investigated by EPRI for a central receiver solar application .20

The "inverted" Brayton cycle illustrated in figure IX-19(D) may offer some advantages when used as a bottoming cycle for

[17] Patrick G Stone, Garrett Corporation, private communication, December 1975

[18] Samuels, **op. cit , p. 42**

[19] R. **M. E, Diamant,** *Total Energy,* **pergamon Press,** pp. **229-232**

[20] G **intz, op. cit.**

Figure IX-21 .—50 MW$_e$ Closed-Cycle Gas Turbine

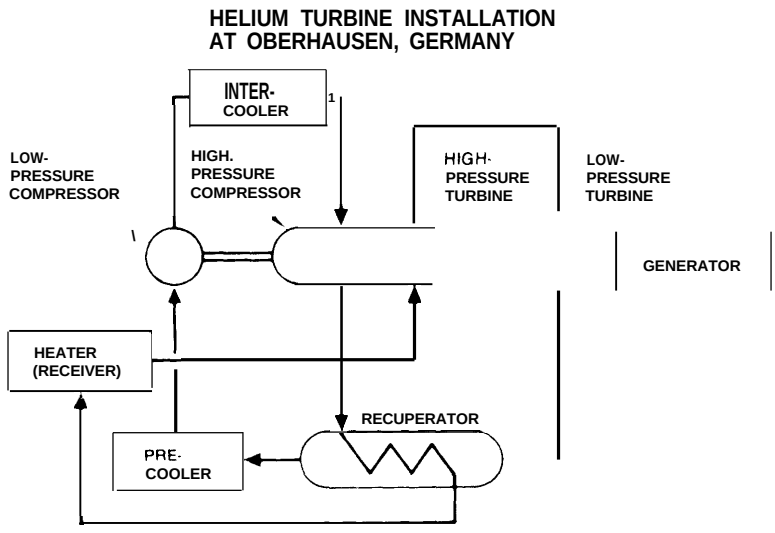

SOURCE Gintz, John R (Boeing Company, Engineering and Construction Division), "Closed Cycle High Temperature Central Receiver Concept for Solar Electric Power, " February 1976, EPRI

any process generating hot air at ambient pressures.[21] **It may also have some advan-**tages in small solar applications. The device operates by heating ambient air in a heat exchanger before the gas is sent to the turbine. The hot air expands through the turbine into a vacuum produced by a compressor (which acts like a pump in this application), which exhausts the gas at ambient pressure in an open-cycle system or returns it to the heat source in a closed-cycle system. The efficiency of the inverted cycles can be as high as similar devices operating at higher pressures. The advantage of such a device for solar applications is that the heat exchanger can operate at atmospheric pressure. This greatly reduces the demands placed on the materials which transfer high temperatures to the engine. The major disadvantage of this approach is that the density of the gas is much lower than in a pressurized system and thus the turbine units must be relatively large. This is less of a restriction in small sizes, however, since small turbines must be relatively larger per-unit-energy output to minimize the effect of gas escaping around the ends of the turbine blades. Another disadvantage of the inverted cycle is that a heat-rejection heat exchanger is required in addition to the heat exchanger where external heat is applied. This is not a problem in applications where a second heat exchanger is required for a heat-recovery system. Heat exchangers will need to be relatively large, however, because of the low density of the gases used in the cycle.

Few inverted-cycle devices have been constructed, but a prototype, developed by the Garrett Corporation for a gas-fired heat pump, has operated successfully since November 1976. The designers claim that an efficiency of over 38 percent has been measured on this device in initial tests .22

Another approach which can be used to increase the generating efficiency of Brayton-cycle devices is to recover the energy in the turbine exhaust in a boiler and use the heated fluids generated **in this way to drive a steam or gas turbine. Overall efficiencies as high as 48 percent** in large units can be achieved in this way.[23]

Waste heat can be recovered from gas turbines in two ways. The most commonly used technique is simply to install a large boiler in the path of the turbine exhaust. Heat can also be extracted between compression stages if more than one compressor is used. One system for removing thermal energy from a Brayton-cycle device is shown **in figure IX-22.**

Two approaches have been proposed for using Brayton-cycle turbines in solar applications. Small units could be mounted at the focus of individual tracking-collectors, or they could be located at the counterweight position of these collectors with heat transferred to the units through a heat pipe. Heat pipes using sodium vapor have been developed which operate successfully in the temperature regimes necessary.

In a central receiver used for larger systems, it would be possible to pipe the hot gases to a heat exchanger on top of a receiver tower. This is the approach being examined by EPRI (figure IX-23).

System Efficiency

The optimum cycle efficiencies of simple and regenerative Brayton cycles are shown in figure IX-24 as a function of the temperature available. (It is important to recognize, however, that the comparison is made only for turbines operating at full load; operating efficiencies at part load may compare quite differently.) The great advantage of developing materials capable of operating at high temperatures can clearly be seen. The performance of actual units is summarized in table IX-7. It can be seen that the efficiency

[21] D. **C. Wilson, and N. R. Dunteman,** *The* **Inverted** *Brayton Cycle for WasteHeat Utilization,* **ASME publication, 73 CT-90, April 1973,**

[22] Patrick G. Stone, Garrett Corporation, Private communication, December 1976.

[23] Morgan, **op. cit.,** pp. 4-9.

Figure IX-22.—Section Through a Combined Gas and Steam Turbine Powerplant

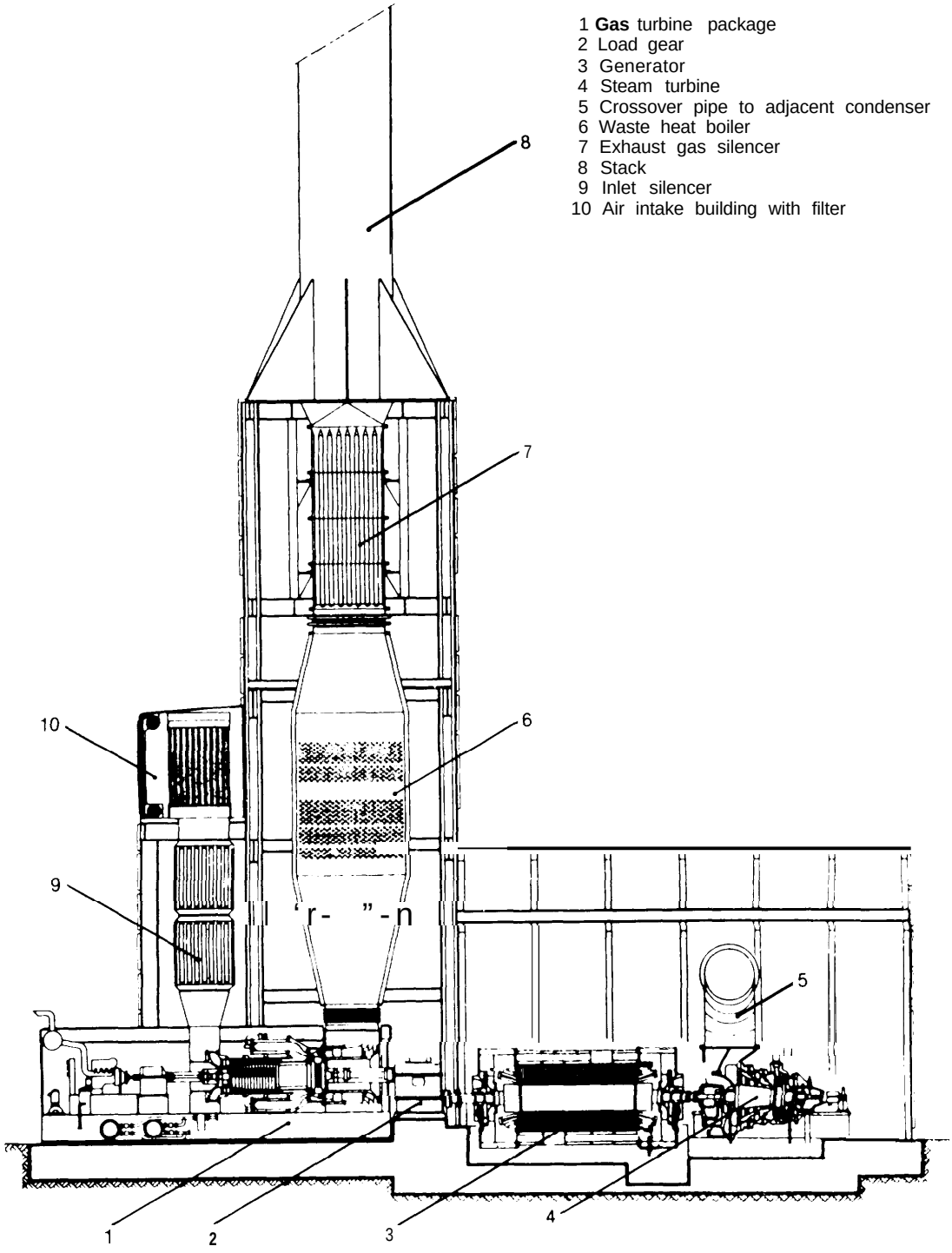

SOURCE Electrical Research Association Limited, *Electric Power Plant International*, 1975-1976 edition, Surrey, England, 1975 (With acknowledgements to A E G Kanis)

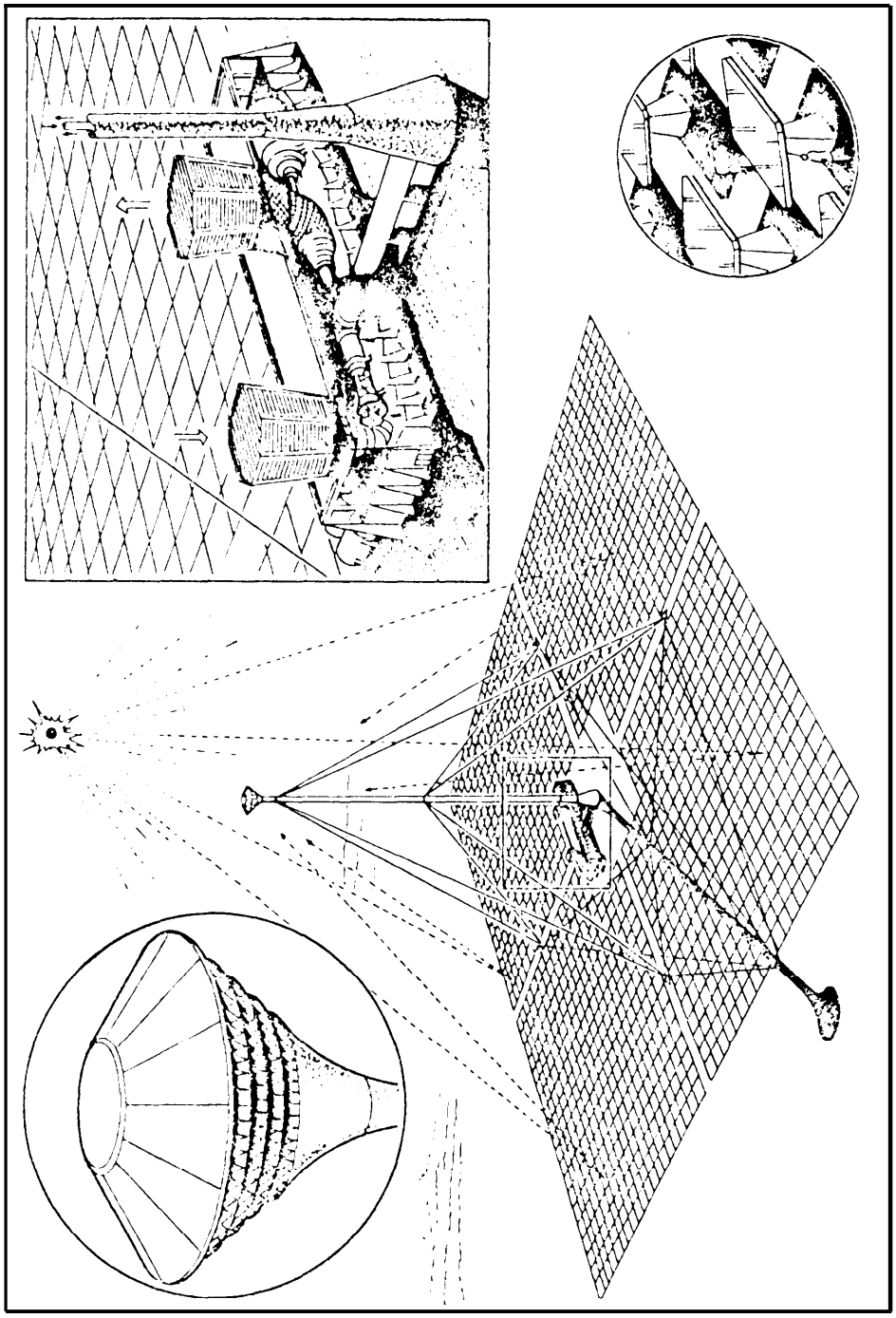

Figure IX-23.—Artist's Rendering of Proposed Solar-Heated Air Turbine Generating Facility

SOURCE: Philip O. Jarvinen, "Solar Heated Air Turbine Generating System."

Figure IX-24.—Temperature Dependence of Optimum Cycle Efficiencies

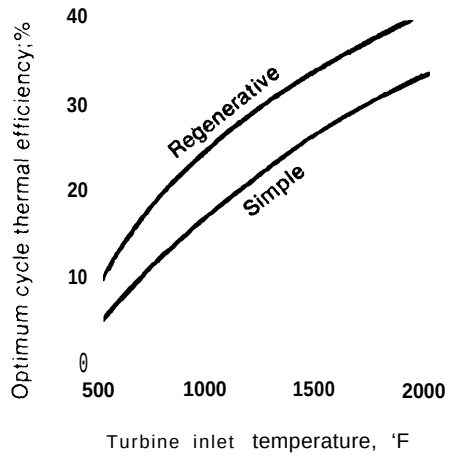

SOURCE. Beno Sternlicht, "The Equipment Stale of LowLevel Heat Recovery," *Power,* June 1975, page 73

of simple-cycle devices decreases dramatically in small sizes. The 2.7 MW **"Centaur"** gas turbine manufactured by International Harvester, for example, can achieve 26.6-percent efficiency, while the small **20** k W Gemini unit achieves only 13.7 percent efficiency. The inefficiency of smaller engines is decreased somewhat if regenerators are used. A small turbine developed for **automobile applications, for example, can develop 26.8-percent efficiency and, as noted earlier, the small inverted-cycle turbine developed by the Carrett Corporation has** shown 38-percent efficiencies in preliminary tests. All of these efficiencies are, however, substantially less than the 47-percent efficiency which apparently can be" achieved by the 50 MWe closed-cycle device.

The generating efficiency of a gas turbine is reduced if waste heat is recovered in a

Table IX-7.—Brayton Cycle Efficiencies

Cycle	Nominal Size (kW)	Cycle Efficiency' Present (1976)	Future 1980-85	Reference
Simple cycle	20	**13.7**		(1)
	100	**13.7**	**22-28**	**(1) (2)**
	800	**22.8**		**(1)**
	2700	**26.6**		**(1)**
	7200		31.5	**(1)**
Regenerated cycle	**20**	**26.8**	38	**(5)**
	100		32-35	**(2)**
	central station	35		**(3)**
	2800	32.2		**(8)**
Closed cycle (Regenerated)		25-32		**(4)**
		35-39		**(9)**
Combined cycle (Simple cycle)	4200		36.8	**(8)**
	4550		40.2	**(8)**
	57400		44.4	**(8)**
Combined cycle **(Regenerated gas turbine)**	3606		**40.7**	**(8)**
	3860		**43.6**	**(8)**
	73700		**48.0**	**(8)**
	235000		**47.0**	**(lo)**

*Losses in the mechanical equipment Will reduce the cycle efficlency by 3-8%

sOURCE
(1) *International Harvester* Solar Division estimates based on cost and performance of the 30 hp Gemini, 150 hp Titan, 1146 hp Saturn, and 3860 hp *Centaur turbines.*
(2) JPL "An automobile power systems evaluation," pp. 5-6.
(3) Beno Sternlicht "The equipment side at low-level heat recover," *Power, June* 1975, p. 71.
(4) G. Samuels and J. T. Meador, MIUS Technology Evaluation: Prime Movers, ORNL-HUD-MIUS-11, April 1974, p. 29.
(5) Patrick Stone (Garrett Corp), private communication, December 1976.
(6) John R. Gintz (program manager, Boeing Engineering and Construction Division of the Boeing Company), "Closed Cycle High Temperature Central Receiver Concept for Solar Electric Power."
(7) R. M. E. Diamant (editor), *Total Energy*, Pergamon Press, p. 225.
(8) Dean T. Morgan and Jerry P. Davis (Thermo-Electron Corporation), "High Efficiency Decentralized Electric Power Generation Utilizing Diesel Engines Coupled with Organic Working Fluid Rankine-Cycle Engines Operating as Diesel Reject Heat," November 1974, pp. 4-12.
(9) Based on analysis made by GE for the ECMS study.
(lo) Stal-Laval GASTEAM Technical Information, March 1975, p. 6.

boiler placed at the turbine outlet. Overall performance of the simple-cycle gas turbines producing both thermal and electric energy is shown in figure IX-25. It can be seen that, in contrast with the Rankine cycle, the efficiency changes very slightly as a function of the temperature of the waste heat recovered.

The regenerative cycles apparently exhibit a combined electrical and thermal efficiency similar to that of the simple-cycle efficiencies shown in figure **IX-25,** but the ratio between electric and thermal output increases as a result of the regeneration.

The performance of a closed-cycle Brayton-cycle system, which provides thermal energy to a district heating system requiring pressurized water at temperatures between 2000 and 3000 F and returns the water at 1220 F, is illustrated in figure IX-26. In this case, it can be seen that the combined efficiency can exceed 80 percent.

in a solar application where alternating current is required, all of the efficiencies

Figure IX-25.—The Effect of Waste-Heat Extraction on the Performance of Gas Turbines

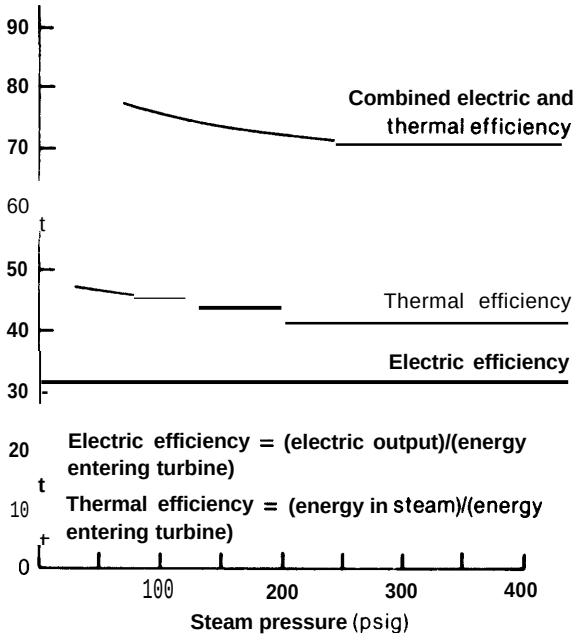

SOURCE Calculations based on performance of Rolls Royce RB.211 Gas Turbine (28,960 BHP), 2% electric efficiency loss due to backpressure

Figure IX-26.—Closed Regenerated-Cycle Gas Turbine

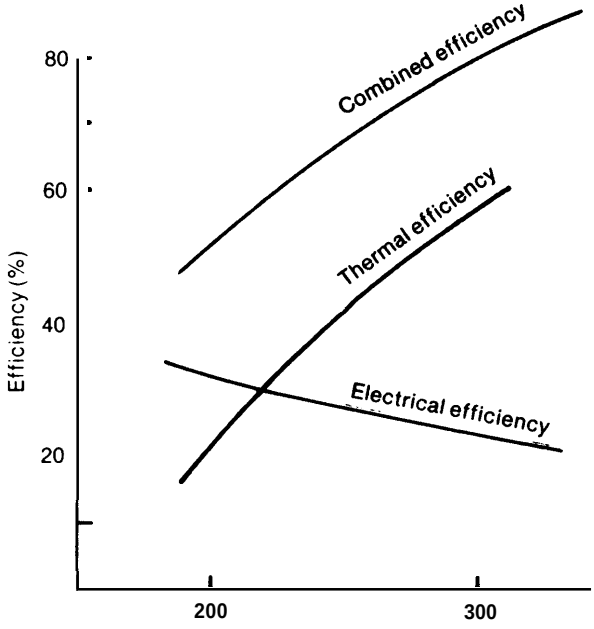

SOURCE. Diamant, et al , op cit , page 244

discussed above must be reduced by the efficiency of some type of power-conditioning equipment. This is because the speed of Brayton-cycle devices changes rapidly as a function of the incident power; thus, frequency control cannot be maintained in an alternator, although the Brayton-cycle device can be locked into a utility grid frequency if it is attached to utility power. In such cases, electric output power will be proportional to the energy available from the solar collector.

This frequency control problem can be solved for a stand-alone system by rectifying the output of the alternator and then using an inverter to produce a constant 60-cycle output. The efficiency of this process will be typically in the range of 85 to 90 percent. Constant-speed mechanical devices are also available which can produce a constant speed in an output shaft, given variable speed inputs. It is, for example, possible to operate a drive-flywheel combination and controller in reverse. There have also been

ingenious proposals for providing frequency stability by continuously changing the number of fixed magnets **in the alternator. All of these** schemes result in some loss of efficiency.

Operation With **Fossil Backup**

It should be possible to design a Brayton cycle system **which is capable of operating from either fossil or solar energy** sources. In a closed cycle, all that would be required would be to insert an additional heat-exchanger and fossil burner into the piping circuit. In an open-cycle turbine, a fuel injector could be included in the circuit for use when backup was needed. There might be some difficulty in operating a fossil-burning device which was attached to the focus of a tracking collector because the exhaust might accelerate the aging of optical components; however, this problem should not be insurmountable.

System Costs

The installed costs of gas turbines of various sizes are illustrated in figure IX-27. There is a clear economy of scale in these devices, given current manufacturing techniques, although the effect is not as pronounced as it was in the case of Rankine-cycle engines. The enormous advantage of using mass-production techniques for the production of small equipment is also apparent from this figure.

The total cost of an installed Brayton device must include the cost of several components in addition to the turbine. Waste heat boilers (if used) would add $15 to $75 per kilowatt to the costs shown in figure IX-27 (depending on the temperature and pressure of the process steam required). [24] Miscellaneous equipment for controls and

[24] Sternlicht, op. cit

Figure IX-27.— Installed Costs of Open-Cycle Brayton Turbines

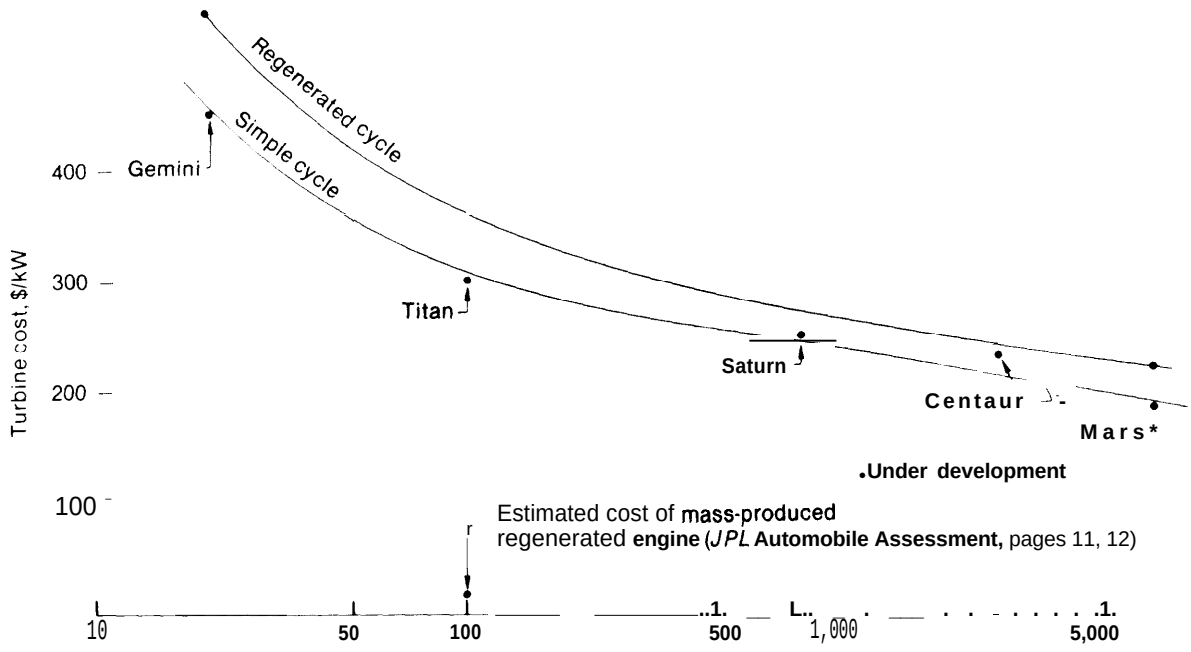

SOURCE Prices based on estimates made by International Harvester for units shown Regenerator Prices are assumed to be 20°. of the turbine price (see Stern licht, op cit p 72)

other equipment will add about 20 percent to the cost.[25] The cost of the equipment required to maintain a constant output frequency will vary with the size of the installation. The cost of power-conditioning equipment is discussed in detail in the section on electric storage. If a backup fossil capability is required for the equipment, fuel storage would add approximately $30 per kilowatt.[26]

THE STIRLING AND ERICSSON CYCLES

Even if devices employing Rankine or Brayton cycles were constructed from perfect components (i.e., if there were no friction or fluid losses around turbine blades), these devices would not achieve the efficiencies of ideal heat engines operating between the same temperature limits. This is because neither cycle accepts heat only at the highest cycle temperature nor rejects heat only at the lowest temperature; an ideal engine would maintain a constant temperature during these heat-exchange processes.

Both the Stirling and the Ericsson cycles maintain a constant temperature during the heat-exchange processes associated with expansion and compression and thus are, in principle at least, capable of achieving the maximum permitted Carnot efficiency. Existing engines which approximate Stirling and Ericsson cycles are externally fired, piston engines. (No real device actually maintains a constant temperature during heat addition or heat rejection and thus the devices fail to operate on a true Stirling or Ericsson cycle.) In addition to the potential for high efficiency, they should also be capable of long lifetimes, and quiet, reliable operation.

Also, since heat is applied externally, the engines are easily compatible with solar energy applications, and backup energy can be provided from any type of fuel. In total energy applications, they have the additional advantage of rejecting nearly all of their waste heat in the form of heated liquids, and thus a heat-recovery boiler is not required. The cycles are capable of operating at a variety of different temperatures, with the upper-temperature range limited only by the capabilities of the heat-exchange materials. They also have an inherently low RPM and thus need not use expensive gear-reduction systems. Devices based on the Ericsson cycle also can be designed to operate at relatively low inlet temperatures and can span the entire spectrum of temperatures available from solar collectors. The systems are particularly interesting for onsite-power applications since efficiency is not sacrificed by building units as small as a few kilowatts.

There have been proposals for using Stirling engines for vehicle propulsion, electric-power generation (including residential, total-energy systems), artificial hearts, and water-pumping applications.[27] [28] [29] [30] [31] [32] **A major study conducted recently by the jet Propulsion Laboratory concluded that the Stirling engine was one of the two most promising systems for future automobile engines because of its potential for high efficiency**, low emissions, and quiet operation. 33

Principles of Operation

The operation of ideal Stirling- and Ericsson-cycle devices is explained in some detail in figure IX-28. Both cycles described here

[25] Estimate made for OTA by the Ralph Parsons Company,

[26] Sukuja, et al., Op. cit., pp. 3-26

[27] W. R. Martini, *Developments in Stirling Engines,* presented to the American Society of Mechanical Engineers, New York, N. Y., Nov. 26-30, 1972

[28] *Stirling Total Energy System* (a Philips Corporation paper).

[29] W. R. Martini, *Unconventional Stirling Engines for the Artificial Heart Application, Proceedings,* 9th Intersociety Energy Conversion Engineering Conference, San Francisco, Calif., Aug 26-30,1974.

[30] G. M Benson, "Thermal Oscillators, " *Proceedings,* Eighth Intersociety Energy Conversion Engineering Conference, Philadelphia, Pa., August 1973.

[31] *3-5k W Stirling Engine Alternator,* ERG, Inc., report to U.S Army, MERDC (1969).

[32] *Stirling Engine Driven Total Energy System,* ERG, Inc., report to Am Gas Association (1969).

[33] *An Automobile Power Systems Evaluation,* jet Propulsion Laboratory.

Figure IX-28.—Ideal Stirling and Ericsson Cycles

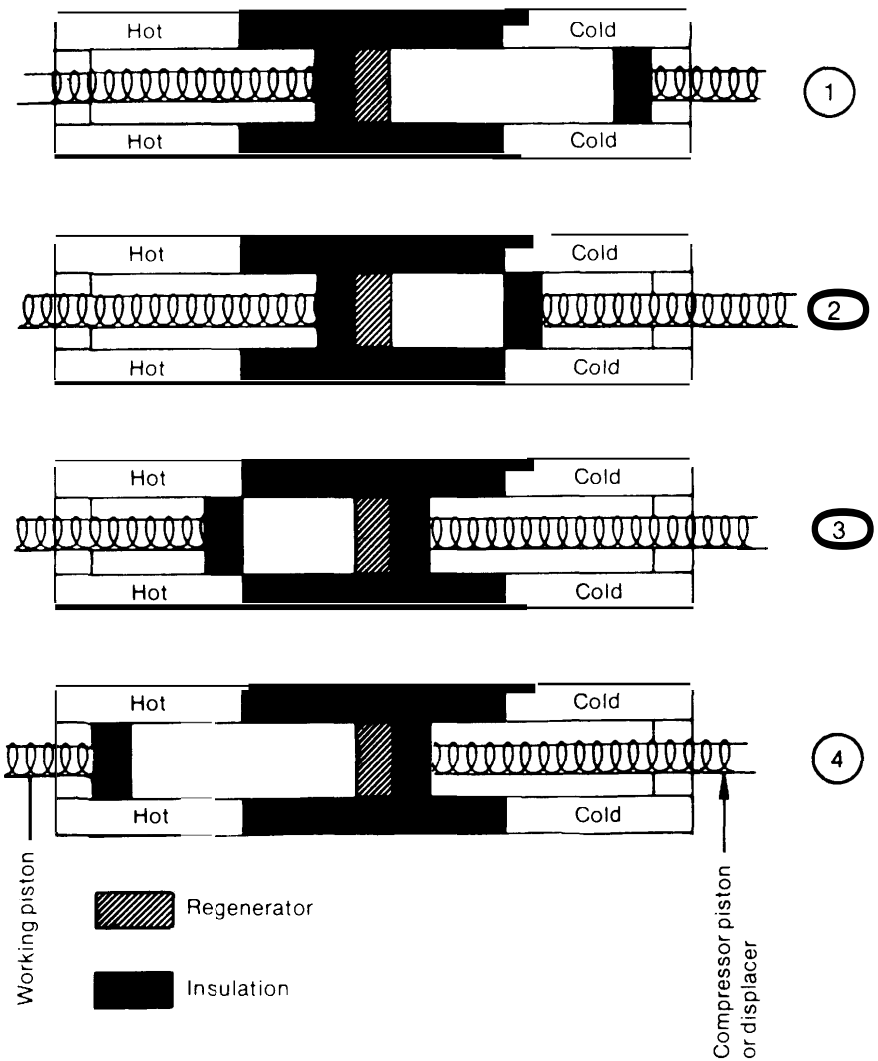

SOURCE: Prepared by OTA using manufacturer's data.

STAGES OF THE IDEAL STIRLING AND ERICSSON CYCLES

MOVING FROM STAGE 1 TO STAGE 2
- — compression at constant low temperature raises the pressure
- — energy is rejected into the cold heat exchange surfaces
- — work is done on the system through the compressor piston

MOVING FROM STAGE 2 TO STAGE 3
- — working fluid is forced through the regenerator and is heated as it absorbs heat from the regenerator
- — no work is done on the system and no heat enters or leaves the working fluid except through the regenerator
- — the process takes place at constant volume with increasing pressure in the Stirling cycle (as shown in the figure) and at constant pressure with increasing volume in the Ericsson cycle

MOVING FROM STAGE 3 TO STAGE 4
- — the working fluid is allowed to expand at a constant temperature and the pressure decreases
- — energy is absorbed from the hot heat exchange surfaces
- — work is performed on the working piston

MOVING FROM STAGE 4 TO STAGE 1
- — working fluid is forced back through the regenerator and is cooled as it gives up heat to the regenerator
- — no work is done on the system and no heat enters or leaves the working fluid except through the regenerator
- — the process takes place in constant volume with decreasing pressure in the Stirling cycle (as shown in the figure) and at constant pressure with decreasing volume in the Ericsson cycle

In actual engines, these stages will not be distinct.

would be capable of ideal efficiency. Both cycles absorb and reject heat at a constant temperature and employ a permeable thermal mass, called a regenerator, to heat and cool the working fluid without exchanging energy with systems external to the engine.

This regenerator is the key to the system's efficiency. In principle, it cools heated working fluids passing through it, absorbing energy from the fluid in the process, and restores all of this energy to the fluid when cool fluid passes through it in the opposite direction. The only difference between the two cycles is that in the Stirling cycle the regenerative heating and cooling of the working fluid occurs in a constant volume while the Ericsson cycle performs this function at a constant pressure.

It was noted earlier that the efficiency of Brayton-cycle devices could be improved with regenerators and by heating and cooling the gas during expansion and compression. It can be seen that the Ericsson cycle represents the ideal limit of the Brayton cycle.

In actual cycles, of course, performance is limited by failure to follow the ideal cycle, by "heat leaks" between the hot and cold ends of the cylinder, by pressure losses through heat exchangers and regenerators, by miscellaneous mechanical losses, and by imperfect heat exchange and regeneration processes. Major development problems include the design of high-temperature heat exchangers and regenerators which are easy to manufacture and have displayed acceptable lifetimes.

A problem unique to the Stirling and Ericsson cycles is the requirement for systems capable of ensuring that the working-fluid temperature remains constant during the heat absorption and rejection processes. A variety of schemes for accomplishing this function have been proposed. One technique involves constructing pistons with a series of fins which slide between mating fins attached to cylinder ends maintained at constant temperatures. These fins ensure a large heat-exchange surface between the constant-temperature source and sink and the working fluid, even though the fluid volume is changing.

Another design decision is the choice of a working gas. The cycles operate most efficiently with a gas with high thermal conductivity, low density, low viscosity, and a large change in volume when heated.[34] **It** can be seen from figure IX-29 that hydrogen achieves the best theoretical performance. It was selected by Philips and Ford Motor Company for their prototype automobile engine.

Hydrogen is highly flammable and could create a fire hazard if it escapes, although the quantities used in small engines are extremely small. It may also be incompatible with certain heater designs and some types of heat pipes. (Heat pipes may be needed to transfer thermal energy from a separate heater.) A recent study by Philips and Ford concluded that helium is a "requirement when operating with the heat pipe since hydrogen permeates the joints and 'poisons' the heat pipe."[35] Theoretical work has also been done on a variety of other working fluids, including dissociating fluids and boiling and condensing fluids.

Design Alternatives

Prototype designs capable of approaching the ideal cycles are illustrated in figures IX-30 and IX-31. The rhombic-drive device, shown in figure **IX-30, has** been used by the Philips Corporation since the 1930's. It uses a pair of pistons in the same cylinder and an ingenious mechanical linkage to maintain the proper phase between them. The newer Philips design is shown in figure **IX-31. This system uses the working piston in** one cylinder as the displacer for the adjacent cylinder, with four cylinders forming a closed

---

"W. R. Martini, *Developments in Stirling Engines,* **presented to the Annual Winter Meeting of the American Society of Mechanical Engineers, New York, N. Y., Nov. 26-30,1972,** p.1

[35]R. J. Pens and R. D. Fox, A Solar/Stirling Total Energy *System,* **published by Aeronutronic Ford Corporation.**

Figure IX-29.—Calculated Performance of a 225-hp Stirling Engine as a Function of the Specific Power and Working Gas

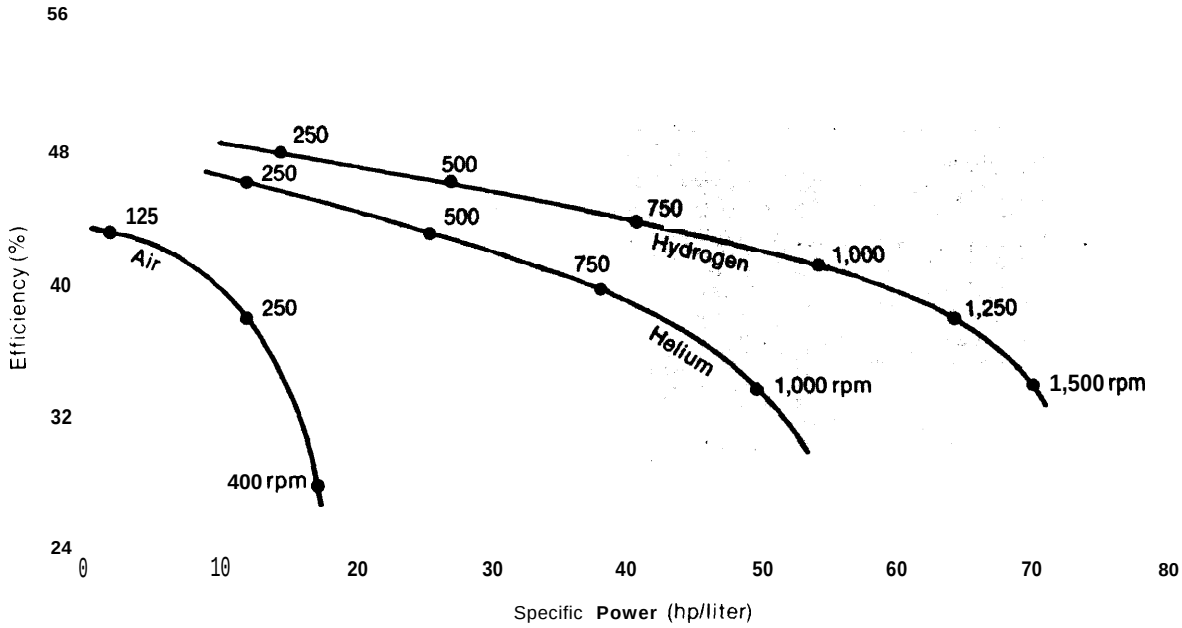

SOURCE Samuels et al op cit, page 54

loop. The phase is maintained with a "swashplate" as shown in the figure.

A major problem for both of these devices is the seal which must be made between the working fluid (usually helium or hydrogen), and the reciprocating shaft emerging from the engine. The Philips design employs a flexible membrane called a "roll-sock seal" for this function, which links the piston shaft to the cylinder wall with a flexible membrane (see figure IX-30).

The United Stirling Company of Sweden uses a Sliding seal in most of their designs. progress is being made, but these seals apparently still remain the major limit on engine life and reliability. The seals could present difficulties for total **energy applications** where they must be maintained at the temperature of the hot water used for space-conditioning; the life of the seals decreases sharply at high temperatures.

The problem of these seals could probably be overcome for continuous power applications if the seals were separately cooled or if the engine were designed to be sealed hermetically with an alternator. Such systems, however, have not yet been designed. It can be seen from figure IX-32, that if the energy available to **these mechanical drive systems changes, the engine** speed will change. A constant a.c. output from the system can be achieved in one of two ways: 1) the engine speed can be permitted **to** change and the variable frequency output rectified and inverted (as was necessary in the case of the Brayton-cycle devices), or 2) frequency control can be achieved by **varying** the pressure of the system using techniques developed for controlling Stirling-cycle automobile engines.

Some of the difficulties encountered by the mechanical drive systems could be overcome if the free-piston systems shown in

Figure IX-30.— Philips Rhombic-Drive Stirling Engine

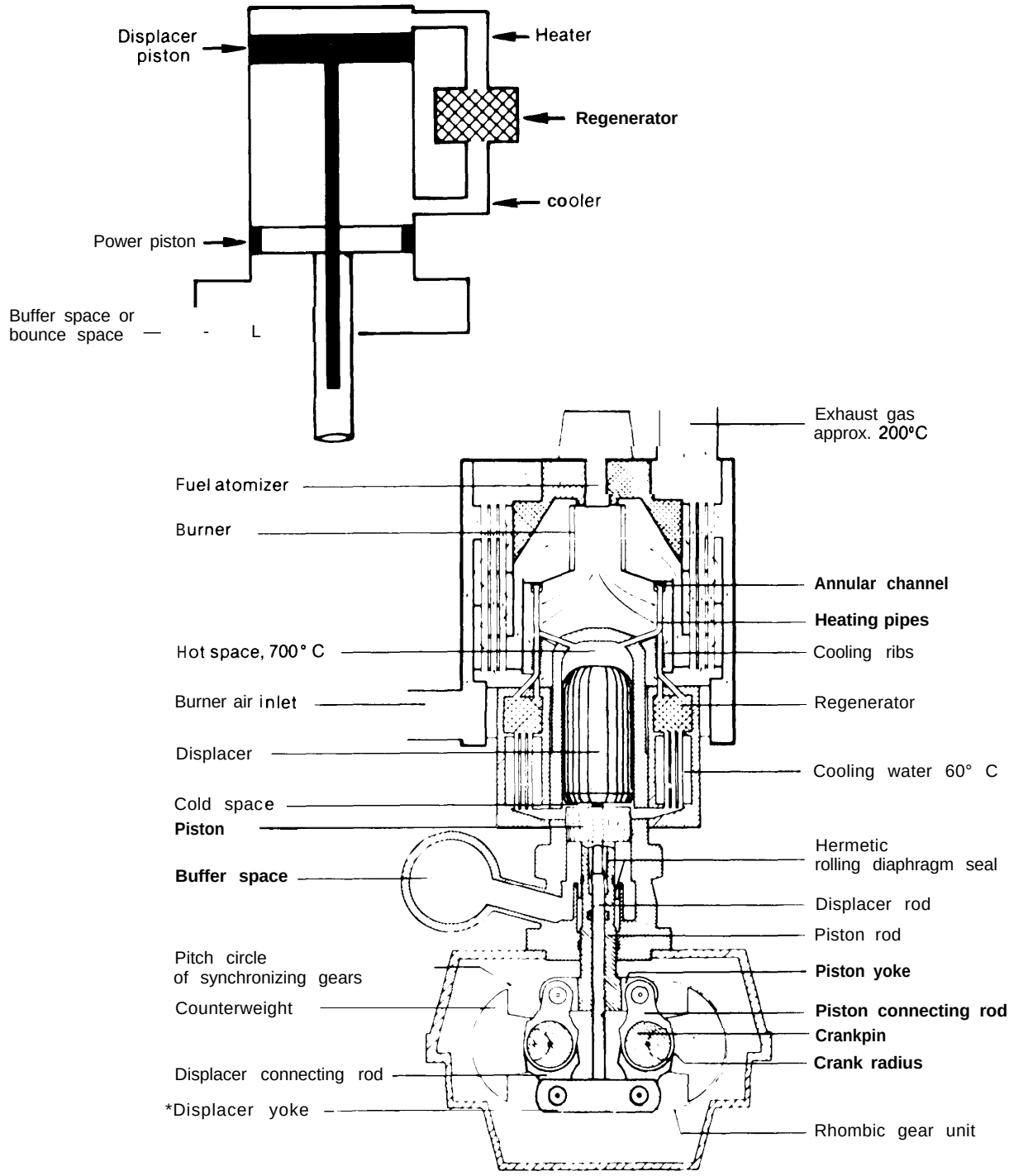

SOURCE: "Towards Cleaner Air: A Passenger Coach Powered by a Philips Stirling Engine," N. V. Philips, Netherlands, January 1971.

Figure IX-31 .—Swashplate Stirling Engine

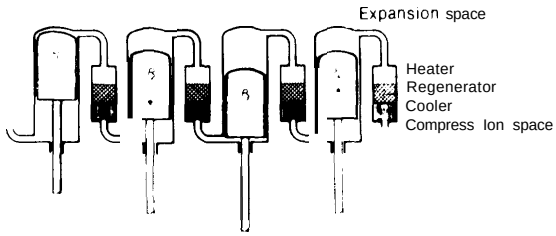

Diagram of the double-acting type Stirling engine principle of the double. acting engine There is a hot space—expansion space—at the top and a cold one—compression space—at the bottom of each of the cour cylinders shown The hot space of a cylinder is connected to the cold through a heater, a regenerator, and a cooler The pistons Pn of the cylinders move with a suitable phase shift between them In the case of four cylinders, as shown here, this shift is 90°

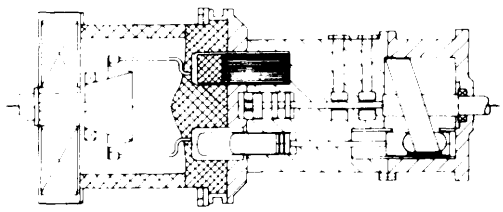

Schematic diagram of a four cylinder, double acting type Stirling engine with swash plate drive One of the four cylinders and one of the four cooler regenerator units *are* shown in cross-section In these engines, the movement of the pistons is transmitted to the main shaft by a swashplate

SOURCE Pictures and captions taken from R J Meijer and C L Spigl, "The Potential of the Philips Stirling Engine for Pollution Reduction and Energy Conservation " presented at the Second Symposium on Low Pollution Power Systems Development, Dusseldorf, Germany, November 48, 1974

figure IX-33 are successfully **developed.**[36 37 38] These systems are thermal/mechanical oscillators **in which the working piston and the displacer piston simply bounce** in the working fluid at a frequency determined by the properties of the gas and the mass of the pistons.

The designers of the ERG "thermal oscillator" system claim to have developed a free-piston system in which the frequency of oscillation is independent of the load applied as long as the average working pres-

[36] W Beale, et al , Free *Piston Stirling Engines, Some Model Tests and Simulations,* SAE Paper 690230, January 1969

[37] W Beale, et al , *Free Piston Engines, A Progress Report,* **SAE** Paper 730647, June 1969.

[38] G. *M.* Benson, *Thermal Oscillators, Proceedings,* Eighth IECES Conference, Aug 14, 1973, Philadelphia, Pa

Figure IX-32.— Calculated Performance of a Philips Rhombic-Drive Stirling Engine

General Design Data

Item	*Value*
Shaft power	*22.4* kW
Effective efficiency	40%
Engine shaft speed	**2000** rpm
Working fluid	helium
Mean pressure	200 atm
Max. cycle pressure	276 atm
Min. cycle pressure	141 atm
Expansion gas temperature	9650 K
Compression gas temperature	335 'K
Number of cylinders	4
Piston swept volume	55 cm^3
Piston phase	**900**
Pressure phase	**630**
Piston diameter	**4.4** cm
Piston stroke	3.5 cm
piston rod diameter	1.7 cm
Water temperature in	303 'K
Water flow	**0.9** l/s
Heat pipe temperature	1,070° K
Engine length	75 cm
Engine diameter	45 cm
Engine weight	100 kg

System Efficiency at Various Power Levels and Speeds

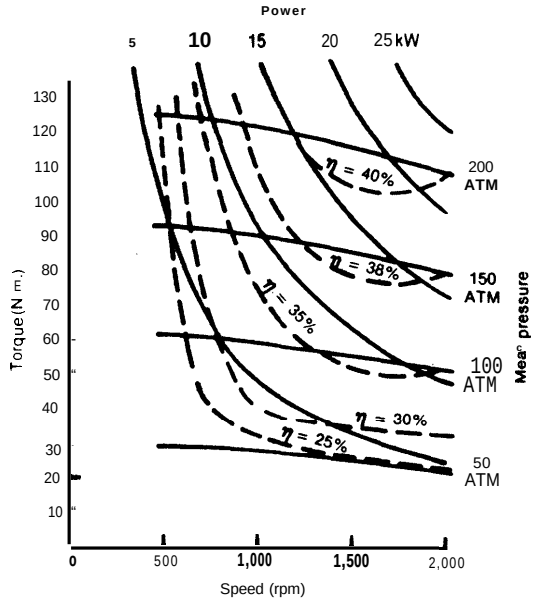

SOURCE H A Jaspers and F K du Pre, "Stirling Engine Design Studies of an Underwater and **a Total** Energy System," North American Philips Corporation publication #739035, 1973 *IECEC Record,* pp 588.593

Figure IX-33.– Free-Piston Stirling and Ericsson Cycle Designs

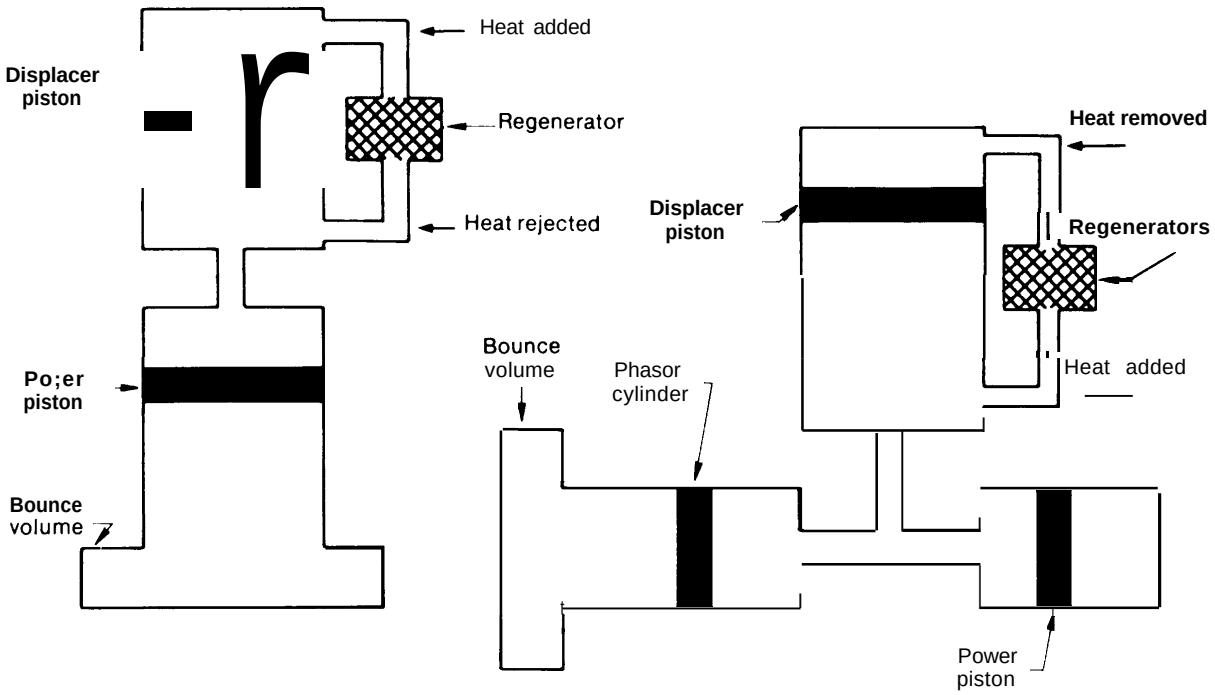

SOURCE: Diagrams of free-piston devices shown above based on similar diagrams in G M Benson, "Thermal Oscillators," presented to 8th IECEC meeting, August 14, 1973, Philadelphia, Pa.

sure is maintained in a sealed unit. The energy applied to the load is automatically adjusted as the pistons change stroke and relative phase angle.[39] **The use of the free-piston designs avoids the problem of mechanical linkages (having** only two or three moving parts), the need for starters (the machines start themselves when heat is applied), and the problem **of sealing a reciprocating shaft. As a result, it may be possible to** develop a system which is inexpensive to manufacture and has a long life and low annual maintenance. With pressures on the order of 1,000 to 2,000 psi, and the use of gas bearings where the working fluid provides the necessary lubrication, efficiencies as high as 70 to 80 percent of ideal should be obtainable. (Some designers contend that 90 percent of ideal efficiencies may be achieved, but this clearly will be extremely difficult.)

One unique problem with the free-piston design is that no rotating shaft emerges from the system. The power is in the form of linear oscillations of the working piston. The piston may not move very far; a *1* kW unit can move as little as 1 inch. '" "Linear alternators" suitable for this application have been successfully constructed, however, and exhibited efficiencies comparable with conventional alternator designs. " 4243

[39] G. M **Benson,** op. **cit., p. 10**

[40] G. **M. Benson,** op. **cit., p. 1.**

41 Ibid,

[42] **William** Beale **(Sunpower, Inc.), private communication, July 1976,**

"William Beale, *A 100-Watt Stirling* **Electric** *Generator for Solar* **or** *Solid Fuel* **Heat Sources, I ECEC 75,** Record, p. 1,020.

Power is produced either by moving a conductor (in a design similar to a loudspeaker voice coil) or by moving a magnet or flux gate. One design approach is **shown** in figure **IX-34.**

While these devices have great promise, relatively little work has been done on their design **in comparison with** the more conventional designs. Their performance in operational configurations has not been extensively tested, and disagreements about their practical achievable efficiencies and their stability to varying loads and input conditions cannot be resolved until more work is done. Working devices have been built, however, and high efficiencies measured in the laboratory. " 45

The development of a heat-transfer surface which can transport energy at high rates into a small cylinder head has proved to be a difficult undertaking. The materials required for this purpose must withstand high pressure, as well as exposure to oxidizing hot gases on one side of the heat-exchange surface and hydrogen on the other side. Devices capable of accomplishing this function can be made, but they must use alloys which are relatively expensive **in comparison with the mild steel used in** conventional engines— and in many cases, the designs appear to be difficult to manufacture. Heat pipes may be able to solve some of the problems faced in this area by pro**viding rapid heat transfer** in a system which does not produce a large pressure drop in the working fluid.[46] **The development of ceramic heat-exchange materials would be a great asset to the technology,** since ceramic devices would be able to operate at very high temperatures (i. e., 2,0000 F) and it may be possible to manufacture them with low-cost, mass-production techniques. The high **operating temperature permitted would also increase the potential efficiency of the system.** DOE is **sponsoring research** to develop a ceramic heat exchanger for Stirling applications beginning in FY 1978.[47]

An interesting sidelight to the Stirling- and Ericsson-cycle devices just described is their ability to integrate engines and heat pumps into a single device. Two approaches to this design, using the free-piston concept, are **shown in figures IX-35 and IX-36. This design can** be **modified to include electric generation by using the "phaser" pistons as linear alternators, thereby making** the device an attractive total energy system. The system is also attractive in that the performance of the heat pump does not drop rapidly as outdoor temperatures decrease (as is the case with conventional electric heat pumps). 'n 49

An Ericsson-cycle heat pump would probably have a higher efficiency than commercial heat pumps, but the impact of the new cycle on overall system performance would not be dramatic since most of the losses in current heat-pump systems result from the need to heat (or cool) the refrigerants to temperatures far above (or below) room temperature so that the room air-flow will be kept to comfortable levels. Heat exchangers and the requirements of fans are the second greatest source of inefficiency. 50 These effects reduce the performance of contemporary heat pumps by more than a factor of five. The efficiency of the compressors used in contemporary heat pumps is typically 75 percent of the ideal Carnot ef - ficiency.

It **is also** possible to operate a Stirling engine as a standard total-energy system, as

---

[44] G M Benson, op cit , p 14

[45] Beale, private communication, July 1976

[46] S G Carlquist, et al , "Stirling Engines Their Potential Use in Commercial **Vehicles and Their Impact on Fuel** Utilization," *Instn Mech Engrs, 1975,* **p 35**

"W A Tomazic **and James E** Cairelli, **Ceramic Ap** *plications* **In the Advanced** *Stirling Automotive Engine* **(ERDA/NASA 1011/77/2, p 6)**

[48] Paul **R.** *Swenson,* **Consolidated Natural Gas** Service Company, Cleveland, Ohio, "Competition Coming in Heat Pumps: Gas-Fired May be Best in Cold Climate, " **Energy Research Reports,** 3(5), *Mar 7, 1977,* p 2

[49] " Advanced Gas-Fired Heat Pumps Seen Cutting Heating Bills **in Half, "** *Energy Users Report 188 (3/7/77),* p **27, Bureau of National Affairs**

[50] W. **A. Spofford, "Heat-Pump Performance for Package** Air **Source Units,"** *ASHRAE Journal,* April 1959,

Figure IX-34.— Sunpower Systems Free-Piston Stirling and Ericsson Cycle Design Approach

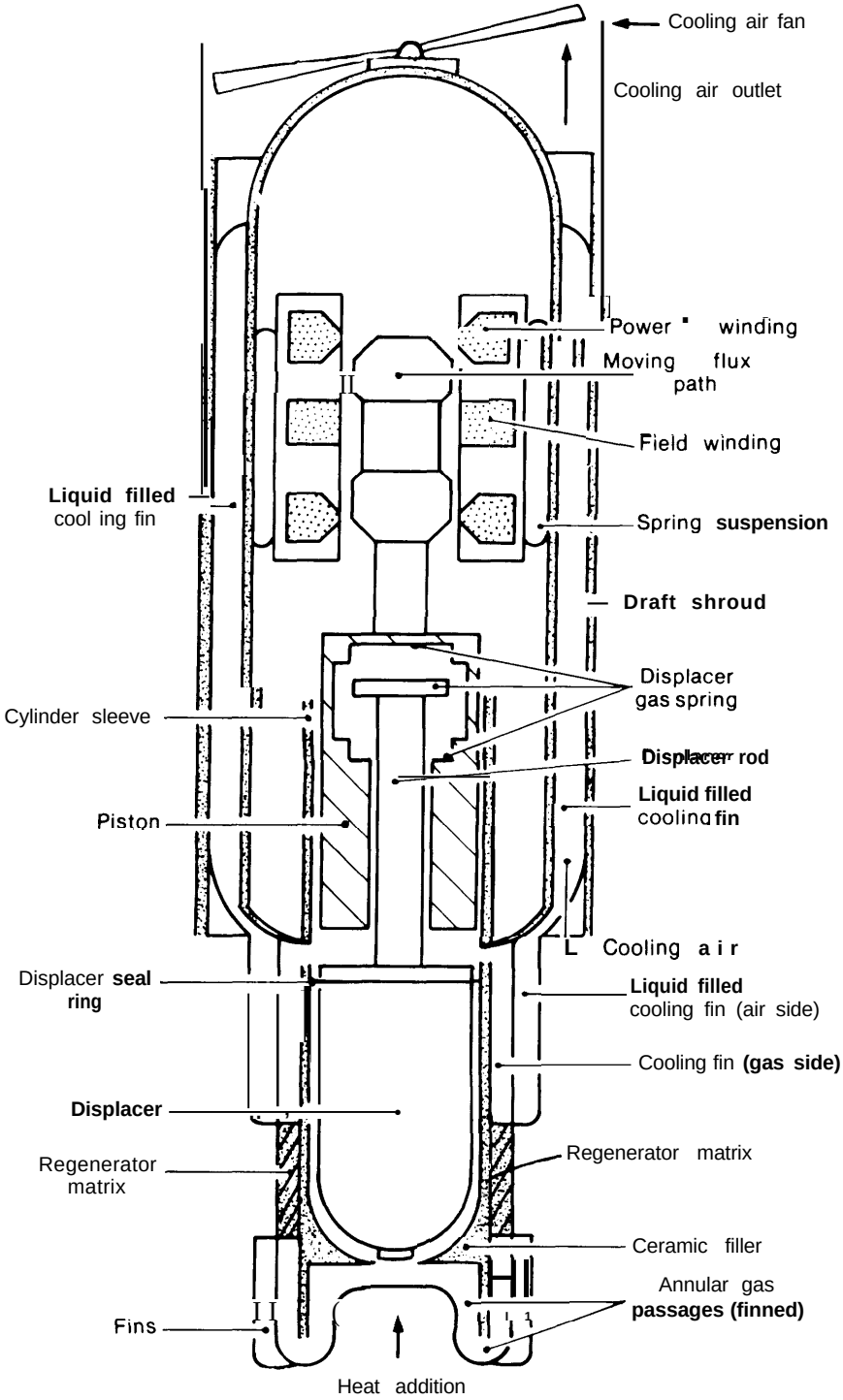

SOURCE: W T. Beale and C. F. Rankine (Sunpower, Inc.), "A 100 Watt Stirling Electric Generator for Solar or Solid Fuel Heat Sources," IOth IECEC, August 1975, *Proceedings,* p. 1020.

Figure IX-35. — Free-Piston Total Energy System

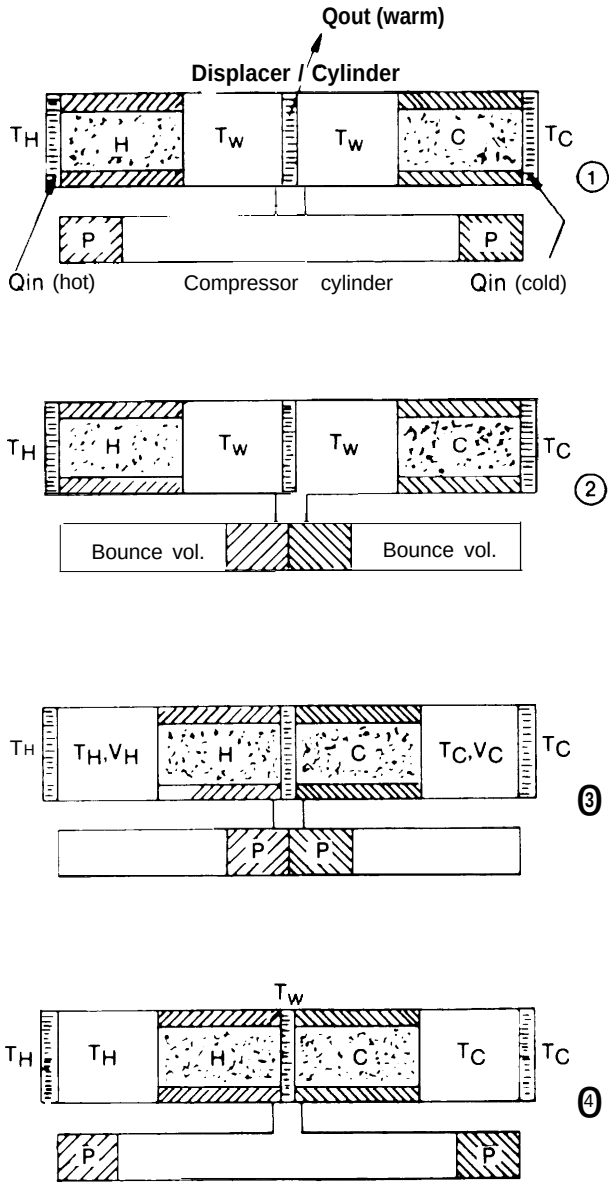

Note: Only **phasor position determines working and bounce gas pressures (P_w + pb)** since **op**posed motion of hot and cold displacers (H + C) produces a constant P_w.

SOURCE. G M Benson (ERG), Thermal Oscillators, op cit (U.S. patent No. *3,928,974).*

Figure IX-36.— Free-Piston Total Energy System

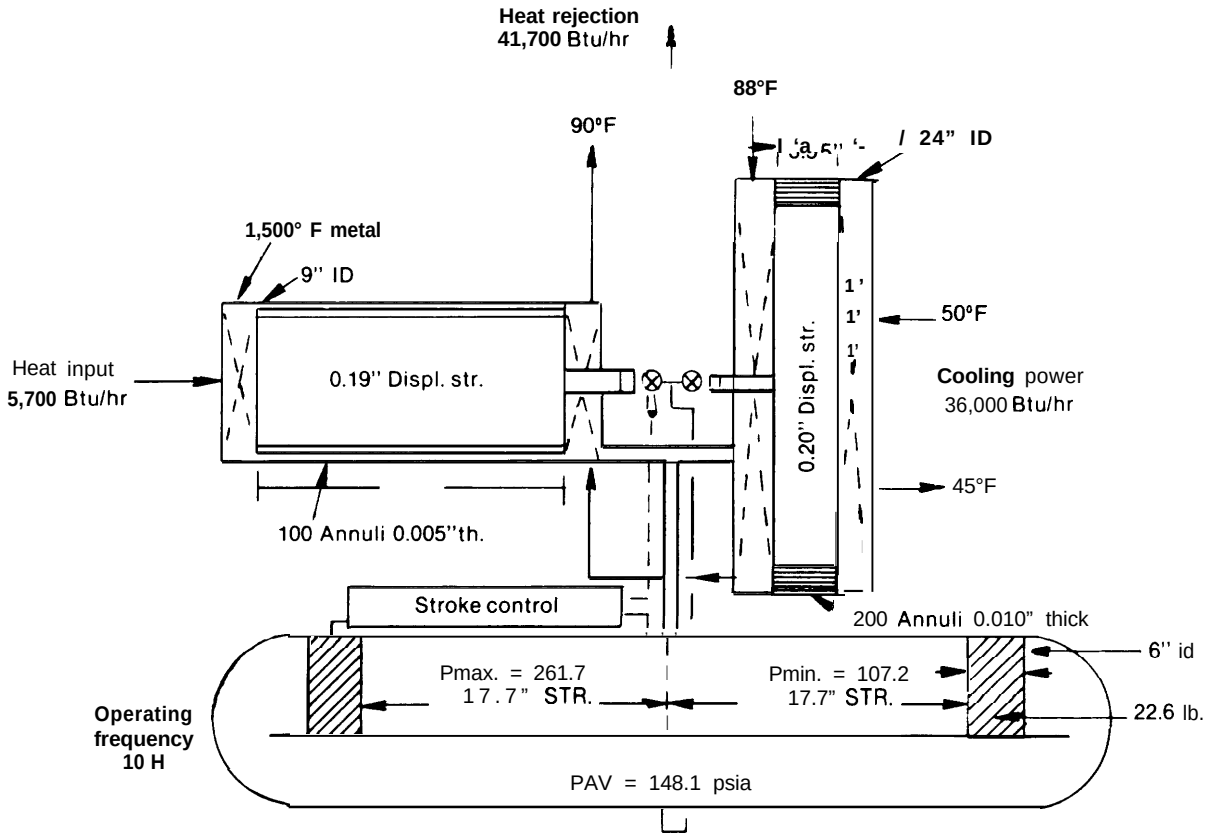

Optimized preliminary design for **a heat-operated heat pump**

SOURCE W R Martini(University of Washington, Richland), "The Free-Displacer-Free-Piston Stirling Engine—Potential Energy Conserver," 1975 *IECEC Record,* pp 9951,002, 1976.

shown in figure **IX-37. Space heat is provided from engine waste heat. Another approach, currently being supported by the American Gas Association, uses the piston of an Ericsson-cycle device to drive a sealed freon compressor.[51] William Beale of Sunpower, inc., has proposed still another alternative which is being investigated by the American Gas Association. His design would use the working piston in a free-piston device as the compressor** for a Rankine-cycle heat pump. The working piston contains a mass whose inertia changes the volume available to the refrigerant inside the working piston as the piston oscillates.[52] The refrigerant enters and leaves this compression volume through flexible metal tubes which provide a leak-free path for the refrigerant through the helium-filled spaces surrounding the piston.

Performance

The performance of a number of the devices surveyed by the Jet Propulsion Laboratory in its review of potential automobile engines is summarized in table IX-8. **All of**

[51]Dr. C. H. Benson, ERG, **private communication, Feb. 2,1977.**

[52]William Beale, **President of** Sunpower, Inc., **private communication.**

Figure IX-37.—The Philips Design for a Stirling Engine Total Energy System

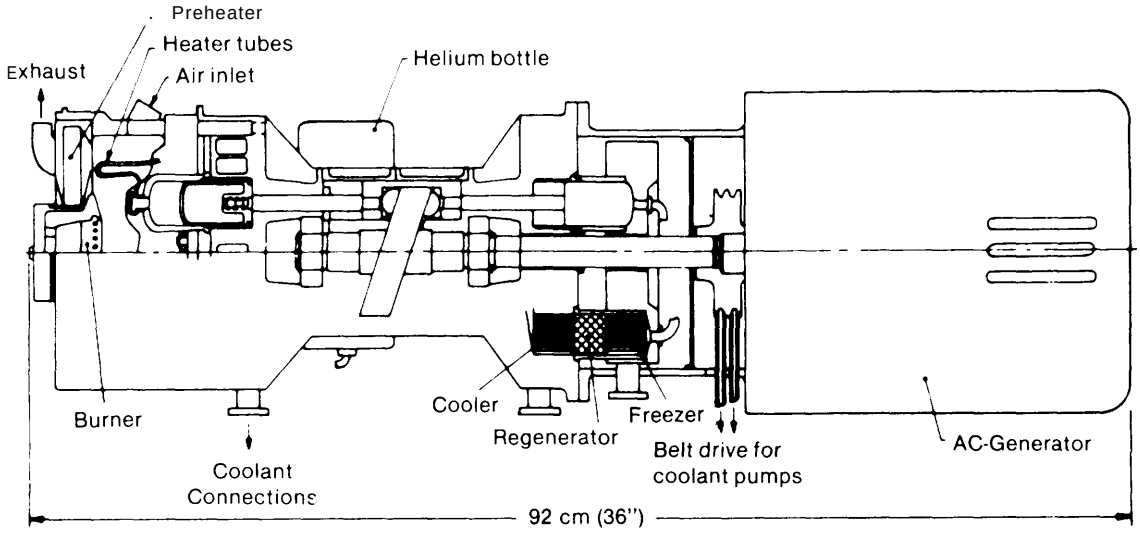

SOURCE H A Jaspers and F K du Pre, *Stirling* Engine Design *Studies of an Underwater Power System and a Total Energy System,* (N V. Philips publication)

these devices use mechanical linkages of some sort. The efficiency of operating engines averages between 24 and 30 percent (about 45 to 50 percent of ideal Carnot efficiency).

An optimized engine operating at its most efficient speed could, according to these estimates, produce 43 percent efficiency operating between 1,4000 and 1600 F (about 65 percent of ideal efficiency). Achieving this high efficiency, however, would require operating the engine at less than its maximum designed power, thus increasing its cost. The performance reported for free-piston devices has varied considerably because many different heat exchangers, regenerators, and thermodynamic cycles are being examined. Consequently, it is much too early to make a reliable estimate of the **efficiency of commercial systems. The efficiencies** of devices constructed to date by the Sunpower, Inc., group **have been relatively** low (10 to 30 percent cycle efficiency or 16 to 48 percent of ideal efficiencies) (table IX-9).

The performance of free-piston devices reported by Energy Research and Generation Corporation (ERG) is shown in table IX-10. These reports claim measured "indicated" efficiencies as high as *87* percent of ideal Carnot efficiency. In the device operating between 1,4000 and 120°F, this results in a cycle efficiency of 60 percent. The feasibility of achieving these efficiencies is corroborated by estimates made by a group studying Stirling engines **in the joint Center** for Graduate Study at Richland, Wash., and by Beale of Sunpower, Inc., although there appears to be some disagreement as to how far development has progressed towards this objective. 5354

The performance, of course, is largely sensitive to design details, including the size and design (and hence the cost) **of heat ex-**

[53] W **R** Martini, *The Thermohydraulic Converter,* **prepared for the joint Center for Graduate Study,** Richland, **Wash , Mar. 4, 1975**

[54] **W .** Beale, Sunpower, Inc **, private communication, July 1976,**

Table IX-8.—Stirling Engine Characteristics

Manufacture	Phillips 4-215	Phillips	United Stirling	GMRL GPU-3	Phillips 4-235	Phillips 40 hp	United Stirling	MAN-MWM 4-400
Status	Proto (Ford)	Analy (optimized)	Proto	Proto	Proto	Proto	Analy phase I	Proto
Type	Two-piston	Piston-disp	Two-piston	Piston-disp	Piston-disp	Piston-disp	Two-piston	Piston-disp
Working fluid	H_2	He	H_2	H_2	He	H_2	H_2	He
Max pres P psi	2,850	3,200	2,100	1,000	3,200	2,058	2,100	1,570
No of cylinders	4	4	4	1	4	1	8	4
Max bhp	170	275	49	11	200	40	200	120
Rpm at max power	4,000-4,200	1,600	3,400	3,600	3,000	1,500	2400	1,500
Max torque, ft-lbs	300	1,287	120	19	253	108	520	475
Rpm at max torque	1,400	400	955	1,200-2,400	1,000	900	600	700
Gas temp (hot), °F	1,300	1,400	1,275	1,400[a]	1,260	1,200	1,325	1,170
Gas temp (cold), °F	175	160	160	180	108	60	160	105
Efficiency at max bhp (%)	24	30	24	25	30	30	30	29
Max efficiency, %	32[b]	43[b]	30	26.5[b]	31	38	35	32
Power at max efficiency, bhp	75	100	35	7	175 (approx)	23	76	88
Rpm at max efficiency	1,100-2,000	600	2,000	1,900	1,800	725	1,200	1,000
Weight,[c] lb	750	N/D	N/D	165[d]	1,272	N/D	1,435	N/D
Dimensions,[c] ft	N/D	4.9 x 4.3 x 2.2	N/D	1.3 x 1.3 x 2.4[e]	4.1 x 1.7 x 3.6	N/D	3.7 x 2.7 x 3.1	5.0 x 2.3 x 4.3
Applications	Auto	Bus	Auto	EPS	Bus	LRE	Bus, truck	LRE

[a]Heater tube wall temperature.

[b]Net brake efficiency accounting for all auxiliaries including cooling fan, combustion blower, and water pump, among others.

[c]Includes all auxiliaries except cooling system with fan and transmission.

[d]Engine and auxiliaries less electrical power generator.

[e]Engine only.

Abbreviations:
Proto: operating prototype engine, LRE: Laboratory Research Engine; Analy: computer design projection; N/D: no date; EPS: Electric power supply.

SOURCE: Jet Propulsion Laboratory, "An Automobile Power Systems Evaluation," op. cit., p. 6, 8.

changers used, the gas pressure used in the cycle, the exact thermodynamic cycle chosen, and other variables.

Performance With Waste Heat

As noted earlier, Stirling devices have a great advantage in total energy applications because a very large fraction of the energy not used by the cycle appears in the cooling water. This is shown quantitatively for systems burning fossil fuels in figure IX-38. In a solar application, the percentage of energy recoverable in the coolant water would be even higher, given that there would be no losses in the exhaust. The performance of Stirling- and Ericsson-cycle devices operating at different coolant temperature is shown in figure IX-39 for two different assumptions about engine-generating efficiency.

Table IX-9 .—Performance of Free-Piston Stirling Engine Designs of Energy Research and Generation Inc.

	ERG	ERG	Allison
Ind effic* (%)	42	60	50
IMEP/(p_{max} - p_{min})	.32	.37	.41
Head add temp (F)	780	1400	1220
Head rej temp (F)	110	120	170
Carnot effic (%)	54	69	62
Carnot effect (%)	78	87	80
Phase angle (deg)	110	90	118
Press ratio	1.73	1.29	1.79
Displ (in^3)	3.02	1.79	4.81
Max press (psia)	88	2115	1985
Ind work/cycle*(ft lb_f)	3.0	26.1	144
Frequency (Hz)	12.5	60	50
Ind* hp	.067	2.85	13.1

*Indicated work includes gas friction work

SOURCE: Reproduced from "Thermal Oscillators," G.M. Benson, paper presented at 8th IECEC meeting, Aug. 14, 1973.

System Costs

It is **impossible to estimate the costs of Stirling and Ericsson cycles with any precision,** since no practical devices are on the market. The cost will also depend on the efficiency and the lifetime expected of the system. In general, efficiency is improved with large heat-exchange surfaces, but heat exchangers are expensive.

There could be some difficulty in adapting current designs to mass-production techniques since many current designs require complex heat exchangers which would need many separate welds and brazements. **It** should be possible to overcome this difficulty with advanced heat-exchanger designs, but the question of costs cannot be resolved until a production unit is designed.

Estimates made by the Jet Propulsion Laboratory in their survey of automobile-power systems indicate that a "mature" Stirling engine, operating at a temperature of 1,400" F, would cost approximately $14/kW wholesale, and would sell for approximately $18/kW at the retail level.[55] **(This, of course, assumes production on the scale of current automobile product ion.) A further study of the adaptations needed to install a 42-percent efficient Stirling** device **in a solar energy application resulted** in an estimate of about $38/kW for the engine, $27/kW for the alternator (installed on **the** engine), and about $27/kW for miscellaneous switching equipment and controls.[56] This results in a total cost of about **$92/kW**

Figure IX-38.— Heat Balance for the Stirling and Diesel Engine

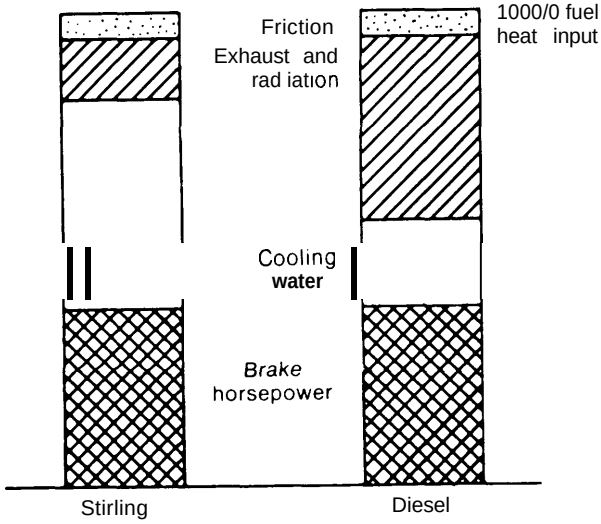

SOURCE R J Meijer(N V Philips), 'The Philips Stirling Engine," De Ingenieur (621 41), page 21

Table IX-10.-Performance of Sun Power Free-Piston Devices

Power (Watts)	Cycle (%) Efficiency ***	% Carnot	T_{hot}(°C)	T_{cold}(°C)
20	10	18	400	25
70	18	30	500	25
100*	15	24	500	25
2000	30**	48	500	25

*Air System
**Expected
***Notice that the efficiencies in this table are complete cycle efficiencies while the ERG efficiencies are "indicated" efficiencies.

SOURCE: W. R. Beale and C. F. Rankin, Jr., "A 100 Watt Stirling Electric Generator for Solar or Solid Fuel Heat Sources," IECEC 75 Record, p. 1021.

[55] *An Automobile* **Power S** *ystems Evacuation, Jet* Propulsion **Laboratory, Volume 11, pp 11-12**

"Richard Caputo, J PL, Program Manager, *Comparative Assessment of Orbital and Terrestrial Power Systems, p.24*

Figure IX-39.— Electric and Thermal Output of a Stirling Engine

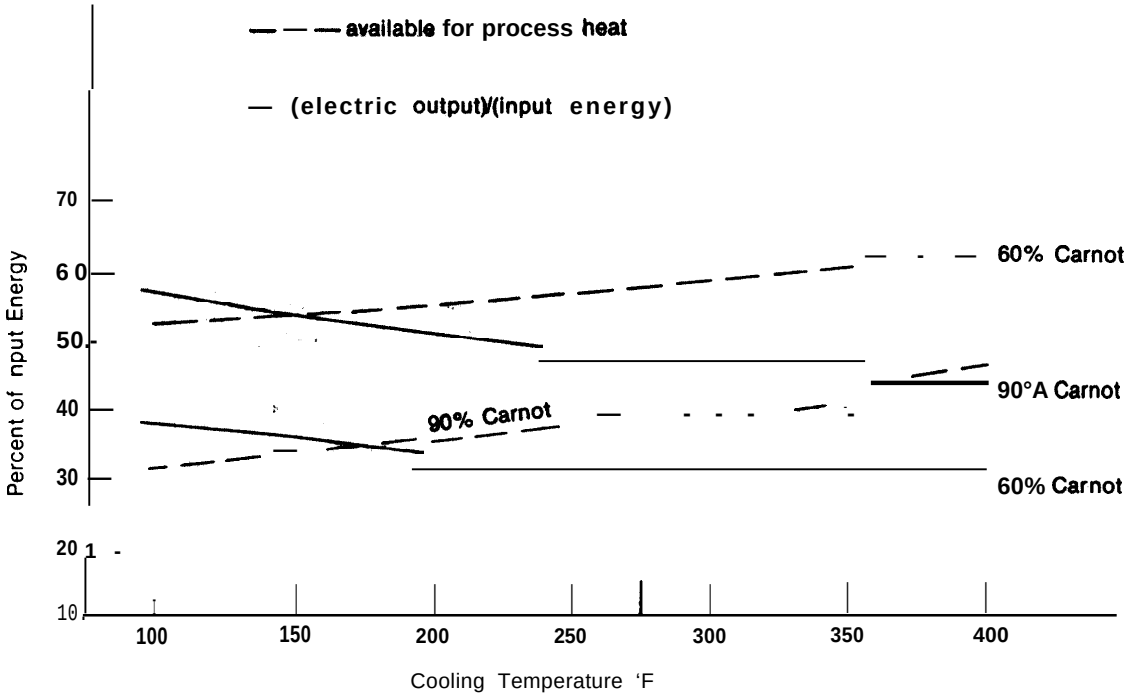

Assumptions:
inlet temperature = 1400°F
Generator efficiency = 90%
energy not recoverable = 59'0

SOURCE, Prepared by OTA.

(all prices are given in terms of price per-peak- power output; average power would be substantially lower). **These prices also do not include the cost of the receiver and heat pipe needed to transmit solar power to the engine.**

Another estimate of the cost of a Stirling engine/generator set was made by Philips and Ford Aeroneutronics for their proposal to construct a solar, total energy system in Disney World. This estimate for an engine/-generator and switch-gear amounted to $400/kW, with an aside noting that this could be reduced to $100/kW if large-scale production were undertaken .57

The cost of free-piston devices could be lower than those of the mechanically coupled systems because of their inherent simplicity, but again the lack of commercial devices makes cost estimates difficult. The Energy Research and Generation Corporation has estimated that their free-piston design is amenable to mass-production techniques and could be produced for about $30/kW, with an additional $10/kW for the linear alternator.[58]

Another way of estimating the cost of the Stirling-engine devices, manufactured at moderate production rates, is to compare

[57] Pons, et al., op. cit., p. 13.

[58] Glen Benson, Energy Research and Generation Corporation, private communication, December 1976.

them with the cost of conventional gasoline- and diesel-powered engine-generator sets. Figure IX-40 indicates that the Stirling devices with mechanical linkages should have a weight per-unit-of-power which is somewhere between gasoline and diesel engines. Assuming that the Stirling devices are roughly of the same complexity, figure IX-41 can be used to estimate costs of about $75 to $150/kW for shaft output Stirling engines of about 100 kW capacity.

Figure IX-40.—Weight-to-Power Ratios of Engines With Internal Combustion and of Stirling Engines

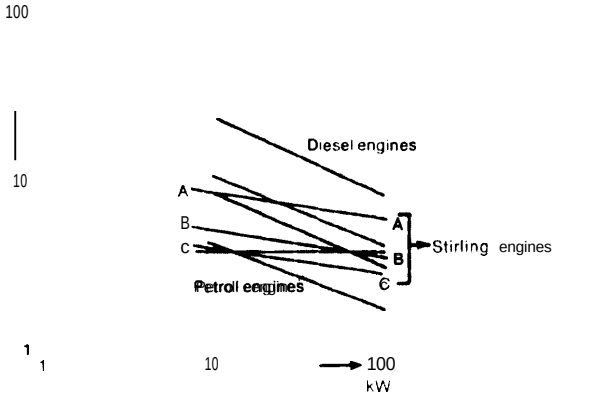

A A Stirlingengines present laboratory types
B Laboratory models to be expected within a few years
C Stirling engines developed for vehicles

Weight to-power ratios of engines with Internal combustion and of Stirling engines

SOURCE
R J Meyer Combination of Electric Heal Battery and Stirling Engine—An Alternative Source of Mechanical Power, reprinted from DenkschriftElektrospeicherfahrzeuge ' Volume 1 1/1 969

Figure IX-41.—Cost of Diesel Engines

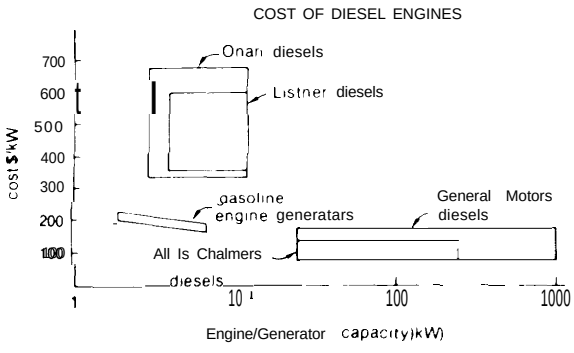

SOURCE Prepared by OTA using manufacturer's data

Free-piston designs could weigh significantly less than the mechanical devices shown in the figure. Dr. Benson of ERG has estimated that their device could weigh as little as 5 lbs/kW (2.3 kg/kW).[59]

State of the Art

Engines based on the Stirling and Ericsson cycles have been in operation since the early 19th century, The Stirling engine was patented in 1816 by a Scottish clergyman, John Stirling; Ericsson-cycle devices were patented a few decades later. (The Ericsson cycle is named for the Swedish-American inventor, John Ericsson, who, among his other accomplishments, was the designer of the Union ship, The *Monitor.)* These early designs used air as the working medium and were expensive, heavy, and relatively inefficient—since the designers lacked both materials and analytical methods capable of optimizing the design of thermodynamic cycles.

Interest in Stirling engines was revived in 1938 by the Philips Corporation of the Netherlands, when that company was searching for an engine to burn a variety of fuels and provide quiet and reliable **power to military radio receivers.[60] The company,** one of the world's largest multinational firms, now has over 100 people working on the development of Stirling engines. Many world patents for Stirling engines are held by Philips, and the vast majority **of work which** has been done on Stirling devices in this century has been done either by Philips or under license from Philips. The company has several well-developed engine designs, some of which have operated over 10,000 hours without failures.[61] They have been used to power a number of vehicles including boats and a small bus. The basic development engine

[59] **Benson, ibid.**

[60] R. **J. Meijer and C. L** Spigt, *The Potential of the Philips Stirling Engine for Pollution Reduction and Energy Conservation.*

"Norman D. **Postma, et** al., *The Stirling Engine for Passenger Car Applications,* **Ford Motor Company publication.**

has been a 25-hp device using two rhombic-drive cylinders. About 30 to 40 of these engines have been built by Philips or are under license from Philips.[62]

The U.S. National Bureau of Standards is testing one of the few Philips engines that is outside of the Netherlands to measure its performance in total energy applications.[63]

The Philips work stimulated interest in Stirling equipment by a number of different companies. The General Motors Company had an extensive program in the development of Stirling engines which began as a cooperative program with Philips. Research and design studies were conducted on a number of different engine designs including free-piston devices. The company had accumulated over 28,000 hours of engine running-time experience between 1959 and the abrupt termination of the project. [b']

In 1972 the Philips Company entered into a contract with the Ford Motor Company to develop a Stirling automotive engine. Work has been underway since then. The program began with an attempt to use a swashplate Stirling engine with a 1973 Ford Torino. Problems have apparently developed with the original approach, however, and progress is slower than had been expected.

The United Stirling company of Sweden has also done extensive development work on Stirling equipment and is apparently planning to have a device ready for field-testing in Swedish iron mines by 1979.[65] The company plans to market 40-, 75-, and 150-kilowatt engines shortly thereafter for use in mine-pumping operations (where their low emissions, fuel economy, and quiet operation should be great benefit), in total energy systems for homes, and for automobiles and buses.[66] The United Stirling devices use a "sliding seal" instead of the "roll-sock" seal employed by most of the Philips engines.

The Thetford Corporation of Michigan recently formed a joint venture with Sweden's Forenade Fabriksverken (FFV) to manufacture a Stirling total-energy system for recreational vehicles which the company hopes to have on the market in 1978."7

In addition to Philips and the United Stirling Company of Sweden, **MAN of Germany has accumulated many years of experience with Stirling devices, some of it based on Philips' designs.**

Much less work on Stirling and Ericsson cycles is being done in the United States. The Atomic Energy Commission and the Heart and Lung Institute at the National institutes of Health initiated a program in 1966 to develop an artificial heart. Several designs were proposed using electric motors and Rankine and Stirling engines. The program attracted several U.S. companies, including Aerojet, Thermo-Electron Corporation, ERG, Inc., Air Products and Chemicals, Inc., and Westinghouse Astronuclear (under contract with Philips).[68]

Work on novel engine designs for transportation and automotive applications is being performed by the Energy Research and Generation Corporation, Sunpower, Inc., and by a variety of university groups. The work at Sunpower is based, in part, on funding from the American Gas Association with the objective of developing a heat pump able to operate from natural gas. The company is also working under an ERDA grant to develop an engine using a radioactive source to provide electric power for

[62] Pens, op. cit , p 11.

[63] D. Diddion, National Bureau of Standards, private communication, December 1976

[64] W H. Percival, Historical *Review of Stirling Engine Development in the United States from 1960 to 1970,* prepared for the ERDA (EPA contract 4-E8-00595), July 1974, page 124,

[65] Hallare, Bengt, Director of Corporate Planning and Marketing, United Stirling, et al., "Development of Stirling Engines in Sweden and Their Application in Total and Solar Heated Energy Systems. " Paper delivered to the 1977 International Solar Energy Conference and Exhibit, Palm Springs, Fla., 1977. *Proceedings* published by the Northrop University Press.

[66] W. H. Percival, U.S. representative of the United Stirling Corporation, private communication, May 6, 1977.

"Ann Arbor News, Mar. 25,1977.

[68] William Beale, *A Stirling-Hydrosta* tic *Drive* for *Small Vehicles,* provided by Sunpower, Inc.

spacecraft.[69] Figure IX-42 shows the Sunpower device installed in a solar collector.

Work on linear alternators suitable for attachment to Stirling- and Ericsson-cycle devices for electric-power generation has been performed by the Energy Research and Generation Corporation and by the Mechanical Technology Corporation. Both groups have tested operational designs, but neither firm has a unit on the market. Work on the use of Stirling engines for transport is also being done by the Sunpower Corporation, Energy Research and Generation Corporation, and Polster.[70]

[69]G Benson, *Thermal Oscillators,* op cit

[70]N E Polster and W R Martini, "self-starting, Intrinsically Control led Stirling E ngine," *IECEC Record,* pp 1,511-1,518, 1976

Although a number of groups have investigated Stirling- and Ericsson-cycle devices, the engines must be considered to be in a relatively primitive state of development. The alternative cycles have benefited from many years of careful design work, while most Stirling designs have remained in the laboratory. No Stirling engine is being produced on a large scale anywhere in the world.

OTHER HEAT-ENGINE DESIGNS

The Thermionic Converter

The thermionic device shown in figure IX-43 can operate at *very* high temperatures

Figure IX-42.—200-Watt, Sun power Stirling Engine, Mounted in Concentrating Collector

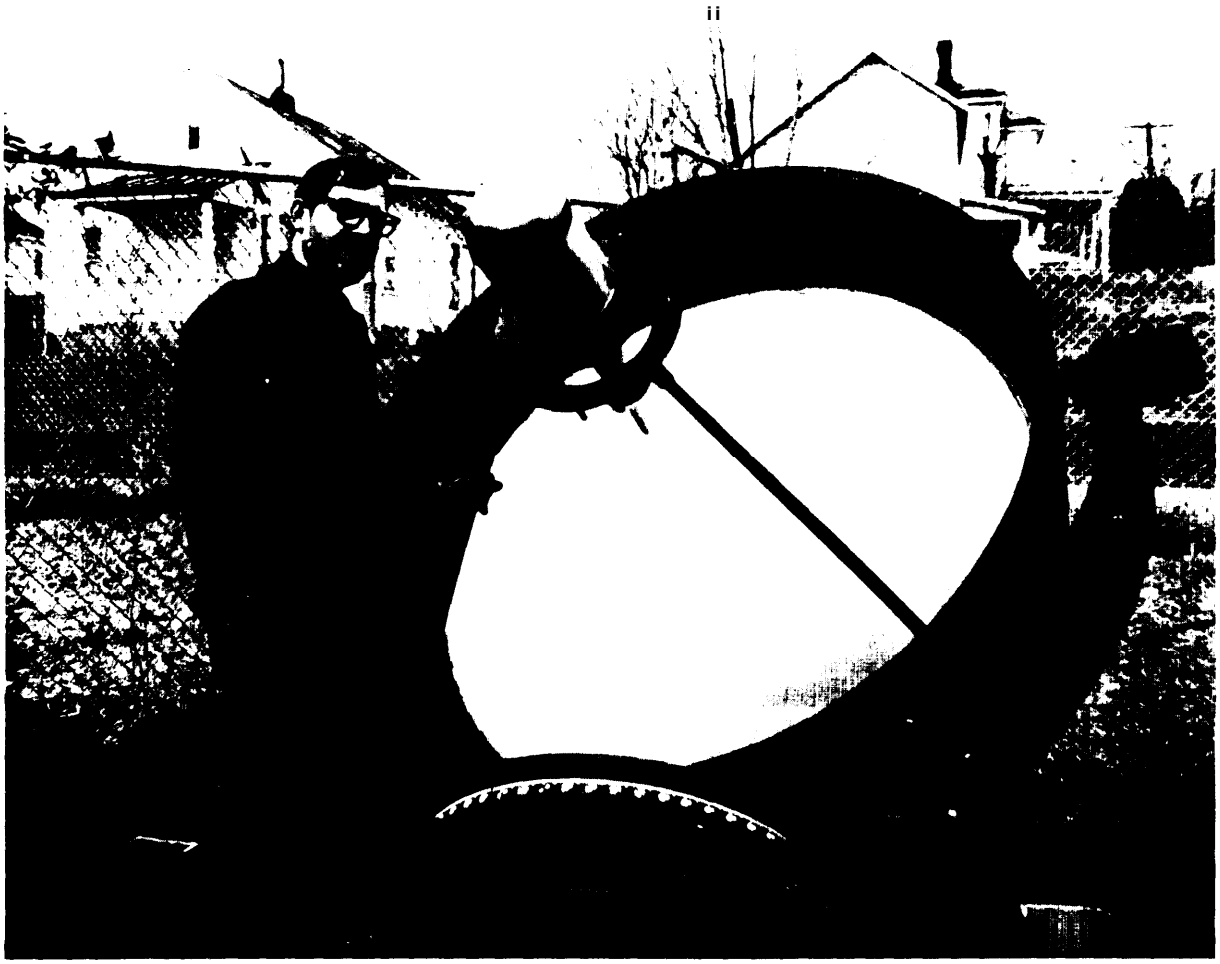

Photo credit Sunpower, Inc

Figure IX-43.— Identification of Thermionic Converter Components

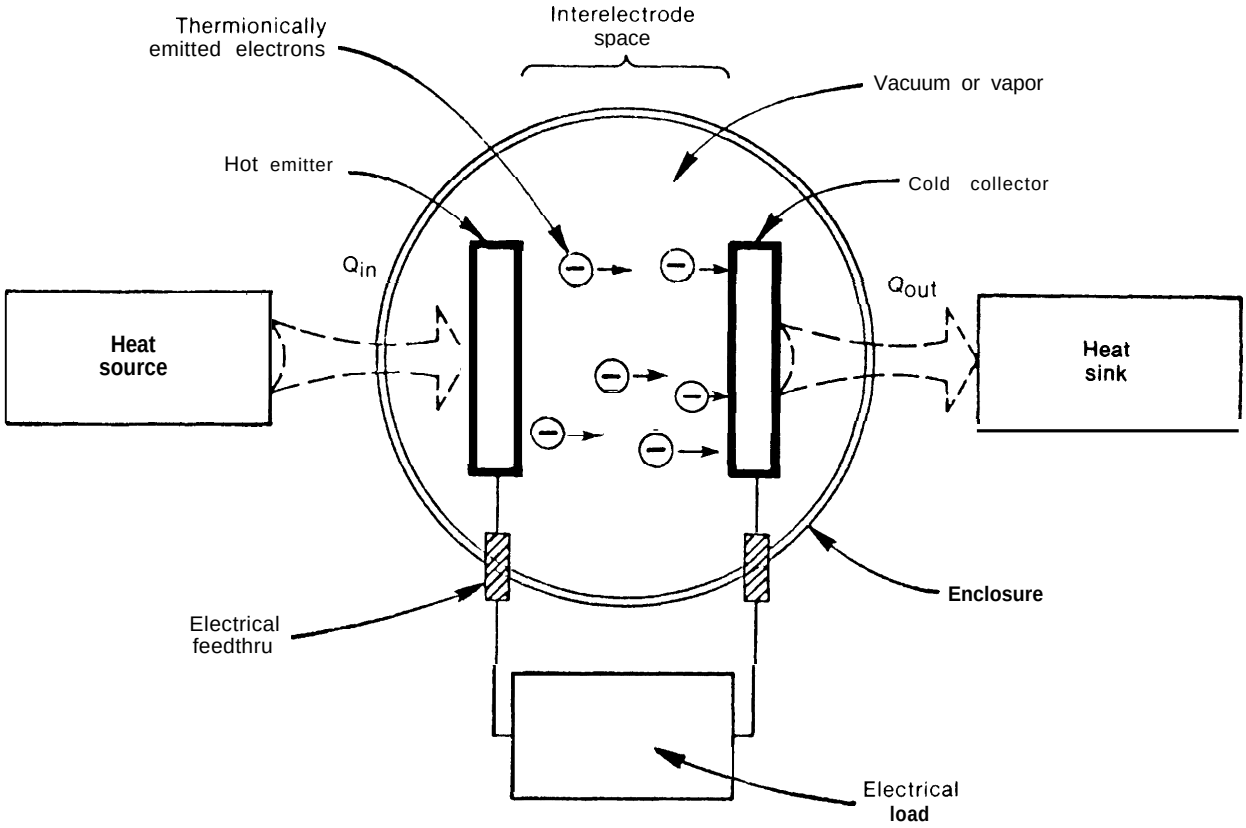

SOURCE Thermoelectron Corporation

and can achieve extremely high-power densities (on the order of 2 to 10 watts/cm^2 of receiver surf ace).” The hot emitter and the cooler collector of a therm ionic converter are separated by a vacuum or by an ionized gas. A current can be sustained if the hot side of the diode emits electrons at a greater rate than the cold side. Electrons evaporated from the emitter flow across the interelectrode gap to the collector, where they condense and are returned to the emitter via the electrical load. Some of the thermal energy transferred from the hot to the cold side of the diode is carried directly by electrons, which are the “working fluid” of this engine. The heat flow is thus translated directly into a flow of electricity.

Therm ionic energy conversion has a number of desirable characteristics: 1) no moving parts, 2) heat rejection at relatively high temperatures, 3) lends itself to modular construction, 4) potential for efficiencies up to 40 percent, 5) heat input in an intermediate temperature range (1 ,*2000* to 1,8000 K), 6) the mechanical simplicity associated with no moving parts implies reliability, and 7) the high temperature of heat rejection makes therm ionic converters well suited for topping steam powerplants, because the heat rejected from the collectors is available at a high temperature to generate steam for conventional turbomachinery.

Efficiencies as high as 5 to 15 percent have been reported for devices working be-

“William C. Reynolds and Henry C. Perkins, Engineering Thermodynamics, McGraw H ill, 1970, p. 309.

tween 1,160" and 2200 F (13 to 38 percent of ideal Carnot efficiency) .72 A curve of performance predicted for advanced designs of therm ionic converters is shown in figure **IX-44. It can be seen that high efficiencies are possible** if the losses which now limit performance can be reduced.

The feasibility of therm ionic conversion has been demonstrated with a variety of hydrocarbon, solar, radioisotope, and reactor heat sources. Stable in-pile operation has been achieved for over **16,000 hours.** The Soviet Union has progressed to the third generation in-core therm ionic reactor with electrical outputs of over 7 kilowatts.

Figure IX-44.— Effect of Collector Temperature on Thermionic Efficiency

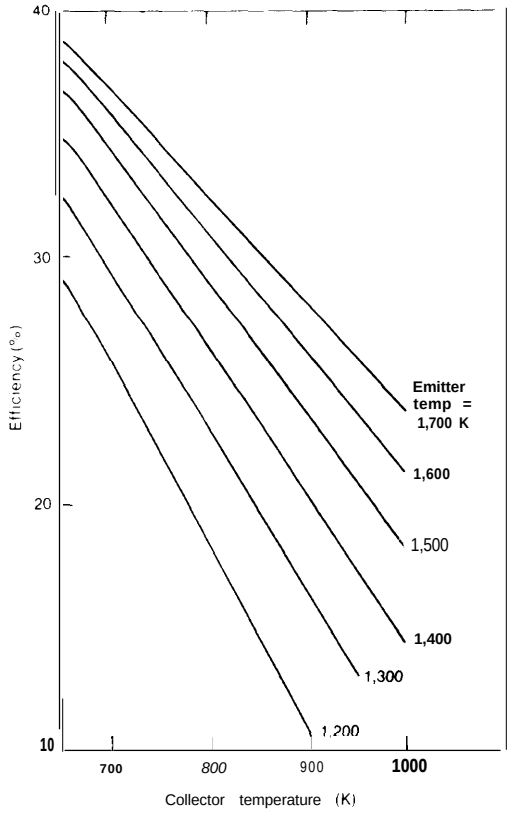

SOURCE Thermo Electron Corporation

[72] Huff man, Thermo-Electron Corp , private communication, January 1977

While a good base of high-temperature, thermionic-conversion technology exists, thermionics has yet to achieve practical application with fossil fuels because the emitter temperatures currently required for competitive power densities and efficiencies limit the operating life of the "hot shell" (i.e., the protective structure which isolates the converter, per se, from the combustion atmosphere) to several hundred hours. **In** order to reduce the operating temperatures of converters to levels where the hot shell will have greatly extended life while maintaining converter efficiency, it is necessary to develop improved emitter and collector surfaces, as well as decrease the plasma losses occurring as the electrons flow across the interelectrode space. Reasonable progress is being made in both areas.

Thermoelectric Conversion

Electricity can also be generated directly from a source of high-temperature thermal energy using a solid-state "thermoelectric" junction. 73 These devices, which operate on the same principle as thermocouples, are frequently used to power spacecraft using isotopes as power sources. Devices operating with an isotope source of 1,000"C (1,832 °F) are capable of efficiencies on the order of 3 to 6 percent. 74

The Nitinol Engine

Thermal energy is converted into mechanical work when a heated metal expands, A nickel titanium alloy called Nitinol developed by the Naval Ordnance Laboratory (Ni + Ti + N. O. L.) in 1958 has unique thermal properties which can be used to construct a primitive heat engine— one design is shown in figure IX-45. Nitinol deforms easily at low temperatures but returns to its original shape with considerable force when heated. Several working devices **have been**

[73] P **Rouklove,** *Tests and Evaluation of Multi-hundred Watt Thermoelectric* Generators *at JPL, 12th* IECEC **Conference, p 1,287**

[74] J E Boretz, *Reactor Hybrid-Organ/c Rankine Cy-c/e Electric* Power *Sys terns for Space Applications,* 12th I ECEC Conference, p 1,318

Figure IX-45.—The Nitinol Engine

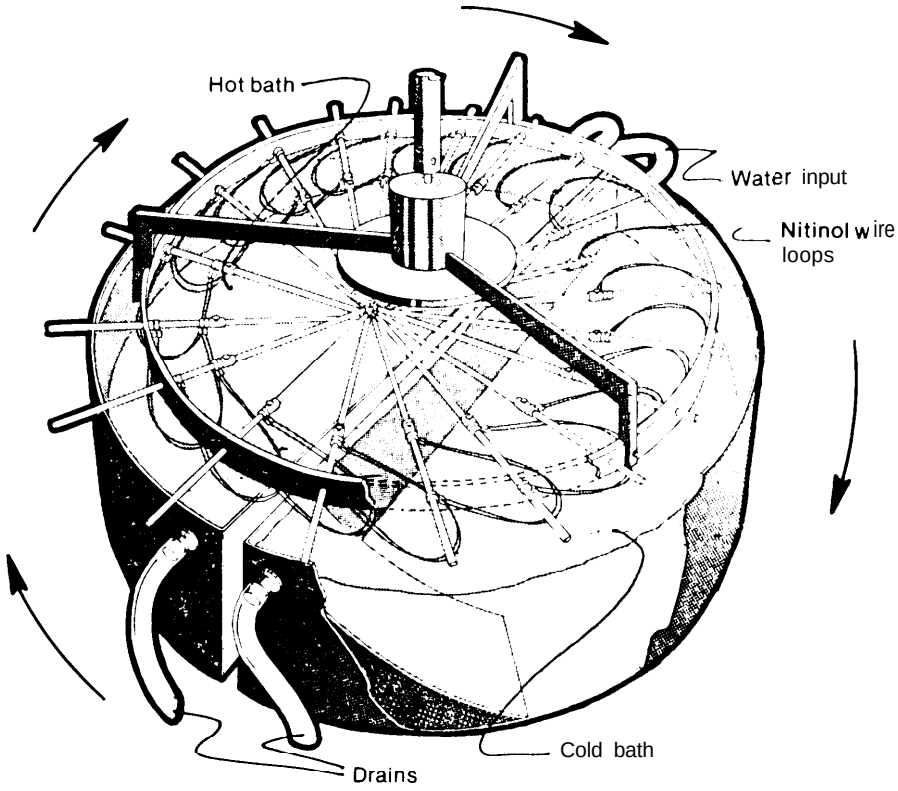

SOURCE *The CoEvolution Quarterly,* **Spring, 1975, p. 70**

constructed by Ridgeway Banks at the Lawrence Livermore Laboratory.

Osmotic-Pressure Engine

Thermal energy can also be converted to mechanical energy in the osmotic-pressure cycle. The heat is used to distill a dilute solution into pure solvent and a concentrated solution. Energy can be recovered if the solvent and concentrated solutions are pumped into different sides of a chamber separated by a semipermeable membrane. The solvent is forced across the membrane with a pressure equal to the difference between the osmotic pressures and hydraulic pressures of the fluids on either side of the membrane. The osmotic pressures can be quite large. A saturated solution of NaCl in water, for example, has an osmotic pressure of 380 atmospheres (about 4,000 m of water). Every cubic meter of water sent into the reaction chamber with a saturated NaCl solution, therefore, has a potential energy of about 11 kWh. The fraction of this energy which can be retrieved in a practical system has not been established, although some preliminary design work has been done on membrane reaction chambers. 75 76 Membranes suitable for use in these systems are commercially available. Du Pont, for exam-

[75] S. Loeb, **"Production of Energy From Concentrated Brines by Pressure-Retarded Osmosis: 1, Preliminary Technical and Economic Correlations,"** *Journal of Membrane Science 1* **(1976),** p, **49.**

7 S. Loeb, **et al., "Production of Energy From Concentrated Brines by Pressure-Related Osmosis: 11. Experimental Results and Projected Energy Costs,"** *Journal of Membrane Science, 1* **(1976),** p. **249.**

pie, has a membrane called "Permasep," designed for use in desalinization plants, which costs about $4/m^2 of active surface. One square meter of this surface is able to pass about 0.16 m^3/day when a pressure difference of 400 atmospheres is developed across the surface. 77 Waste heat can be recovered from the system via the condenser of the distillation unit.

ENVIRONMENTAL AND SAFETY PROBLEMS

FLUOROCARBONS

Many of the currently available low-temperature heat engines employ fluorocarbons identical to the refrigerants now used in home and small industrial refrigeration and air-conditioning equipment: F-1 1 (CCl_3F), F-12 (CCl_2F_2), and F-22 ($CHClF_2$). These substances have great chemical stability at low temperature, but this very chemical stability may lead to severe environmental problems. Because fluorocarbons do not decompose once released into the environment, they remain in the atmosphere and eventually react chemically with the Earth's ozone layer, possibly reducing the ability of the ozone to shield the Earth's surface from the Sun's ultraviolet light.[78]

The environmental, biological, and health effects of stratospheric ozone changes are only now being discovered. Some scientists suggest that changes in stratospheric ozone levels could cause changes in the Earth's climate, including changes in temperature and wind patterns. 79 The health effects of changes in the stratospheric ozone are not fully understood. The decreased ozone layer results in an increased incidence of ultraviolet radiation on the Earth's surface. Some evidence supports a correlation between ultraviolet radiation and malignant melanoma, the most serious, often fatal, form of skin cancer.[80] Studies have indicated that increased ultraviolet irradiation results in increased incidence of nonfatal, nonmelanoma types of skin cancer in humans.[81] Increased ultraviolet radiation may also have some adverse effect on human eyes and eyesight,[82] and possibly on growing plants, as well.

In addition to the ozone depletion caused by the release of fluorocarbons into the environment, and the coincident human health effects, direct health effects from exposure to fluorocarbons have been reported in various animals. These effects include influences upon the respiratory and circulatory systems in mice, rats, dogs, and monkeys. 83 Research into the environmental and health consequences of fluorocarbons has received impetus from concern over the widespread use of fluorocarbon propellants in aerosol sprays.[84]

Some fluorocarbons leak into the environment from facilities which manufacture refrigeration equipment and from abandoned or malfunctioning units. Estimates indicate, however, that less than 3 to 6 percent of the fluorocarbons lost into the environment come from this source, even though the refrigerants market constituted 28 percent of

[77] **S Loeb, op cit , II, p 254.**

[78] M. J Molina **and F J Rowland, "Stratospheric** Sink **for Cholofluoromethanes Chlorine Atom Cata** lyzed **Destruction of Ozone, "** *Nature* **249.810-812, 1974.**

[79] NAS **Report, pp. 72-78**

[80] NAS **Report, pp 81-89**

[81] **IMOS Report, p. 70.**

[82] **I bid., p. 74,**

[83] D. **M. Aviado, "Toxicity of Aerosol Propellants in the Respiratory and Circulatory Systems IX, Summary of the Most Toxic:** Trichlorofluoromethane (F11 **),"** *Toxicology,* 3:311-319, **1975.**

"See e g , M. B. McElroy, "Threats to the Atmosphere, " Harvard *Magazine,* 78:1 **9-25, 1976; J E** igner, Unshielding **the Sun... Environmental Effects,** *Environment, 17:1* **5-18, 1975;** A.K.A. **ed,** Unshielding **the Sun. . .**Human **Effects,** *Environment, 17:6-14, 1975*

the total fluorocarbon market in *1972.*[85,86] Recent studies indicate that losses from refrigeration equipment can be reduced, especially those from automobile, home, and commercial air-conditioning units. 87

The use of a freon-based heat engine to provide solar air-conditioning would increase the amount of freon in a typical home by a factor of 2 to 3. A house using a freon-based engine to provide 100 percent of residential electrical and air-conditioning needs would need *5* to 6 times more freon than a conventional house.

The environmental impact of this increase in fluorocarbon use (independent of other fluorocarbon uses such as aerosol propellants) is yet to be fully evaluated, but because of the possibility of severe environmental damage either from fluorocarbons or their consequent ozone depletion, these impacts are being analyzed. "

Although ozone levels fluctuate worldwide, it is believed that an overall depletion has occurred, perhaps because of fluorocarbon usage.[89] The effect of this level of depletion is still controversial. It appears, however, that the use of fluorocarbons in onsite energy production will not be a major problem. This is because only a low percentage of environmental fluorocarbons result from loss due to use as a refrigerant. Until a replacement fluid for fluorocarbons is found, an attempt should be made to minimize their escape into the environment.

Under the Toxic Substances Control Act (Public Law 94-469), the process of regulating use of fluorocarbons is beginning because of the possibility of extremely severe environmental effects. **In the** *Federal Register* of March 17, 1978, the Environmental Protection Agency, Food and Drug Administration, and Consumer Product Safety Commission issued regulations stating that it will be illegal to: a) manufacture aerosol cans containing fluorocarbons after December 15, *1978,* and b) introduce such containers via interstate commerce after April 15, 1979. Uses of fluorocarbons in refrigeration, including onsite solar energy systems, will be regulated later. Use **of** fluorocarbons in onsite solar energy systems is merely one category of use in refrigeration units, however, and as such will not be **subject to immediate** regulation.

NOISE

Because the equipment for onsite energy production may be located in or near living or working quarters, the noise emitted by these systems must be considered as an environmental impact. Solar collectors and energy-storage systems are silent except for the low rumble of intermittent pumps and flowing water, but in systems which employ gas turbines and other types of heat engines, noise could be a problem. Without noise suppression, a gas turbine of a size sufficient to generate all electricity for a single home would emit about as much noise as an unmuffled internal combustion automobile engine at full throttle. '" However, the noise from gas turbines is readily suppressible to levels quieter than a common household furnace fan– less than 40 decibels." This suppression is a normal part of commercial turbine installations. In a total energy system (a system which employs waste heat from energy production for space heating uses), noise suppression of the gas turbine

---

[85] *Halocarbons: Environment/* **Effects of** *Cholofluoromethane* **Release, National Academy of Science, Committee on Impacts of Stratosphere Change, Washington, D. C., 1976 (hereinafter, NAS Report), p. 16.** ***Fluorocarbons and the Environment,*** **Report of Federal Task Force on Inadvertent Modification of the Stratosphere (I MOS), June 1975, (hereinafter, IMOS Report), p.91.**

[86] **IMOS Report at page 88, P. H. Howard and A. Hanchett, "Cholofluorocarbon Source of Environmental Contamination, " Science, 189:21 7-219, 1975.**

[87] **IMOS Report, p. 93**

[88] **Manufacturing Chemists Association,** *Research Program of Effect* **of** *Fluorocarbons on the Atmosphere,* **Dec. 31, 1976, and NAS Report,**

[89] **IMOS Report, P. 380.**

90108-1 20d Ba, at 10 feet,

"Patrick G. Stone, Garrett Corporation, Washington, D. C., personal communication, Feb. 11, 1977,

can be accomplished using a waste-heat boiler, reducing the noise to acceptable levels without added installation costs.

WATER USE IN STEAM CYCLES

The **solar energy systems of a small community or industrial plant, on the order of 15 MW(e), may employ water or steam in** energy conversion.

Although this water will not be polluted by chemicals during this process, it will return to the environment with added heat. **In areas of water shortage, the requirement** for replacing the amount of water lost could constitute a major problem. This is particularly true in dry, sunny climates where solar systems have other advantages, and should be considered prior to installation of such a system. Water requirements would be about the same as for a fossil steamplant of similar capacity.

SODIUM AND POTASSIUM VAPOR

Some of the proposed high-temperature storage schemes require heat pipes which use sodium or potassium vapor as their working fluid. While only very small quantities of these substances are required, they could have minor adverse environmental impacts, although both of these vapors are presently employed in street lighting, and no adverse use impacts have been reported.

Chapter X

ENERGY CONVERSION WITH PHOTOVOLTAICS

Chapter X.— ENERGY CONVERSION WITH PHOTOVOLTAICS

Introduction 393

Photovoltaic cells. 395
Cells Designed for Use in Concentrated Sunlight 400
Optimizing Conventional Silicon Cells for Use in Concentrated Sunlight 400
Interdigitated Back-Contact Cells 400
Gaiiium-Arsenide Cells. 401
The Vertical Multifunction Cell 401
Horizontal Multifunction Cells. 402
Thermophotovoltaic Cell . . . . . .
Multicolor Cells 403

Concentrator Systems 403

Photovoltaic Cogeneration 406

The Credibility of the Cost Goals 407
Markets 408
An Analysis of Manufacturing Costs. 412
Silicon. 412
Thin Films 420

MaterialsAvailability and Toxicity. ... .421
Silicon 422
Cadmium 422
Gallium Arsenide. 423

Performance of Cellsin Real Environments. ..423
PassiveCooling. 424
ActiveCooling. 424

Photochemical EnergyConverslon. 425

LIST OF TABLES

Table No. *Page*

l. a) Key Milestones for National Photovoltaic Conversion Program; and b) Goals for ConcentratorSystemsUsingSilicon Cells .394
2. PhotovoltaicCell Efficiencies 398
3. Temperature Dependence of Photovoltaic Devices 407
4. Market Forecasts for Photovoltaic Devices at Different Prices. 410
5 Years To Achieve Indicated Price Reduction as a Function of Learning Curve and Assumed Growth in Demand 412
6 The Distribution of Costs in the Manufacture of Silicon Photovoltaic Devices Using ContemporaryTechnology. 414
7. The MajorSt6psin Manufacturing a Silicon Photovoltaic Device . . . .:..... 419
8. EffectiveConvective Heat-Transfer Coefficients [k_e] for a Variety of Cooling Systems 424

LIST OF FIGURES

Figure No. *Page*

1. Array of Silicon Photovoltaic Cells Providing PowertoPumpWater 393
2. A Typical Photovoltaic Device 396
3. An lnterdigitated BackContact SolarCell and CrossSection. 401
4. The Vertical MultijunctionCell 401
5. Thermophotovoltaic Converter 403
6. Experimental Concentrating Photovoltaic Array in Operation. The Array Employs Fresnel Lenses and Silicon Photovoltaic Cells 404
7. Breakeven Costs for Concentrating PhotovoltaicCollectorsCompared WithFlat-Plate Devices. .,..... 405
8. Historical Learning Curves From the SemiconductorIndustry. 409
9. PhotovoltaicArray Prices for Several Market Projections. 411
10. Commercial Silicon Photovoltaic Cells ...413
11. Silicon Ribbon Being Grown by the ''Edge-Defined Film-FedGrowth" Process 417
12. Thin-Film Cadmium Sulfide-CopperSulfide SolarCells 420
13. Photochemical Energy Conversion. 425

Chapter X
Energy Conversion With Photovoltaics

INTRODUCTION

Photovoltaic cells (often called "solar cells") are semiconductor devices which are capable of converting sunlight directly into electricity. Generating electricity in this way has obvious advantages. The photovoltaic cells have no moving parts, and they do not require high-temperature or high-pressure fluids. Since they are extremely reliable, quiet, safe, and easy to operate, they are ideally suited to onsite applications. Photovoltaic energy production is unlimited by scarce materials, since cells can be manufactured from silicon, one of the Earth's most abundant elements.

There is no doubt as to the technical feasibility of generating electricity from photovoltaic devices. The units have been used for many years in the space program and to provide power in remote terrestrial sites. The array of silicon cells shown in figure X-1 provides power to pump water in a remote location in Arizona.

The most immediate barrier faced by all photovoltaic systems is the present high cost of the devices. Photovoltaic arrays could be purchased in large quantities in late 1977 for about $11 per peak watt of output. * Electricity from systems using such cells costs $1.50 to $2.00/kWh.

Figure X-1.—Array of Silicon Photovoltaic Cells Providing Power to Pump Water

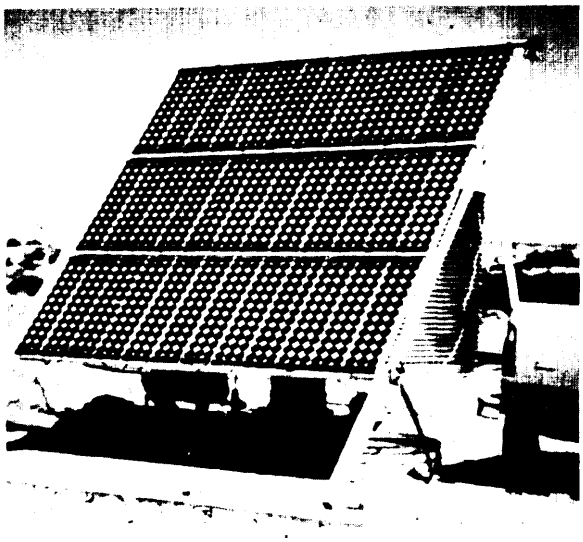

SOURCE Solar Technology International

Development work to reduce the cost of photovoltaic energy can be divided into three general categories:

1. **Reducing the cost of manufacturing the single-crystal silicon cells which are now on the market;**
2. **Developing techniques for mass producing and increasing the performance of cells made from thin films of materials such as CdS/Cu_2S or amorphous silicon, and**
3. **Developing high-efficiency cells which can be installed at the focus of magnifying optical systems,**

It is technically possible to use any of these approaches to reduce costs to $1 to $2

*Photovoltaic prices throughout this paper refer to the selling price of arrays of cells encapsulated to protect them from the weather, f.o.b. the manufacturing facility, in 1975 dollars. The peak output of a cell refers to the output which would be obtained if the cell were exposed to the Sun at the zenith on a clear day.

23-432 O - 78

per peak watt (electricity costing $0.10 to $0.40/kWh) **during the next 3 to 5 years. The achievement of costs below $1 to $2 per watt will require a considerable amount of engineering development work. Progress in any of a number of current research programs would give us considerably more confidence about the prospects for achieving substantially lower costs.**

A set of goals for reducing the cost of silicon photovoltaic devices was established somewhat arbitrarily during the crash Project Independence studies conducted in 1973. The Department of Energy (DOE) believes that, with some relatively minor adjustments, these goals are achievable and is using them for planning purposes. The present goals are: $1 to $2 per watt by 1980-82, $0. SO/watt by 1986, and $0.10 to $0.30/watt by 1990. Current goals are shown in table X-1. The lower cost goals appear to be optimistic but not impossible.

The DOE price goals assume that the arrays will last approximately *20* **years. (Presently, terrestrial arrays are guaranteed for 1 year.) This seems to be an attainable objective, although more data is required on the degradation rate for arrays exposed to the environment for long periods of time. Silicon cells apparently fail only when the material used for encapsulation cracks or leaks. Structural failures and corrosion have occurred in improperly encapsulated devices, ' and most clear plastics darken with prolonged exposure to sunlight, cutting down the light reaching the cells. Glass or acrylic encapsulation should, however, be able to prevent these problems.**

'A Johnson (M ITRE Corporation), private communication, 1977.

Table X-1

a) Key Milestones for National Photovoltaic Conversion Program

	Array price in 1975, dollars per peak watt	Production rate, peak megawatts per year
1. End of FY 1977	11	
2. End of FY 1978	7	
3. End of FY 1982	1-2	**20**
4. End of FY 1986	**0.50**	**500**
5. End of FY 1990	**0.1-0.3**	**50,000**

SOURCE Photovoltaic program program summary January 1978, U S Department of Energy, Division of Solar Technology

b) Goals for Concentrator Systems Using Silicon Cells

	Technical feasibility*		Commercial equipment* •	
	1975 dollars per peak watt (entire system)	**Silicon cell efficiency**	**1975 dollars per peak watt (entire system)**	**Silicon cell efficiency**
1. End of FY 78. . .	**2**	**16%**	**15**	**13.5%**
2. End of FY 80. . .	1	180/0	**2.75**	**16%**
3. End of FY 82. , .	**0.50**	**200/0**	**1.60**	**180/0**

" Laboratory proof of concept + reasonable estimate of cost of commercial system **based** on concept
"* F o.b. price of production technology.

SOURCE Annual Operation Plan, Systems DefinitionProject (FY 1978), Sandia Laboratory

PHOTOVOLTAIC CELLS

All photovoltaic installations will consist of small, individual generating units — the photovoltaic cell. Individual cells will probably range in size from a few millimeters to a meter in linear dimension, A surprising variety of such cells is available or is in advanced development since it has only been in the past 5 years that serious attention has been given to designing cells for use in anything other than spacecraft. Devices are available with a large range of efficiencies and voltages. Some cells are designed to withstand high solar intensities and high operating temperatures, while others are designed to minimize manufacturing costs. The variety should not give the mistaken impression that this is an area where large amounts of private or public research funding have been directed; indeed, many of the projects described here are being conducted by small research laboratories.

The photovoltaic equivalent of power engineering is something of an anomaly in the generating industry since it involves manipulations in the miniature and silent world of semiconductor physics instead of steam tables, gears, and turbine blades. The following discussion provides only a very brief excursion through this complex field. More complete discussions of the topics covered can be found in several recent publications.[2345] All that can be done here is to outline some of the major effects influencing cell cost and performance.

The energy in light is transferred to electrons in a semiconductor material when a light photon collides with an atom in the material with enough energy to dislodge an electron from a fixed position in the material (i. e., from the valence band), giving it enough energy to move freely in the material (i. e., into the conduction band).

A vacant electron position or "hole" is left behind at the site of this collision; such "holes" can move if a neighboring electron leaves its site to fill the former hole site. A current is created if these pairs of electrons and holes (which act as positive charges) are separated by an intrinsic voltage in the cell material,

Creating and controlling this intrinsic voltage is the trick which has made semiconductor electronics possible. The most common technique for producing such a voltage is to create an abrupt discontinuity in the conductivity of the cell material (typically silicon in contemporary solid-state components) by adding small amounts of impurities or "dopants" to the pure material. This is called a "homojunction" cell. A typical homojunction device is shown in figure x-2.

An intrinsic voltage can also be created by joining two dissimilar semiconductor materials (such as CdS and Cu_2S), creating a "heterojunction," or by joining a semiconductor to a metal (e.g., amorphous silicon to paladium) creating a "Schottky" barrier junction.

A fundamental limit on the performance of all of these devices results from the fact that (1) light photons lackin, the energy required to lift electrons from the valence to the conduction bands (the "band gap" energy) cannot contribute to photovoltaic current, and (2) the energy given to electrons which exceeds the minimum excitation threshold cannot be recovered as useful electrical **current. Most of the unrecovered photon energy is dissipated by heating the cell.**

The bulk of the solar energy reaching the Earth's surface falls in the visible spectrum, where photon energies vary from 1.8 eV (deep red) to 3 eV (violet). In silicon, only

---

[2] H J. Hovel, *Semiconductors and Semimetals,* Volume *11,* Solar Cells, Academic Press, New York, 1975

[3] C **E** Bacus, (ed), *Solar* Cc//s, I E EE Press, New York, 1976

[4] A Rothwarf and K W Boer, frog, *in* Solid State *Chem., 10* (2), **p** 77 (1975)

[5] K W Boer and **A** Rothwarf, Ann. Rev. Mat. *Sci.* (6), p 303 (1976)

Figure X-2.—A Typical Photovoltaic Device

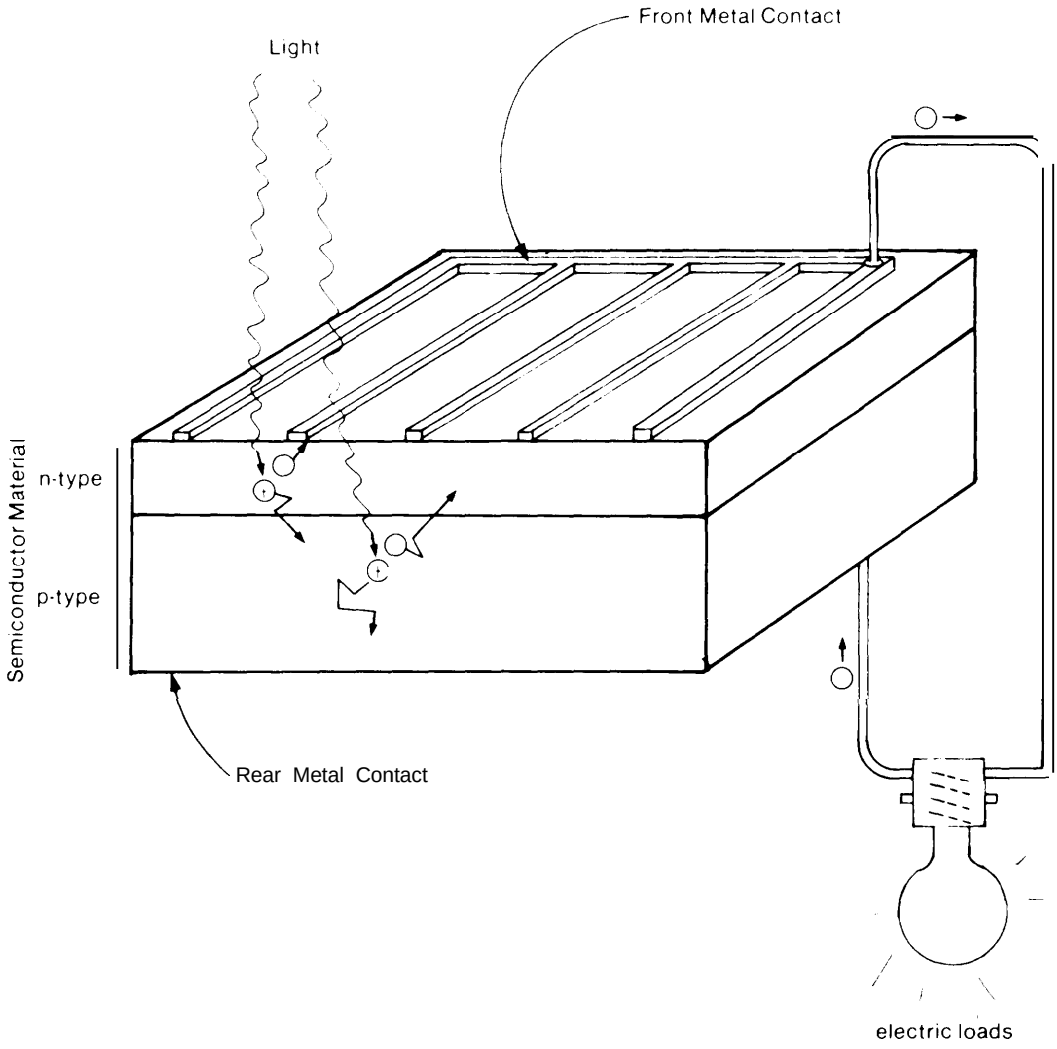

about 1.1 eV is required to produce a photovoltaic electron, and in GaAs about 1.4 eV. Choosing a material with a higher energy threshold results in capturing a larger fraction of the energy in higher energy photons but losing a larger fraction of lower energy photons. The theoretical efficiency peaks at about 1.5 eV, but the theoretical efficiency remains within 80 percent of this maximum for materials with band gap energies between 1 and 2.2 eV.[6,7]

Electrons actually leave cells with energies below the excitation voltage because of losses attributable to internal resistance and other effects, not all of which are understood. [a](An electron leaves a typical silicon cell with a useful energy of about 0.5 eV.)

The same kinds of fundamental limits apply to photochemical reactions in which a light photon with energy above some fixed

[6]M. Wolf, *Energy* Conversion, 11, 63(1 971).

[7]Joseph J. Loferski, "Principles of Photovoltaic **Solar** Energy Conversion," *25th Annual* Proceedings, Power *Sources Conference,* May 1972.

[a]M. Wolf, University of Pennsylvania, "Recent Improvements and Investigations of Silicon Solar Cell Efficiency, " U.S./U.S.S.R. *Joint Solar Energy Workshop,* **Ashkhabad, U. S. S. R., September 1977.**

excitation threshold is able to produce a chemical reaction or a structural change which can be assigned a fixed energy. The theoretical limit to the performance of several types of cell designs is shown in table x-2.

The performance of real cells (also shown in table X-2) falls below the theoretical maximum for a number of reasons. One obvious problem is reflection of light from the cell surface (which can be reduced with special coating and texturing) and reflection from the electrical contacts on the front surface of the cell (which can be reduced with careful contact design). ' Losses also result from the fact that the photo-generated electrons and holes, which fail to reach the region in the cell where they can be separated by the intrinsic voltage, cannot contribute to useful currents.

Photo-generated charges can be lost because of imperfections in the cell crystal structure, defects caused by impurities, surface effects, and other types of imperfections. Losses are minimized if a perfect crystal of a very pure semiconductor material is used, but producing such a crystal can be extremely expensive. Manufacturing costs can probably be greatly reduced if cells consisting of a number of small crystal "grains" can be made to operate with acceptable efficiencies. The size of the grains which can be tolerated depends on the light absorbing properties of the cell material. If absorption is high, photovoltaic electron-hole pairs will be created close to the cell junction where the voltages exist; relatively small grain sizes can be tolerated since the charges need drift only a short distance before being sorted by the field.

Silicon is a relatively poor absorber of light and, as a result, cells must be 50 to 200 microns thick to capture an acceptable fraction of the incident light. This places rather rigorous standards on the sizes of crystal grains which can be tolerated, and al I commercial sit icon cells are now manufactured from single crystals of silicon. It is believed that if polycrystalline silicon is to be used, individual crystal grains must be at least 100 microns on a side if efficiencies as high as 10 percent are to be achieved. [11,12] It is important that the grains be oriented with the grain boundaries perpendicular to the cell junction so that charge carriers can reach the junction without crossing a grain boundary, A number of research projects are underway to develop inexpensive techniques for growing such polycrystalline materials[13,14,15] and for minimizing the impact of the grain boundaries. " Efficiencies as high as 6.7 percent have been reported for vapor-deposited polycrystalline silicon cells with grains about 20 to 30 microns on a side' 7, and a proprietary process capable of producing grains nearly a millimeter on a side reportedly can be used to produce cells with efficiencies as high as 14 percent, Work is underway to improve crystal growing techniques and to enlarge grains with lasers and electron beams.

Perhaps the most intriguing recent development is the discovery that an amorphous silicon-hydrogen "alloy" can be used to con-

[9] J Lindmayer and J F Allison, *Comsat Tech.* #3, 1973, p 1

[10] J R Hauser and P M Dunbar, *IEEE Transactions on Electron* Devices, E D-24 (4), 1977, p 305

[11] A R Kirkpatrick, et al., Proceedings of the ERDA Semiannual Photovoltaic Advanced Materials Program Review Meeting, Washington, D C , Mar 22-23, 1977

[12] A. Baghdadi, et al , ERDA Semiannual Photovoltaic Advanced Materia Is Program Review Meeting

[13] T. L. Chu, et al., *IEEE* Transaction *on Electron Devices, ED-24 (4),* 1977, *pp.* 442445.

[14] H. Fischer and W. Pschunder, (A EG-Telefunken), **"Low-Cost Solar** Cells **Based on Large-Area U** nconventional **Silicon, "** *IEEE* Transactions *on Electron* Devices, ED-24(4), 1977, pp. 438-441

[15] L. D. Crossman, *Research and Development of* Low-Cost *Processes for Integrated Solar* Arrays, (Third quarterly progress report, ERDA EC (11-1)-2721, Energy Research and Development Administration, Washington, DC., 1975), p. 38

"T H Distefano and J. J Cuomo, 1 BM, "Enhancement of Carrier Lifetime in Polycrystalline Silicon, " *Proceedings,* National Workshop on Low-Cost Polycrystal line Silicon Solar Cel Is, Dallas, Tex , May 18-19, 1976.

"T. L Chu, et al., op. cit pp 442-445

"H` Fischer and W Pschunder, op cit , p 438

Table X-2.— Photovoltaic Cell Efficiencies

Device	Probable maximum achievable efficiency	Maximum measured efficiency	Performance of commercial cells	Reference
Silicon devices				
Single crystal homojunction	20-22	19	10-15	(1 ,2)
Polycrystalline homojunction	?	7-14(?)	—	(4,5)
Amorphous Schottky with platinum	15	5.6	—	(6,7)
Thin films				
CdS/Cu_2S (chemical vapor deposit process)(heterojunction)	15	8.6	2-3	(8,9)
CdS/Cu_2S (spray process) (heterojunction)	8-10	5.6	—	(lo)
$(Cd/Zn)S/Cu_2S$ (heterojunction)	15	6.3	—	(9)
$CdS/CuInSe_2$ (single crystal) (heterojunction)	24	12	—	(11)
$CdS/CuInSe_2$ (thin film) (heterojunction)	15	6.9	—	(12)
GaAs (Schottky AMOS)	25-28	14	—	(1 ,13)
Single crystal Schottky with indium-tin oxide	20	12	—	(3)
Cells for use in concentrated sunlight				
Optimized silicon cell (single-crystal nomojunction), 200 times concentration	22	18	12.5	(14,15,16)
Interdigitated back-contact silicon, single-crystal homojunction, 100 times concentration	26-27	15(20?)	—	(17)
Thermophotovoltaic	30-50	13	—	(18)
$Ga_xAl_{1-x}As/GaAs$ (180 times)	25-26	24.5	—	(19)
$Ga_xAl_{1-x}As/GaAs$ (1,700 times)		19	—	(20)
Multicolor cell (GaAs/Si/Ge)	40	—	—	(21)
Vertical multijunction (silicon)	30	9.6	—	(22)

● Techniques for reporting efficiencies differ Wherever Possible, efficiencies were chosen which assume air mass 1 and Include losses due to reflection and contact shading

1. H. J. Hovel, *Semiconductors and Semimetals, Vol. 2: Solar Cc//s* (Academic Press, New York, 1975).
2. J. Lindmayer and C. Y. Wrigley, "Development of a 20 Percent Efficient Solar Cell," (NSF-43090, National Science Foundation, Washington, D. C., 1975),
3. J. V. DeBow, paper presented as part of the *Proceedings* of the Energy Research and Development Administration Semiannual Photovoltaic Advanced Materials Program Review Meeting, Washington, D. C., Mar. 22-23, 1977.
4. 1.1. Chu, S. S. Chu, K. Y. Duh, H. 1. Yoo, */EEE Transactions on Electron Devices, ED-24 (No. 4), 442 (1977).*
5. H. Fischer and W. Pschunder (AEG-Teiefunken). "Low-Cost Solar Cells Based on Large-Area Unconventional Silicon, " *IEEE Transactions on Electron Devices.* pp. 438-441.
6. D. E. Carlson, *IEEE Transactions on Electron Devices, ED-24 (No. 4) 449 (1977).*
7. D. E. Carlson and C. R. Wronski, *Appl. Phys. Lett. 28, 671 (1976).*
8. K. W. Boer and A. Rothwarf, *Annu. Rev. Mater. Sci. 6, 303 (1976).*
9. A. M. Barnett, J. D. Meakim, M. A. Rothwarf, "Progress in the Development of High Efficiency Thin Film Cadmium Sulfide Solar Ceils," (ERDA E (49-18)-2538, Energy Research and Development Administration, Washington, D.C. 1977).
10. G. A. Samara, paper presented as part of the *Proceedings* of the ERDA Semiannual Photovoltaic Advanced Materials Program Review Meeting, Washington, D. C., Mar. 22-23, 1977.
11. J. 1. Shay, S. Wagner, H. M. Kasper, *Appl. Phys. Lett.* 27,89 (1975).
12. L. J. Kazmerski, S. R. White, G. K. Morgan, ibid., 29, 268 (1976).
13. R. J. Stirn (Jet Propulsion Lab). "High Efficiency Thin-film GaAs Solar Cells", 730-9 First Interim Report for DOE/NASA, Dec 1977.
14. I. S. Napoli, G. A. Swartz, S. G. Liu, M. Klein, D. Fairbanks, D. Tames, *RCA Rev.* 38,76 (1977).
15. H. J. Hovel (IBM), "The Use of Novei Materials and Devices for Sunlight Concentrating Systems," *Proceedings DOE Photovoltaic Concentrator Systems Workshop,* Tempe, ARiz., May 1977, pp. 35-54.
16. J. Gibbons (Stanford University), personal communication, October 1977.
17. M. D. Lambert and R. J. Schwarz, *IEEE Transactions on Electron Devices, ED-24 (No. 4), 337 (1977).*

Table X-2 references—continued

18. R. M. Swanson and R. N. Bracewell, "Silicon Photovoltaic Cells in Thermophotovoltaic Conversion" (EPRI ER-478, Electric Power Research Institute, Palo Alto, Cal if., February 1977).
19. J. Harris, *et. a/.* (Rockwell International). "High Efficiency AlGaAs/GaAs Concentrator Solar Cells," *The Conference Record of the Thirteenth IEEE Photovoltaic Specialists Conference- 1978.* Washington, D. C., June 1978.
20. L. W. James and R. L. Moon (Varian Associates). "GaAs Concentrator Solar Cells" *The Conference Record of the Eleventh IEEE Photovoltaic Specialists Conference,* Scottsdale, Ariz., May 1975, pp. 402-408.
21. J. J. Loferski (Brown University), "Tandem Photovoltaic Solar Cells and Increased Solar Energy Conversion Efficiency," *The Conference Record of the Twelfth IEEE Photovoltaic Specialists Conference-1976,* Baton Rouge, La., November 1976, pp. 957-961.
22. H. J. Hovel (IBM). "Novel Materials and Devices for Sunlight Concentrating Systems," *IBM Journal of Research and Development.* Vol. 22, No. 2, Mar 1978, T. T. Rule, et. *a/.* (Arizona State University). "The Testing of Specially Designed Silicon Solar Cells Under High Sunlight Illumination," *Twelfth IEEE- 1976. pp. 744-750.*

struct photovoltaic cells with useful efficiencies. Efficiencies of 5.5 percent have been measured" and 15 percent efficiency may be possible. 20 The hydrogen apparently attaches to "dangling" silicon bonds, minimizing the losses that would otherwise result at these sites. Acceptable performance is possible, despite the large number of remaining defects, because the amorphous material is an extremely good absorber of light; test cells are typically 1 micron or less in thickness.[21] The properties of this complex material are not well understood.

GaAs or CdS/Cu_2S are also much better absorbers of light than crystalline silicon, so cells made from these materials can be thinner and tolerate smaller crystal grains than was possible with the crystalline silicon. Commercial CdS/Cu_2S cells will probably be 6 to 30 microns thick,[22,23] and the crystal structure produced with a relatively simple spray or vapor deposit process is large enough to prevent grain structure from significantly affecting cell performance.

The primary drawback of most of the "thin film" cells is their low efficiencies. Research is proceeding rapidly in a number of areas, however, and a number of thin film cells may be able to achieve efficiencies greater than 10 percent.

Older designs of cadmium cells degraded and failed relatively rapidly, but accelerated lifetime tests on modern designs appear to indicate that cells hermetically sealed in glass with proper electrical loading could have a useful life of decades.[24,25,26]

Research is also underway on a number of other materials which may be used to manufacture inexpensive thin film cells. Experimental cells have been constructed which substitute iridium phosphide or copper indium selenide for the copper sulfide in the CdS/Cu_2S heterojunction, and efficiencies greater than 10 percent have been demonstrated in single-crystal laboratory cells made with these materials. 2728

It is also possible to convert light energy directly into electricity by exposing electrodes immersed in chemicals to sunlight. if the materials are properly chosen, a current can be produced without any net chemical change in the materials used. Conversion ef-

[19] D E Carlson, RCA Laboratories, "Amorphous Silicon Solar Cells, " *IEEE Transactions on Electron Devices, ED-24(4), 1977,* pp 449-452

[20] _____ and C R Wronski, *App Phys.Lett.* 28, 1976, p 671

[21] A R Moore, *Electron* and Ho/e *Drift Mobility in Amosphous Silicon* (to be published)

[22] Boer, op cit , p 319

[23] J F Jordan, Photon Power, Inc., El Paso, Tex , private communication, February 10, 1977

[24] J. Besson, et al , "Evaluation of CdS Solar Cells as Future Contender for Large Scale E lectricity Production," *The Conference Record of the Eleventh IEEE Photovoltaic* Specialists Conference–1 975, Scottsdale, Ariz , May 6-8, 1975 (Institute of E lectrical and Electronics Engineers), pp 468-475

[25] E W Greenwich and F A Shirland (Westinghouse Research Labs), "Accelerated Life Performance Characteristics of Thin-Film CU_2S *Solar Cells-CdS," Proceedings,* E lectrochemica l Society Solar Energy Symposium, Washington, D C , May 2-7, 1976

"j F Jordan, Photon Power,Inc , private communication, Apr 5, 1976

[27] S Wagner, et al, *Appl. Phys.Lett.,* 26, 229, 1975

[28] J Shay, et al , *Appl. Phys.Lett.,* 27, 89,1975

ficiencies greater than 5 percent have been reported with polycrystalline CdSe-based photoelectrochemical cells.[29 30 31 32 33 34]

CELLS DESIGNED FOR USE IN CONCENTRATED SUNLIGHT

High efficiencies are important for cells used in concentrated sunlight, since increased cell performance means a reduction in the area which must be covered with the magnifying optical equipment, which dominates the system's cost.

Modified silicon cells, designed to perform in concentrated sunlight are not inherently more expensive than ordinary cells, but are always likely to cost more per unit of cell area since production rates will be lower and since more care will be taken in their manufacture. However, since the cells cover only a fraction of the receiving area, much more can be spent on any individual cell. Cells such as the thermophotovoltaic device and the $Ga_xAl_{1-x}As/GaAs$ cells may be considerably more expensive per unit area than the silicon devices, but this cost may not be significant since the devices can be used with concentrations of 500 to 1,000 or more and can be much more efficient. A variety of approaches are being investigated for achieving high-efficiency performance in concentrated sunlight.

Optimizing Conventional Silicon Cells for Use in Concentrated Sunlight

The current from a photovoltaic cell increases almost linearly with increasing sunlight intensity and the voltage increases slightly faster than the logarithm of the intensity. These effects would lead to an increase in overall cell efficiency, except that the increased current densities in the cell lead to increased resistive losses and other effects. The design of standard silicon cells can be optimized for operating in intense sunlight by carefully designing the wires used to draw current from the cells, optimizing the resistivity of the cell material, changing the thickness of the cell junction, and otherwise taking pains in cell manufacture (e.g., better antireflective coatings and surface texturing, higher quality silicon, precisely designed gridlines, etc.). Efficiencies as high as 17.9 have been reported for silicon cells operating at 1000 C in sunlight concentrated 200 times. [35]

Several ingenious techniques have been suggested for improvin, performance of silicon devices used in intense sunlight with novel designs.

Interdigitated Back-Contact Cells

An "interdigitated back-contact" cell exposes an unobstructed wafer of intrinsic (i.e., very pure) silicon crystal directly to the sunlight. The junctions that produce the cell voltages, and that are attached to electrical leads, are entirely on the back of the cell. (The name comes from the shape of the positive and negative electrical contacts on the back side of the cell. See figure X-3.) An efficiency of 15 percent concentration, with ratios up to about *280,* has been reported for a preliminary version of this cell; it is believed that straightforward design improvements will result in cells which are at least 20-percent efficient. "

---

[29] Mark S WrightOn, MIT, private communication, Mar 26, 1977.

30 A. B. Ellis, et al., *J. Amer. Chem. Soc., 98, 1635, 6418, 6855(1 976)*

[31] G. Hodes, et al , *Nature, 216, 403,1976,*

[32] B. Miller and A. Heller, *Nature, 262, 680, 1976.*

[33] D. L. Laser and A. J. Bard, *J. Electrochem. Soc.,* 123, 1027,1976.

[34] K. F Hardee and A J Bard, *J. Electrochem. Soc., 124,* 215,1977

[35] L S Napoli, et al., RCA, "High Level Concentration of Sunlight on Silicon Solar Cells, " *RCA Review,* Vol 38, No 1, March 1977, p 91

[36] M D. Lammert and R. J Schwartz, Purdue University, "The Interdigitated Back Contact Solar Cell: A Silicon Solar Cell for Use in Concentrated Sunlight, " *IEEE* Transactions *on Electron* Devices, ED-24(4), 1977, pp 337-341,

Figure X-3.— An Interdigitated Back Contact Solar Cell and Cross Section

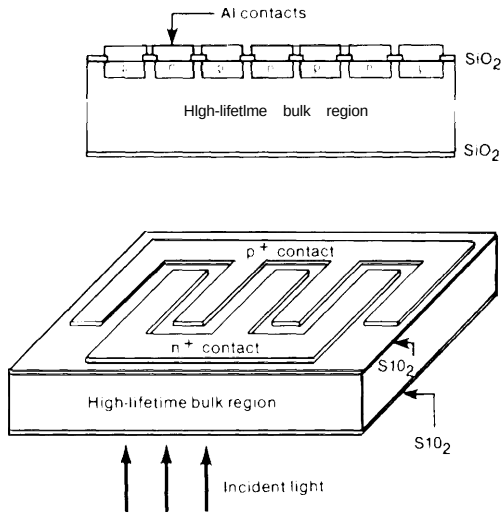

SOURCE
Lammert M D and R J Schwartz "The Interdigitated Back Contact Solar Cell A Si li con Solar Cell for Use in Concentrated Sunlight" *IEEE Transactions on Electron Devices,* VOI ED-24 (1977) p 337

Gallium-Arsenide Cells

Gallium arsenide has a higher theoretical photovoltaic efficiency than **silicon because** its excitation threshold is better matched to the energy in the Sun's spectrum.

CaAs cells can be used to achieve high efficiencies in intense radiation, particularly if they are covered with a layer of $Ga_xAl_{1-x}As$ which has the effect of reducing surface and contact losses. Efficiencies as high as 24.5 percent have been measured for such devices operating in sunlight concentrated 180 times, [38]

In addition, both theory and experiment show that the efficiency of GaAs cells is reduced less by high temperature than is the efficiency of silicon cells.

[37] H Hovel, op cit , p 195

[38] J Harris, et al , Rockwell International, "High Efficiency Al GaAs/G aAs Concentrator Solar Cells, " *The* Conference Record *of the Thirteenth IEEE Photovoltaic Specialists Conference-1978,* Washington, D C , June 1978

The Vertical Multifunction Cell

The edge-illuminated, vertical, multifunction cell shown in figure X-4 consists of a stack of silicon homojunction devices qualitatively similar to standard cells, illuminated in such a way that the light enters the cells parallel to the junctions. Several recent calculations have indicated that these devices have the potential of achieving efficiencies as high as 30 percent, [39] **although very little work has been done on designing and testing optimized cells. The maximum measured efficiency to date is 9.6 percent for a device without an antireflective coating.** [40]

Figure X-4.—The Vertical Multifunction Cell (edge illuminated)

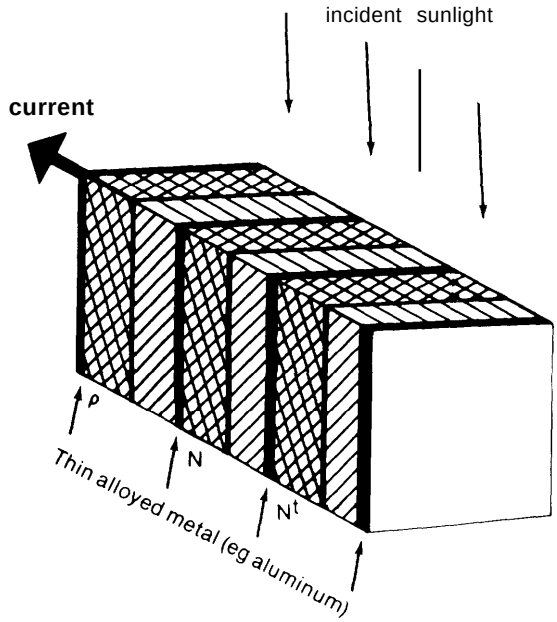

[39] H.J Hovel, IBM, "Novel Materials and Devices for Sunlight Concentrating Systems, " *IBM Journal of Research and Development, 22(2),* March 1978,

[40] T T Rule, et al , Arizona State University, "The Testing of Specially Designed Silicon Solar Cells Under High Sunlight Illumination, " *The Conference* Record *of the Twelfth IEEE Photovoltaic Specialists Conference-1976,* Baton Rouge, La., November 1976, pp 744-750.

The high potential efficiency results from several features of the device:[41 42 43]

- Since the vertical multifunction devices are connected in series, they produce higher voltages and lower currents than other concentrator cells with the same power output. The low currents reduce the resistance losses. Series connections also mean, however, that considerable care must be taken to ensure that all of the cell elements are illuminated since an unilluminated unit will act like a large series resistance.
- Like the interdigitated cell discussed earlier, the vertical multifunction de vices do not require contacts on the surface (the aluminum connections can cover less than 1 percent of the surface area)" and thus front surface reflections are minimized.
- The multifunction device should be able to make more efficient use of light with relatively long and short wavelengths.
- The multifunction devices should be able to perform better than conventional silicon cells at high temperatures, and its performance at high temperatures improves in high light concentrations; the cells should, for example, be only half as sensitive to temperature at 1,000 x suns as they are in unconcentrated sunlight.[45]

The extra manufacturing steps required to fabricate these devices will make them somewhat more expensive than conventional silicon cells, but this difficulty would be offset if the high efficiencies are realized.

Horizontal Multifunction Cells

There have also been proposals for using horizontal multifunction devices using silicon or GaAs. It may be possible to design a cell array capable of producing relatively high voltages on a single chip, thereby reducing the cost of interconnecting devices and reducing series resistance in connections. The inherent efficiencies of these devices are approximately the same as conventional cells, but it may be easier to use the approach to develop practical cells which can more nearly approximate the potential of the materials.[46]

Thermophotovoltaic Cell

The "thermophotovoltaic" cells shown in figure X-5 may be able to achieve efficiencies as high as 30 to 50 percent by making an end-run around the fundamental limits on cell performance discussed earlier. This is accomplished by shifting the spectrum of light reaching the cell to a range where most of the photons are close to the minimum excitation threshold for silicon cells. The Sun's energy is used to heat a thermal mass to 1,800 'C (the effective black body temperature of the Sun is about 5,7000 C). A large fraction of the surface area of this mass radiates energy to a silicon photovoltaic device. (Reradiation to the environment can occur only through the small aperture where the sunlight enters.) A highly reflective surface behind the photovoltaic cell reflects unabsorbed photons back to the radiating mass and their energy is thus preserved in the system .47

---

[41] B. L. Sater and C. Goradia, "The High Intensity Solar Cell –Key to Low Cost Photovoltaic Power, " NASA Technical Memorandum ,NASA TM X-71718, 1975.

[42] C Goradia and B. L. Sater, "A First Order Theory of the P-N-N Edge-1 Illuminated Silicon Solar Cell at Very High Injection Levels," *IEEE Transactions on Electron Devices,* **Vol.** ED-24, 4, p. 342,1977,

[43] H. J. Hovel, IBM, "The Use of Novel Materials and Devices for Solar Concentrating Systems," Proceedings *DOE Photovoltaic Concentrator Systems Workshop,* Scottsdale, Ariz., May 24-26,1977.

[44] 6. L. Sater, "Current Technology Status of the Edge-illuminated Vertical Multifunction (VMJ) Solar Cell, " November 1977 (unpublished),

[45] Goradia and Sater, op. cit., p. 350.

[46] "H. J. Hovel, IBM, "The Use of Novel Materials and Devices for Solar Concentrating Systems," op. cit., p. 38

[47] R. M. Swanson and R. N. Bracewell, *Silicon Photovoltaic Cells in Thermophotovoltaic Conversion,* EPRI ER-478, February 1977.

Figure X-5.— Thermophotovoltaic Converter

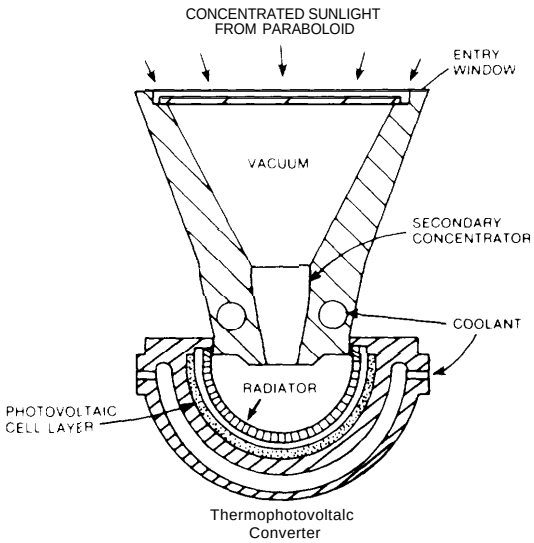

SOURCE
Swanson, R M and R N Bracewell (Stanford University) "Silicon Photovoltaic Cells in Therm ophotovoltaic Conversion" EPRI ER-478 (1977)

Multicolor Cells

Another approach to achieving high cell efficiencies involves the use of a number of different materials to form cells optimally designed for different colors of light. There are two basic approaches: (1) the use of selective mirrors to separate colors and direct them to different cells, and (2) the use of a vertical stack of photovoltaic cells arranged so that upper layers absorb only high energy (i.e. short wavelength) photons, allowing the remaining photons to reach lower cell levels,[48] Little experimental work has been done on these devices, but theoretical analysis has predicted that the light-filter devices could achieve efficiencies as high as 46 percent if two separate cells are used and 52 percent if three cells are used. " Multilayer cells using Ge, Si, GaAs, and other materials with two or more layers may also be able to achieve efficiencies above 40 percent. 50 An ingenious scheme for separating colors has been recently proposed which uses a series of dyes capable of absorbing sunlight and reradiating the energy in a narrow frequency band matched to the band gap of each of a series of cell junctions. [51] 52 A considerable amount of development work will be required to design practical devices, however, and the ultimate cost of fabricating the devices cannot be forecast with any confidence.

[48] H. J Novel, IBM, "The Use of Novel Materials and Devices for Solar Concentrating Systems, " op cit., p 38

[49] N. S Alvi, et al., Arizona State University, "The Potential for Increasing the Efficiency of Photovoltaic Systems by Using Multiple Cell Concepts," Twelfth *IEEE-7976,* opcit., pp. 948-956

[50] J J Loferski, Brown University, "Tandem Photovoltaic Solar Cells and Increased Solar E nergy Conversion Efficiency, " *Twelfth IEEE-1976,* op cit , pp 957-961

[51] A Goetzberger and W Breubel, *Appl. Phys., 14, 1977, p 123.*

[52] The technique was originally suggested for use in connection with scintillation counters in R L Garwin, "The Design of Liquid Scintillation Cells, " Rev. *Sci. Inst.* 23, 755 (1 952); and R L Garwin, "The CO l lection of Light From Scintillation Counters, " *Rev. Sci. Inst. 31,* 1010 (1 960).

CONCENTRATOR SYSTEMS

The contribution of photovoltaic cell costs to the overall cost of an installed photovoltaic system can be greatly reduced if an optical system is used to concentrate sunlight on the cell, even though cells designed for use in concentrators may cost more per unit area of cell surface than flat-plate cells. If such systems are used, problems of reducing cell fabrication costs are replaced with problems of mechanical engineering. In most cases, the energy required to manufacture a concentrator array is many times lower than the energy required to manufacture a flat-plate cell array with a similar area.

The variety of concentrating collectors which can be used with photovoltaic de-

vices is reviewed in chapter XII. Photovoltaic devices can be attached to most types of tracking systems with minimal modifications to the basic collector design. (A two-axis tracking system using Fresnel lenses to focus light on silicon cells is shown in figure X-6.) Attaching a photovoltaic device to a concentrating collector can, however, present some unique design problems:

- One-axis tracking collectors are unable to illuminate the entire receiver surface during most of the day. Thus, only a part of the receiver can actually be covered by cells. In general, it is necessary to connect photovoltaic devices in a receiver in series to achieve acceptable system voltages. Nonilluminated photovoltaic devices have high

Figure X-6.—Experimental Concentrating Photovoltaic Array in Operation. The Array Employs Fresnel Lenses and Silicon Photovoltaic Cells



SOURCE Sandia Laboratories, Albuquerque, N Mex., 1976.

resistance and the output of a string of cells connected in series would be greatly reduced if one element of the string were shaded.

- It is desirable to maintain a relatively uniform illumination on most cells to maximize cell performance. This is difficult to accomplish with most collector designs. It is possible to design cells capable of performing with acceptable efficiencies in the i Illumination patterns of specific Collector designs. This can be done, for example, by modifying the pattern of electric contacts on the front surface of the cell, but the market for such specialized cells would necessarily be limited.

It is difficult to compare the attractiveness of concentrating and nonconcentrating photovoltaic devices because of the large number of variables involved; the only completely satisfactory way of making such a comparison is to conduct a complete life-cycle cost analysis of competing systems operating in realistic environments (such as those reported elsewhere in this study). The following formula, however, can be used to obtain a crude estimate of the cost of a concentrating collector which would be competitive with a flat-plate device (assuming that no credit can be given for the thermal energy which can be produced from the concentration systems):

$$C_c = C_{fp}\eta_{fp}r_e r_s(1 - r_c/C_r) + (C_o/k_1)(r_e r_s - r_o) + C_i(r_e r_s - r_i) + C_m r_e r_s \quad \text{(X-1)}$$

where the variables are defined as follows:

c_c = allowed cost of the concentrating collector, excluding the solar cells ($/m^2)

C_{fp} = cost of flat plate cell array ($/kW)

η_{fp} = the efficiency of the f tat-plate array

r_e = ratio of the efficiency of the concentrator photovoltaic system (including losses in the collector optics) to the efficiency of the flat-plate array (including packing factors)

r_s = ratio of solar energy reaching cells in the tracking collector to the sunlight (direct and diffuse) reaching the flat-plate collector

r_c = ratio of the cost of the concentrating cell ($/kW in one sun) to the cost of a flat-plate cell array

C_i = cost of installing the flat-plate collectors ($/m^2)

r_i = ratio of cost of installing a concentrator to the cost of installing a flat-plate device

C_o = annual cost of maintaining the flat-plate system (cleaning etc.) in $/m^2 of collector

r_o = the ratio of the cost of maintaining the concentrating collector to the cost of maintaining a flat-plate system (per m^2)

k_i = the effective cost of capital

C_m = the cost of flat-plate supporting structures ($/m$_2$)

C_r = concentration ratio of collector

This formula has been used to construct the curves shown in figure x-7.

Figure X-7.— Breakeven Costs for Concentrating Photovoltaic Collectors Compared With Flat. Plate Devices

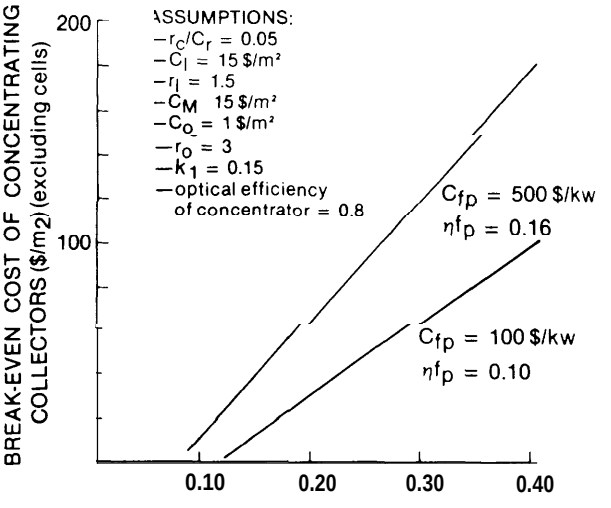

Assuming that concentrating systems cost so percent more than flat-plate arrays to install and three times as much to operate on an annual basis, concentrator systems would be competitive with $500/kW—15 percent efficient flat-plate arrays if the concentrating collector costs about $70/m^2 and concentrating cells are 20-percent efficient. The concentrator could cost about $180/m^2 if concentrating cells are 40-percent efficient. (This example assumes that the optical efficiency of the concentrators is 80 percent and the concentration ratio is at least 10 times the ratio between concentrator cell costs and the cost of flat-plate arrays.) The allowed cost of concentrators will be considerably larger if there is a useful application for the thermal energy available from an active cooling system.

While the cost of mounting cells on tracking collectors is clearly a major concern, there is also cause for concern about the cost of mounting flat-plate arrays. If array prices fall below $300 to $500/kW, the cost of supporting and installing the arrays could begin to exceed the cost of the arrays themselves.

General Electric has proposed a design for a photovoltaic shingle which may be able to substitute for a building roofing material. If costs reach $100 to $300/kW, it may also be economical to use photovoltaic sheets as a part of a wall surface. In most locations in the United States, the output of a collector mounted vertically on a south-, east-, or west-facing wall is 40 to 60 percent lower than the output of a collector fixed at an optimum orientation.

PHOTOVOLTAIC COG EN ERATION

The analysis thus far has considered only the electric output of collector systems, but the attractiveness of photovoltaic devices can be increased significantly if effective use can be made of the thermal energy carried away by water pumped over the back surfaces of collecting cells. Such systems are the photovoltaic analogs of cogeneration devices, and an analysis of the opportunities presented by such devices is much the same as those conducted for conventional systems. In both cases, the net efficiency of systems can only be understood by examining the combined demands for electricity and thermal energy in each proposed situation. There are clearly many useful applications for the thermal energy with temperatures in the 500 to 100'C range which can easily be extracted from most photovoltaic cogeneration devices. About 23 to 28 percent of the primary energy consumed in the United States is used at temperatures below 108 °C.[53]

[53] Battelle Columbus Laboratories, *Survey of the Applications of Solar Thermal Energy Systems to Industrial Process Heat.*

With photovoltaic systems, the critical question is whether the electric-generating efficiency which is lost because of operating the cells at higher temperatures is compensated by the value of the thermal energy produced. Cell performance degrades almost linearly with temperature at temperatures of interest primarily because of a drop in the operating voltage of the cell (at high temperatures, thermally excited electrons begin to dominate the electrical properties of the semiconductor device). This temperature dependence is commonly expressed in the following form:

$$\eta(T) = \eta(28)(1 - \beta[T - 28]) \qquad (X\text{-}2)$$

where n (T) is the efficiency of a cell at temperature T (expressed in "C) and β is the temperature coefficient. The temperature coefficient (β) measured for a number of different cells is illustrated in table X-3. It can be shown in most cases that if a use for low-temperature thermal energy exists, it is preferable to accept these losses of efficiency and use the thermal output from cells directly rather than to maximize cell performance

Table X-3.—Temperature Dependence of Photovoltaic Devices

Material	Cell efficiency at 28° C(%)	Base resistivity (Ω-cm)	Concentrate ion ratio C_r	ß= temperature coef - ficient	
Silicon	**10.4**	0.1	1	**0.0035**	Sandia cell
Silicon	**11.8**	**0.3**	1	**0.0035**	Sandia cell
Silicon	**12.4**	**0.3**	**40**	**0.0032**	Sandia cell
Silicon	12.2	**2.0**	1	**0.0040**	Commercial cell
Silicon	11.8	**10.0**	1	**0.0046**	Commercial cell
GaAs	17.0		1	**0.0022**	Varian
GaAs	19.2		**100**	**0.0023**	Varian
GaAs	18.5		**1000**	**0.0021**	Varian
CdS	7.8		1	**0.004-0.005**	Univ. of Delaware

SOURCES Silicon cell data from Edward Burgess, Sandia Laboratories, private communication.
GaAs data from L James, Varian private communication
CdS data from John Meakin, Institute of Energy Conversion, University of Delaware (private communication)

and attempt to use a photovoltaic-powered heat pump to produce thermal energy,

GaAs and other high-efficiency cells are less affected by high temperature operation than are silicon devices .54 A commercial silicon cell operating with an efficiency of 12 percent at 270 C has an efficiency of only 8 percent if operated at 1000 °C[55], while a GaAs cell with an efficiency of 18.5 percent at 280 C can operate with 16-percent efficiency at 1000 C and about 12-percent efficiency at 2000 °C.[56]

It is possible to operate flat-plate collectors at elevated temperatures, but cogeneration will probably be easier to justify for concentrating systems. Care must be taken to cool concentrator cells even if waste heat is not employed. If photovoltaic cogeneration proves to be attractive, concentrator photovoltaic systems may continue to be economically attractive even if the price goals for flat-plate arrays are achieved.

[54] H J Hovel, IBM, *Semiconductors and Semimetals,* op cit , p 168

[55] E L Burgess and J G Fossum, Sandia Laboratories, Albuquerque, "Performance of n + -p Silicon Solar Cells in Concentrated Sunlight, " *IEEE Transactions on Electron Devices,* E D-24(4), 1977, p. 436

[56] L. James, Varian Corp , private communication, 1977,

THE CREDIBILITY OF THE COST GOALS

The most satisfactory technique for anticipating the future cost of photovottaic devices would be to anticipate future manufacturing techniques and develop a precise cost estimate for each processing step; this approach is taken in the next section. Unfortunately, the results of such analyses are inconclusive since many future manufacturing processes capable of dramatic cost reductions are based on techniques which are now only laboratory procedures or which anticipate progress in research. It is possible, however, to make some estimates of potential cost reduction by examining the history of cost reductions achieved in similar types of manufacturing.

A common statistical technique for analyzing the history of cost reductions is called the "learning-curve" technique.[57] This technique attempts to correlate the price of a product with the cumulative production experience of the industry manufacturing the product. In many cases, a rough correlation appears to exist, although the rate at which prices decrease varies greatly from one industry to another. The rate of "learning" is quantified by determining how much the price decreases when the cumulative production volume doubles: if a doubling of accumulated volume results in a price decrease of 10 percent, the system is said to be on a "90-percent learning-curve;" if a doubling of production volume results in a price decrease of 30 percent, the system is said to be on a "70-percent learn i rig-c urve."

The most obvious place to look for a historical analogy for predicting the price reductions possible in photovoltaic devices is the semiconductor industry which produces silicon devices using many of the techniques now used to construct silicon photovoltaic devices. The history of prices in the transistor and silicon diode industries is illustrated in figure X-8. The results are difficult to interpret since the price reductions clearly do not follow a simple linear learning curve, but they do indicate that a learning curve of 70 percent is not impossible. The analogy is far from perfect, of course, since miniaturization techniques which were used effectively to reduce the price of semiconductor electronics cannot be used in the manufacture of photovoltaic devices; the size of photovoltaic devices used in flat-plate arrays cannot be reduced since power produced by a unit area of photovoltaic surface is limited by the intensity of sunlight on the Earth's surface. The learning-curve method is probably valid for making crude estimates of future cell prices since learning curves of 70 to 90 percent have been observed for most products, even when miniaturization is not used in the manufacturing process.

[57] "Boston Consulting Group, *Perspectives on Experience, 1971.*

MARKETS

The learning curve cannot be used to estimate the rate at which prices will fall without information about the size of the market at each future price. Unlike most other power sources, the demand for photovoltaic devices exists at a large range of prices, since the equipment can provide power in remote areas where conventional alternatives are extremely expensive. The unique features of the equipment may lead to the discovery of markets for energy where no market now exists. The large elasticity of markets, coupled with the fact that individual installations can be very small, has allowed an evolutionary growth in sales and a gradual reduction in cell prices,

The free-world market for cells at 1976 prices was about 380 kW[58] of which about 280 kW were sold by U.S. manufacturers. U.S. Government purchases during this period were about 108 kW, of which about 50 kW were used in satellites.[59] Major commercial markets have appeared in communications equipment (68 kW), corrosion protection for bridges, pipelines and like applications (28 kW), and aids to navigation (20 kW).[60] Sales during 1977 were expected to be about twice 1976 levels.

Several market surveys for photovoltaic equipment have been completed during the past several years, and some of these are summarized in table X-4. The considerable differences in the forecasts reflect differing judgments about the future cost of conventional energy and other forms of solar energy, about the rate at which an industrial infrastructure capable of supporting large-scale production can be established, and about the potential costs of support equipment (storage, controls, etc.) and installa-

[58] BDM **Corporation,** *Characterization of the Present Worldwide Photovoltaics Power Systems Market,* May **1977, p. 1-1.**

[59] Intertechnology Corporation, *Photo voltaic power Systems Market /identification and Analysis,* **Aug. 23, 1977.**

[60] Intertechnology **Corporation, op. cit.**

Figure X-8.— Boston Consulting Groups' Learning Curve

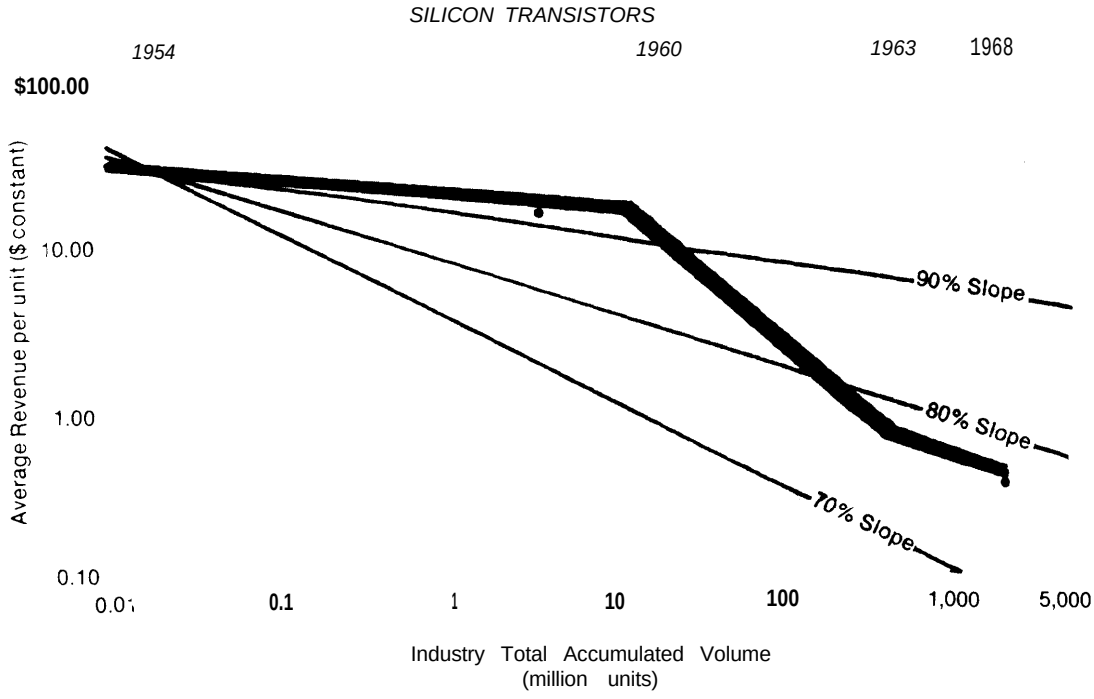

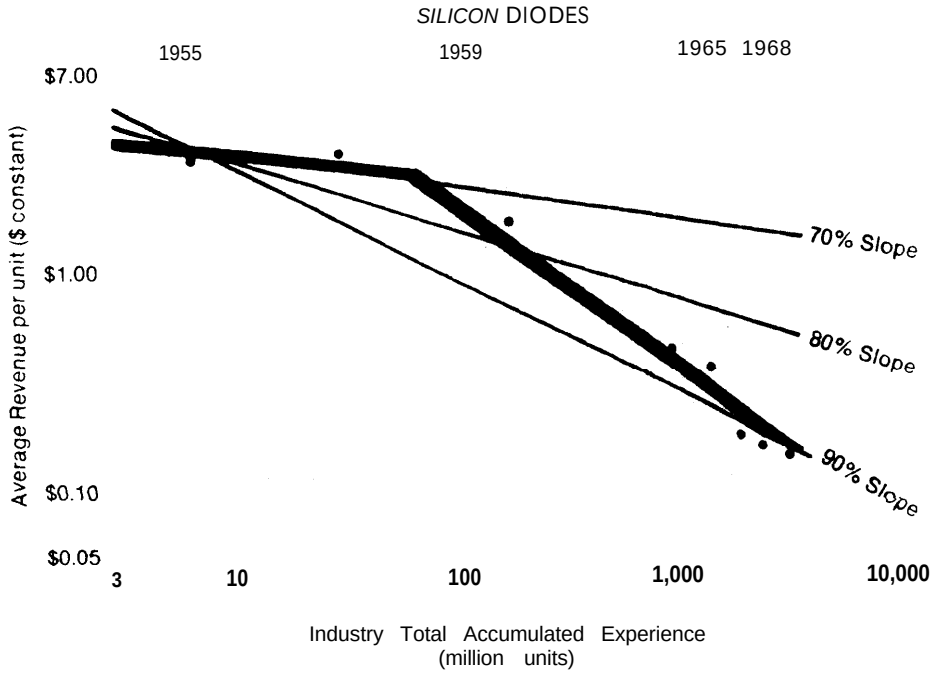

Table X-4.– Market Forecasts for Photovoltaic Devices at Different Prices [in megawatts of annual sales]

Marketing study	Array prices in dollars per peak watt				
	10	3	1	0.5	0.1-0.3
1. BDM/FEA					
DOD market	10	75	100	—	—
Worldwide commercial market	1.5	20	70	100	—
2. Intertechnology Corporation	0.5	13	126	270	—
3. Motorola	1.5	20-30	—	—	—
4. Texas Instruments	0.4	2.6	30	100	20,000
5. RCA	0.8	13	200	2,000	100,000
6. Westinghouse	—		—	—	96,000
DOE planning, objectives	1.0	8	75	500	5,000

SOURCES ERDA briefing on the "Photovoltaics Program," Sept 9, 1977.

BDM Corporation, "Characteristics of the Present Worldwide Photovoltaic Power Systems Market," May 1977, p 1-1

Intertechnology Corporation, "Photovoltaic Power Systems Market Identification and Analyses," Aug 23, 1977

BDM Corporation, *DOD Photovoltaic Energy Conversion Systems Market Inventory and Analysis, Summary Volume,* p 17.

P D Maycock and G F Wakefield (Texas Instruments) "Business Analysis of Solar Photovoltaic Energy Conversion," *The Conference Record of the Eleventh IEEE Photovoltaic Specialists Conference. 1975* Scottsdale, Ariz May 1975, pp 252.255

The Motorola Corporation

tion. Some manufacturers, for example, have been skeptical about the high forecasts for small remote applications since many of these applications require a considerable amount of expensive marketing and engineering.

The surveys seem to agree that a significant fraction of sales during the next few years will occur in developing countries. Photovoltaic equipment is ideally suited to places where no utility grid is available and where labor for installing the equipment is relatively inexpensive. Consumers in the capital cities of many developing nations now pay as much as $0.20 to $0.25/kWh for electricity, and prices in more remote areas are often higher (if power is available at all).[61] The modular nature of photovoltaic equipment has the additional advantage of allowing functioning power sources to be installed quickly and in sizes appropriate for each application. Moreover, an investment in the photovoltaic power source does not commit a nation to finding a reliable source of fuel or to maintaining a highly trained group of operators—two serious problems for developing countries,

Other possible areas where sales of photovoltaic equipment may increase rapidly during the next few years include applications by the U.S. Department of Defense (large, cost-effective purchases appear possible during the next few years)[62] and the armed forces of other nations; the agricultural sector, for irrigation and other pumping ap-

[61] Telegrams received from A I.D from posts in numerous developing nations during July and August 1977 in response to a request for information about local utility rates

[62] BDM Corporation, *DOD Photovoltaic Energy Conversion Systems Market Inventory and Analysis, Summary Volume,* p. 17

placations; and the transportation industry, for highway markers and lighting. [63 64]

If prices fall below about $0.50/watt, an explosive growth in sales could occur since at this price photovoltaic equipment might provide electricity which is competitive with residential and commercial electricity rates in many parts of the United States. [65 66] By the time prices fall to $0.10 to $0.30/kW, the photovoltaic electricity may be competitive with electricity sold at bulk rates to large industrial consumers. Estimating sales at these levels is extremely speculative since generating large amounts of power from photovoltaic devices would require a fundamental change in the ways in which the Nation now supplies and consumes electric energy. Moreover, when array prices reach these low levels, the overall cost and attractiveness of photovoltaic systems are likely to be dominated by factors other than the cost of the cells themselves. Before turning to an analysis of integrated systems, however, it will be useful to examine the costs and capabilities of the assortment of photovoltaic devices which are or may be available in the near future.

Each of the projections of markets can be used to predict the rate at which prices fall given an assumed rate of "learning." Three forecasts and three different learning curves have been used to construct the forecasts shown in figure X-9. It can be seen that with the RCA estimate of markets and a 70-percent learning curve, the technique predicts that prices will reach $500/kW in 1986. If prices fall according to a 75-percent learning curve, however, the price will not reach $500/kW until after 1990. Using the less optimistic Texas Instruments (TI) estimates of markets, prices would not fall to $1,000/kW until nearly 1990, even with the 70-percent learning curve,

Figure X-9. -Photovoltaic Array Prices for Several Market Projections

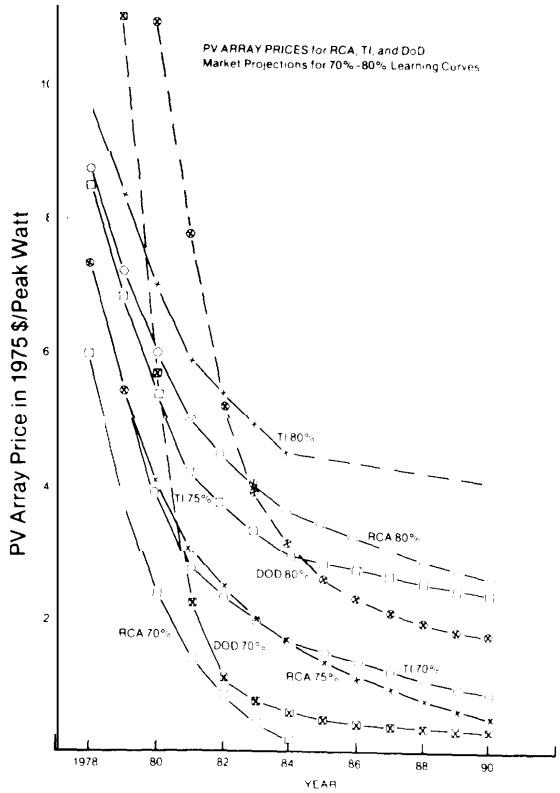

NOTE: With the exception Of the "DOD sales" curves, it has been assumed that the Federal Government spends $129 million for photovoltaic systems between 1978 and 1981, of which 40 percent is actually used to purchase cell arrays (the remainder being spent for design, installation, storage, control systems, and other supporting devices) The forecasts assume that cumulative production of cells through 1975 was 500 kW and that average array prices at the end of 1975 were $15/Watt

The figure also illustrates the extreme sensitivity of the forecast of potential price reductions to the assumptions made about intermediate markets. If the BDM Corporation forecasts of potential cost-effective military applications are correct and the military purchases devices for all cost-effective applications, prices can fall to $500/kW by 1986, even if a 75-percent learning curve is assumed.

If the cost of photovoltaic devices is to be reduced through an expansion of the market, the industry will have to grow extremely rapidly for the cost goals to be met. For example, if prices follow a 70-percent learning curve, the cost goals can be met if the pro-

[63] Intertechnology Corporation, op. cit.

[64] BDM Corporation, *Photovoltaic Market,* op cit.

[65] Westinghouse Corporation, *Final Report: Conceptual Design and Systems Analysis of Photovoltaic Power Systems, Volume I, Executive* Summary, April 1977, p 45

[66] See volume I I of this study

duction rate of cells doubles each year. (The times required to achieve different price reductions, given a learning curve and production doubling time, are summarized in table X-5.) Such expansions are possible but they could make it difficult for small companies now manufacturing cells to expand fast enough to meet demands.

[n spite of its limitations, the learning-curve technique can provide some useful guidance by establishing whether the cost goals anticipated for photovoltaic devices exceed any historic rates (the goals are optimistic, but not impossible by this test), and they can be used to explore the sensitivity of price reductions to different forecasts of potential markets.

AN ANALYSIS OF MANUFACTURING COSTS

Silicon

The vast majority of the photovoltaic cells now being sold are single-crystal silicon cells in flat arrays. (See figure X-1 O.) The bulk of Federal funding to reduce the cost of cells is being directed to silicon technology. The Federal Low-Cost Silicon Solar Array (LSSA) project, managed by the Jet Propulsion Laboratory (jPL) has made a careful analysis of the component costs of each step in the manufacturing process and is

Table X-5.— Years To Achieve Indicated Price Reduction as a Function of Learning Curve and Assumed Growth in Demand

Price reduction (P_o/ P)	Learning curve (percent)	Number of times production rates double each year			
		4	2	1	1/2
30	70	3.0	5.5	10.0	18.0
	75	3.6	6.6	12.3	22.6
	80	4.4	8.4	15.7	29.4
50	**70**	**3.4**	**6.2**	**11.4**	**20.9**
	75	**4.0**	**7.5**	**14.1**	**26.1**
	80	**5.0**	**9.5**	**18.0**	**34.0**
100	70	3.8	7.2	13.4	24.7
	75	4.6	8.7	16.5	30.9
	80	*5.8*	11.0	21.1	40.2
150	70	4.1	7.8	14.5	27.0
	75	5.0	9.4	17.9	33.7
	80	6.2	11.9	22.9	43.8

Assumptions: Price in 1976 = P_O = $15,000/kWe[a]
Cumulative sales volume in 1976 = S_o = 500 kwe[b]
Annual sales in 1976 = B = 250 (kWe)[c]
= t_o = 1976 (base date)

[a] J.W. Yerkes, (ARCO Solar, Inc.) Private Communication
[b] J. Lindmeyer, (Solarex Corp.) Private Communication.
[c] A. Clifford, (Solarex Corp.) Private Communication, Oct 1976
SOURCE" Prepared by OTA

Figure X-10.— Commercial Silicon Photovoltaic Cells

Silicon Concentrator Photovoltaic Cells

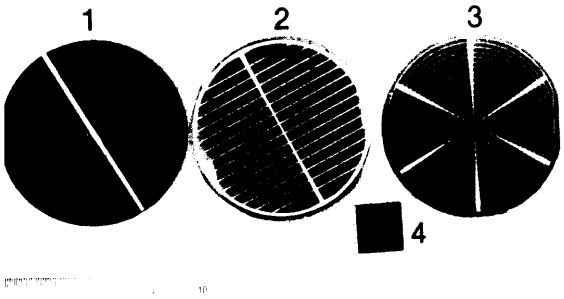

Commercial Silicon Photovoltaic Cells

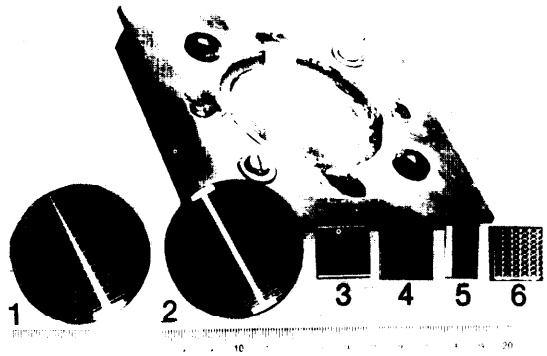

Scale in Centimeters

Photos John Furber, OTA

Manufacturer:
1. Solarex.
2. Arco Solar (Printed contacts)
3. Motorola.
4, Optical Coatings Laboratory, Inc.
(Space Cell Utilized In Sat elites)

Manufacturer:
1-4. Spectrolab.
5. Sandia Laboratories,
6. Solarex.

systematically examining techniques for reducing costs in four major areas.

- **Production of the pure silicon feedstock,**
- **Preparation of a thin sheet of silicon,**
- **Fabrication of cells, and**
- **Arrangement of the cells in a weatherproof array.**

JPL objectives for cost reductions in each area are shown in table X-6. I n reaching these goals, maintaining high cell efficiency will be critically important since many costs in cell manufacture and in the installation of photovoltaic arrays are proportional to overall cell area and not to power.

SILICON PURIFICATION

The purified polycrystalline silicon used as the raw material of commercial cell manufacture now costs about $65/kg. The jet Propulsion Laboratory estimated that, if the goal of $0.50/watt is to be reached, the silicon material cost must be reduced to about $1 O/kg and the amount of silicon wasted in the manufacturing process considerably reduced. [b7] Perhaps even more importantly, current techniques for manufacturing silicon are extremely inefficient in their use of energy; approximately 7,000 kWh of energy is required to manufacture a cell with a peak output of 1kW (assuming that cells are 100 microns thick and 82 percent of the silicon entering the manufacturing process is wasted). [68] This means that the device must operate in an average climate for about 4 years before it produces as much energy as was consumed in manufacturing the component silicon.

Several promising techniques for improving the purification have been experimentally verified, and it should be possible to

[67] H Macomber, J PL, *Proceedings, ERDA Semi-a nnual Solar Photo voltaic Program Review Meeting, Silicon* Technology Programs Branch, San Diego, Calif , January 1977, p 68.

[68] L P Hunt, Dow Corning Corp , "Total Energy Use in the Production of S i l icon Solar Cel ls From Raw Materials to Finished Product, " *Twelfth* IEEE-1976, op. cit `, pp 347-352

Table X-6.—The Distribution of Costs in the Manufacture of silicon Photovoltaic Devices Using Contemporary Technology [aii costs in $/peak W]

	Ingot technology				Non ingot technology	
	Representative data for 1976	1978	1980	1982	1984	1986
Polysilicon	2.01	1.16	.76	.28	.14	.06
Crystal growth and cutting	4.18	2.50	1.43	.67	.23	.10
Cell fabrication	5.97	1.87	1.01	.58	.34	.19
Encapsulation materials	.78	.22	.12	.09	.07	.03
Module assembly and encapsulating	3.99	1.25	.68	.38	.22	.12
Price	16.96					
Goal	20.00	7,00	4.00	2.00	1.00	50

'Does not Include Inflation— prices in 1975 constant dollars

NOTE The detailed price goal allocations are for siliconingot technology up through 1982 and for silicon sheet Technology in 1984 dnd 1986 These al local Ions for use w ilh in the LSSA Project are subject to rev isionas better knowledge is gai ned and s hou ld not be construedas predicted prices

It is ex pec ted t hat after 1982, ingot and sheet tec h nology mod u les w I l be cost corn petit i ve, w ith the poss I bil it y that the $ 50/W goal r an be achieved by e lt her technology Technology developments and future product ion c ost parameters w i l 1 be major factors in determ in ing the most cost effective desig ns

SOURCE Jet Propulsion Laboratory Low Cost Silic on Solar Array Project Received by OTA June 1977

develop cell arrays capable of producing all the energy used in their manufacture in 3 to 4 months. " A significant amount of chemical engineering and process development is needed, however, to demonstrate that these laboratory experiments can be scaled-up by many orders of magnitude to form the basis of a commercial faciltiy.

It is possible to produce photovoltaic cells with silicon less pure than the "semiconductor grade" material now used in cell manufacture, but a careful analysis must be made to determine whether the lower silicon costs would compensate for the additional system costs which would be incurred by the reduced cell efficiency which results. Manufacturing very high efficiency cells for use in concentrators may even require silicon which is of higher purity than the material now used to produce most semiconductors.

Silicon costs probably represent the single greatest technical barrier to meeting JPL's cost goals for nonconcentrating arrays in the early 1980's. This is because construction of plants capable of manufacturing silicon in quantities large enough to achieve the required cost reductions would need to be established very quickly— probably within the next year — and the investments required will be large, compared to previous spending in photovoltaic manufacturing New silicon plants are likely to require more capital investment per unit of cell production than any other stage in the cell production process — between $20 million and $40 million for a single plant. There is no incentive to invest in such equipment of this magnitude solely for the purpose of selling sit icon to the semiconductor industry because material costs for these devices are already a small part of the device cost. Silicon prices, therefore, are unlikely to fall by 1982 unless the Government takes some action.

Improved sawing techniques may be able to cut silicon material requirements by two-thirds by producing thinner silicon cells and reducing the material lost as sawdust. 70 Im-

[69] Hunt, *ibid.*

[70] A Kran, IBM, *Proceeding, Symposium on the Materials Sciences Aspect of Thin Film Systems for Solar Energy Conversion,* Tuscon, Ariz , May 20-22, 1974

proving the techniques used to grow crystals could also reduce losses. Development of a ribbon or thin-film, crystal-growing process could greatly reduce wastage. Development of an amorphous silicon cell with adequate performance would dramatically reduce silicon requirements in cells since these cells would probably require less than 1 percent of the silicon used in commercial cells, Silicon requirements can also be greatly reduced if concentrator devices are used.

FORMATION OF SILICON SHEETS

Growing pure silicon crystals and sawing them into thin waters now represents about 25 percent of the price of arrays. 7. A number of active programs exist for improving the batch processes in which crystal ingots are currently being produced and sawed into wafers [72] techniques have also been designed for drawing single-crystal sheets or ribbons directly from molten silicon, but a considerable amount of engineering work must be done before a commercial process if available. Development of an Ingot technique adequate to meet the $1 to $2 per watt cost goal appears to be assured, and improved ingot techniques may even be adequate to meet the 1986 cost goal. The problems remainlng in this technology appear to be largely ones of improving mechanical designs, this is another area where the program could be accelerated by the Government Although crystal growing equipment is relatively expensive, unsubsidlzed commercial Interest in this kind of equipment In the next few years is likely to be greater than commercial interest in advanced silicon refinement processes. Research progress which makes it possible to use polycrystalline or amorphous materials would substantially reduce the cost of this step In production

[71] "Low-Cost Silicon Sol at Array Project," *Quarterly Report-2,* July-September 1976, pp 1-4

[72] Jet Propulyion Laboratory, *Low-Cost* $//icon *Solar Array Project, Report-2, July-* September 1976, pp 4-57

[74] M~comber, JPl, op cit, p 71

Crystal Growing and Slicing

Ali of the silicon photovoltaic devices now sold are manufactured from wafers sawn from single-crystal *boules* (2- to 3-inch diameter cylinders of silicon). These wafers represented about 35 percent of the cost of photovoltaic arrays in 1976 (see table X-6) The crystals are commonly grown by dip ping a seed crystal into a silicon melt in a quartz crucible which is a few degrees above silicon's melting point and by slowly withdrawing the growing cyrstal from the melt. The crucible and the crystal are counter-rotated to grow a straight crystal of uniform, circular cross-section The crystal is pulled from the crucible until most of the molten silicon has been withdrawn and removed from the melt. The entire apparatus is then allowed to cool so that the crystal can be taken out of the airtight chamber, As the remaining molten silicon solidifies in the crucible, the crucible usually breaks, adding about $50 to the cost of the boule This procedure is called the "Czochralskl " (Cz) or "Teal-Little" method. The boule is sawed into thin wafers which are sent to the next stage of the cell fabrication process. Several commercial silicon cells manufactured using this technique are shown in figure X-10. A variety of new concepts have been proposed for reducing the cost of the crystal-growlng processes, some involve radically new approaches where thin tilms or ribbons are solifified directly from the molten silicon.

- Ireproved sawing techniques might reduce the material lost in the sawing process; currently, nearly 50 percent of the crystal grown is lost as silicon sawdust. " Techniques are being developed which use multiple saws wlth thin saw blades, sawing wires, and other advanced processes to decrease the material lost In sawing and increase the number of silicon wafers produced from a single crystal by producing thinner wafers. [74] [75]

"Texas Instruments, I nc , and Varian have E RDA contracts to Improve sawing techniques See R G Forney, et al J PL, op cit

[75] *LSSA Quarter/v* Report, op cit , pp 4-117, 4-115

- The molten silicon in the quartz crucible from which the crystal boule is withdrawn can be continuously replenished, leading to longer crystal draws and a lower requirement for crucibles. (This process could also save a number of processing steps.)
- The silicon material lost in sawing could be recycled for further use if it is not contaminated in the cutting process.
- Techniques can be used to increase the diameter of the crystals grown by using the standard Czochralski process. Crystals now in use are typically 3 inches in diameter, but crystals 10 inches in diameter have been grown in laboratories. An experiment is now underway to grow three 12-inch diameter crystals in one continuous heating cycle. 77 Choice of an optimum diameter will depend on a detailed study of the manufacturing process. (Problems in cutting the crystals increase with crystal diameter.)
- The rate of crystal growth can be increased if columnar grains can be tolerated in cell wafers (research is required to determine the extent to which such grains can be tolerated or their effects minimized).
- Considerable energy and capital equipment could be saved if a process could be developed for growing a crystal in a mold. The Crystal Systems Company is currently examining a concept in which a seed crystal is placed in one end of an insulated mold filled with molten silicon. A temperature gradient is maintained along the mold so that the crystal grows from the end with the seed crystal to fill the mold. 78 This technique is commonly used to grow metal crystals, but has not yet been successfully adapted to the growth of semiconductor-grade silicon crystals.
- improvements in cutting circular wafers into the hexagons required for close packing are possible through the use of a laser-slicing technique being developed by Texas Instruments.

Table X-6 indicates that if current techniques are converted to mass production, silicon wafer blanks can be produced for about $112/m_2$ ($0.80/watt if the cell is 14-percent efficient) if polycrystalline material were purchased for $35/kg. This could be reduced to approximately $78/m^2$ if polycrystal line material were purchased for $10/kg. A recent analysis conducted for DOE by Texas Instruments estimated that it would be possible to produce "solar-grade" polycrystalline silicon for $10/kg (or $214/kW at 14 percent efficiency),[79] and for approximately $5/kg if arrays are to be manufactured for $1 ()()/k W. 80

Single Crystal Growth—Ribbons and Sheets

Research has been underway for at least 15 years to develop a process by which single-crystal silicon can be produced in the form of ribbons or sheets. Thin ribbons would be appropriate for use in solar cells without the crystal-slicing steps required for boules. This would eliminate the costs involved in slicing the crystals and could make more efficient use of silicon. This would not only eliminate expensive operating steps, but could reduce trimming losses when cutting round cells to hexagonal cells. The Department of Energy has been funding Mobil-Tyco, Solar Energy Corp., IBM, Motorola, RCA, the University of South Carolina, and Westinghouse to assess the merits of a variety of processes for growing single-crystal ribbons and sheets. [81]

One technique for doing this is the "edge-defined, film-fed growth" process (EFG);

[76] M. Goldes (President of SunWind Ltd), private communication, Aug 16, 1976

[77] R G Forney, et al , J PL, op cit

[78] R GForney, et al , JPL, op cit.

[79] Ibid.

[80] Ibid

[81] E RDA, *Semiannual National Yolar Photovoltage Program Review Meeting,* University of Maine, August 1976

work began on this process about a decade ago. The EFG process utilizes a graphite die on top of a crucible of molten silicon. A narrow pool of molten silicon forms on the top of the die by capillary action. A thin ribbon of silicon is slowly withdrawn from this pool.[82] Such a ribbon is shown in the growth process in figure X-11. Photovoltaic cells made from EFG ribbons have shown efficiencies as high as 10 percent.[83] Intensive work is proceeding on the EFC process but several difficulties remain: 1) contain i nation

[82]B Chalmers, "The Photovoltaic Generation of Electricity," Scientific *American,* November 1976, p 34

[83]K. Ravi, et al., 12th *IEEE Photovoltaic Specialists* Conference, Baton Rouge, La., Nov. 15,1976

Figure X-1 1.—Silicon Ribbon Being Grown by the "Edge-Defined Film. Fed Growth" Process



(Mobil Tyco Solar Energy Corp)

of the ribbon by impurities from the die results in efficiencies lower than other silicon cells; 2) the graphite die is attacked by the molten silicon; and 3) the process is currently quite slow. Ribbons 2- to 21A-cm wide can now be grown at rates of 2 to 7 cm per minute. The objective is a growth rate of approximately 18 cm. per minute. [a'] A recent analysis by IBM indicated that a large-diameter Czochralski boule can grow silicon crystal areas at a rate equivalent to 20 to 40 simultaneously pulled ribbons .85

Other ribbon techniques under investigation include the IBM "Capillary Action Shaping Technique" (CAST) which uses a wetted die, and the RCA "inverted stepanov" technique which uses a nonwetted die. Both techniques share many of the problems of the EFG approach. [a']

Another process for manufacturing ribbons is the web-dendrite crystal growth process. Unlike EFG, this process requires no die, and the die contamination and die erosion problems are, therefore, avoided. Strips of silicon 2 meters long, 0.15mm thick, and 22mm wide have been grown at rates of 2 to 3 cm per minute; the objective is a growth rate of 18 cm per minute.[87] Difficulties which remain with this process include: 1) the fact that careful temperature control is necessary, which probably precludes the simultaneous growth of several ribbons from one melt; and 2) relatively slow growth rates.

Polycrystalline Sheets

Work is also underway to develop low-cost techniques for producing sheets of polycrystalline silicon with crystal grains large enough in size and oriented properly to allow the production of cells with acceptable efficiencies. Some processes are yielding individual crystal grains 1 to 10 mm on a side, blurring the distinction between single and polycrystalline devices. Perfection of such processes could lead to more efficient use of the silicon feedstock and replaces the expensive task of growing a perfect crystal with a casting, forming, or depositing process which may be much less expensive. Some of the methods proposed would create a thin layer of polycrystalline material on a solid backing, or substrate, thus eliminating the cost and material waste associated with slicing the silicon material into wafers. Concepts include:

1. Dipping a substrate into molten silicon, covering the substrate with a thin coating of polycrystalline silicon. (Honeywell).
2. Continuously pulling a thin sheet of silicon from the surface of a pool of molten metal where silicon vapor is being deposited. (General Electric).
3 Depositing silicon from a silicon-halide gas directly onto a hot substrate. It may be possible to combine the final stage of silicon purification (distillation) with this deposition process (Rockwell international and Southern Methodist University).
4 Forming heated silicon material under pressure in rollers (University of Pennsylvania).
5 Casting blocks of poiycrystalline material and slicing the blocks (Crystal Systems, Salem, Mass.).

CELL FABRICATION

The process of converting silicon wafers into an operating photovoltaic array with 1 kW peak output involves a number of individual steps which now require many hours of hand labor,[88] adding about $6 to the price

[84] Ibid

"5^Kran (1 BM), "Single-Sillcon Crystal Growth by Czochralski and Ribbon Techniques–A Comparison of C a pa bi l i t ies," *Proceedings, S ympos I um on the Material Sciences Aspect of Thin Film Systems for Solar Energy Conversion,* Tuscon, Ariz , May 20-22, 1974, pp 422-430

[a'] "Low-Cost Silicon Solar Array Project, " *Quarterly* Report-1, July-September 1976, p 4-57

[87] Ibid

[88] P D. Maycock and G F Wakefield, Texas Instruments, "Business Analysis of Solar Photovoltaic Energy Conversion, " *Eleventh IEEE-7975,* pp 252-255

of a 1 watt cell. Processes include the creation of the photovoltaic junction, the addition of electrical contacts, and the application of anti-reflective coatings.[89] Studies of mass-production techniques conducted for JPL by Motorola, Texas Instruments, and RCA all indicate that this cost could be reduced to $0.30 to $0.90/watt[90] using known mass-production apparatus, if plants capable of producing about 5 to 50 MW annually were constructed. The costs associated with each step in the fabricating process are shown in table X-7. Projecting further price reductions, however, requires a fair amount of optimism. It can be seen from table X-4, however, that cell prices must fall to $1 to $2/watt before there will be markets large enough to support several competing fabricating plants of the size envisioned in the JPL studies. It is likely that manufacturers will show greater desire to invest in fabrication equipment than in the more capital-intensive devices required to manufacture silicon wafers. This is because significant cost reductions can be accomplished with plants much smaller than 50 MW/year, and it is much less likely that fabricating plants would become obsolete–even if breakthroughs dramatically reduce the cost of manufacturing silicon wafers.

The laborious and expensive processes for making photovoltaic cells are also extremely inefficient in their use of energy. Silicon material, for example, is melted when it is purified, cooled, and shipped to the crystal-growing facility where it must be melted again to grow a crystal, again cooled, heated at least once more during cell fabrication, and then cooled to ambient temperatures for the third time. No attempt is made to recover any of the heat wasted when the cells are cooled. The efficiency of this process could clearly be improved significantly to reduce both the cost of the cell and the time required for the cell to "pay-back" the energy used in its manufacture once it is installed.

[89] "ERDA "Photovoltaics Program "
[90] "h! acomber, J PL, opcit , pp 71-72

Table X-7 . —The Major Steps in Manufacturing a Silicon Photovoltaic Device

	Surface prep	Junction format ion (alternate)	Metalization	Other processes	Module fabrication	Totals
Motorola	0.282	0.080	0.082	0.042	0.385	0871
RCA	0.003	Ion 0.044 (Spin 0.081) & PO Cl3 (Print 0.048)	0.101	0,045	0.114	0309 to 0.343
Texas Instru - ments	0.035	Spin 0.048 (Ion O 092)	Thik Film 0.050	0.093	Hermetic 0.272 Nonhermetic 0135	0391 to 0.586

Assumptions
1) cells would be made uslnq wafers Sliced from ingots
2) Based upon an extrapolation of present technology with reasonable development but wlthout technological breakthroughs
3) 50 MW/year productlon of a slngle deslgn.
4) 14 percent cell efficiency

* Does not include cost of silicon material nor wafers

SOURCE JPLLoh CostSiliconSolarArrayProjet(receivedby OTA June1977)

MODULE ASSEMBLY AND ENCAPSULATION

Finally, the process of connecting cells together into arrays and encapsulating them to protect the cells from the weather must be reduced by a factor of 10 from current costs to about $0.12/watt.[91] A variety of techniques have been proposed and the cost reduction seems feasible, but the exact technique which will be used is not yet clear.

Thin Films

The nonsilicon thin-film technologies which show the greatest potential for reaching the cost goals early in the 1980's are all based on the CdS/Cu_2S heterojunction cell. Much more work has been done on the problem of reducing the cost of manufacturing CdS/Cu_2S than on any other thin film.

Cadmium sulfide cells are produced commercially in the United States by Solar Energy Systems (SES) of Newark, Del. These cells are produced in batch processes[92] and hermetically sealed in glass. Their efficiency is 3.2 percent with an array efficiency of 2.5 percent.[93] SES is attempting to keep their array prices competitive with the market price of silicon arrays. An eariy prototype cell is shown in figure X-12.

No technical barriers to scaling up the current manufacturing procedures are foreseen, but a significant amount of "process development" will be required to bring prices below $1,000/kW.[94] Researchers at Westinghouse estimate that a factory based on this process capable of manufacturing cells for $1 to $2/watt could be producing commercial products within 2 years of a decision to initiate the project.[95]

Figure X.12.—Thin-Film Cadmium Sulfide-Copper Sulfide Solar Cells

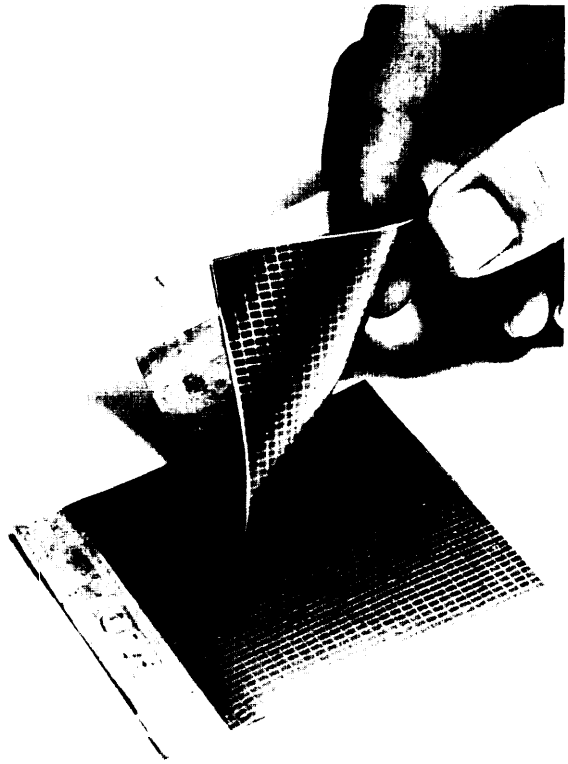

PHOTO: Courtesy of the University of Delaware

Photon Power, Inc., of El Paso, Tex., is developing a chemical spray process which forms cadmium sulfide solar cell panels directly on hot float-glass as it comes out of the glass factory.

Photon Power has completed a pilot plant in El Paso for testing the technique. If the process works as well in large- scale production as it has in laboratory tests, the facility will be expanded into a small manufacturing plant which, it is hoped, will be able to produce arrays which can be sold for $2 to $5/watt by 1980.[96] Low costs are possible because all of the processes in cell manufacturing (cell growth, junction formation, ap-

---

[91] See table X-6

[92] F A Shirland, Westinghouse Research Labs, private communication, Mar. 26, 1976

[93] S DiZio (President, SE S) private communication, Apr 7 1976.

[94] Ibid.

[95] F. A Shirland, Westinghouse Research Labs, private communication, Mar. 26, 1976.

[96] G. Rodrick, (President, Photon Power, Inc.), private communication, March 1978

plying contacts, and encapsulation) involve spraying a series of chemical layers onto hot glass moving through the plant on a continuous conveyor. Laboratory devices produced with a similar process have yielded 5.6-percent efficiencies, and cells with 8- to lo-percent efficiencies appear possible. " Even higher efficiencies may result if the prom i sing results of experiments mixing zinc with cadmium can be integrated into the process.

Photon Power is working with Libby-Owens-Ford (a part owner of the company) to design a process which can be attached to a float-glass plant. A preliminary calculation indicated that a plant costing about $140 million would be able to produce 2 G W_e/year for $0.05 to $0.15/watt.[98] The major technical challenge in increasing output will be finding a way to increase the speed of the spray application process from the 2 cm per minute in the pilot plant by about an order of magnitude to match the rate at which glass is produced from a flat-glass facility.[99] It will also be necessary to determine how much of the cadmium not initially captured on the glass can be recycled (this is important since cadmium is expensive and toxic) and to determine how well the hydrogen chloride, sulphur, and sulfurous acids can be recycled.

The French National petroleum company, Compagnie Francaise des Petroles, owns controlling interest in Photon Power. Libby-Owens-Ford and D. H. Baldwin Co., own minority interests.

Patcentre International of Hartfordshire, England is working on a spray process very similar to Photon Power's. They report s. s-percent efficiency for their laboratory devices, and hope to market a commercial product in 1980. '[100]

A number of other cells, usually based on heterojunctions between an element in group III and group V of the periodic table, are being investigated as candidate thin film cells, but few are beyond the stage of basic laboratory research. The present performance of some of these experimental devices is shown in table X-2.

[97] G A Samara (Sandia Laboratories, Albuquerque), *Proceedings, ERDA Semiannual Photovoltaic Advanced Materia /s Program Review Meeting,* Wash ington, D C , Mar 22-23, 1977

[98] J F Jordan, Photon Power, Inc , *International Conference on Solar Electricity,* Toulouse, France, April 1976

[99] J F Jordan, Photon Power, Inc , private communication, April 1976

[100] C Kaplan, IEEE Spectrum, "Power/Energy Progress Report, " *IEEE Spectrum,* Vol 15, No 1, January 1978, p 51

MATERIALS AVAILABILITY AND TOXICITY

Enthusiasm about cells based on mate rials other than silicon must be tempered to some extent by uncertainties abou't the health hazards which they may present and about the limits imposed on their production by U.S. and world supplies of component materials. Both cadmium and arsenic, used in GaAs cells, are toxic and while it may be possible to reduce the hazards they present to manageable proportions and while both materials are already used extensively in commercial products and manufacturing, it clearly will be necessary to examine these hazards with some care before recommending an energy system which would significantly increase the use of these materials near populated areas. Domestic supplies of both cadmium and gallium will be sufficient to supply annual production rates in excess of several thousand megawatts a year but production beyond this level could tax domestic supplies and, in the case of cadmium, known world reserves limit the ultimate potential of CdS/Cu_2S

devices to about the level of current U.S. energy consumption.

SILICON

Silicon is nontoxic and in plentiful supply (about one atom in five in the Earth's crust is a silicon atom), although current production rates of purified silicon are not adequate to support a large solar industry. The manufacture of silicon devices with present techniques involves the use of a number of hazardous chemicals (PH_3, BCl_3, H_2S_2, HCl, HCN).[101] Existing State and Federal laws should be sufficient to ensure that releases of these materials into the air and water are kept to acceptable levels, although vigilance will be needed to ensure compliance with these regulations. Meeting the standards may add to the cost of the devices.

CADMIUM

Cadmium is a cumulative heavy-metal poison with a half-life in the human body of 10 to 25 years. Cadmium poisoning is believed to lead to accelerated aging, increased risk of cancer, heart disease, lung damage, birth defects, and other problems.[102] Chronic exposure to airborne cadmium can lead to emphysema and other respiratory problems. 103 Cadmium, however, is used in many commercial and industrial products; it is used for corrosion protection on bolts and screws, in paints, plastics, rubber tires, motor oil, fungicides, and some types of fertilizers.[104] Increased use of cadmium resulting from large-scale manufacture of CdS/Cu_2S cells could result in increased release of cadmium from mining, refining, and manufacturing of the cell, and it would increase the amount of cadmium present in products located near populated areas, thereby increasing the risk of exposure in the event of fires, accidents, or the demolition of buildings.

More stringent standards may be needed both in manufacturing processes involving the material and in permitting usage of the material in commercial products. At present, cadmium is not subject to any environmental controls, but under both the Toxic Substance Control Act (P. L. 94-469) and the Resource Conservation and Recovery Act (P. L. 94-580), EPA has jurisdiction over its regulation which, if instituted, could include both solar and other household uses.

It is apparently possible to significantly reduce the cadmium released in the manufacturing process, and it appears that with proper encapsulation CdS cells can be used in residential areas with minimal hazard. [105] Exposure to the material would only occur during fires, accidental breakage, or building demolition. The acceptability of such exposure can be judged better when meaningful standards have been developed.

U.S. production of cadmium in 1970 could support the annual manufacture of cell arrays with a peak output of 5,000 to 20,000 MWe (assuming cells are lo-percent efficient). World production is about five times greater than U.S. production.[106] The higher figure applies to the spray process for manufacturing cells, which results in cells about 6 microns thick. Significant increases in cadmium production may be achievable, however, if demand increases. Identified U.S. reserves of cadmium are sufficient to produce cells with an annual output equal to the current U.S. consumption of electricity. Known world reserves are about five times greater than U.S. reserves. [107]

---

[101] J.G. Holmes, et al, "Environmental and Safety implications of Solar Technologies," *Proceedings, 1977 Annual Meeting* American Section *of the International Solar Energy* Society, Orlando, Fla., June 1977, p. 28-7

[102] N A Esmen, et al., University of Delaware, *Environmental Aspects of Cadmium Sulfide Usage in Solar Energy Conversion– Part P— Toxicological and Environmental Health Considerations – A Bibliography,* NSF/RANN, SE/C I 34872 /T R73/5, June 1, 1973, Section I I

[103] Holmes, op. cit, p. 287.

[104] Esmen, op cit., section II & IV

[105] Esmen, op. cit

[106] H. J Hovel, IBM, *Semiconductors and Semimetals,* **op.** cit., p. 219.

[107] R A Heindl, *Mineral Facts and Problems,* U.S. Bureau of Mines, U S. G.P.O ,1970, p 515.

GALLIUM ARSENIDE

Undisassociated GaAs is harmful but apparently not highly toxic. A lethal dose for an average adult is about one-third kg (0.7 lb). '08 To ingest this much GaAs, a person would have to eat the amount of CaAs in about 20m^2(200 square feet) of flat-plate arrays or the amount of GaAs in a field of concentrating arrays covering about 3 acres, clearly a Herculean task. The coatings and protective encapsulation placed on cells should be able to reduce any hazards associated with normal operation of GaAs devices to acceptable levels.

The major danger arises when the material disassociates as a result of a fire or some other accident, since many arsenic compounds are highly toxic and recognized carcinogens, [109] [110] The As_2O_3 which would be released in a fire could contaminate land and water near the fire site. Since the cells would most probably be used in connection with high concentrations of sunlight, care must be taken to ensure that the materials do not vaporize and escape if a breakdown in the cell cooling system occurs. The amounts of arsenic used in a concentratin$_g$ collector, however, would be extremely small. A device with a concentration ratio of 1,000 would, for example, use only about 0.16 gm per m^2 of collector area. This concentration is 250 to 1,500 times smaller than the concentration of As_2O_3 recommended by the U.S. Department of Agriculture for weed control. [111]

Gallium supplies should not place a si$_g$-nificant constraint on the use of GaAs devices. U.S. consumption of gallium in 1973 was 8.5 metric tons per year, most of which is imported. If this amount of GaAs were used to produce 50-micron-thick cells used in tracking collectors producing concentration ratios of 1,000, the arrays would have a peak output of about 10 GWe at an efficiency of 20 percent. These arrays would have an average output of about 1 percent of the average output of all electric-generating facilities in the U.S. in 1977. [113] Domestic production of gallium could be increased substantially if an attempt is made to extract the gallium associated with coal, aluminum, and zinc ores. A recent study indicated that the United States could produce about 600 metric tons/year of gallium from these sources. ' So the gallium resource is ample. World resources-of gal lium are about 1.1 x 105 metric tons.}'5

[108] Based on LD_{50} of 4,700 mg/kg body weight cited in the *Registry of Toxic Effects of* Chemical *Substances,* 1975 Edition, U S Department of HEW, NIOSH

[109] N I Sax, *Dangeroqs Properties of Industrial* Materials, *Fourth* Edition, Van Nostrand Reinhold Co , 1975, pp 420-421

[110] George L Waldbott, *Health Effects of Environmental* Pollutants, C V. Mosby Co., 1973, pp. 202-203

[111] *USDA Herbicide Manual, 1965*

[112] Y *C M* Yeh, JPL, private communication, Apr. 25, 1975

[113] H. j Hovel, IBM, Semiconductors and *Semimetals,* op. cit , p 219

[114] R N. Anderson," *Available Supply of Gallium and* Arsenic, NASA-Langley, Contract Order No L42953A, 1976

[115] HJ Hovel, IBM *Semiconductors and Semimetals,* Op cit, p 220

PERFORMANCE OF CELLS IN REAL ENVIRONMENTS

Since the output of cells varies as a function of temperature, it is necessary to compute cell temperatures in order to obtain an accurate estimate of the output of cells installed in various types of collectors. The temperature of the cells depends on the effective heat-transfer coefficient of the system used to provide cooling. In simple flat-plate systems, the heat loss from the front (and possibly also the back) of the arrays provides adequate cooling. In concentrating devices, it is usually necessary to provide more sophisticated cooling systems. These systems can be passive [i. e., large, finned radiating surfaces attached to the cell), or active cooling can be provided by pumping liquids across the back of the cell.

PASSIVE COOLING

The heat-transfer capabilities of a variety of passive heat exchangers have been measured, although much more work must be done to obtain adequate data in this area. The results, shown in table X-8, are expressed in terms of an "effective heat-transfer coefficient" k_e where

$$k_e = [\text{rate of heat removal (kW/m}^2 \text{ of heat exchanger)}]/(T - T_a) \quad \text{(x-3)}$$

In this, k_e varies with wind speed and thus depends not only on the type of heat exchanger attached to the cells, but also on the air circulation possible in each installation.

Table X-8.— Effective Convective Heat-Transfer Coefficients [k_e] for a Variety of Cooling Systems

Device	Wind velocity	k_e(kWjm'OC)
Air circulating passively through metal pan in back of cells	0	0.015
Same as above	' 'average'	0.025
Flat plate with finned metal heat-reject ion surfaces	''average'	0.30
Active water cooling with ' 'simple flow' . .	—	1-3
Active water cooling with "impingement cooling'	—	3-1o

SOURCE Table prepared by OTA from data supplied by F T Bartels,(Spectrolab,Inc .) Mar 1976.

In order to obtain a relation between cell temperature *T* and insolation level I, an energy balance is written

$$\alpha I = k_e (T - T_a) + \eta I \quad \text{(x-4)}$$

where α is the absorptivity of the encapsulated cell and T_a is the ambient air temperature. The value of I is given by the following relations for f tat-plates or concentrating systems:

$$I = I_D \cos\Theta_i \, \tau(\Theta_i) + I_d \tau_d \text{ (flat plates)} \quad \text{(X-5)}$$
$$I = I_D C_r \eta_o \text{ (concentrating systems)}$$

where:

I_D = direct normal solar intensity (kW/m^2)
Θ_i = angle between the Sun and the normal to the cell
$\tau(\Theta_i)$ = transmissivity of cell covers for direct radiation (at angle Θ_i)
I_d = intensity of diffuse solar radiation (kW/m^2)
τ_d = transmissivity of cell covers for diffuse radiation ($\tau[\Theta_i]$ integrated over all incident angles)
C_r = geometric concentration ratio of concentrator optics
η_o = optical efficiency of the concentrator

Equations (X-2, X-3, and X-4) can be combined to yield an expression for cell efficiency in terms of insolation level:

$$\eta = \eta(28°) \frac{[1 - \beta(T_a - 28) - \beta\alpha I/k_e]}{[1 - \eta(28°)\beta I/k_e]} \quad \text{(X-6)}$$

ACTIVE COOLING

If water is pumped through a heat exchanger attached to the cells, the value of K_e can be made as high as 3 to 10 kW/m^2 "C. With such high rates of heat removal, cell temperatures can bz maintained at 15o°F (65 'C), even at concentration ratios near 1,000. The removed thermal energy available in the cooling fluid (Q_A) is given by

$$Q_A = \frac{I[\alpha - \eta(28°)(1 - \beta[T_F - 28])] - U_L(T_F - T_a)}{1 + [U_L - I\eta(28°)\beta]/k_e} \quad \text{(X-7)}$$

where I is defined as before. U_L is the heat loss coefficient which differs with each collector design. This equation assumes the entire receiver area is covered with cells. T_f is the average temperature of the cooling fluid (a more sophisticated equation considering cell coverage ratios less than unity and the difference in inlet fluid temperature is developed in chapter VIII.

The cell temperature (T) is given by

$$T = T_f + Q_A/k_e \quad \text{(X-8)}$$

and the cell efficiency *(n)* is given by

$$\eta = \eta(28°)(1 - \beta[T_f + Q_A/k_e - 28]) \quad \text{(X-9)}$$

PHOTOCHEMICAL ENERGY CONVERSION

Photochemical energy conversion has many of the advantages of photovoltaic energy conversion and, in addition, the advantage that the chemicals may be stored for later use. However, the technology is not as well developed as photovoltaics, and much research remains to be done. The nascent state of photochemical energy conversion is compounded by the fact that public awareness and Government funding are both low, and thus research has been for the most part confined to a few universities,

In 1972, Fujishima and Honda announced the discovery of a process by which light energy incident on an electrode suspended in water could be used directly to convert the water into hydrogen and oxygen without any noticeable degradation of the electrode.[116] The original Japanese work has generated a considerable amount of interest and a number of other materials have been examined. [117] [118]

A system being studied by research teams of the Allied Chemical Corporation and Massachusetts Institute of Technology is illustrated in figure X-13. In this system, hydrogen is produced at the platinum cathode and oxygen is generated at an anode made from a semiconductor material such as TiO_3 or CaAs. Some work has also been done on systems in which both electrodes are semiconductors. Other techniques for generating hydrogen have also been demonstrated. Researchers at the California Institute of Technology have demonstrated that hydrogen is released when light strikes a complex Rhondium compound. 20 Research at the University of North Carolina at Chapel Hill has led to the development of a ruthenium compound which can split water into hydrogen and oxygen when applied in a monolayer to a glass surface and exposed to sunlight. 'z' All of these processes now exhibit very low efficiencies, and long-term stability has not been demonstrated. Almost *no work* has **been done to determine the potential cost of such systems.**

The photosynthetic process used by plants to convert sunlight into storable fuel sources is clearly a photochemical system with great potential. Work is underway to better understand the basic chemistry of the process and, of course, there is increasing interest in the use of plant materials as a fuel source. The use of biological materials as an energy source is beyond the scope of the current study.

---

[116] A Fujishima and K Honda, "Electrochemical Photolysis of Water at a Semiconductor Electrode," *Nature* 238, July 1972, pp 37-38

[117] K L Hardee and A J Bard, *J. Electrochem Soc., 124,* 215 (1977)

[118] M Wrighton and J. M. Bolts, "Characterization of Band Positions Photoelectrodes for the Photoelectrolysis of Water, " paper delivered to the American Chemical Society, San Francisco, Calif , September 1976, and *J. Phys. Chem., 80,* **2641,** 1976.

"qHydrogen *Production From* ***Solar Energy,*** *SITREP Energy R&D,* Report No. 154, Navy Energy and Natural Resources R&D Off Ice, Feb 18,1977.

[120] M Simon, "UNC Professor Patents Solar Energy Process," *Chapel Hill Weekly,* June 1976.

"'Gray Discovers Rhodium Compound at Caltech," *The California Tech,* Oct. 7, 1977, pp. 1, 4.

Figure X-13. — Photochemical Energy Conversion

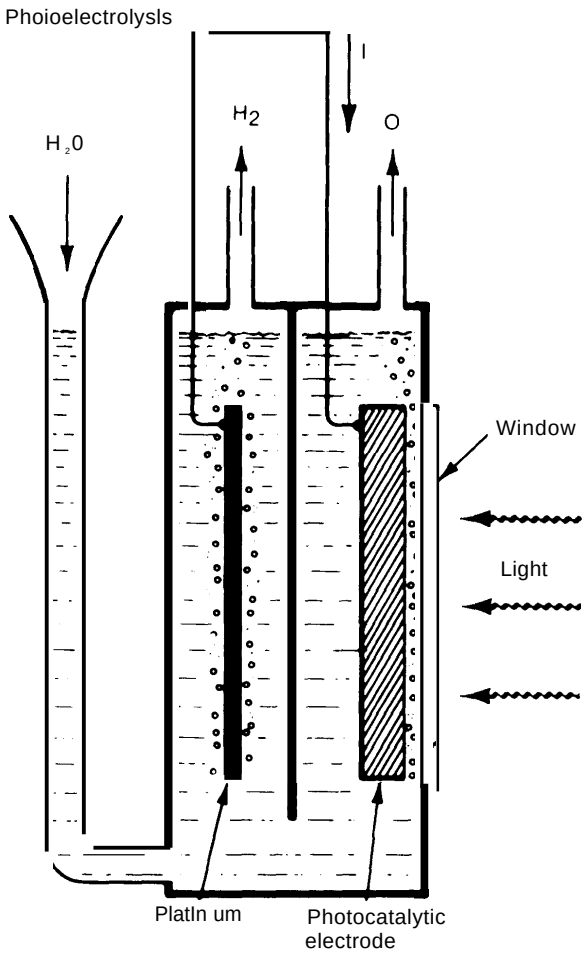

SOURCE:
Goodenough, J B (Professor, Oxford University, England) "The Opt Ions for Using the Sun," *Technology Review* (Ml T.) 79(l), October/November 1976, pp 62-71

Chapter XI
ENERGY STORAGE

Chapter XI.—ENERGY STORAGE

Page

Major Design Choices 429

Thermal Storage 432
- Overview 432
- Low-Temperature Storage 0° to 150°C (32° to 302°F) 432
  - Sensible-Heat Storage in Water. 432
  - Sensible-Heat in Rocks. 441
  - Latent-Heat, Low-Temperature Storage . . 442
  - Concentrated Solutions 445
- Thermal Storage at Intermediate and High Temperatures 447
  - Refractory Bricks. 447
  - Steel Ingot Storage 449
  - Heat-Transfer Oil Thermal storage 451
  - Refined Fuel Oil Thermal Storage 451
  - Latent-Heat Systems. 453
  - Environmental Concerns 458
- Thermochemical Storage. 459
  - Background 459
  - Design Alternatives. 461
  - Summary 464

Electric Storage 464
- Mechanical Storage Devices 466
- Battery Storage. 469
  - Lead-Acid Batteries. 470
  - Advanced Batteries. 472
- Power Conditioners. 477
  - Design Alternatives. 477
  - System Performance. 480
- Battery System Costs. 481

Page

Appedix XI-A 487

Appendix XI-B 488

Appendix XI-C 496

LIST OF TABLES

Table No. — Page

1. Proposed Thermal Storage Materials 433
2. Phase-Change TEC Materials in the Low-Temperature Regime With Melting Points Above 75°C (167°F) 443
3. Candidate High-Temperature Thermal-Energy Storage Materials Without Phase Change . 449
4. Commercial Organic and inorganic Heat-Transfer Agents.. 452
5. Properties of Latent-Heat Thermal Storage Materials 456
6. Candidate Chemicat-Energy Storage Reactions 462
7. Conventional Hydroelectric Capacity Constructed and Potentiai at Existing Dams. 469
8. Economic Specification (5-hr Battery) 471
9. Load-Leveling Battries: Candidates and Characteristics; Developers and Demonstration Dates 473
10. Loss Mechanisms of iron-REDOX Batteries 477
11. System Cost Estimates for Near-, Intermediate-, and Long-Term 482

B-1. Thermal Properties of Soils 492
C-1. Assumptions for Hot Fuel Oil Thermal Storage, Single Family House 498
C-2. Assumptions for Therminol-55/Rock Thermal Storage 498
C-3. Assumptions for Steel-Ingot Thermai Energy Storage 500
C-4. Containment Materials 501
C-5. Latent-Heat Storage Tank Assumptions. . 501
C-6. Assumptions for NaOH Latent-Heat Storage 502
C-7. Assumptions for NAF/MgF_2 Latent-Heat Storage 502

LIST OF FIGURES

Figure No. *Page*
1. Possible Locations for Storage Equipment in Onsite Solar Energy Systems. 430
2. Vertical Tank in a Drilled Hole With Foamed-in-Place Insulation 434
3. Installation of insulated, Underground, Storage Tank at Solar Heated and Air-Conditioned Burger King, Camden, N.J.. 435
4. installation of Fiberglass Underground Tanks 436
5. Cost of Buried Tanks 437
6. Megatherm Pressurized-Water Heat-Storage Tank 439
7. Predicted Performance of an Aquifer Used for Thermal Storage 440
8. Potential Sites for Aquifer Storage Systems 441
9. Osmotic Pressure Engine 446
10. Heat of Mixing Engine 447
11. Low-Temperature Thermal Storage Cost per kWh_t Versus Storage Capacity 448
12. A High-Temperature Thermal Storage Device Designed for Residential Use 450
13. Steel-ingot, Sensibie-Heat Storage System 450
14. Steei-ingot Temperature Profiles at Various Times in a Typical Cycle. 450
15. The High-Temperature Heat Storage System at the Sandia Total Energy Experiment. . . . 454
16. Design of “Therm-Bank” Space Heater , .. 454
17. Philips Latent-Heat Storage System With Vacuum Multifoil Insulation. 455
18. Thermodynamic Behavior of Candidate Latent-Heat Storage Salts 457
19. Use of a Sodium Heat Pipe With a Latent-Heat High-Temperature Thermal Storage System 458
20. Typical Thermochemical Storage Technique 460
21. High-Temperature Thermal Storage Cost per kWh_t Versus Storage Capacity 465
22. An isometric View of an Underground Pumped Storage Plant 467
23. Conventional Hydroelectric Capacity Potential at Existing Dams. 468
24. iron-REDOX Battery Structure and Plumbing Diagram 476
25. Model of iron-REDOX Battery Facility. 478
26. The Elements of a Power Conditioning System 479
27. Efficiency of a Solid-State Inverter as a Function of Load 480
28. Power-Conditioning Cost Versus Power .. 483
A-1. Permissible Cost of Storage Equipment as a Function of Energy Prices During Storage Charge and Discharge 487
B-1. Thermal Conductivity of Insulation. 490
B-2. Annual Thermal Losses From Uninsulated Storage Tank 493
B-3. Rate of Heat-Loss to Ground 493

Chapter XI
Energy Storage

MAJOR DESIGN CHOICES

Energy can be stored in thermal form by heating or chilling liquids or solids; in mechanical form by using mechanical or electrical energy to pump water to high reservoirs, spin flywheels or compress air; and in chemical form by driving battery reactions, producing hydrogen or other chemicals to generate heat, or by distilling solutions. This chapter discusses a range of storage technologies which could have a major impact on the cost and performance of onsite solar energy systems during the next 10 to 20 years; it does not attempt to review all possible storage technologies.

Most of these approaches require specialized storage equipment, but in some cases it may be possible to integrate storage into mechanical structures which serve other functions. Careful architecture can increase the **inherent ability** of walls and floors, for example, to store thermal energy.

Energy can be stored at a variety of points in an onsite solar system and some of the opportunities are presented in figure XI-1. The options for the heat engine system are most complex:

1. Energy can be stored at relatively high temperatures before it is used by a heat engine. In this form, high-temperature storage is equivalent to a supply of fossil fuel.
2. Heat rejected by the engines can be stored at relatively low temperatures.
3. Electricity generated by the system can be stored in batteries or other electric storage devices.

It is **unlikely that all three types of storage** would be used in a single installation.

Storage systems can provide a useful buffering role, regardless of whether solar energy is used, since the timing of demands and the timing of generation desirable for peak performance of generating equipment seldom coincide, Most of the equipment discussed in this chapter was developed for systems in which solar energy played little or no part.

Some of the uses of storage are:

1. **Storage in solar devices can be used to provide energy during cloudy periods and at night. Storage can also be used to facilitate starting large solar turbine systems in the morning by preheating the equipment and to allow a gradual cooling of the system when it is closed at night. It can also mitigate the rapid , temperature changes which can result from sudden fluctuations in the Sun's intensity during periods of partial cloudiness.**
2. **Storage equipment can be used to make more effective use of generating equipment. As noted earlier, without storage the output of generating equipment must be continuously adjusted to meet fluctuating demands. This means that generating equipment is either idle or operating at part capacity much of the time— resulting in higher electric costs since capital charges must be paid on the equipment, even if it is not used. Operating plants frequently be low full capacity also means that the**

Figure Xl=1.—Possible Locations for Storage Equipment in Onsite Solar Energy Systems

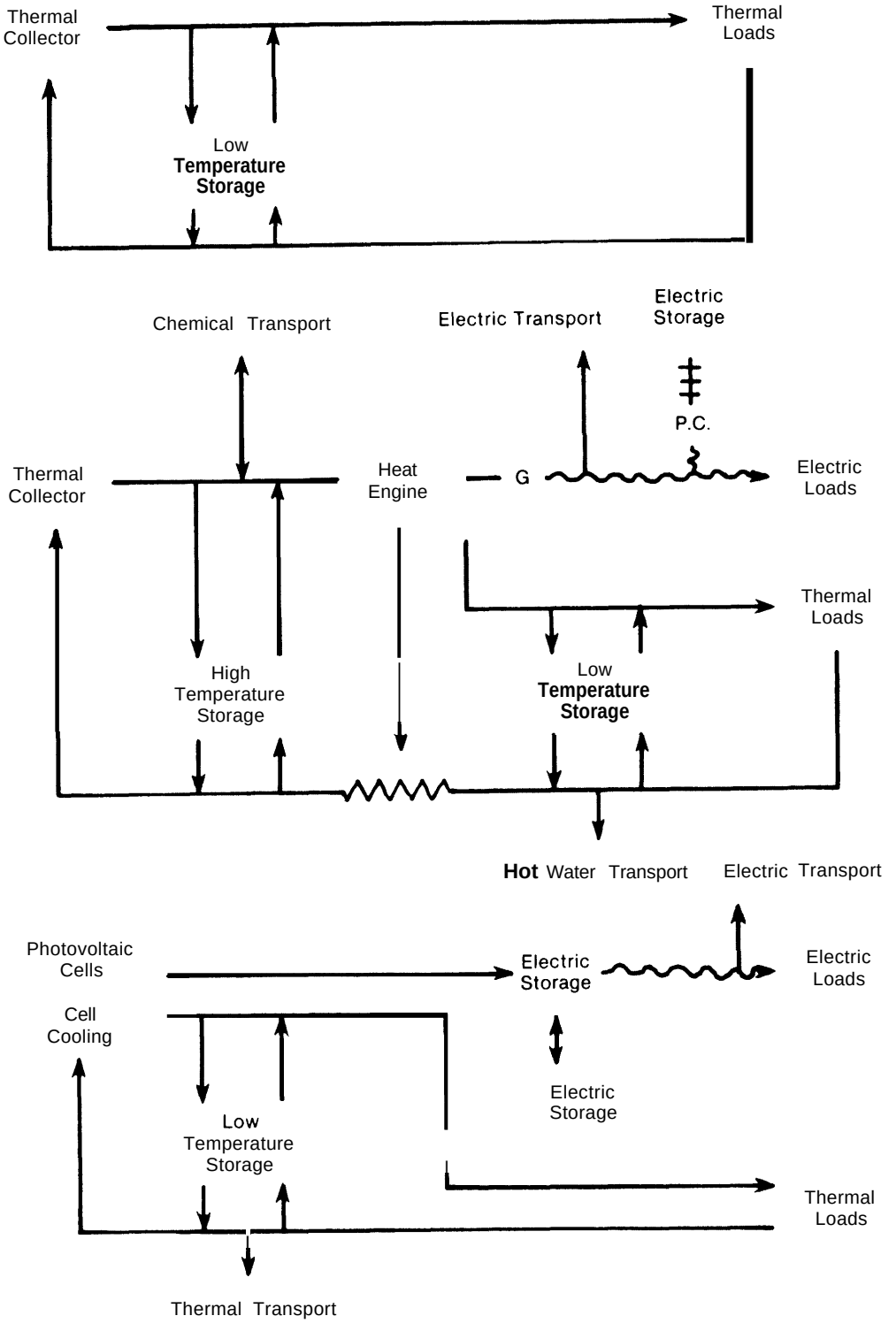

generators are not operating at peak efficiency. Most large coal and nuclear plants cannot readily be adjusted to meet changing loads; demand fluctuations must be met with generating equipment which burns oil or gas—fuels which are becoming scarce and expensive.

Generating capacity can be reduced with storage equipment if the storage is filled while capacity exceeds demand, and discharged during periods of high demand. In electric utilities, this means that gas- and oil-burning plants can be replaced by storage charged from coal or nuclear plants functioning at close to their top output all year. In the case of solar collectors, it means that collectors can be sized to meet average demands instead of peak demands.

With the exception of pumped hydroelectric storage, no electric storage* device is now economically attractive to electric utilities. The rising cost of oil and gas as well as progress in storage technology may reverse this situation in the near future however, and the industry will demonstrate a number of advanced systems during the next few years. The possibilities have been reviewed in two recent studies sponsored by the Electric Power Research Institute (EPRI).[1,2]

Electricity which will eventually be used for electric resistance heating can be stored very inexpensively by using the electricity to heat water or bricks in onsite storage devices. Electric air-conditioning can also be "stored" inexpensively in tanks of ice or chilled water.

Storage in this form will not be used unless prices to consumers are changed during the day to reflect the fact that electricity costs less to generate during off peak hours at night than it does during the day when demands are large. These simple storage devices are extensively used in Europe and Great Britain, where such "time-of-day" rates have been in use for many years and are beginning to be marketed in the few parts of the United States where these rates are being introduced.[3]

(The circumstances under which storage devices can be used economically in load-leveling applications are discussed in appendix XI-B.)

3. Storage can improve the performance of heating, cooling, and other energy-consuming equipment in much the same way that it can reduce the cost of generating electricity. Without storage, the equipment must be large enough to meet peak demands. This means that the equipment must be operated at less than its maximum capacity much of the time, increasing the need for generating equipment and decreasing system efficiency. Storage can have the additional benefit of permitting heat-pump devices and air-conditioning devices to operate when ambient conditions are most favorable. Air-conditioning systems, for example, are much more efficient at night when ambient air temperatures are relatively low.

* The term "electric storage" is used throughout this chapter to mean storage which is charged by and which discharges electricity, even though the energy in the storage device is not in the form of electricity

[1] Ralph Whitaker and Jim Birk (EPRI), "Storage Batteries The Case and the Candidates," *EPRI Journal*, October 1976, p 13

[2] *An Assessment of Energy Storage Systems Suitable for Use by Electric Utilities*, EPRI project 225, ERDA E (11-1)2501, July 1975

[3] William H. Wilcox, statement delivered to the Pennsylvania Public Utility Commission (76 P.R.M.D-7), July 25, 1977

THERMAL STORAGE

OVERVIEW

There are three basic approaches to storing thermal energy:

- Heating a liquid or solid which does not melt or otherwise change state during heating. (This is called "sensible-heat" storage, and the amount of energy stored is proportional to the system's temperature.)
- Heating a material which melts, vaporizes, or undergoes some other change of state at a constant temperature. (This is called "latent-heat" storage.)
- Using heat to produce a chemical reaction 'which will then release this heat when the reaction is reversed.

Equipment for storing energy as sensible heat can be simple and relatively inexpensive if fluids are stored at temperatures below 400°F. One difficulty with sensible-heat storage is that it can be difficult to ensure a constant output temperature.

If a constant temperature is desired to operate a heat engine, or for some other purpose, two separate storage tanks are required: one to store the hot liquids and one to store the low-temperature fluids emerging from the engine.

Latent-heat storage can supply energy at constant temperature from a single container and can usually store greater amounts of energy in a given volume or weight of material. The materials used, however, are relatively expensive and problems are encountered in transmitting thermal energy into and out of the storage medium.

Chemical storage techniques can be used at a great variety of temperatures and have the advantage of allowing storage of reduction products at ambient temperatures (eliminating the need for expensive insulation). Chemical energy can also be transported conveniently. Recovering energy from storage could be expensive, however, if expensive catalysts are required. Chemical storage can be expensive if some of the chemicals which must be stored are in the form of gases requiring large pressurized tanks.

A number of promising reactions are being examined, however, and there is reason to be optimistic that an attractive technology can be developed. Research in this area is in a formative stage.

Table XI-1 summarizes some of the materials and approaches which have been suggested for thermal energy storage,

LOW-TEMPERATURE STORAGE 0° to 150°C (32° to 302° F)

Sensible-Heat Storage in Water

A variety of techniques have been examined for storing relatively low-temperature thermal energy, but the use of water as the storage medium for liquid systems has been the dominant approach and is likely to remain so for at least a decade.[45] Most solar heating and hot water systems use an insulated hot water tank located in the building equipment room or buried in the ground. Figure XI-2 shows a cross section of a typical installation, and figures XI-3 and XI-4 show the installation of steel and fiberglass tank. Tanks can be made from a variety of materials, and the costs of a number of commercially available containers are summarized in figure XI-5. It may be possible to reduce the cost of large tanks significantly by simply lining an excavation with a watertight

---

'C L Segaser (Oak Ridge National Laboratory), *Thermal Energy Storage Materials and Devices,* OR NL-HUD-M IUS-23, August 1975

'George C. Szego, "Hot Water Storage Systems Croup Report, " in *Proceedings* of the Workshop on Solar Energy Storage Subsystems for the Heating and Cooling of Buildings, NSF-RA-N-75-041, ASH RAE, Apr 16-18,1975, pp 17-23.

Table XI-1 .—Proposed Thermal Storage Materials

Storage type	Temperature Regime: 0°-15 °C (32°-50°F) (stores cooling for air-conditioning)	30°-150°C (86°-302°F) (process heat and low-temperature heat engines)	200°-350°C (392°-662°F) (heat engines and process heat, absorption air-conditioning)	400°-1,000°C (752°-1,832°F) (heat engines)
Sensible heat	— water	—pressurized water — rocks	—fuel oil —organic heat-transfer liquids (e. g., Therminol, etc.) — rocks —steel —pressurized water	— rocks —steel —heat-transfer salts (e. g., HITEC)
Latent heat	– C_{14}/ C_{16} paraffin — 1 -Decanol —other paraffins — Inorganic salt, hydrate eutectics — ice	— Inorganic salt, hydrate eutectics (e. g., $CaCl_2 6H_2O$) —organic compounds (e. g., paraffin & CCl_4)	— NaOH	— in organic compounds (LIH, NaOH, KNO_2/ $NaNO_2$) —eutectic salts (LiF, NaF, etc.]
Chemical reaction		—metal hydrides (e. g., $LaNi_5H_2$)		$CO + H_2 \rightleftharpoons CH_4 + H_2O$ $2SO_3 = 2SO_2 + O_2$

(and possibly insulating) material. Plastic insulations (such as polyurethane) can simply be floated on the surface of the thermal lake thus produced.

Insulation can represent a significant part of the cost of small water tanks, but in very large devices (i. e., in systems capable of holding more than about 30,000 kWh, or about 160,000 gal.) the insulating value of dry earth surrounding the tank may be adequate. The insulating value of dry soil 10 meters (33 feet) thick is roughly equivalent to that of a layer of polyurethane foam 30 cm (12 inches) thick. Very dry, low-conductivity soil would be equivalent to 1.3 m (4.3 ft) of polyurethane. The heat conduction of moist soil should decrease to this value as it is heated by energy escaping from the tank and dries out. [b] Since most buildings are located in areas where ground water is quite deep, earth insulation may be able to provide the bulk of the insulation required for large thermal storage systems. It must be recognized, however, that it can take as much as a year for the earth around a large storage tank to reach equilibrium by heating and drying, and a considerable investment of energy may be required to achieve this equilibrium. ' Earth insulation is examined in greater detail in appendix XI-B.

The value of a sensible-heat storage system is increased if it is able to return energy at a temperature close to the temperature at which fluids were delivered from the collectors.

One way of doing this is simply to use two storage tanks, one of which holds water at a relatively low temperature (i. e., at the temperature of fluids returned from heating radiators) and another which holds fluids emerging from the Collectors, This is more expensive, although it does not necessarily require doubling the cost. In a large system, several tanks may be needed to provide adequate storage. All that is needed in this circumstance is to maintain one empty tank for shifting liquids from hot to cold storage.

[b] J Shelton, "Underground Storage of Heat in Solar Heating Systems," *Solar* Energy, 17 (2), 1975, p 138

'Shelton, op cit , p 143

Figure XI-2. - Vertical Tank in a Drilled Hole With Foamed= in= Place Insulation (for cohesive soils only)

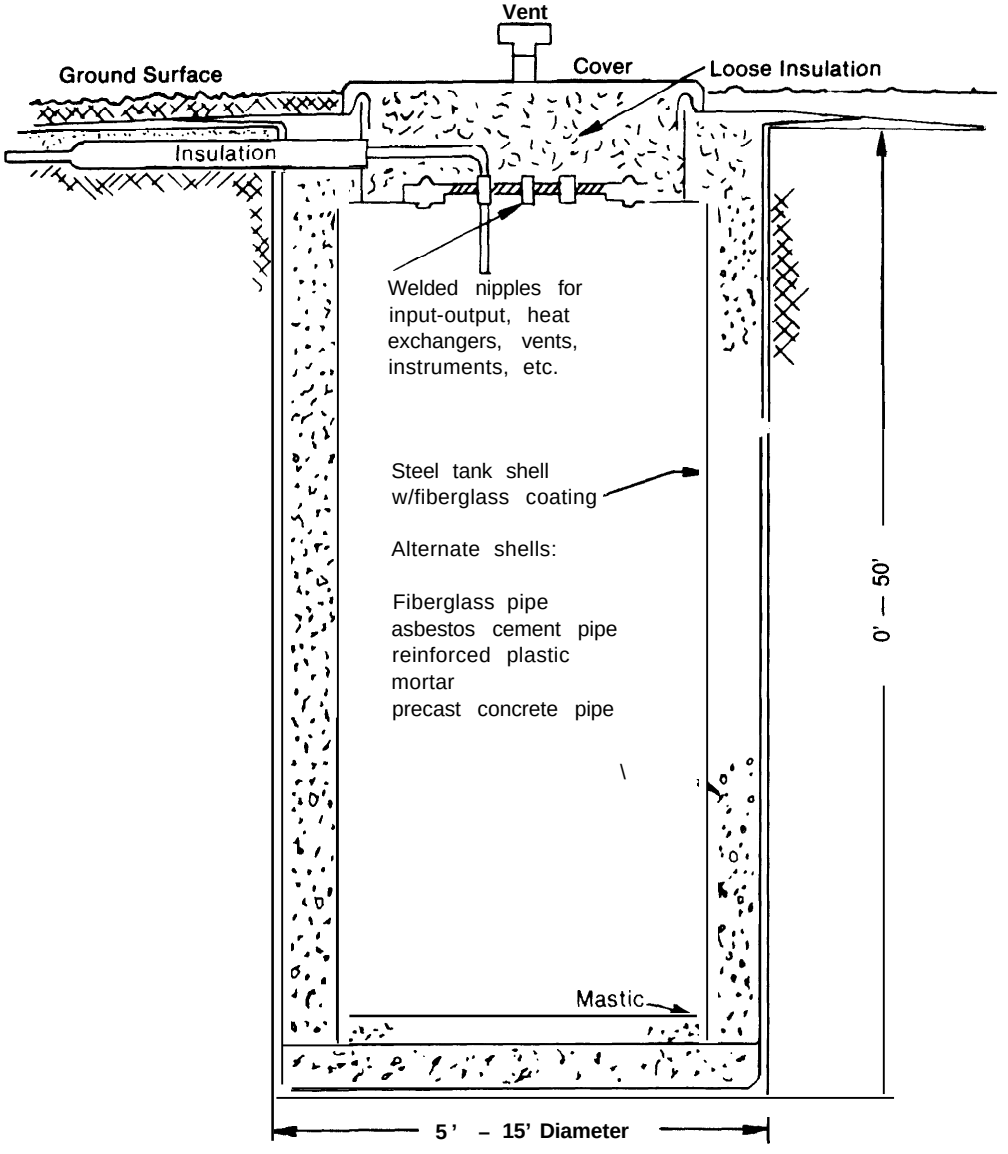

Typical Capacities

4' Diameter x 10' Depth – 940 Gallons
6' Diameter x 12' Depth – 2,538 Gallons
8' Diameter x 16' Depth — 6,015 Gallons
10' Diameter x 30' Depth — 17,624 Gallons

Vertical tank in a drilled hole foamed-in-place insulation (for cohesive soils only)

SOURCE: E. E. Pickering, "Residential Hot Water Solar Energy Storage," *Proceedings of the Workshop on Solar Energy Storage Subsystems for the Heating and Cooling of Buildings*, NSF-RANN-75-041, April 1975, PP. 24-37

Figure XI-3.—Installation of Insulated, Underground, Storage Tank at Solar Heated and Air-Conditioned Burger King, Camden, N.J.

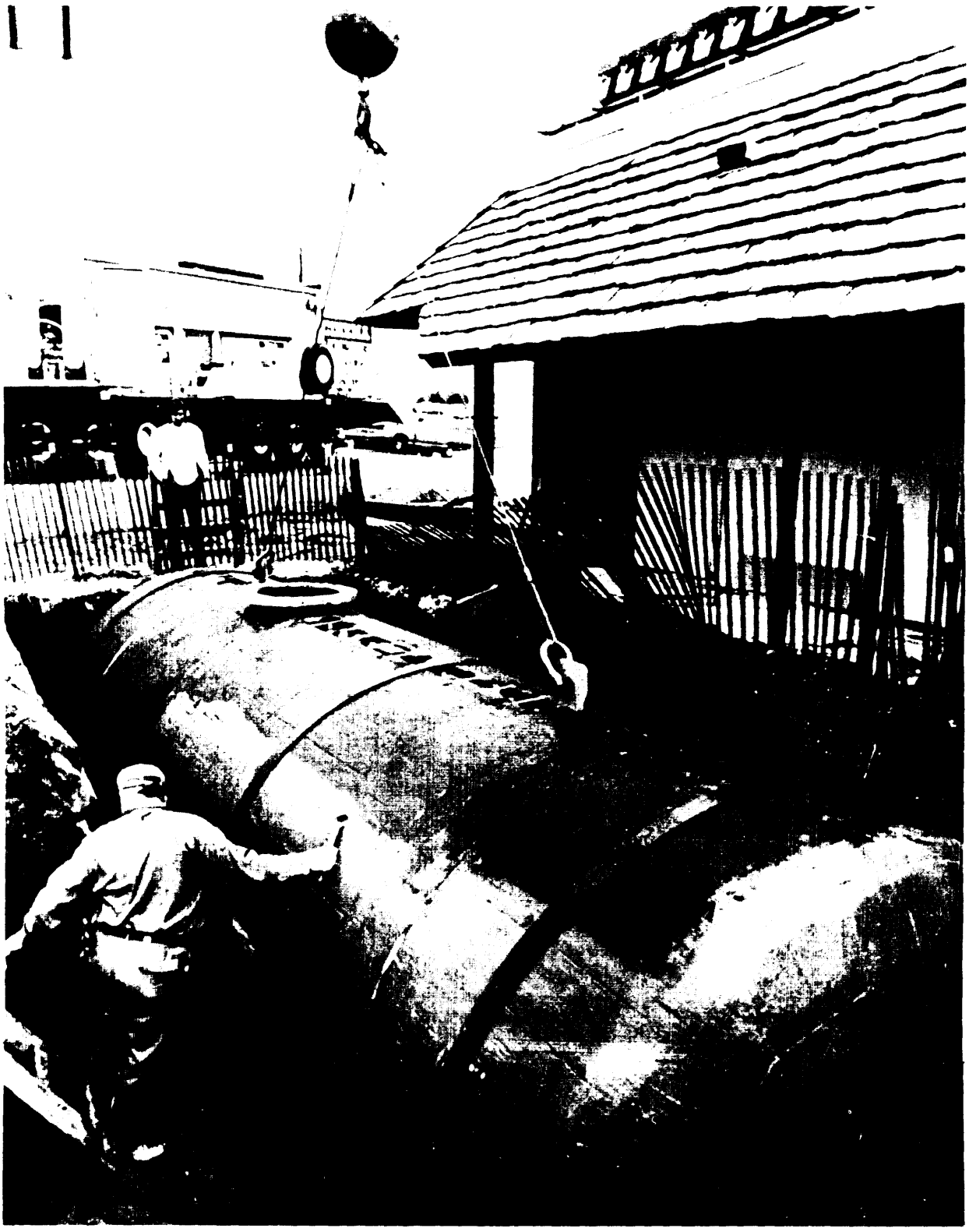

PHOTO: Courtesy of Burger King Corporation

Figure XI-4.— Installation of Fiberglass Underground Tanks

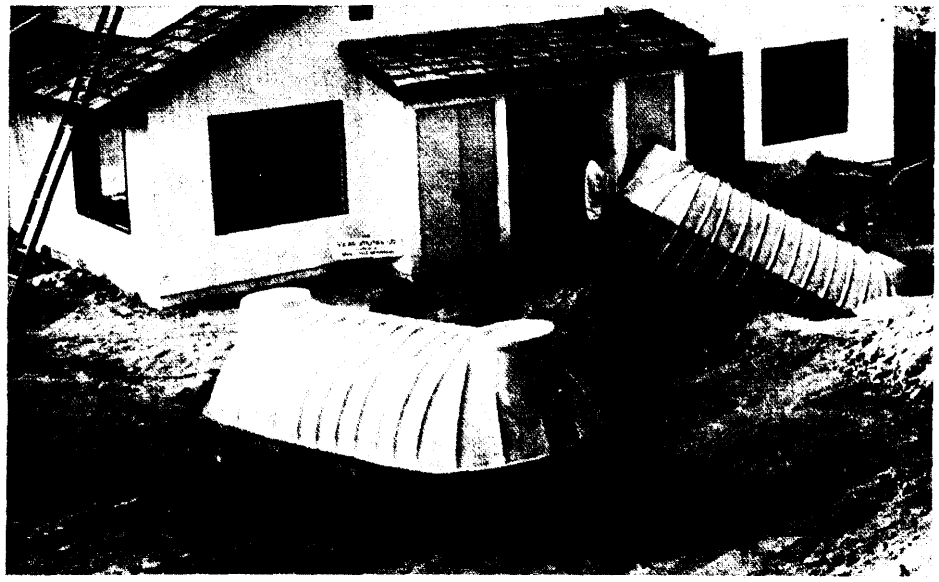

During Construction, a 1,500gallon underground water storage tank is eased into position at a prepared excavation. The tank, made of lightweight resin-reinforced fiberglass, is one of the two installed as part of the solar climate control system.

SOURCE: September 1976 *Solar Engineering,* page 23.

Such a device would require a control system and a series of adjustable valves.

In most single-tank systems, the cold water returning from a heating system mixes with the hot water in the storage tank, gradually lowering the temperature of the fluids. It would be desirable to maintain a temperature gradient across the tank. A recent set of measurements on the behavior of a typical vertical cylindrical tank indicated that while the water in the tank did not maintain a perfect "stratified" temperature gradient, the hot and cold liquids did not mix completely, and a substantial temperature gradient remained. '

Most techniques suggested for increasing the temperature gradients possible in single-tank systems involve the use of internal partitions or one-way valves inside the tanks.[9] Another method being studied involves maintaining a gradient in the density of a salt mixture inside the tank. Heated, high concentrations of salt remain near the bottom of the storage tank if the drop in density due to heating is offset by the higher density resulting from the salt mixture. System stability has been difficult to maintain and experiments are continuing.

Given that the technology of large thermal-storage devices is simple, and its potential for energy savings so great, the small amount of work done in the area is astonish-

'Warren F. Philips and Robert A. Pate, "Mass and Energy Transfer in a Hot Liquid Energy Storage Systerns, " *Proceedings,* **1977 Meeting of the American** Section of the International Solar Energy Society, Orlando, Fla, June 6-10,1977, p. 17-6.

[9]Sui Lin, "An Experimental Investigation of the Thermal Performance of a Two-Compartment Water Storage Tank," Proceedings, the 1977 Annual Meeting of the American Section of the International Solar Energy Society (I SE S), Orlando, Fla., June 6-10, 1977, p. 17-1.

[10]D. L. Elwell, "Stability Criteria for Solar (Thermal-Saline) Ponds," *ISES,* p. 16-29.

Figure X -5.—Cost of Buried Tanks

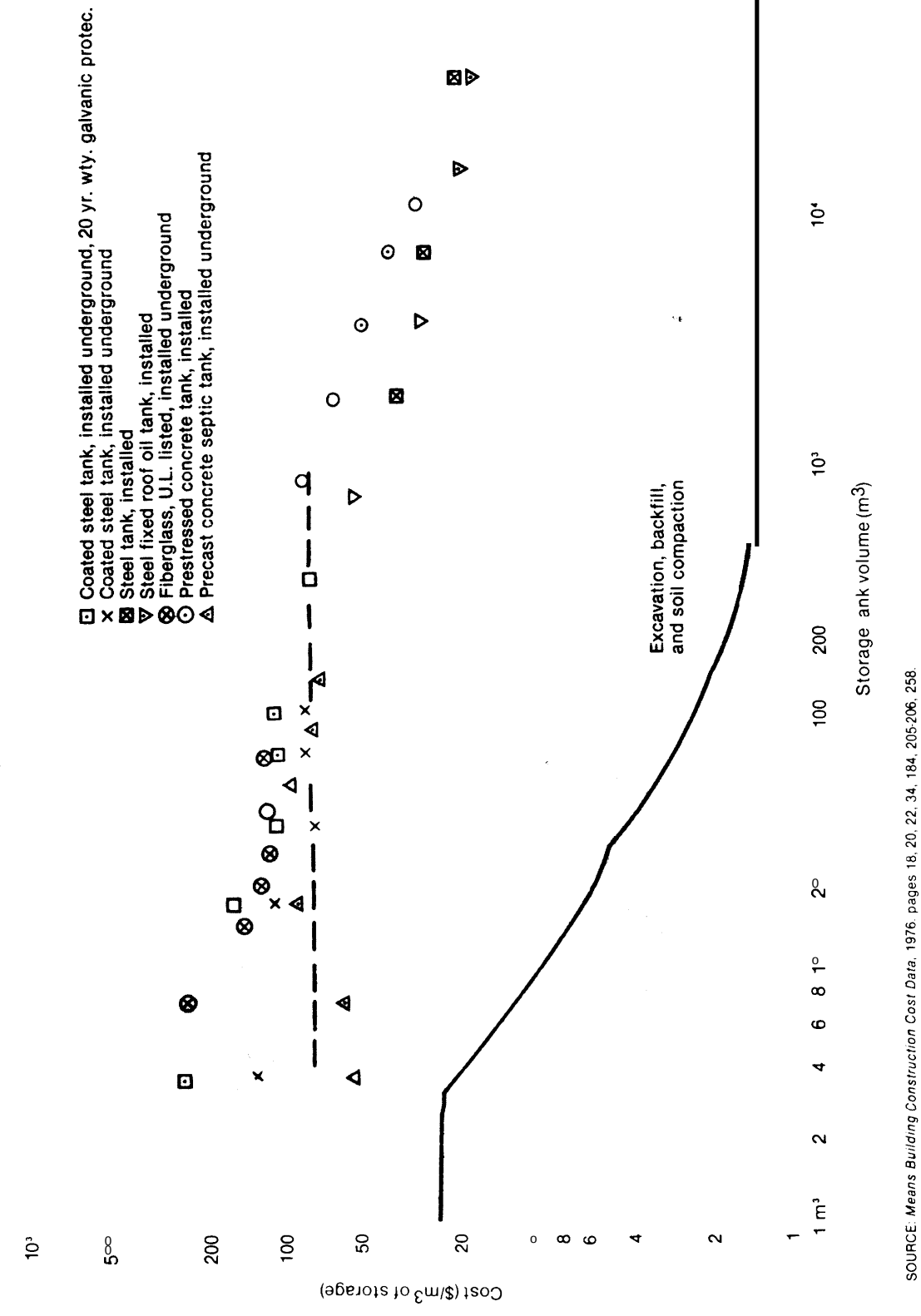

SOURCE: *Means Building Construction Cost Data*, 1976, pages 18, 20, 22, 34, 184, 205-206, 258.

Ing. Possibly the field is not sufficiently romantic.

It is possible to store water at temperatures above the boiling point if pressurized tanks are used. A number of such pressurized storage systems are available in European markets' and a device manufactured by the Megatherm Corporation of East Providence, R. I., is now available on the U.S. market. The Megatherm device, which is illustrated in figure XI-6, stores water at temperatures up to 280° F (138 'C).[12 13] The device is sold to institutions which can use interruptible electric service or take advantage of "time-of-day" rates (see chapter V).

Water storage is probably not an attractive option for storage above 1500 to 200'C (300 °to 400° F) since the pressure required would greatly increase the cost and danger of operating such systems. Local ordinances frequently require all water tanks which operate at temperatures above 2000 F, contain more than 120 gallons, or require more than 2 X 10^5 Btu/hr inputs to comply with ASME low-pressure heating boiler codes. " Pressure above 50 psia may require the presence of a trained operating engineer.

An EPRI study examined the feasibility of using steam accumulators to store heat for later use in a standard steam-electric generating plant and concluded that in this application, storage systems using fuel oil as the storage medium were less expensive. [5]

It may also be possible to store very large amounts of low-temperature thermal energy by pumping hot water into contained underground aquifers, as illustrated in figure XI-7. If a deep aquifer is able to withstand high pressures, it may be possible to store fluids at temperatures as high as 200'C (3920 F), but it is more likely that somewhat lower temperatures will be used. [16]

It should be possible to recover 70 to 90 percent of the energy injected and to maintain a reasonable thermal gradient across the aquifer (the warmest water will tend to float to the top of the structure).

Since the only investment required for such a storage device is a series of wells for injecting and withdrawing water, storage costs can be very low. There is some disagreement about the cost of constructing such systems, but costs could be as low as $0.03/kWht[17]--with power costs in the range of $5/kW.[18] Pumping energy should be in the range of $0.01/kWh (1970 dollars).

Aquifers adequate for thermal storage applications are found in wide areas of the country (see figure XI-8). It should be possible to use aquifers of brackish water as well as freshwater wells and, since there is little net consumption of water in the storage process, the technique will not deplete the water resources of a region or lower water tables. The environmental impact of these systems has, however, never been systematically addressed.

While a number of theoretical studies of aquifer storage systems have been undertaken, 192021 there have been few field tests. One large-scale experiment has been under-

---

[11] A W Goldstern, Steam *Storage Installations,* Pergamon Press, 1970.

[12] *The Megatherm Corporation, East Providence, R.I, July 1976

[13] *Thermal Energy Storage Materials and Devices, OR NL-HUD-MIUS-23,* August 1975, pp. 9-10.

[14] ASME, "Heating Boilers, " *ASME Boiler and Pressure Vessel Code,* Section IV, New York, N. Y., 1968.

[15] *An Assessment of* Energy Storage Systems *Suitable for Use by Electric Utilities,* EM-264, E PRI Project 225, ERDA E (11-1 }2501, Final Report prepared by Public Service Electric and Gas Company, Newark, N j , Vol. II, July 1976, pp 4-45

[16] "W. Hauz and C F Meyer, "Energy Conservation: Is the Heat Storage Well the Key, " *Public Utilities Fortnight/y,* Apr. 24,1975.

[17] "General Electric Corporation, *Heat Storage We//s Using Saline and Other Aquifers,* presentation to the U.S. Department of the Interior, Mar 5, 1976

[18] "General E lectric Corporation, op. cit

[19] C. F. Meyer and D K. Todd, "Conserving Energy with Heat Storage Wells, " *Environmental Science and Technology, 7,* **p512,**

[20] C. F. Tsang, et al., *Numerical Modeling of Cycling Storage of Hot Water in Aquifers,* EOS, 57,918

[21] C. F. Tsang, et al., "Modeling Underground Storage in Aquifers of Hot Water from Solar Power Systerns, " *Proceedings,* the I SES 1977 Annual Meeting, p. *16-20.*

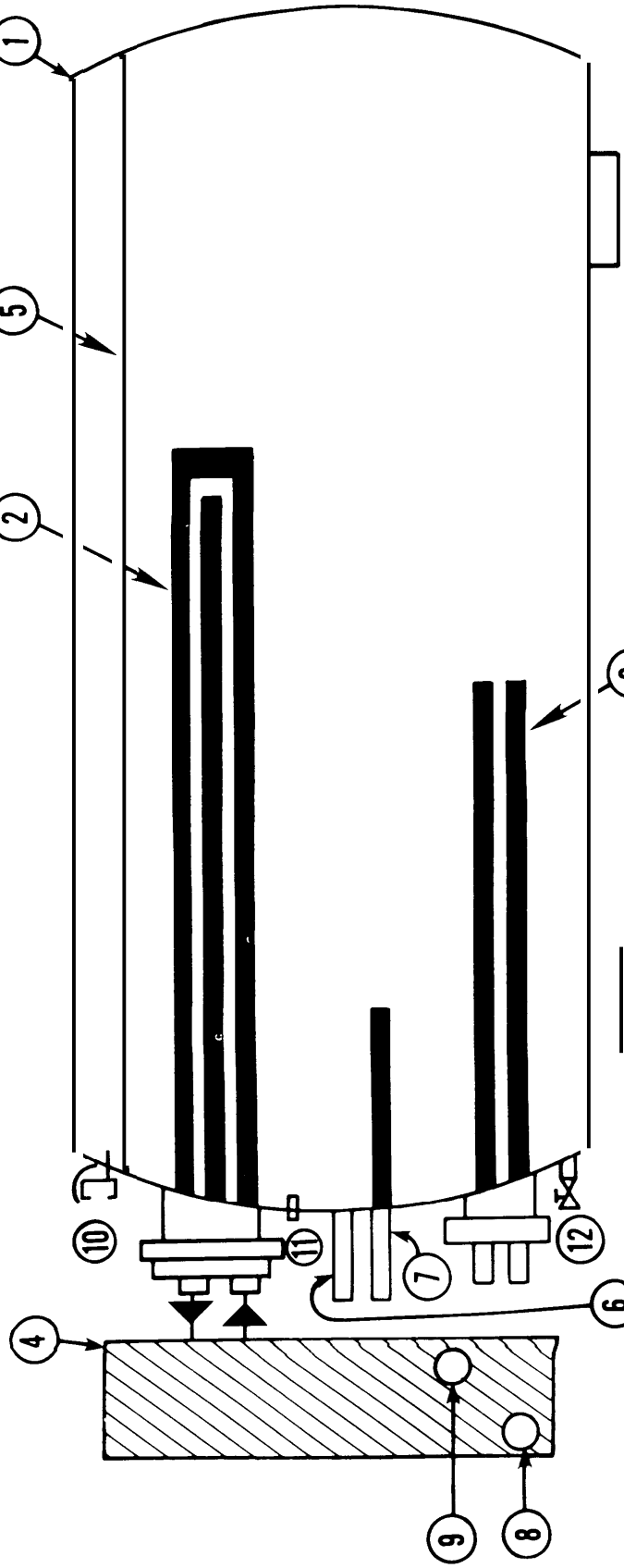

Figure X-6.—Megatherm Pressurized-Water Heat-Storage Tank

1. Standard steel tank
2. Heat exchange
3. Electrical heating elements
4. Tempering condenser
5. Expansion chamber
6. Pressure con rol
7. Temperatu re safety controller
8. nlet
9. Ou let
10. Relief valve
11. Low water cut off
12. Drain

SOURCE: Megatherm

Figure XI-7.— Predicted Performance of an Aquifer Used for Thermal Storage

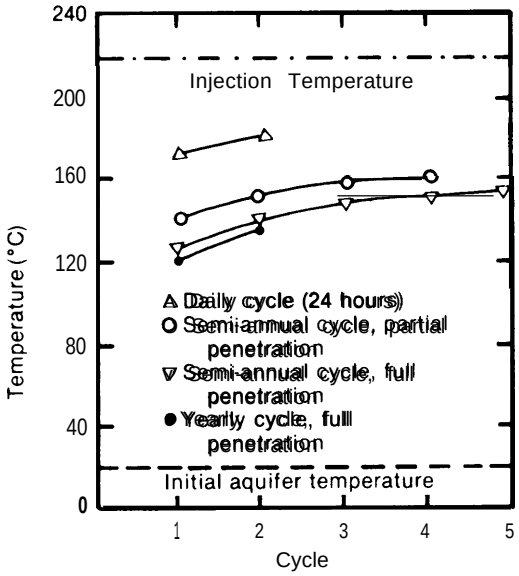

Temperature at the end of each production period (minimum production temperature) versus cycle number

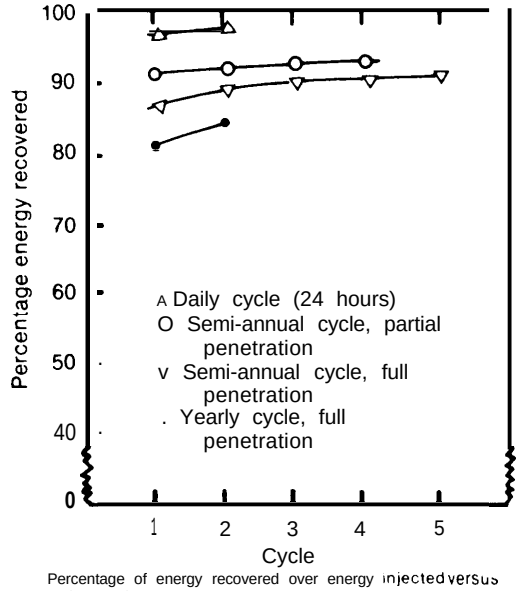

Percentage of energy recovered over energy injected versus cycle number

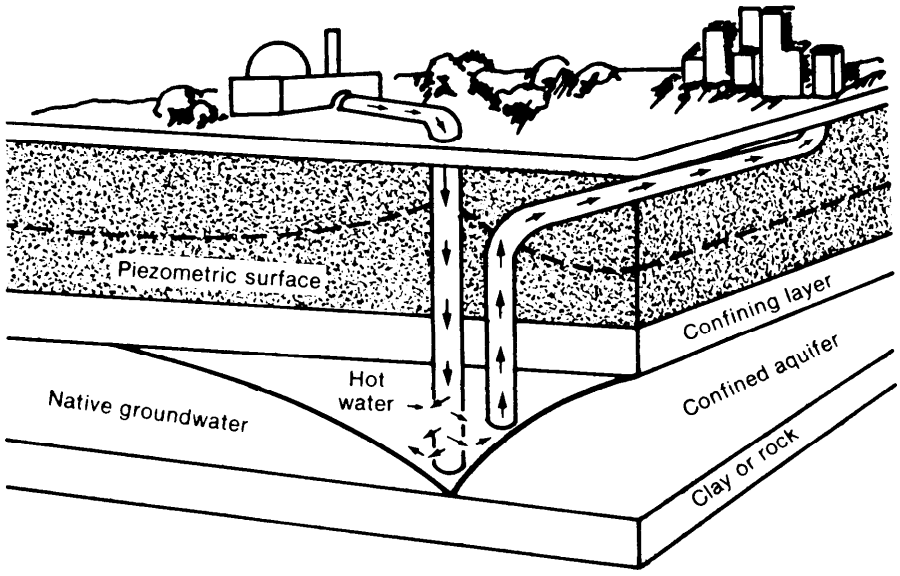

SOURCE' C. F Tsang, et al., "Modeling Underground Storage in Aquifers of Hot Water from Solar Power Systems, " *ISES Proceedings of the 1977 Annual Meeting,* page 16-20.

DRAWING FROM: Walter Hauz and Charles F Meyer, "Energy Conservation: Is the Heat Storage Well the Key?," *Public Utilities Fortnightly*, Apr 24, 1975, p 34.

Figure XI-8. - Potential Sites for Aquifer Storage Systems (Aquifers In the Shaded Areas Should Have Adequate Water Flow)



SOURCE: Geraghty, et al., *Water At/es of the United* Stares, Water Information Center, Port Washington, N. Y., 3rd Ed., 1973.

taken near Bucks, Ala. Approximately 2.4 million gallons of warm water were injected into an aquifer and stored at a temperature of 105" to 1070 F (41 °to 42 "C) and stored for 30 days. About 65 percent of the energy was recovered when the water was pumped out of the formation.[22] unfortunately, the water used in the test was taken from a local river and contained small clay particles which began to clog the aquifer after about 2 million gallons (7.6 million liters) of water had been injected. The test was stopped when injection pressures became excessive.

The experiment will be repeated using water from an aquifer in the same region which does not contain clay particles capable of plugging the aquifer. If all goes well, about 20 million gallons will be injected over a period of 2 months.

Swedish engineers have recently suggested that it may also be possible to store large volumes of heated water in plastic bubbles suspended in a lake.

Sensible-Heat in Rocks

Energy can be stored at low and intermediate temperatures by heating rocks held in insulated containers. Rock storage is typically used with solar heating systems using air to transfer heat from collectors to storage since the rocks can be heated by simply blowing air through the spaces between the rocks. (If liquid is used in the collectors, a more elaborate heat-exchange mechanism is required.) Rock storage can be both simple and inexpensive, but designing an optimum system can be difficult since the performance is affected by the shape, size, density, specific heat, and other properties of the rocks used. 23

[22] F Molz Department of C ivi l Engineering, **Au** burn University, **private communication, November 1977**

[23] W D Eshleman, et, al., ***A*** *Numerical Simulation of Heat Transfer in Rock Beds,* ISES, Proceeding of the 1977 Annual Meeting, p. 17-21.

It may also be possible to store large quantities of sensible thermal energy in underground rock formations using a technique which is essentially the solid-state equivalent of the aquifer storage discussed previously. A number of schemes have been proposed for storing energy in this way:[24,25]

- Digging deep parallel trenches into dry earth (or land which is "dewatered" with a pumping well) and filling these trenches with crushed rock. The crushed rock would be heated from a series of distribution pipes buried with the crushed rock, and heat would be removed by blowing air through similar buried pipes.
- Excavating a large area in sandy soil, depositing a layer of material which can prevent ground water from entering the excavation, and filling part of the excavation with crushed rock. An insulating layer would be placed on top of the rock. (This scheme would lead to a significant change in local topography.) Hot air distribution pipes would be buried in the layer of crushed rock.
- Digging tunnels through layers of sandstone or other porous rock in naturally occurring formations. I n one proposal, the rock is heated by sending hot air through pipes located in an intermediate plane in the rock formation. The air passes through the rock formation and is returned through a piping network on planes above and below the injection plane. Heat is removed in the same way when cold air is introduced in the intermediate plane.
- Caverns of crushed rock could be produced by drilling and blasting underground rock layers if the rock layers available were not suitably porous. Preliminary calculations have indicated that performance of the storage bed would be optimum if the rock particles are about 0.3 cm (0.1 inch) in diameter.

It has been estimated that energy could be stored in these formations at temperatures up to 500'C (9320 F). The cost of the system will vary from site to site, but it may be possible to build devices for $0.03 to $0.09/kWh and $150 to $400/kW, if the storage cycle involves removing air at a temperature of 500'C above the temperature at which it was injected.[26] If a temperature swing of only 50'C is used, storage costs would be on the order of $.30 to $.90/kWh.

Latent" Heat, Low=Temperature Storage

An enormous variety of phase-change materials have been examined for possible use in low-temperature storage systems .[27,28,29,30] The properties of a selected set of these materials are summarized in table XI-2. Phase change materials used in low-temperature applications are of three basic types: inorganic salt compounds, complex organic chemicals (such as paraffins), and solutions of salts and acids. Water itself can be used as a latent-heat storage medium to store "coolness;" the latent heat of melting ice is 0.093 kWh/kg.

A successful latent-heat system must have the following properties: [31]

---

[24] M P Hardy, et al , ' Large Scale Thermal Storage in Rock Construct Ion, Utilization and Economics, " *12th IECEC Conference,* p 583.

[25] MRiaz, et al., "High Temperature Energy Storage in Native Rocks, " *Proceedings,* the I SES joint Conference Sharing the Sun–Solar Technology in the Seventies, Volume 8, p 123 (1976) Pergamon Press

[26] Hardy, op. cit , p. 590.

[27] Maria Telkes, *Thermal Energy Storage,* IECEC 1975 Record, p. 111

[28] D. V Hale, et al , Phase Change Materials Handbook, NASA-CR-61 36. Lockheed Missiles and Space Company, September 1971

[29] C L Segaser, *MIUS Technology Evaluation: Thermal Energy Storage Materials and Devices* (ORN L-HUD-M IUS-23), August 1975, p. 28

'OH C. Fisher, *Thermal Storage Applications of the IceMaker Heat Pump, Oak Ridge National Laboratory, 9-30-76.* (Paper prepared for presentation at Pennsylvania E lectric Association, Harrisburg, Pa.)

[31] Harold Lorsch, *Conservation and Better Utilization of Electric Power by Means of Thermal Storage and Solar Heating – Final Summary Report,* NSF/RAN N/SE/G I27976/PR73/5, july 31, 1975 Some phrases taken verbatim.

Table X1-2.—Phase-Change TEC Materials in the Low-Temperature Regime With Melting Points Above 75°C [167°F]

TEC material	Class	Lab test*	Melting point °C	Melting point °F	Latent heat of phase change (Cal/G)	Latent heat of phase change (Btu/lb)
$Mg(NO_3)_2$ 6 H_2O	inorganic compound	S	89	192.2	NA	NA
$Ba(OH)_2$. $8H_2O$	inorganic compound	G	82	179.6	63.5	114.3
NH_4Br(33.4%) $CO(NH_2)_2$	inorganic eutectic	G	76	168.8	NA	NA
Acetamide (CH_3CONH_2)	organic compound	s	82	179.6	NA	NA
Naphthalene ($C_{10}H_8$)	organic compound	G	83	181.4	35.3	63.5
Propionamide ($C_2H_5CONH_2$)	organic compound	G	84	183.2	40.2	72.3
51.8% Benzamide ($C_6H_5CONH_2$) 48.2% Benzoic acid (C_6H_5COOH)	organic eutectic	G	83	181.4	30.4	54.7

NOTES NA — not available
'S — satisfactory performance
G — good performance

SOURCE Hoffman (Oak Ridge National Laboratories), prepared for OTA, 1976.

- **A melting point within the desired temperature range.**
- **A high heat of fusion (this reduces storage volume and material demands).**
- **Dependability of phase change (a melt should solidify predictably at the freezing point and should not supercool).**
- **Small volume change during phase transition (a volume change makes heat-exchange difficult, and can place stress on the storage containers; most materials increase in density when they freeze, but water and gallium alloys expand).**
- **Low-vapor pressure (some materials have high-vapor pressures near their melting points, placing stress on containers).**
- **If the latent-heat medium is a mixture, it must remain homogeneous; i.e., its parts should not settle out.**

It has proven difficult to combine all of these properties in a single system.

The rate at which energy can be withdrawn from many phase-change storage systems is limited by the fact that the storage medium usually begins to solidify on the surface of heat exchangers; the layer of solid material acts as an insulator. Designs for increasing effective heat exchange areas have usually involved "microencapsulation" (in which the storage medium is separated into a number of small containers suspended in a heat exchange medium) or shallow trays.

The General Electric Company has recently proposed another approach. In their system, the phase-change materials is contained in a series of long, cylindrical containers which rotate (typically at 3 rpm) to keep the material mixed and to maintain a uniform temperature throughout the mixture. GE claims that with this approach, solidification begins at a number of nuclei distributed throughout the liquid and not on the walls of the cylinders,

INORGANIC SALT COMPOUNDS

Inexpensive salt mixtures have the potential of requiring up to 100 times less volume for low-temperature storage than a simple sensible-heat, water-storage system. The disadvantage of all such systems compared

with simple water storage is the need to use more complex heat exchangers, nucleating devices, and corrosion-resistant containers (if corrosive salts are used). The two categories of salt solutions which have received the most attention are inorganic salt hydrates and clathrate and semiclathrate hydrates.

If the concentrations of the components of a mixture are adjusted so that the mixture attains its lowest possible melting point, the mixture is termed "eutectic. " In such a mixture, melting occurs at a constant temperature. 32

Inorganic salt hydrates are crystalline compounds of the general form $S \cdot nH_2O$, where S is an anhydrous salt. The hydrate dissolves when these compounds are heated, absorbing energy.

Clathrate and semiclathrate hydrates are compounds in which water molecules surround molecules of materials which do not strongly interact with water. These materials melt in the range of 00 to 30'C (30 to 860 F) and have heats of fusion which are in the range of 78-118 Btu/lb; most have not been studied in detail. 33 Materials suitable for use in connection with space heating (melting points in the range of 30° to 48'C (86° to 1180 F) and heats of fusion in the range of 66 to 120 Btu/lb.) include $Na_2SO_4 \cdot 10H_2O$ (Glauber's salts), $Na_2HPO_4 \cdot 12H_2O$, and $CaCl_2 \cdot 6H_2O$. Materials suitable for storing "coolness" (melting points in the range of 130 to 18'C (550 to 750 F) and heats of fusion in the range of 70 to 80 Btu/lb.) include eutectic salt mixtures such as mixtures of $Na_2SO_4/10H_2O/NaCl$, and $Na_2SO_4/10H_2O/KCl$.[34]

[32] See, for example, Walter J. Moore, *Physical Chemistry,* 3rd edition, Prentice-Hall I, 1964, p. 148.

[33] M. Altman, et al., *Conservation and Better Utilization of Electric* Power *by* ***Means of Thermal Energy Storage*** *and Solar* ***Heating,*** *Final* ***Summary Report,*** NSF/RANN/SEGI27976/PR73/5, University of Pennsylvania, National Center for Energy Management and Power, July 31, 1973, **pp. 6-51**

[34] Segaser, **op. cit.,** p. **30.**

'ST. E. Johnson, MIT, private communication, May 1978, R. Stepler, "Solar Lab Soaks Up Sunshine With Exotic New Materials," *Popular Science,* June 1978, pp. 96-98.

Many of the clathrates examined do not appear to melt in temperature regions useful for heating or cooling applications.

A technique for encapsulating a proprietary mixture of Glaubers salts, fumed silica, and other chemicals (melting temperature 730 F (230 C) in a polymer concrete shell has been developed by the Massachusetts institute of Technology working in cooperation with The Architectural Research Corporation of Livonia, Mich., and the Cabot Corporation of Billerica, Mass. The storage elements are formed into units the size of standard ceiling tiles (2 ft x 2 ft x 1 in) and are designed to be installed as ceiling tiles in passively heated solar buildings. They store about 0.7 kWh/m^2 of ceiling area, and should sell wholesale for about \$32/m^2 in initial production (about 13 times the cost of standard acoustical ceiling tiles). The devices thus have an effective storage cost of \$39/kWh storage capacity. MIT does not expect prices to fall rapidly; apparently material costs already represent a large fraction of the cost of production. While the tiles can be hung on hangers similar to those now used for acoustical ceiling tiles, their greater weight, which is 54kg./m^2, requires the use of heavier gauge hangers.

The tiles, which will be marketed under the trade name "Sol-Ar-Tile," have been demonstrated in a 900 ft^2 passively heated solar house built by MIT's Architecture Department. Timothy E. Johnson, who heads the project, reported in May 1978 that tiles suffered no deterioration after accelerated lifetime testing, in which the tiles underwent 2,400 freeze-thaw cycles. The building uses specially designed window blinds which refleet sunlight from the southern windows to the ceiling. Johnson claims that the phase change medium is nontoxic. 35

ORGANIC COMPOUNDS

Organic compounds can also be used for storing energy as latent heat. These materials have the advantage of relatively high heats of fusion, and few of the materials examined present problems of supercooling or high vapor pressures. Unfortunately, some

of the most attractive organic materials under consideration (e. g., paraffins) have a relatively large volume change upon melting (nearly 10 percent in some cases), are flammable, and can cause stress cracking if the containment vessel is not constructed from a material as strong as steel. Experimental paraffin storage systems, however, have been operated successfully. [36]

Materials suitable for heating include artificial spermaceti (manufactured by Lipo Chemicals) and paraffin wax (possibly mixed with carbon tetrachloride). These materials melt in the range of 350 to 50'C (95 °to 1220 F), and have heats of fusion on the order of 40 to 90 Btu/lb.[37] Materials such as Acetamide (CH_3CONH_2), Naphthalene ($C_{10}H_8$) and Propionamide ($C_2H,COHN_2$) can be used to store energy at slightly higher temperatures, melting in the range of 820 to 83'C (180 °to 1830 F) and having heats of fusion in the range of 55 to 72 Btu/lb. [38] Materials suitable for storing coolness include paraffins and olefins with freezing points in the range of 30 to 80 C and heats of fusion in the range of 65 to 85 Btu/lb.[39]

Concentrated Solutions

Concentrated solutions can also be used to store low-temperature energy without a phase change. It has been suggested, for example, that solutions of LiBr utilized in absorption air-conditioner systems could be used to store solar energy in the "generator" portion of an absorption unit. [41 42 42] It has also been proposed that a device similar in operation to an absorption air-conditioner could be used to provide heat from such storage, using an "absorption heat pump."[43] All such systems would require three storage tanks: one for the concentrated solution, one for water, and one for the dilute solution. The storage would not require insulation.

It is believed that approximately 65 Btu/-pound of LiBr) could be stored in a system which uses sunlight to distill a solution of 66 percent LiBr to 54 percent.[44] A major drawback of using LiBr is the high cost of the material, but further study may reveal other less expensive salts with acceptable properties.

SALT STORAGE FOR OSMOTIC PRESSURE ENGINES

Energy can be generated from the osmotic pressure developed between salt solutions and freshwater. A system based on this principle is illustrated in figure XI-9. The concentrated saline solutions produced for use in such equipment can be stored in uninsulated tanks which can be quite inexpensive. A cubic meter of a salt solution comparable to water from the Dead Sea (27 percent salt by weight) can produce 1 to 2½ kWh in a reverse osmosis engine. " Figure XI-5 indicates that large tanks can be purchased for less than $20/m^3$, and therefore brine storage can be achieved for about $8 to $20/kWh (or more if storage must also be provided for the freshwater distilled from solution). The use of covered ponds could result in substantially lower storage costs.

SALT SOLUTIONS FOR ENGINES USING LATENT HEAT OF MIXING

Engines can be operated from the latent heat released when concentrated solutions

"A D Fong and C W Miller, "Efficiency of Paraf - fin Wax as a Thermal Energy Storage System, " *Proceedings,* the 1977 Annual Meeting of I SE S, p 16-6,

[37]Ibid , p 33

[38]G A Lane, et al , *Solar Energy Subsystems Employing Isothermal Heat Storage Materials,* ERDA- 117, UC-94a May 1975

[39]Segaser, op cit , p 33

[40]J Baughn and A Jackman, *Solar Energy Storage Within the Absorption Cycle.* Paper delivered to the ASME meeting in New York, November 1974

[41]M Semmers, et al , *Liquid Refrigerant Storage in Absorption Air-Conditioning.* Paper delivered to ASME meeting in New York, November 1974

[42]E H Perry, "The Theoretical Performance of the Lithium-Brom ide-Water intermittent Absorption Refrigeration Cycle, " *Solar Energy 17* (5), November 1975, p 321

[43]Letter from Dr. Gary Vliet (University of Texas, Austin) to Dr Albert R Landgrebe (ERDA), Jan. 5, 1975

[44]Gary Vliet, ibid,

[45]S Loeb, et al., "Production of Energy from Concentrated Brines by Pressure Reduced Osmosis: I I Experimental Results and Projected Energy Costs, " *Journal of Membrane Science, (1),* p. 264(1 976)

Figure X1-9.—Osmotic Pressure Engine

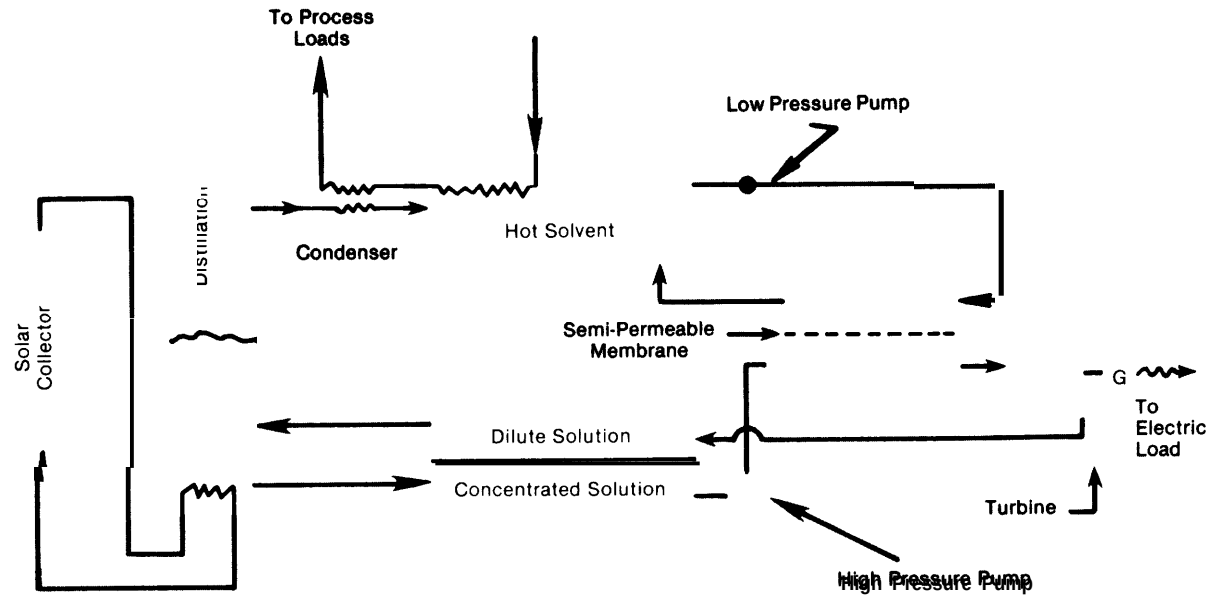

SOURCE: OTA.

of some types of salt are mixed with water (see figure XI-10). Energy is released when water is introduced and aqueous solutions are formed. 'b A study of this effect has estimated that if energy is stored in the form of dry NaOH, the density of the energy stored is 135 kWh/m^3, and if energy is stored in the form of dry $ZnCi_2$, $CaCl_2$, $MgCl_2$, LiBr, and LiCl, the energy storage density is about 80 kWh/m^3.

CHEMICAL REACTIONS

There is growing interest in the possibility of storing energy for low-temperature applications in chemical form, but work is in a very preliminary stage and no practical systems have yet emerged. " 46 A recent exploratory survey indicated that photochemical reactions can be competitive with other low-temperature thermal storage systems if they are capable of 25-percent conversion efficiency and energy storage at more than 158 Btu/lb. (88 cal/g), or 40-percent efficiency and 81 Btu/lb. (45 cal/g).

One of the few low-temperature reactions which has been studied involves the use of metal hydrides. The reactions are of the general form $M + (x/2)H_2 \rightleftarrows MH_x$, where M is a metal or alloy such as $LaNi_5$, $SmCo_5$, or FeTi. These materials are capable of storing between 45 and 92 Btu per pound of hydride (0.029 to 0.059 kWht/kg), if storage temperature is held at 2000 F and initial hydride temperature is 700 °F.[49]

Energy is stored when the hydride is heated, releasing the gas, and recovered when hydrogen recombines with the metal. Recent investigations at the Argonne Na-

"N. Isshiki, et al., "Energy Conversion and Storage by CDE (Concentration Difference Energy) Engine and System, " Proceedings, the 12th Intersociety Energy Conversion Engineering Conference, Washington, D.C., Aug. 28-Sept. 2, 1977 (American Nuclear Society, La Grange Park, ill.), page 1117.

[47]G S. Hammond, "High Energy Materials by Charge Transfer and Other Photochemical Reactions, " *ACS 122nd Meeting,* San Francisco, Cal if., September 1976.

[48]S. C. Talbert, et al., "Photochemical Solar Heating and Cool ing," *Chemtech,* February 1976, p. 122.

[49]G. G. Libowitz, "Metal Hydrides for Thermal Energy Storage, " ***Proceedings,*** the 9th Intersociety Energy Conversion Engineering Conference, San Francisco, Cal if., Aug. 26-30, 1975, p. 324 (Quoted in Segaser, pp. 37-38.)

Figure XI-10.— Heat of Mixing Engine

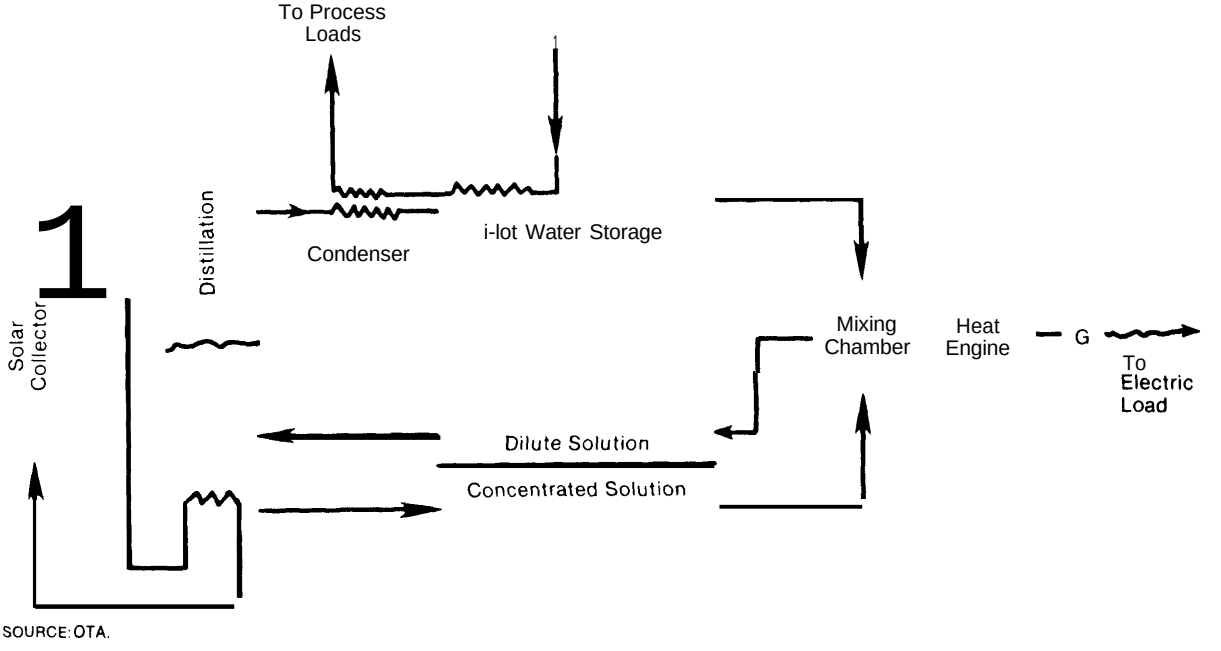

SOURCE: OTA.

tional Laboratory have demonstrated the feasibility of hydride storage for both heating and cooling applications [50]

The possible costs of several of the low-temperature thermal storage systems discussed in the previous sections are summarized in figure XI-11. The techniques used to compute these costs are explained in appendix XI-B,

THERMAL STORAGE AT INTERMEDIATE AND HIGH TEMPERATURES

Table XI-3 lists the properties of some of the materials which can be used to store thermal energy at high temperatures. Rock storage was treated in the previous section. The following discussion examines sensible heat storage in refractory bricks, iron ingots, and hot oils.

[50]James H Swisher, Director of the Division of Energy Storage Systems, Of flee of Conservation, ERDA, letter to OTA dated Mar 30, 1977

Refractory Bricks

Devices capable of storing energy in magnesium oxide bricks at temperatures up to 600 °C (1,1120 F) have been commercially available in England and Western Europe for many years; the original patents date back to 1928. They are in buildings so that customers can charge the storage from the relatively inexpensive electricity available in these areas at night; during the day, homes and offices can be heated from the systems in the same way that a baseboard resistance heater would be used. In 1973, both Great Britain and West Germany had installed enough such devices to provide nearly 150,000 MWh of storage capacity[51,52] for leveling the loads placed on their electric utilities. Devices such as the one shown in figure XI-12 are beginning to appear on the U.S. market in areas where *time-of-day*

[51]Gunter Mohr, *Electric* Storage *Heaters*, AE G-Telefunken Progress, (1970), 1, p 30-39

[52]J G Ashbury and A. Kouvalis, *Electric* Storage *Heating: The Experience in England and Wales and in the Federal Republic of* Germany, ANL/E S-50(1976)

Figure XI-11 .— Low-Temperature Thermal Storage Cost per kWh$_t$ Versus Storage Capacity

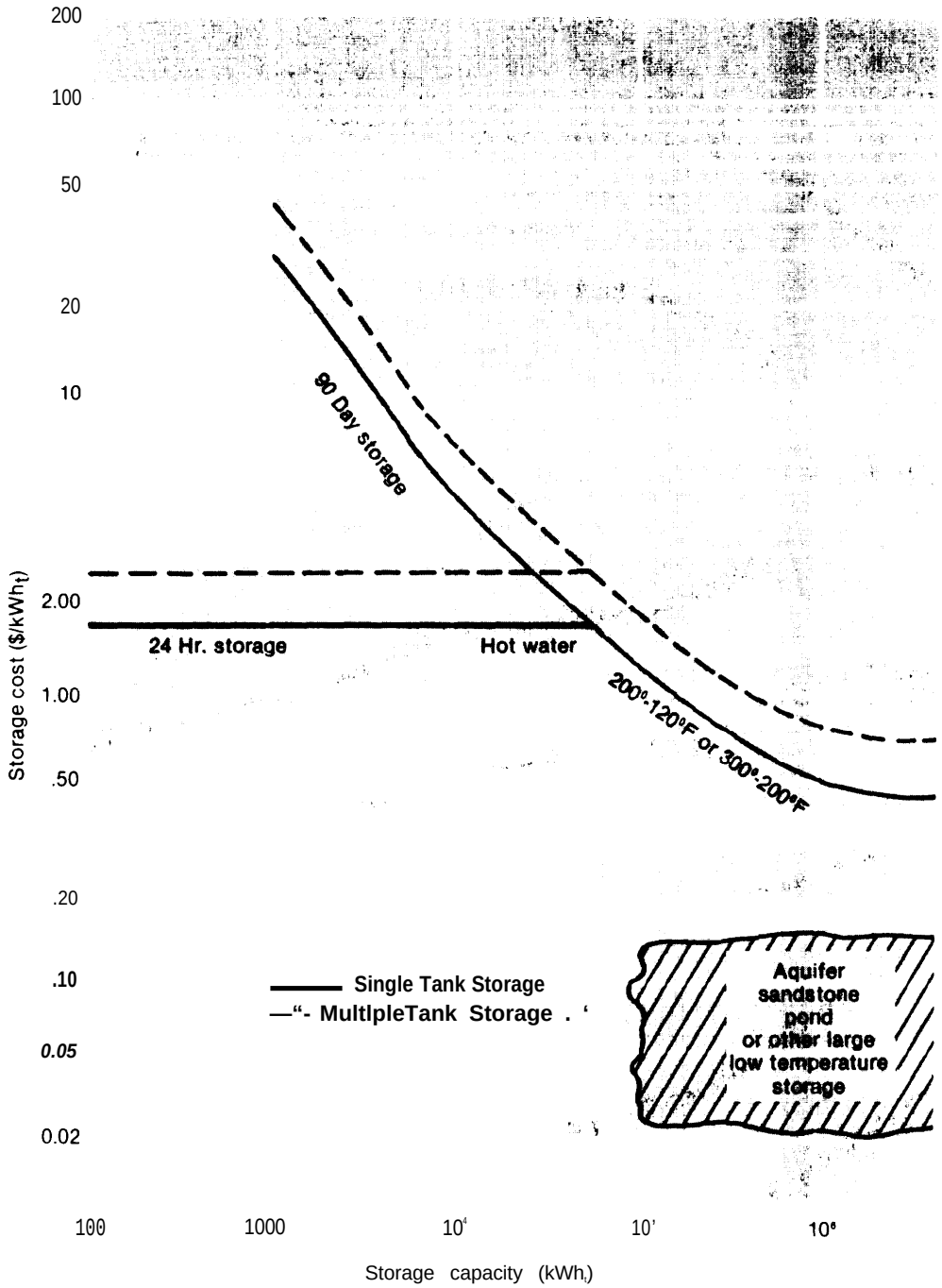

NOTE:
The storage units would lose only about 5 percent of the energy stored in the Interval Indicated. This cost is based on precast concrete and coated steel, and excludes 25 percent O&P

Table XI-3.—Candidate High-Temperature Thermal-Energy Storage Materials Without Phase Change

Sensible-heat storage between 77° F and 900° F

Material	Density (lb/ft^3)	Btu/lb	Btu/ft^3	Price (1971 $) ($/100 lb)	output (Btu/$)
Al	168	200	34,000	29.00	690
$Al_2(SO_4)_3$	169	202	34,000	3.11	6,500
Al_2O_3	250	200	50,000	2.20	***9,100***
$CaCl_2$	135	135	18,000	2.20	6,000
MgO	223	208	46,000	2.80	7,400
KCl	124	140	17,400	1.65	8,500
K_2SO_4	167	180	30,000	1.10	16,400
Na_2CO_3	160	265	42,500	4.00	6,600
NaCl	136	180	24,500	1.33	13,500
Na_2SO_4	168	247	41,500	1.50	16,400
Cast Iron	484	102	49,500	10.00	1,000
Rocks	140	160	22,500	**1.00**	16,000

SOURCE M Altman, et al *Conservation and Better Utilization of Electric Power by Means of Thermal Energy Storage and Solar Heating, Phase I Summary Report*, NSF G127976, University of Pennsylvania National Center for Energy Management and Power, Oct 1, 1971, pp. 2-10

rates have been introduced. The units typically sell for $20 to $40/kWh. [53]

Some thought has been given to using these bricks to provide high-temperature storage for a solar-powered gas turbine system. In one proposal, helium from a receiving tower would be passed through a pressure vessel containing refractory bricks, heating the bricks to about 530°C (986 °F). It is estimated that such a device could be constructed for $11 to $14/kWht. 54

Steel Ingot Storage

A system for using steel or cast-iron ingots to store high-temperature energy for use in a steam electric-generating plant has been proposed by Jet Propulsion Laboratory (JPL). [55 56] This device, illustrated in figure XI-1 3, consists of an assembly of pipes with rectangular external cross sections. Superheated steam is passed through the pipes for charging and discharging. It should also be possible to maintain a significant temperature gradient along the length of the storage unit for several days (see appendix XI-B). The predicted performance of a large device is illustrated in figure XI-14. Like the MgO (magnesium-oxide) storage system, this device has the advantage of great simplicity, it has virtually nothing to wear out, no heat exchangers to clog, and no scarce or toxic materials are required. It has an advantage over the brick storage system in that a pressure vessel is not required to contain the heat-transfer fluid —the steel pipes provide the needed containment. For this reason, the cost should be slightly less expensive per unit of energy stored. 57

It should be possible to build a steel ingot storage system with relatively little develop-

[53] J G Ashbury, et al., **"Commercial Feasibility of Thermal Storage** in Buildings for Utility Load Leveling, " presented to the American Power Conference, Apr 18-20,1977, Chicago, Ill.

[54] W D Beverly, et al, "1 ntegration of High Temperature Thermal Energy Storage into a Solar Thermal Brayton Cycle Power Plant, " *12IECEC* Conference, p 1195

[55] Beverly, op cit , p 1199

[56] Program Review, Comparative Assessment of *Orbital and Terrestrial/ Central Power Systems,* October 1975- January 1976, JPL, p 16

"R H Turner, J PL, "Thermal Energy Storage Using Large Hollow Steel Ingots, " Sharing *the Sun: Solar Technology in the Seventies,* joint Conference, American Section, International Solar Energy Society and Solar Energy Society of Canada, I nc , Winnipeg, Canada, Aug. 15-20, 1976, Vol 8, pp. 155-162.

Figure XI-12.—A High-Temperature Thermal Storage Device Designed for Residential Use

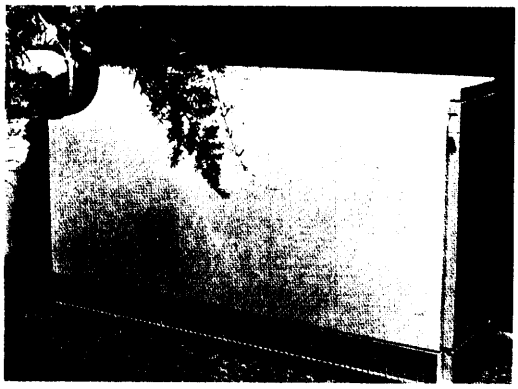

A storage/heating unit installed in a home

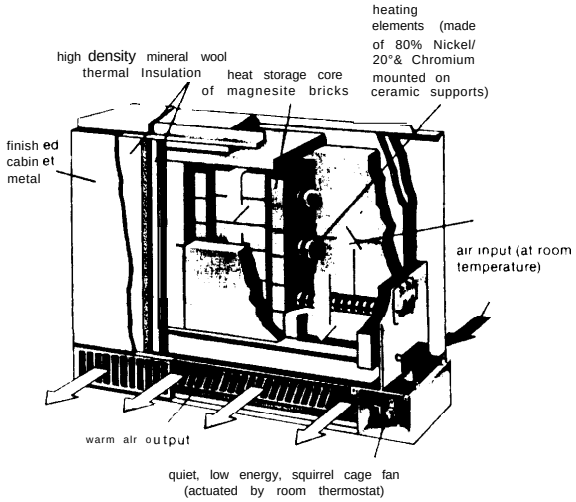

An interior view of the unit showing the magnesium bricks, heating elements and air blower

SOURCE Control Electric Corporation Burlington, VT

ment work since most of the properties of the system can be computed with considerable precision. Since the system uses high--pressure steam, considerable care must be taken if it is used in onsite applications, but existing boiler codes should be able to ensure adequate safety. Lower pressures can be employed if the system uses a heat-transfer fluid other than steam.

Figure XI-13.— Steel-Ingot, Sensible-Heat Storage System

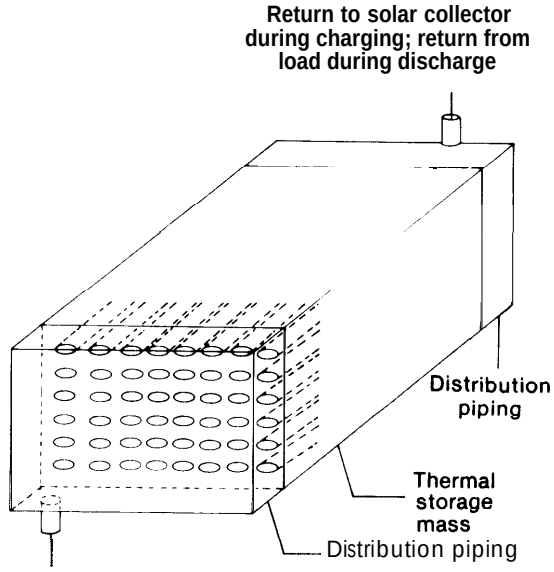

Figure XI-1 4.—Steel-Ingot Temperature Profiles at Various Times in a Typical Cycle

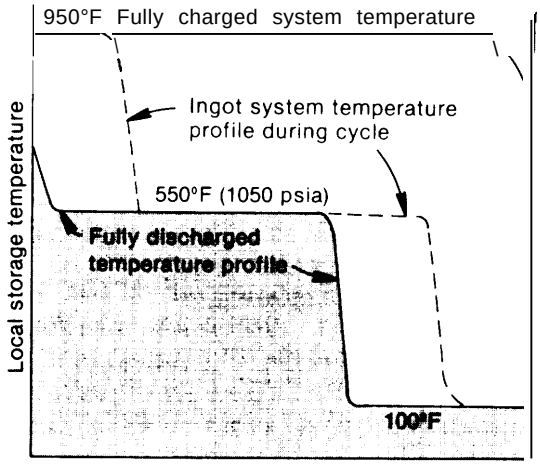

SOURCE:
R. H. Turner (JPL), "Thermal Energy Storage Using Large Hollow Steel Ingots," ***Sharing the Sun: Solar Technology in the Seventies.***
Joint Conference, American Section, International Solar Energy Society and Solar Energy Society of Canada, Inc. Winnipeg, Canada, Aug. 15-20, 1976, Volume 8, page 160.

It may be possible to reduce the cost of the system by replacing some of the volume of metal with concrete. Concrete costs about a third as much as steel and could easily be formed around a matrix of separate steel pipes. The practical difficulties of constructing such a system have not been evaluated, however, The performance of the system could be degraded significantly if the concrete separated from the steel tubes; this may create problems even though concrete and steel have nearly the same coefficients of expansion. Another difficulty would be the relatively poor heat transfer between concrete and steel. Concrete itself has low conductivity, and cracks could further reduce its conductivity.

Heat-Transfer Oil Thermal Storage

Some of the sensible-heat storage systems utilize a mixture of rocks and a heat-transfer fluid such as Therminol. The properties of some common commercial heat-transfer liq-u ids are listed in table XI-4. Sandia Laboratories in Albuquerque chose a system using Therminol-66 and rocks for storing energy in its total energy *system.* This system, shown in figure XI-1 5, has been operated successfully since early 1976. A mixture of Caloria HT43 and granite rock storage was chosen by McDonnell-Douglas for storing energy generated by their central receiver design. Martin-Marietta chose to use a sensible-heat storage system with two stages — a high-temperature stage for superheating, using HITEC as the storage medium, and a low-temperature stage using a heat-transfer oil. Each stage has two tanks for high performance.

All heat-transfer oils share a common set of problems. They all degrade with time, and their degradation is increased rapidly if they are operated above their recommended temperature limits for any length of time. This degradation requires a filtering system and means that the relatively expensive oils must be continually replaced. The oils also can present safety problems, since they can be ignited by open flames at temperatures in the range of 3000 F (fire point) and have a high enough vapor pressure to sustain combustion at temperatures in the range of 600 c to 1,0000 F (ignition temperature), This means that great care must be taken to ensure that the material is not overheated, Dikes will be needed to prevent the material from spreading if a leak should occur. Some systems require an inert gas (such as nitrogen) over the liquids in the tanks to inhibit reactions which might degrade the storage material. The behavior of the rock-oil mixtures over long periods of time remains an open question, since little experimental evidence is available. The rocks may tend to crack, and the apertures between them may clog with degraded oil.

Refined Fuel Oil Thermal Storage

A thermal storage system proposed by EXXON eliminates the problems of degradation and clogging by using a relatively inexpensive fuel oil without rocks.[58] This system uses specially refined oil that does not degrade with time, but it can only be used at up to 530° F (277 'C). The oil is estimated to cost $146/m ^{3} (installed, excluding operations and maintenance) and, if necessary, can be used as fuel at any time.[59] Its specific heat is 0.795 kWh~Jm^3"C.bo

An EPRI study estimates the installed cost of insulated tankage, including an inert gas system to exclude oxygen, to be $91/m^3 of oil for a two-tank system. Oil handling facilities, such as pumps, piping, and heat exchangers, are power related, rather than energy related, and cost $288 per installed kw_{th} of capacity .61

---

[58] An Assessment of Energy Storage Systems Suitable for Use by Electric Utilities, EM-264, EPRI Project 225. ERDA E (11-1} 2501, Final Report Prepared by Public Service E lectric and Gas Company, Newark, NJ

[59] Ibid , pp 4-40

[60] Ibid , pp 3-48

[61] Ibid , pp 4-41 Converted from $144 kW_e using O 4 kWe kWth and 1 25 O&P factor

Table XI-4.—Commercial Organic and Inorganic Heat-Transfer Agents

	Therminol-55[a]	Therminol-66[5]	Caloria-HT-43[5]	Dowtherm-A[5]	Humble-therm 500[5]	HITEC[5]	Refined fuel oil[b] (see text)
Producer	Monsanto[c]	Monsanto[c]	EXXON[c]	Dow Chemical[d]	Humble Oil	E. 1. Dupont	EXXON[c]
Highest usable temp ("C) = T_{max}	316	343	316	260	316	500	277
Lowest usable temp:							
(°F)	601	649	601	500	601	932	531
("c)	-18	-4	—	-11	-21	142	—
(°F)						288	
Fire point (°C)	210	193	—	135	246	—	—
Autoignition temp(° C)	354	374	404	621	—	—	—
Specific heat (Btu/lb °F)3 (or cal/gm°C)	0.72	0.655	—	0.537	0.7165	0.4	***0.70***
Viscosity (lb/ft-hr)[e]	1.1	0.649	—	0.65	1.01		—
Thermal conductivity (Btu/hr-ft° F [e]	0.065	0.0612	—	0.0645	0.0655		***0.68***
Density (lb/ft^3)[e]	43	50		53	41.3	112	—
Heat capacity (Btu/ ft^3° F)[e]	31	32.8		28.5	29.6	44.8	38.21
Cost ($/lb)	0.38	0.81	0.26	0.71		0.25	
cost ($/$ft^3$)	16.34	40.50		37.63		28.00g	4.13
Mills/Btu (assuming $\Delta T = T_{max}$ - 50°C and perfect thermal gradient)	1.1	2.3	S.2[f]	3.5		0.99	0.26
Mills/Btu (assuming complete mixing and allowing T_{max} to fall to (T_{max}/2) + 25" C)	2.2	4.6	6.4	7.0		2,0[h]	0.53

a Compiled by Hoffman (ORNL) and Tas Bramlette (Sandia, Livermore)

b Energy in 011," IEEE Power Engineering Society Summer Meeting, Portland, Oreg., July 1976

c Requires nonoxidizing cover gas

d Requires pressurization for temperatures above 260°C

e Property at maximum usable temperature.

f $\Delta T = T_{max} - 83°C$

g $\Delta T = T_{max} - 150°C$

h ΔT_{max} falls to $(T_{max}/2) + 75°C$

At least one design for such a hot-oil energy storage system for use with a 1,000 MW_e nuclear powerplant has already been completed, and the EPRI study classifies this technique as "a near-term solution with certain economic advantages over other storage systems."[62]

Latent-Heat Systems

Heat-of-fusion systems using inorganic salt mixtures have a distinct advantage for storing energy at high temperatures, since they can reduce storage volumes and provide more energy at constant temperatures. The major disadvantages have been the costs of the materials required and the problem of developing adequate heat transfer between the storage material and the working flu id. Two designs which have been used in devices designed to store energy for space conditioning are illustrated in figures XI-16 and XI-17, The Comstock and Wescott design uses relatively inexpensive materials: NaOH mixed with corrosion inhibitors. The unit shown consists of six modules containing sodium hydroxide which was heated with electricity. The unit has been redesigned to use steel pipes rather than the panels shown. [63] [64] [65] A similar approach has been proposed by JPL for use in a central station powerplant. I n their approach, a bundle of tubes is imbedded in a long cylindrical tank (in the central station design, the tanks were 60 feet long and 12 feet in diameter) filled with sodium hydroxide. The steam or other heat-transfer liquid is sent through the tubes to extract or to supply energy to the storage medium. The tubes must be closely spaced to permit acceptable rates of heat transfer since sodium hydroxide has a relatively small heat conductivity. JPL estimated that such a system could store 52 MWh_t if the temperature swing were between 6500 and 4000 F and would cost about $13/kWht.Gs A major problem with these systems is that the highly corrosive nature of NaOH (lye) demands expensive containment to prevent leaks.

The Philips Corporation has investigated a number of materials for possible use in a phase-change storage system. Lithium fluoride has received the most attention because of its extremely large latent heat of fusion, but other less expensive materials have also been examined for use in the Philips design. " Other fluoride compounds, for example, have extremely large latent heats.

The properties of a variety of salt compounds which might be considered for use in phase-change storage systems are illustrated in table XI-5 and their thermodynamic behavior is illustrated graphically in figure XI-1 8. It can be seen that the sodium hydroxide material appears to have an advantage in the temperature regime appropriate to conventional Rankine cycle systems, while fluoride compounds (such as the NaF/MgF_2 mixture) appear to have an advantage when used in connection with engines operating at very high temperatures such as Brayton or Stirling cycle devices.

In general, the nitrates and nitrites are relatively inexpensive and do not corrode their containment vessels, but they tend to decompose at temperatures above 4000 to 500 "C. The hydroxide eutectics can operate at high temperatures, but become corrosive and thus require corrosion-resistant alloys. Carbonates have good thermophysical properties, but also decompose at high temperatures unless a cover gas of CO_2 is used in the tanks. Chlorides and fluorides have high specific heats, conductivities, and latent heats,

---

[62] Ibid , pp 3-51 The completed study is referenced as R P Cahn and E W N icholson, Storage of Off-Peak Thermal Energy In Oil, Approved by I E E E Power General Committee, Paper No A76 326-9 Summer 1976

[63] Comstock and Wescott, Inc., "First Step of Heat Storage Research Activity of Heat Storage Systems, " *EEIBull., June* 1959

[64] Comstock and Wescott, Inc , "Promising Heat Storage Material Found Through Research, " *EEIBull.,* February 1962, p 49

[65] R H Turner (J PL), private communication, June 9, 1976

[66] R H Turner (J PL), private communication, June 9, 1976

[67] J Schroder (N.V Philips Aachen Lab), *Thermal Energy Storage, N* V Philips publication

Figure XI-15.—The High-Temperature Heat Storage System at the Sandia Total Energy Experiment

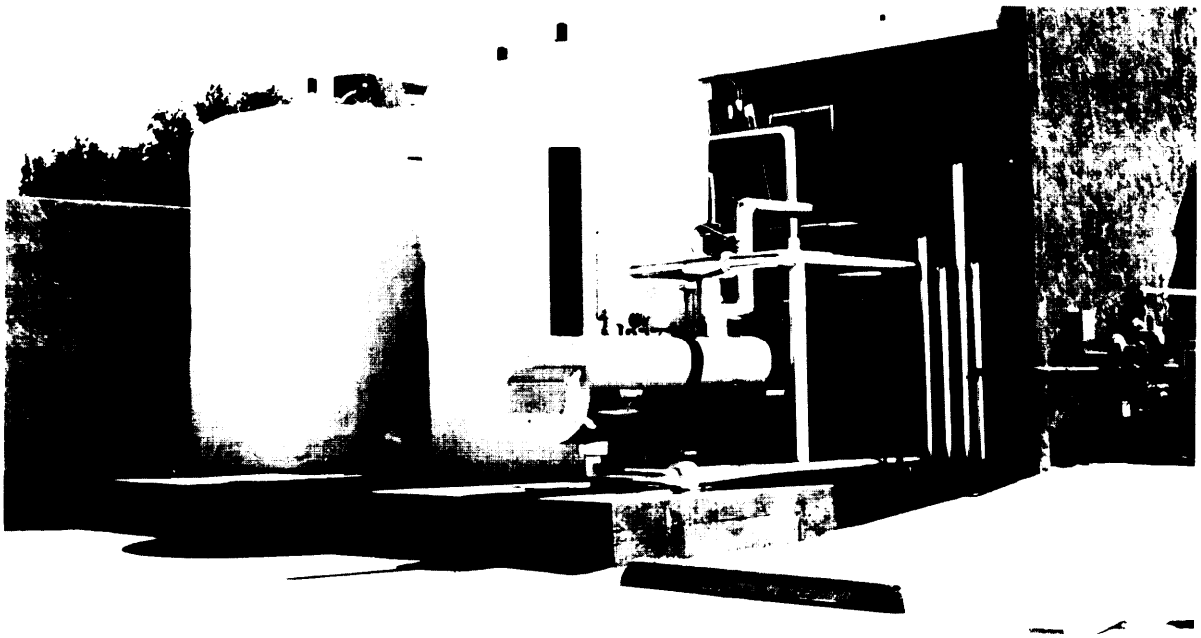

photograph by John Furber

Figure XI-16.– Design of "Therm-Bank" Space Heater

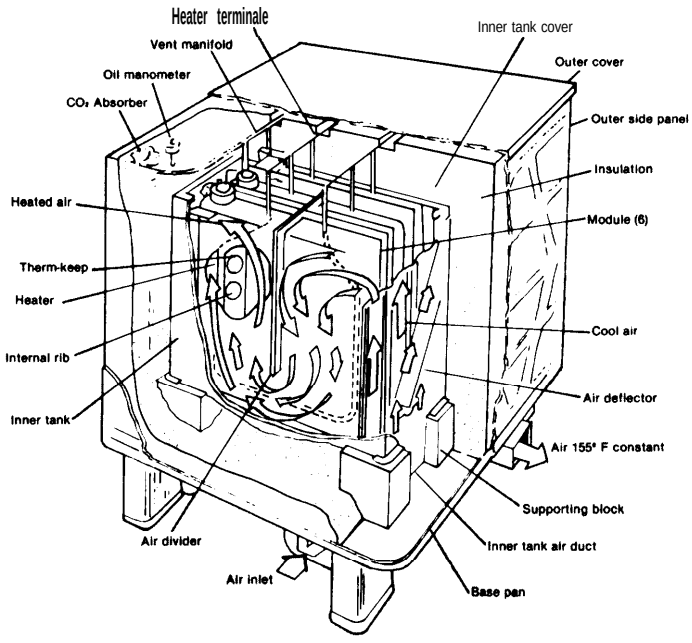

SOURCE
R E Rice, *Thermal Storage Application to Energy Conservation* Comstock and Wescott, Inc April, 1975 Reprinted in Bramlette, et al., SAND75-8083page 42

Figure XI-17.—Philips Latent-Heat Storage System With Vacuum Multifoil Insulation

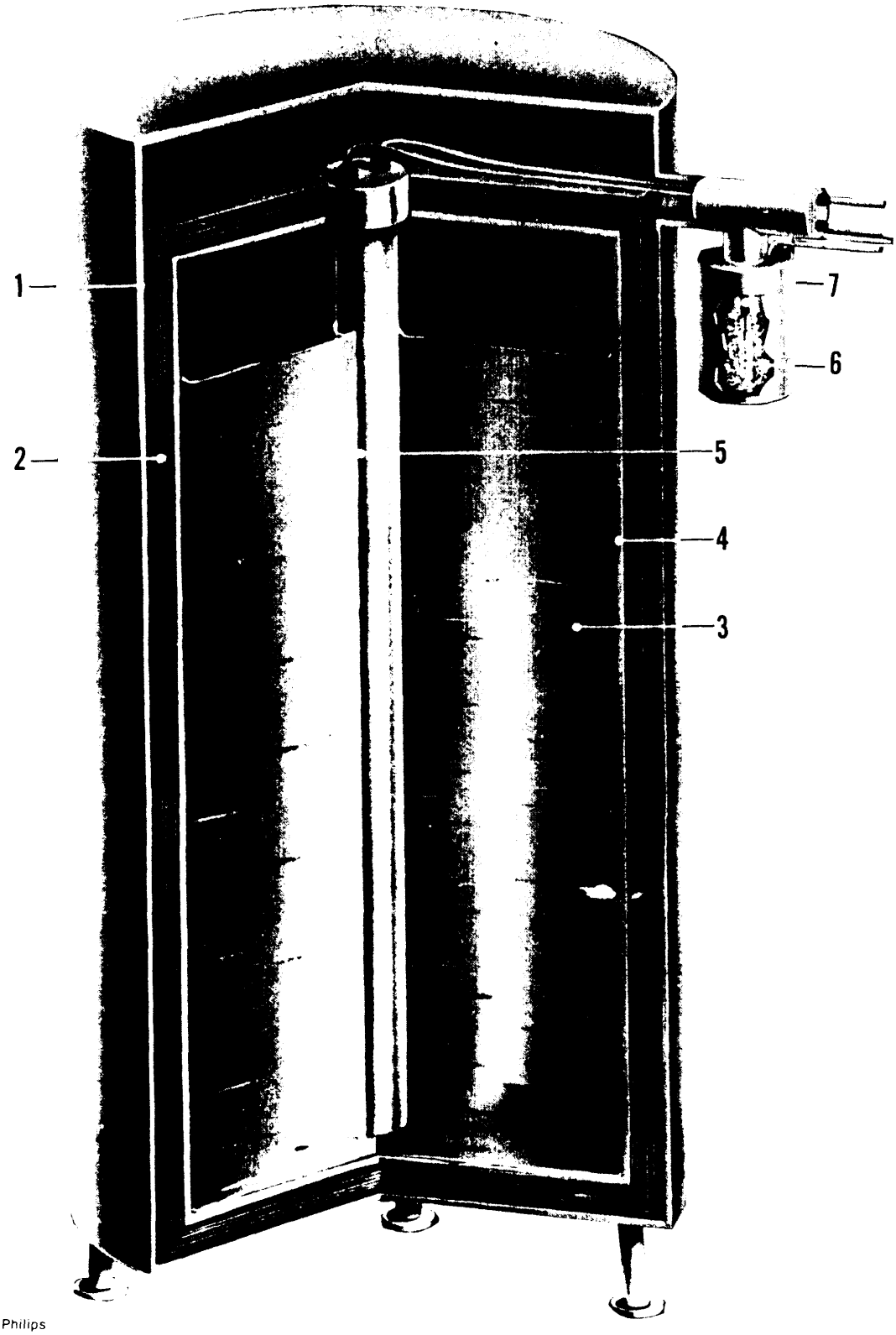

SOURCE N V Philips

Table XI.5.—Properties of Latent-Heat Thermal Storage Materials

Storage material (mole %)	NaOH	NaF/MgF_2 (75/25)	B_2O_3	$LiF/NaF/MgF_2$ 46/44/10	$NaNO_3$	Lif
Melting point 'C.	320a	832b	450c	632d	31Oc	845c
'F. ., .	608	1530	842	1170	590	1553
Density at m.p. (kg/m^3) . (most bulky phase)*	1784 (liq)	2190b (liq)	1571 c (liq)	2105d (liq)	1916c (liq)	1829c (liq)
Heat of fusion ($_A H_{pc}$). (kWh/kg) ., ...	0.0442c 0.0442**	0.174b	0.092d	0.226 (e)	0.0481 (c)	0.290 (c)
Specific heat at m. p. sol id (C_p) (kWh / kg°C)	5.89×10^{-4}a (below 295° C) 5.97×10^{-4}(a) (above 295° C)	4.1 x 1O-4*••	4.48 x 10^{-4}d	4.88 X 10^{-4} (e)	5.06 X 10^{-4} • --	6.69 X 10-4 (d)
Specific heat at m .p., liquid (C_p) (kWh /kg° C)	5.75 x 10^{-4}c	4.07 x 10^{-4}e	5.09 x 10^{-4}d	4.88X 10^{-4}*••	5.058 X 10^{-4} (c)	6.94 X 10^{-4} (c)
Heat capacity (m. p,-50° C to m,p. + 50" C) (kWh/ m^3).....*	262	471	205	578	189	655
Present price ($/kg)	0.55f	1,10-0.55g	0.20	2.20	0.57	5.56h
($/$m^3$)*	983	2400-1200	312	4641	1098	10,161
Material cost ($/ kWh capacity) (m. p. -50" C to m.p. + 50° C) ., .,	3.75	5.10-2.55	1.52	8,02	5.81	1551

• Volume of storage container must be large enough to accommodate most bulky phase
. . Solid/solid phase change at 295° C (563 ° F)
. . . Estimate based on specific heat of other phase

[a] Kubaschewski, O , et al (National Physical Laboratory, Middlesex), *Metallurgical Thermochemistry* Fourth Ed Pergamon Press Ltd , 1967

[b] Schroder, J (N V Philips Aachen Lab), "Thermal Energy Storage Using Fluorides of Alkali and Alkaline Earth Metal s,' Proceed/rigs of *the Symposium on Energy Storage* The Electrochemical Society, Inc , 1976

[c] Janz, G J (Rensselaer Polytechnic Institute), *Molten Salts Handbook* Academic Press I nc , 1967

[d] Wicks, c E and F E Block (U S Bureau of Mines), *Thermodynamic Properties of 65 Elements — Their Ox/ales, Hal/ales, Carbides and Nitrides* Bulletin 605, Bureau of Mines, 1963

[e] Schroder, J (N v Philips Aachen Lab), private communication, Jan 13,1977.

[f] *Chemical Marketing Reporter* Vol 210, No 10, Sept 6, 1976 100 lb drums of U S Pharmacopia NaOH in truckload quantities

[g] $0 55/ kg is a cost estimate made by N V Phillips, based on the use of waste materials from fertilizer manufacturing Present cost is $110/ kg

[h] Lithium Corporation of America quotation, Sept 15, 1976, for 99 5•0 LiF in lots greater than 5 tons This material is proposed for use in Phil ips space heat storage system

m p — melt ng point
(liq)—liquid phase

but tend to be higher in cost and can have corrosive properties. Phosphates and sulfates are very corrosive.

If the latent-heat storage system can be located very close to the collectors, it may be possible to use a heat-pipe system to convey the energy from a collector to storage. Extensive surfaces would have to be affixed to the heat pipes to produce sufficient heat-transfer surface area in the storage medium. This may be feasible since the latent-heat systems are capable of storing a large amount of energy per unit weight. The storage could be mounted directly on a tracking dish, or it could be physically close to an engine mounted at the top of a tower.

Heat pipes operate most effectively if their working fluids have pressures in the range of 1 to 10 atmospheres. Both sodium and potassium have these pressures in temperature ranges of 6000 to 1,000 "C. The technology of sodium-vapor heat pipes has

Figure XI-18.—Thermodynamic Behavior of Candidate Latent-Heat Storage Salts

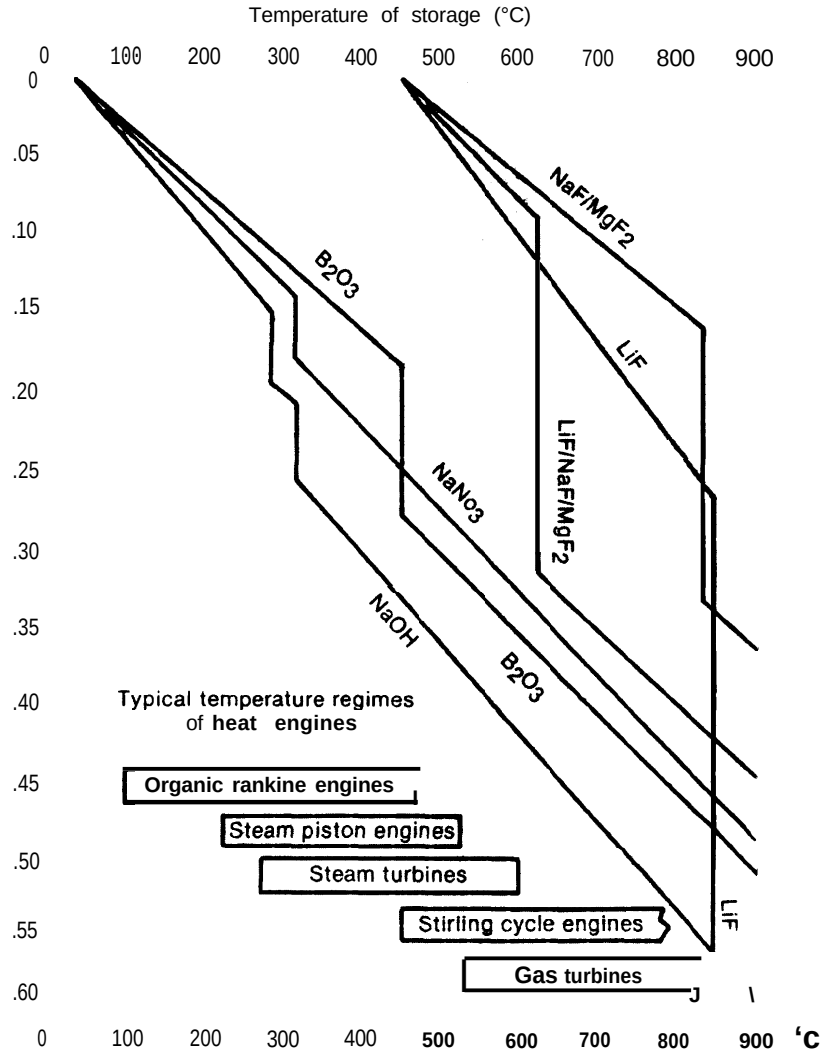

SOURCE Table XI 7

been thoroughly investigated, and pipes made of relatively low-cost "type-304" stainless steel are predicted to have lifetimes of 10,000 hours. " [69] This lifetime corresponds to only a little more than a year of continuous operation for a generating system, and further improvements are needed if an acceptable generating system is to be designed. Such improvements are expected, but design research and much more operating experience is needed.

A Philips design employing a heat-pipe and a phase-change storage system is illustrated in figure XI-19. When the storage is being "charged," the liquid sodium flows to the collector where it is vaporized and returns as a gas to the storage vessels. (Electric pumps for moving sodium without moving

[68] G A A Asselman, et al , "Heat Pipes, " Philips *Tech.* Review, Vol33, No 4 (1970), p 104
"C A A Asselman, et al , "Heat Pipes, " *Philips Tech Review,* Vol33, No 5 (1970), p 168

Figure XI-19.— Use of a Sodium Heat Pipe With a Latent-Heat High-Temperature Thermal Storage System

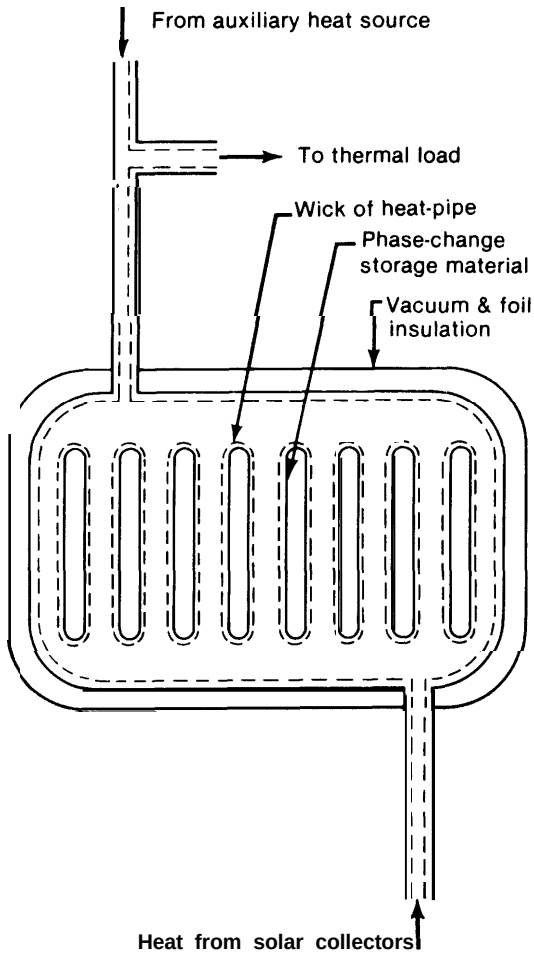

SOURCE: Drawn by OTA using N. V. Philips concept,

parts have been developed by the breeder reactor program.) The vapor condenses on the storage containers, giving the energy of vaporization gained at the collector and the cycle begins again. When the system is being discharged, the vapor is generated by the storage vessels and condensed in a heat exchanger sending energy to a heat engine. If auxiliary power is needed to supplement the solar energy, a separate heat exchanger can be built into the heat-pipe loop to permit running the engine from fossil fuels.

If these low-pressure sodium or potassium heat-pipe systems could be developed, they would be very attractive. They should not require extensive maintenance or a trained operator, and they do not appear to present any serious safety problems. Release of the. sodium from the system could be hazardous, but only very small amounts of sodium are required in the system per-unit-of-power output.

Unfortunately, there remains a substantial amount of disagreement about the performance capabilities of phase-change systems. N.V. Philips and others feel that while a substantial amount of design engineering needs to be performed, most of the major development problems associated with heat exchangers, average cycle efficiency corrosion resistance, and development of low-cost materials have been resolved .'" On the other hand, others are still having substantial development problems and feel that a considerable amount of fundamental development work is needed. Only more research and the fabrication and testing of real devices will resolve these debates.

Environmental Concerns

The environmental problems associated with the use of high-temperature thermal storage devices have not been explored in detail, although a preliminary survey of the issues has been conducted. [71]

Some of the oils proposed for use as heat transfer fluids or as storage materials can be explosive. Care will have to be exercised in the construction and operation of these systems, particularly if they are integrated into systems close to populated areas. Most oil storage tanks must be covered with an inert gas such as nitrogen to minimize the risk of explosion when the oil is heated. Leaking tanks could result in fires; earthen dikes or dams would be required around large tanks built above the ground. The risk would be reduced if underground storage were used. Care would also be essential when the ther-

70). Schroder (N V Philips Aachen Lab), private communication, Jan 13, 1977

[71] John G. Holmes, "Environmental and Safety Implications of Solar Technologies" *Proceedings,* the 1977 annual meeting of the American Section of the International Solar Energy Society, p. 28-5

ma storage materials are discarded after a system is dismantled or when fluids are replaced if they have been damaged or degraded with repeated thermal cycles. The oils would typically be dumped into city sewage systems.

THERMOCHEMICAL STORAGE

Background

Recent interest in thermochemical reactions for storing energy has been motivated primarily by a desire to find a way to store and transport energy generated by nuclear plants.[72,73] Like the heat of fusion storage systems, chemical storage has the advantage of being able to produce heat at constant temperature. It has the additional advantage of not requiring insulated storage tanks. Some chemical systems could allow storage densities many times higher than any other types of thermal storage. A variety of reactions have been examined, and there appears to be no technical barriers to using a number of them in connection with solar collectors.

The problems remaining involve both the need to understand much more about the fundamental chemistry of some simple reactions which have never been examined in detail, and the engineering details of converting laboratory reactions into reliable commercial products It is also possible to use the energy stored in chemical reactions to transport energy from collectors to a storage vessel The "Solchem" process, for example, being examined by the Naval Research Laboratory, uses the SO_3/SO_2 reaction to transfer heat to a latent-heat storage system. 74

Developing procedures which will be useful for onsite applications may be difficult, since many of the reactions being examined are quite complex. Frequently, the reaction in the collector is simpler to control than the reverse reaction, In this case, a series of distributed onsite collectors could be used to feed a common collection pipe network which operates an electric-generating device at a central facility, If hydrogen or other easily reacted materials are produced, the storage products could be used easily in onsite facilities without trained operators.

The basic chemical cycle employed is shown in figure XI-20. A chemical (labeled "A" in the diagram) is preheated in a counterflow heat exchanger and sent into the collector where it is separated into products ("B" and "C" in the diagram) through a chemical reaction. The heated-reaction products are cooled to ambient temperatures in the heat exchanger. If the reaction requires a catalyst in the solar collector, it may be possible to store the products at ambient temperatures. If no catalyst is needed, it may be necessary to store each reaction product separately. The stored products can then be piped to other sites where energy is needed, When energy is to be extracted from the system, the reaction simply proceeds backward at a lower temperature (le Chateler's principle). In the diagram, "B" and "C" recombine to form "A " If the original chemical ("A") is valuable, it must then be piped back to the collector. In some cases, the reaction must proceed through numerous intermediate steps (i.e., $A \rightarrow A' \rightarrow A'' \rightarrow B + C$).

In a recent paper, W. E. Wentworth and E Chen presented an elegant approach for evaluating and comparing thermochemical

[72] R Schulten, et al., *The Concept of Nuclear Hydrogen* Production *and* Progress of *Woolf in the Nuclear Research Center Juelich,* paper presented at the 1 st World Hydrogen Conference, Miami Beach, Fla , Mar 1-3, 1976

[73] Jon B Pangborn, "Hydrogen Energy Technology-Update 1976," in Energy Technology I I I proceedings of the third energy technology conference, Washington, D C , 1976, p 1972

[74] T A Chubb, "A Chemical Approach to Solar Energy, " to be published in *Chemtech,* 6, p 654, (October 1976)

Figure XI-20.—Typical Thermochemical Storage Technique.

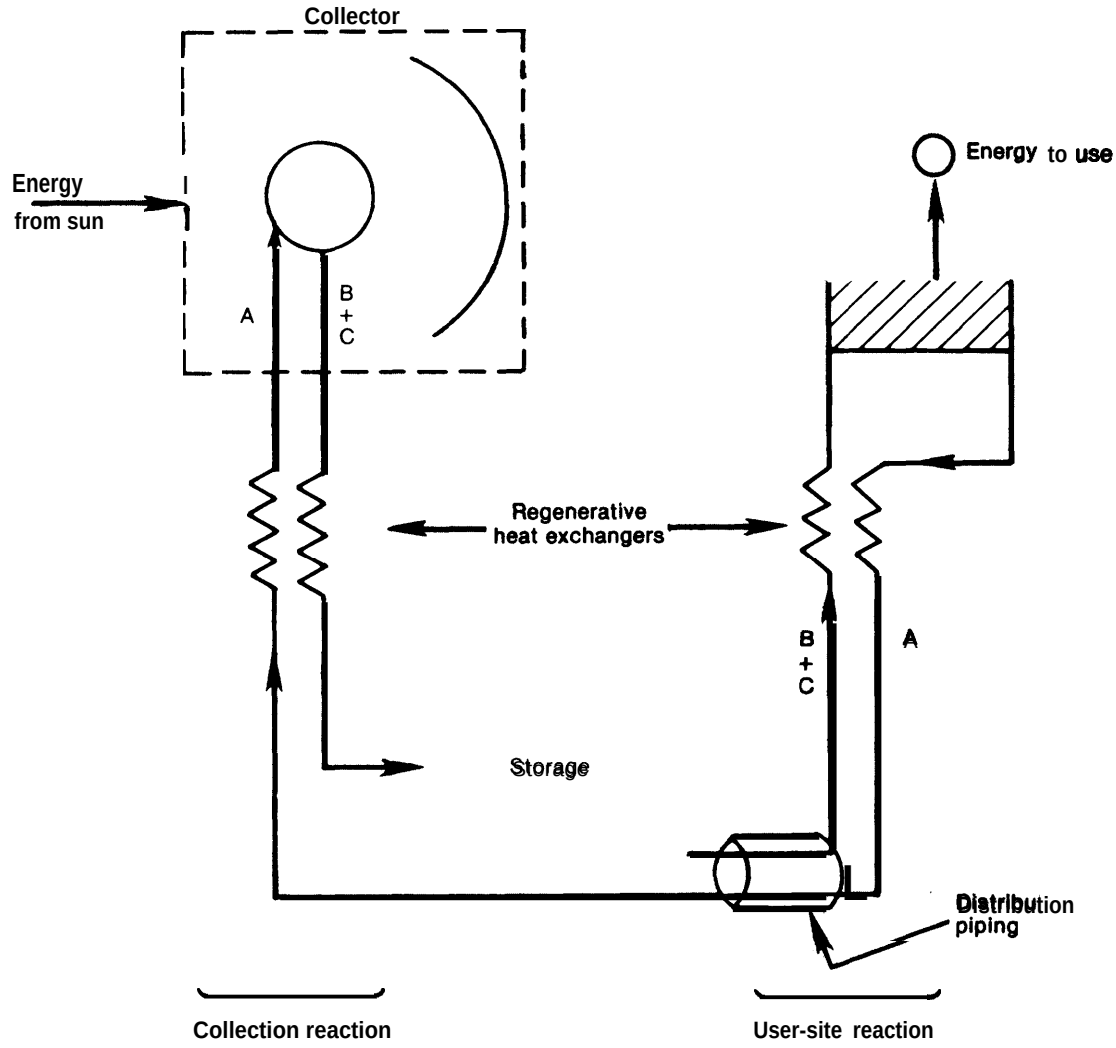

$$\text{Reactions} \quad A + \left[\text{Solar Energy}\right] \rightleftharpoons B + C \qquad B + C \rightleftharpoons A + \left[\text{Energy to user}\right]$$

reactions. Their work provides the basis for the analysis which follows. 75

The basic measures of merit for a thermochemical reaction are: 76

1 **The reaction should be nearly complete within the temperature range of available collectors. (In practical terms, it would be desirable to have 95 percent completeness at temperatures below 1,000°C.)**

2. **The reverse reaction should be nearly complete at the temperature at which useful energy is to be extracted. (If the reaction is to be used in connection**

[75] W. E. Wentworth and E. Chen, "Simple Thermal Decomposition Reactions for Storage of Solar Thermal Energy," *Solar Energy* **18(3),** 1976, p. 205.

[76] Ibid., p. 208,

with a conventional powerplant, this temperature would be approximately 500 "C; if a Stirling cycle or Brayton cycle device were to be used, the temperature should be closer to 800 "C.).

3 The reversible reaction should be able to release energy for the user at temperatures close to those supplied by the collector. (The collector temperature should be as low as possible to minimize material problems and to maximize collection efficiency— in the following discussion, it will be seen that this requirement will be met by reactions which involve large changes in entropy.)

4. The energy absorbed per-unit-volume of the products stored should be as large as possible to minimize the volume of storage. It would be most desirable to be able to store the reaction products in liquid form. This would both reduce storage costs and the energy losses in pumping the stored material.

5. The reaction should be completely reversible and no side reactions should occur to produce contaminants in a closed-cycle system. These side reactions would tend to create products which would accumulate and eventually poison the system.

6. Reactions should be fast.

7, None of the reactions involved should require extensive development of new chemical techniques. They should not require expensive or elaborate equipment. This is of paramount importance for onsite equipment not operated by trained personnel.

8 The reaction products should not react strongly with water or oxygen, since it would be difficult to seal the system against these materials.

9 The materials used should be inexpensive and should not require chemicals for which shortages are likely to develop.

Design Alternatives

Most of the thermochemical reactions which are now being examined for use in connection with high-temperature storage systems require fairly sophisticated reaction apparatus which must be maintained by trained personnel. As a result, these thermochemical systems will be limited to relatively large onsite systems, such as shopping centers, industries, and communities. Research may develop reactions which do not require such attention and the equipment needed for existing systems may be simplified, but much more development work is needed before assessment of this issue can be made.

METHANE–STEAM

A variety of reactions have been proposed for use in larger systems, and some of them are summarized in table XI-6. The reaction which has probably received the most recent attention is the methane/syn-gas reaction. The methane reaction probably requires the least development since the technology required for each step of the storage process is commercially available and the chemistry is well understood.

The Ralph M. Parsons Company, for example, has operated a device for converting hydrogen and carbon monoxide to methane for 3 years, producing nearly a million ft^3/-day of methane. The equipment was designed as a part of a synthetic fuel plant, where the first step would be partial combustion of coal to produce the "syn-gas" combination of H_2 and CO, and the second phase would use the Parsons' "methanation" process. 77

One potential difficulty of the methane/steam process for onsite application is the difficulty of controlling the reaction. The thermal output from the reaction which gencrates heat can be throttled down to about 50-percent peak capacity without major dif-

"Charles Luttman (Ralph M Parsons Co.), private communication, Aug. 6, 1976.

Table X1-6.—Candidate Chemical-Energy Storage Reactions

Reaction	Temperature of reaction in collector • °C	°F	Temperature of user reaction • °T	°C	°F	Energy stored per unit mass (vol.) of storage material Btu/lb	kcal/liter	Cost of storage material $/kWh	Comments
$CH_4 + H_2O \rightleftharpoons CO + 3H_2$	780	1,440	0.94	610	1,130	2,792	50		Products of the storage reaction are gases and thus volume is large. Gas must be stored under pressure. Reactions are well known. Nickel catalyst required. $CO + 3H_2$ $CH_4 + H_2O$ is a methanation reaction.
$CH_4 + CO_2 \rightleftharpoons 2CO + 2H_2$	619	1,090	0.92	589	1,150		60		Products stored as gas
$SO_3 \rightleftharpoons XO_2 + \frac{1}{2}O_2$	1,025	1,880	0.95	590	1,090	532	110	0.16	Cost includes system cost SO_2 stored as liquid, O_2 as gas,
$NH_4HSO_4 \rightleftharpoons NH_3 + H_2O + SO_3$	498	930	0.90	435	850		512	1.1	Products stored as liquids. ΔH = 60 kcal for liquid storage experiments in progress
$Mg(OH)_2 \rightleftharpoons MgO + H_2O$	199	390	0.67	335	635	446	740	0.62	H_2O stored as liquid (ΔH = 9.6 kcal). Laboratory scale experiments.
$Ca(OH)_2 \rightleftharpoons CaO + H_2O$ . .	595	1,100	0.92	390	740	567	470	0.07	Experiments have been made. H_2O stored as liquid (ΔH = 16.4 kcal).

. See text for explanation of terms In the anal ysis of "temperature efficiency $T_C = 100°$ F has been used

SOURCES W E Wentworth and E Chen, "Simple Thermal Decomposition React Ions for Storage of Solar Thermal Energy, Solar Energy 18(3), 1976

T T Bramlette (Sandia Laboratories, Livermore), Survey *of High- Temperature Thermal Energy Storage* *SAN D75-8063,* March 1976, pp 83-94

R S Hockett and R W Serth, "High Temperature Thermal Energy Storage System, " *12th IECEC Conference,* (1977), pp 510

ficulty, but control beyond the So-percent reduction becomes difficult. Another major problem is the relatively low-energy density of the gas which must be stored. The H_2+ CO mixture holds approximately *60* Btu/ft[3] at atmospheric pressure, and methane holds approximately *240* Btu/ft[3]. The price of tanks for storing the coal and gas mixture will dominate the cost of this type of storage. If large amounts of gas are to be stored and underground caverns or abandoned gas fields are available, underground storage is clearly the most inexpensive approach. A recent JPL study estimated that hydrogen could be stored in depleted gas fields and aquifers for about $1/1 ,000 SCF,* in dissolved salt caverns constructed for this purpose for about *$3/1 ,000* SCF, and in mined caverns for about $5.6/1 ,000 SCF.[78] The energy storage costs would thus range from about $17/10[6] Btu ($0.057/kWh t) of storage capacity for gas field storage to about $93/10[6] Btu ($0.32/kWh,O for mined caverns.

These underground storage systems would not be available in many sites, They could probably be used only in connection with a very large plant, and then only if appropriate geology could be located. With current technology, it would be necessary to store the gas in pressurized tanks, In the future, it may be possible to store hydrogen

'The abbreviation "SCF" stands for standard cubic feet If the gas is stored under pressure, the volume wou Id be less than the "SCF"

[78] Toshio Fujita (J PL), Underground *Energy Storage for Electric Utilities Ernp/eying Hydrogen Energy Systems, June* 1976, p VIII

in solid hydrides .79 A recent EPRI study indicated that hydrogen could be stored at 88 atmospheres for about $0.50/SCF[80] (or $28/kWh) in the syn-fuel storage system.

Major development problems which must be overcome for the methane/steam cycle include the design of high-temperature receivers using nickel-base catalysts. The receivers must be capable of operating for extended periods with minimal maintenance. Another unresolved issue is the question of the extent to which the system will be stable when the load or solar influx changes suddenly. There may also be difficulties with side reactions which would lead to the accumulation of reaction products that would poison the system. The seriousness of these difficulties and the cost of overcoming them cannot be determined without operational testing.

MULTISTAGE PROCESSES FOR GENERATING HYDROGEN

A number of multistage processes have been suggested for generating hydrogen, but most are cumbersome for onsite applications and involve several different reactions, some of which require the addition of low-temperature "process heat" in addition to the high-temperature processes. 8.Two advantages of these multistage processes over single-stage hydrogen production are that lower temperatures can be used and that the two gases are released separately at different stages.

General Atomic Company, which in 1973 developed a computer program to find the best combination of chemical reactions that could form closed hydrogen-producing cycles, reported to ERDA last fall that it found the following cycle the most promising:

$$2H_2O + SO_2 + I_2 \rightarrow H_2SO_4 + 2HI \quad (1)$$

$$H_2SO_4 \rightarrow H_2O + SO_2 + 1/2\,O_2 \quad (2)$$

$$2HI \rightarrow I_2 + H_2 \quad (3)$$

Two other high-temperature chemical storage cycles are being studied by Westinghouse in the United States and KFA in West Germany. In all three cycles, the primary heat storage occurs in the dehydration and pyrolysis of H_2SO_4.[82] Several reactions have also been proposed by Debini and Marchetti (using $CaBR_2$ and $HgBr_2$) Westinghouse (using a hybrid sulfuric acid process), General Atomics (using an iodine-sulfur dioxide cycle), Schulten (using a methanol-sulfuric acid process), the Lawrence Livermore Laboratory (using a zinc-selenium cycle), the Institute of Gas Technology (using iron chloride), and others.[83] A major problem with all of the reactions examined is low efficiencies (typically *20* to *40* percent). In many cases, the basic chemistry of the processes has not been well established.

In addition to the calcium-bromide process described above, reactions using cesium, tin, iodine-vanadium chloride, and iron chloride-oxide have been proposed. The calcium-bromide reaction appears to be the most efficient, All require three or more processes and considerable quantities of process heat. 8485 The cost of such systems is extremely difficult to estimate at present. One preliminary study showed that a 47-percent efficient thermochemical-process plant for converting solar-supplied heat into hydrogen would cost $25 per kW of thermal in-

[79] G Strickland and J J Reilly, *Operating Manual for the PSE&G Hydrogen Reservoir Containing Titanium Hydride,* Brookhaven National [Lab, February 1974

[80] *Utilization of Off-Peak Power to Produce Industrial Hydrogen,* EPRI 320-1, Final Report, prepared by Institute of Gas Technology, August 1975

[81] M M Eisenstadt and K E Cox, " Hydrogen Production From Solar Energy," *Solar Energy,* 17(1), 1975, p 59

[82] Data provided by ERDA, Office of Conservation

[83] Eisenstadt and Cox, op cit, A *Technoeconomic Analysis of Large-Scale Thermochemical Production of Hydrogen,* (EPRI EM-287), December 1976, *Preliminary Assessment of Economics of Hydrogen Production From Lawrence Livermore Laboratory, ZnSe Thermochemical Cycle,* United Engineers, September 1976

[84] R F Chao and K E Cox, "An Analysis of Hydrogen Production via Closed Cycle Schemes, " *Proceedings,* THEME Conference, Miami Beach, Fla, S13 1-S1 32 (March 1974), cited In Eisenstadt and Cox

[85] Pangborn, op cit, p 174

put capacity .8' Converting this to 1976 dollars and removing the contractors overhead and profit, which will be added in later, this cost is $26 per kW of thermal input capacity, or $57 per kw of hydrogen- production capacity. This cost does not include the cost of hydrogen storage tanks, which would cost a great deal. A big central system could pipe the hydrogen to gas customers in natural gas pipelines, or store it in depleted natural gas wells, but these options may not be available to the small onsite units. In addition, much work remains to be done on the systems, however, and it seems that the chemistry required will be too complex for any but the largest "onsite" facilities being examined in this study.

SULPHUR DIOXIDE/SULPHUR TRIOXIDE

Some of these difficulties associated with the methane system can be avoided in the other simple chemical system which has received major interest—the

$$SO_3 \rightleftarrows SO_2 + \tfrac{1}{2} O_2$$

reaction. Its major advantage is that only the oxygen cannot be stored as a liquid at ambient pressure and temperatures; this results in a very substantial saving in the cost of storing the material. The system has no side reactions, and it requires relatively small catalyst volumes.

Since the sulfur trioxide reaction reaches completion at temperatures nearly 2000 F higher than the methane/steam system, a receiver and reaction chamber must be made out of ceramics or other material capable of withstanding high temperatures. The development of such a receiver presents a major problem. The system would also require relatively large heat exchangers at both the collector site and in the system for reacting the sulfur dioxide to generate heat. This results from the high molecular weight of the materials used and the necessity of condensing the products in the heat exchangers. The sulfur system could also present corrosion problems since corrosive acids would form if any water entered the system; the safety problems associated with piping the materials must also be examined.

Examining the chemicals in table XI-6, it appears that one of the most attractive materials for high-temperature storage would be NH_4HSO_4, since all of its reaction products can be stored as liquids at ambient temperature and since its reaction temperatures are not as high as those required for the SO_3 system .87 Work has begun on this and a variety of other reactions, and it is clear that not all possibilities have been explored.

The sulphur compounds used in this storage system could create environmental hazards if the equipment leaks or is not properly maintained. Accumulations of sulfur-based gasses can be highly toxic and may be explosive under the right conditions.

Summary

The costs of several of the high-temperature thermal storage systems discussed in this section are summarized in figure XI-21.

ELECTRIC STORAGE

All of the storage devices examined thus far are designed to deliver heat which can be either used directly to heat a building or for some other purpose or to operate a heat engine. It is also possible to store the electricity produced by heat-engine generators or photovoltaic devices. Electricity can be "stored" directly in a loop of superconducting (zero-resistance) wire, and although research is being conducted on such devices,

[86] W Hauz, et al., Publication 72 TM P-1 5, General Electric-TEMPO, Santa Barbara, Calif., April 1972, cited in E isenstadt and Cox.

[87] Wentworth and Chen, op. cit

Figure XI-21 .— High-Temperature Thermal Storage Cost per kWh_t Versus Storage Capacity

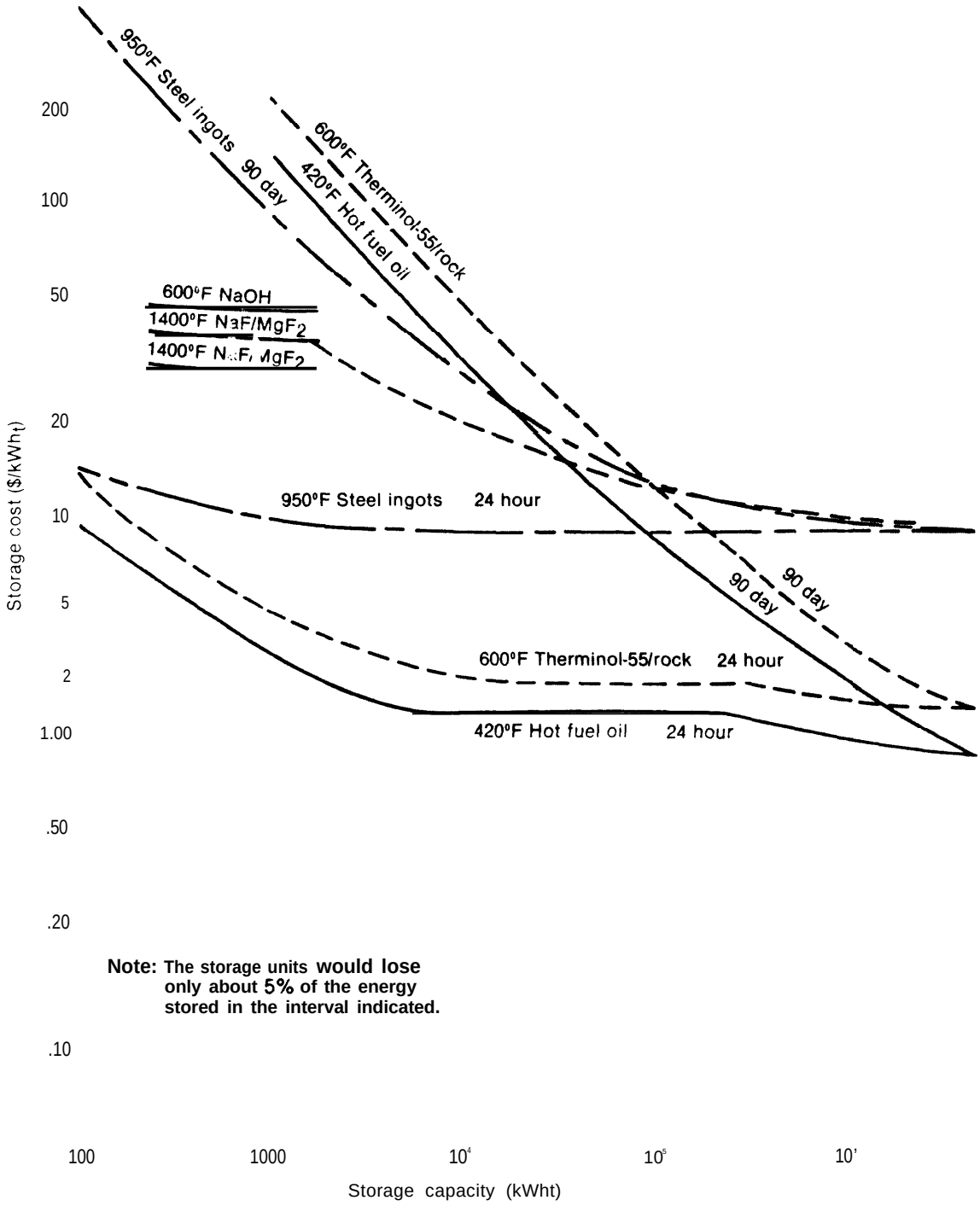

Note: The storage units would lose only about 5% of the energy stored in the interval indicated.

they are unlikely to play a significant role in energy storage for some time. All other forms of electric "storage" convert the electricity into mechanical or chemical energy in such a way that electricity can be easily removed.

MECHANICAL STORAGE DEVICES

The only large-scale electric storage systems in use today are pumped hydroelectric storage facilities. A conventional installation consists of two lakes connected with a device which is a combination pump and turbine generator. Water is pumped into the upper lake when energy is available to charge the storage and is discharged through the turbine generator when the system is discharged. Standard hydroelectric facilities can provide storage since the flow of water through turbines can be restricted during periods of low demand, in effect storing water in the dam's lake for later use.

Hydroelectric storage facilities are likely to continue to be one of the least expensive techniques for storing electricity, even if advanced electric storage systems of other types are developed. Unfortunately, the United States has already exploited a significant fraction of the most attractive sites for hydroelectric facilities, and attempts to develop many of the remaining sites are likely to face determined opposition on environmental grounds. A number of potential sites are protected under the "Wild and Scenic Rivers Act" and other legislation. A pumped hydroelectric facility is particularly unattractive from an environmental standpoint, and the lakes created are difficult to use for recreation. This is because the water levels in lakes created in a pumped hydroelectric system change significantly throughout the day and the pumping continuously mixes water from different parts of the lake.

It may be possible to greatly expand the number of potential sites for pumped hydroelectric facilities by placing one of the storage reservoirs deep underground as Illustrated in figure XI-22. Such a facility could be located wherever minable rock exists at the required depths, but would cost considerably more than a standard hydroelectric facility. Recent estimates of the cost of a pumped hydroelectric facility capable of producing 2,000 MWe for 10 hours range from $270 to $350/kW.[88]

Looking in another direction, it has been found that a very large amount of potential hydroelectric capacity can be found in the numerous small dams which already exist around the United States. The generating capacity of existing small hydroelectric sites could be expanded, and generators could be added to a number of dams which currently are used exclusively for other purposes, The results of a preliminary survey of the opportunities presented by existing dams are summarized in figure XI-23 and table XI-7. The survey discovered that a generating capacity of 26.6 GWe could be installed at small dams (dams capable of producing less than 5 MWe of power) and that these small facilities could provide 159 billion kWh annually. This represented approximately half of the new capacity identified. The extent to which such dams could be used for power and storage cannot be determined without a more detailed examination of the issue.

It must also be recognized that solar energy systems will not be able to benefit directly from most of the added hydroelectric capacity, since utilities will want to take maximum advantage of new and existing hydroelectric facilities for storage and for meeting peak demands. Solar equipment could benefit indirectly to the extent that the new facilities improve the ability of utilities to meet fluctuating demands. Mechanical storage of electricity can also be accomplished with flywheels by compressing gas in underground caverns for use in Braxton cycle engines, and in other ways. These techniques have been adequately reviewed elsewhere.

[88] Frank M. Scott, "Underground Hydroelectric Pumped Storage. A Practical Option," Energy, Fall 1977, p 20.

Figure XI-22.— An Isometric View of an Underground Pumped Storage Plant

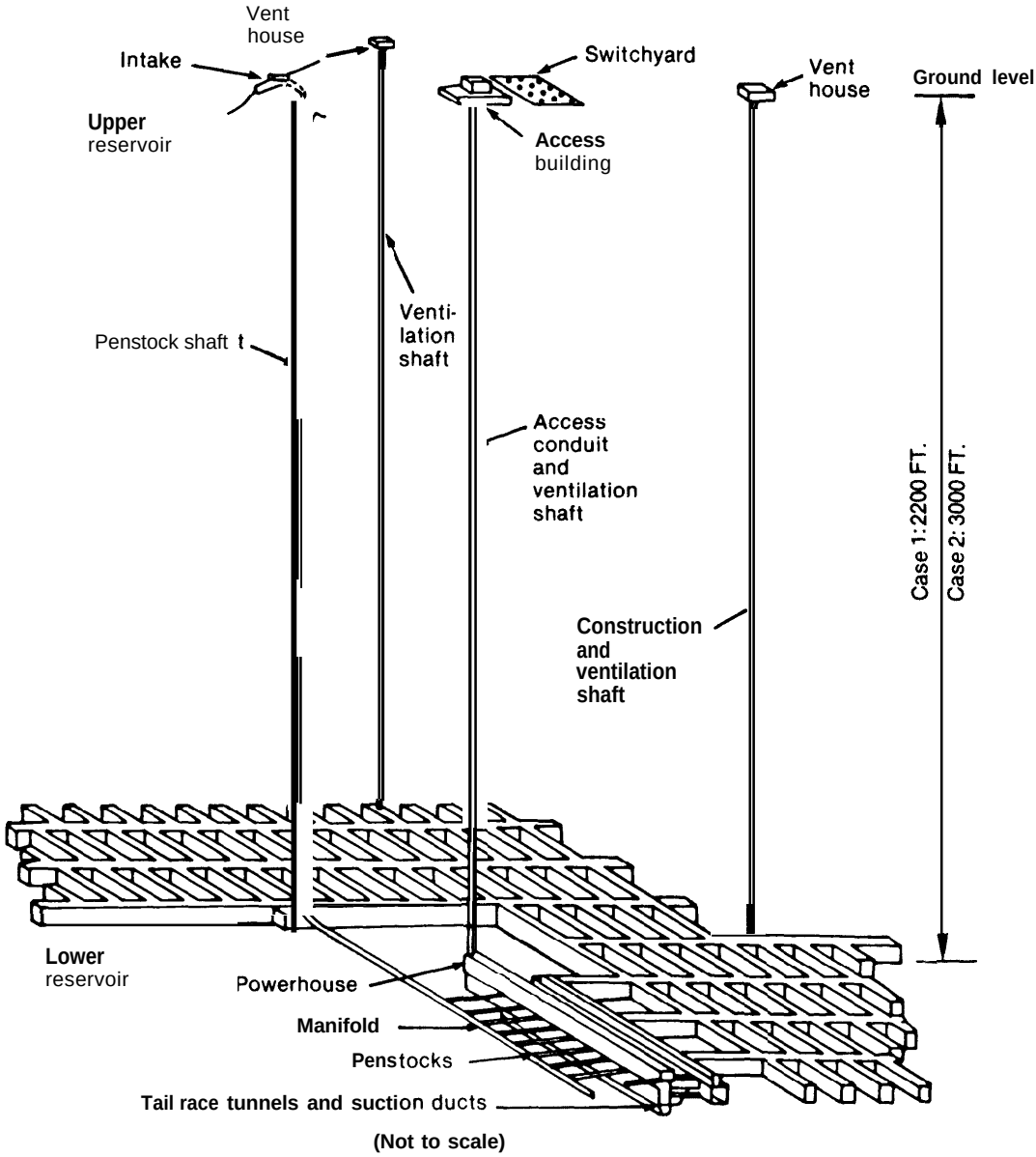

SOURCE: Scott, Frank M. "Underground Hydroelectric Pumped Storage: A Practical Option" *Energy* Fall/1977 p. 20

Figure XI-23.— Conventional Hydroelectric Capacity Potential at Existing Dams

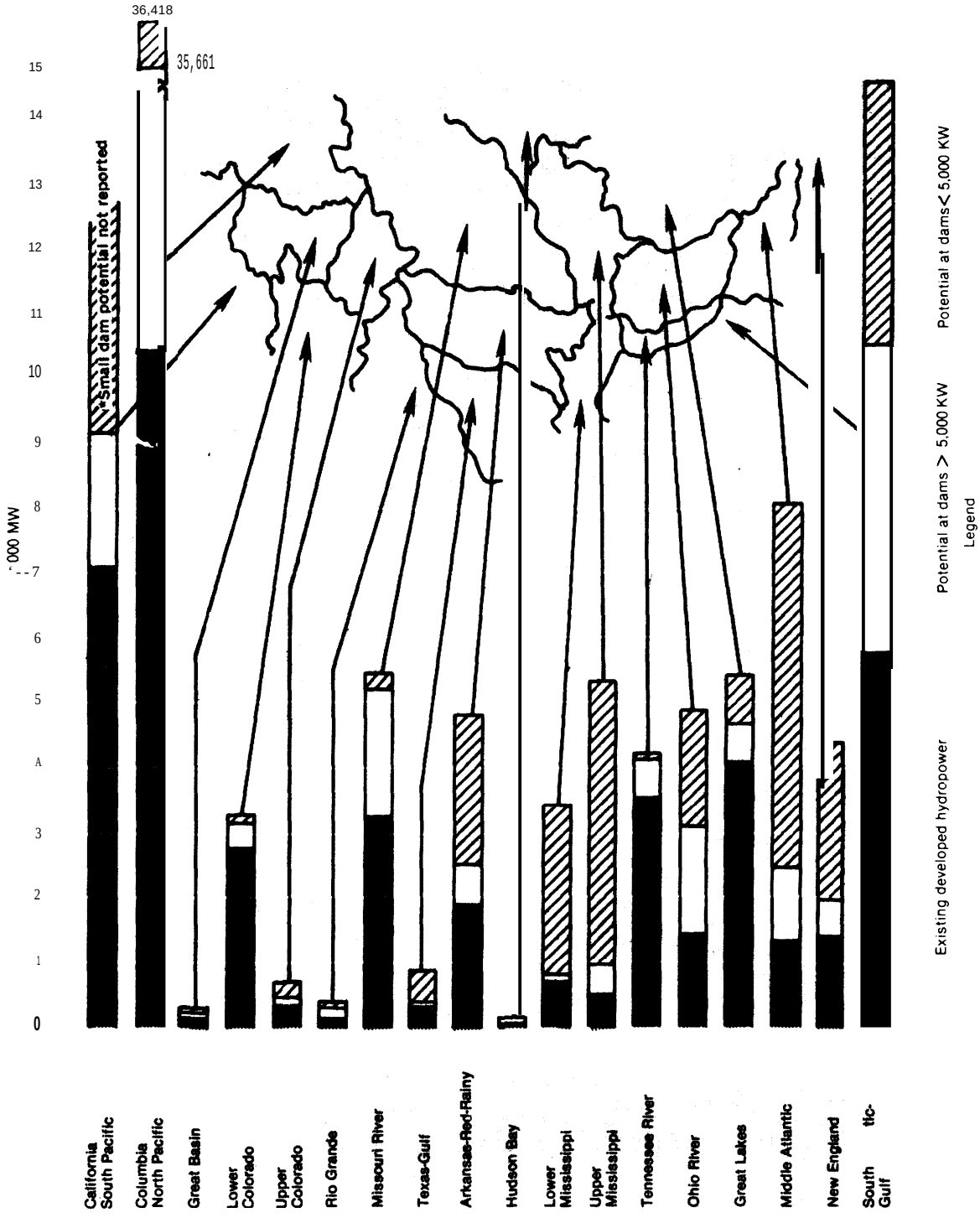

SOURCE McDonald, R J Principal Investigator (U S Army Corps of Engineers
'Estimate of National Hydroelectric Power Potential at Existing Dams July 20 1977

Table XI-7.-Conventional Hydroelectric Capacity Constructed and Potential at Existing Dams

	Capacity (millions of kW)	Generation (billions of kWh)
Developed	57.0	271.0
Under construction	8.2	16.8
Total installed	65.2	287.8
Potential rehabilitation of existing hydrodams	5.1	24.4
Potential expansion of existing hydrodams	15.9	29.8
Potential at existing non-hydro dams greater than 5,000 kW	7.0	20.4
Potential at existing non-hydro dams less than 5,000 kW	26.6	84.7
Total potential	54.6	159.3
Total (developed and undeveloped).	119.8	447.1

SOURCE: McDonald, R J Principal Investigator (U.S. Army Corps of Engineers Institute for Water Resources), "Estimate of National Hydroelectric Power Potential at Existing Dams," July 20, 1977

BATTERY STORAGE

Batteries are able to store electrical energy by using a variety of different reversible electro-chemical reactions. The electrical energy must be introduced and withdrawn from batteries as direct current, however, and a "power-conditioning" device must be included in any battery system which receives and produces alternating current. Within large bounds, the cost of batteries per unit of storage capacity is independent of the size of the system since most batteries are built by combining a large number of individual reacting cells. Larger systems may benefit from some economies of scale because of savings due to more efficient packing, lower building costs, and possibly lower costs of power conditioning for larger systems, but a separate analysis on this point must be performed for each type of battery. It is likely that there will be an optimum size for each device.

Lead-acid batteries are the only devices currently mass produced for storing large amounts of electrical energy using electrochemical reactions. Systems as large as 5,000 kWh are currently used in diesel submarines. Batteries now on the market which can be deeply discharged often enough to be attractive for onsite or utility storage applications, however, **are too expensive for economic use by electric utilities. Extensive work is being done to determine whether it is possible to develop batteries suitable for use in utility systems. Work is being done on advanced lead-acid battery designs and on several types of advanced batteries which it is hoped will be less expensive than lead-**

acid batteries in the long term. This work has been thoroughly reviewed in several recent papers .[89 90 91 92]

Lead-Acid Batteries

When voltage is applied to a lead-acid battery, energy is stored by converting the lead sulfate ($PbSO_4$) on the battery electrodes into a mixture of pure lead (Pb), lead dioxide (PbO_2), and sulphuric acid (H_2S0_4); the reaction is reversed when the battery is discharged.

The current market for lead-acid batteries capable of multiple deep cycles is very limited and prices are high. (Automobile batteries cannot be used in power applications since the full charge in such batteries cannot be withdrawn repeatedly without damaging the battery.) "Houselighting battery sets" are being manufactured for use with windmills and remote generating plants. Units capable of 2,000 deep cycles cost approximately $385/kWh.[93] 94 Golf cart batteries sell for as little as $40/kWh, but are only capable of about 350 cycles. Industrial traction batteries, used in fork-lift trucks and the like, have lifetimes of nearly 2,000 cycles and are available for as little as $80/kWh.

The Department of Energy asked several battery manufacturers to estimate how much it would cost to manufacture a battery capable of storing 5 megawatt-hours, discharging in 10 hours, and lasting 500 to 1,000 cycles, using essentially off-the-shelf components. The manufacturers' responses averaged about $93/kWh, but responses varied from $41 to $138/kWh.95 This spread reflects a range of battery capabilities. An independent survey conducted by the Bechtel Corporation resulted in an estimate of about $63/kWh.[96]

The industrial battery price of $80/kWh will be used in further analysis to represent "current" battery prices for community systems.

While the range of prices encountered for near-term batteries reflects the differing specifications, production rates, etc., there is rather remarkable agreement about what batteries will cost in the intermediate term when comparable assumptions are used. Table XI-8 shows recent estimates of the price and specifications of load-leveling batteries, assuming a production rate of 1,000 MWh/yr in a dedicated production facility. These estimates reflect a relatively rapid writeoff of plant costs. Westinghouse has estimated[97] a selling price of *$41.68/kWh* by assuming vertical integration of lead production and battery manufacture, present battery technology, and more optimistic assumptions about writeoff.

A major disadvantage of contemporary lead-acid battery designs is their relatively low storage capacity per unit weight. This is due largely to the amount of lead used. Lead-acid batteries have a theoretical "energy density" of about 0.175 kWh/kg, and

[89] *An Assessment of Energy Storage Systems Suitable for Use by Electric Utilities,* Public Service Electric and Gas Company under E PRI Project 225 and ERDA Contract No E (11-1)-2501, Vols. I & II, July 1976.

[90] *"Near-Term Energy Storage Technologies: The Lead-Acid Battery,* a compilation of papers presented at the ERDA-E PRI-ILERO Workshop, Dec. 18-19, 1975, EPRI SR-33

[91] JR. Birk, *The Lead-Acid Battery* for *Electric Utilities: A Review and Analysis,* presented at ERDA-E PRI Lead-Acid Battery Workshop 11, Dec. 9,1976

[92] *Ralph Whitaker and Jim Birk, "Storage Batter[es: The Case and the Candidates, " *EPR/ Journal,* October 1976, pp 6-13

[93] Prices quoted by Solar Wind Company, North Orland, Maine The batteries are of Austrian manufacture and come in a clear polystyrene case withbu i lt-in pilot-ball charge indicators in each cell.

"All prices quoted are based on the battery capacity when discharged to rated depth-of- discharge Unless otherwise stated, it is assumed that batteries operate with 80-percent discharge in a typical cycle.

[95] "A National Battery Energy Storage Test (BEST) Facility Conceptual Design and Design and Cost Estimate," BEST Facility Study Project Team, EPRI 255, ERDA 31-109-38-2962, Technical Report 1, August 1975, p I II-11

[96] Bechtel Corporation, op cit

[97] *Study of the Manufacturing Costs of Lead-Acid flatteries* for *Peaking Power,* Final Report, Westinghouse Electric Corp , ERDA Contract No. E(40-18)-21 14, December 1976,

Table X1.8.—Economic Specifications (5-hr Battery)

Specification	C & D[a]	ESB	Globe-Union	Gould	Westing - house[b]
Price ($/kWh)[c]	55	56	58	54[d]	49
Life (cycles at 77" F)	2,000	2,000	2,000	2,000	1,750 (95° F)
Price/cycle	2.7	2,8	2.9	2.7	2.8
Efficiency (%)[e]	73	76	72	70	68
Replacement price ($/kWhr)	40	32	38	25	34
O&M cost (mills/ kWhr)	0.28	0.18	—	—	—

[a]Based upon 85% depth of discharge to achieve 2,000 cycles Instead of 95% of discharge to achieve 1,250 cycles at a price of $49/ kWhr (to be discussed)

[b]Does not reflect raw materials Integration and market optimism Included by Westinghouse (to be discussed)

[c]Assumes 25c / lb lead

[d]Installed cost

[e]Includes Conversion efficiency Of 90%

SOURCE James R Birk, "The Lead-Acid Battery for Electric Utilities A Review and Analysis "presented at the ERDA / EPRI Lead-Acid Battery Workshop 11, Dec 9, 1976

thus a perfect battery would weigh about 12,6 pounds per kWh. Commercial batteries weigh more than this because of design inefficiencies and the need to provide packaging for the active materials Commercial lead-acid systems weigh about 100 pounds per kWh of storage capacity, of which 60 to 80 pounds is lead The cost of this rather substantial quantity of lead imposes a practical lower limit on the price of lead-acid batteries

In 1975, when ERDA asked three of the largest battery manufacturers in the United States to design the lowest cost battery for utility applications, the estimates of material costs ranged from $24 to $34/kWh.[98] (The range is much smaller if allowance is made for the differing lifetimes of the designs.) Very high production volumes would be required before the price of the complete battery would approach this minimum material cost.

The Axel Johnson *Institute* **for industrial Research in Sweden has proposed a novel technique for reducing lead requirements by using aluminum electrodes covered with a lead coating. The device is currently being tested by EPRI.[99]**

The current U.S. production rate of lead could support all foreseeable needs of on-site electric systems and should be able to support the development of a nationwide battery system used for utility peak shaving (although the price of lead would undoubtedly increase if a very **large demand developed). Present U.S. domestic lead consumption is about 600,000 tons per year, and our** reserves are **estimated at 40 million tons (World production is approximately 3.6 mill ion tons and world reserves 141 mill ion tons.)[100] Thus, at present** energy densities, current production rates could provide 15 to **20 million kWh of storage per year or enough to provide 4,000** to **5,000 MWe for 4 hours every day. At this rate of production, therefore, it would take 10 years to** develop a battery system capable of meeting 10 **per-**cent of **U.S.** electricity demand for 4 hours

[98]J. R. Birk, "Technical Analysis," in *Near-Term Energy Storage Technologies: The Lead-Acid Battery,* EPRI SR-33, March 1976, p. 185.

[99]A C Simon and S M Cauldar, "The Lead-Acid Battery," *Proceedings,* Symposium and Workshop on Advanced Battery Research and Design, Argonne National Laboratory (AN L-76-8), March 1976

[100]*OM/ner.?I\ Yearbook,* U S Department of the Interior, Bureau of Mines, 1973

per day. The lead used in the batteries is not consumed in the storage process, and after the initial investment is made, the material can be recycled indefinitely.

An ordinary automobile battery will last 3 to 5 years, undergoing extremely shallow cycles several times a day, but would be capable of only 150 to 250 deep discharges. The electrodes in batteries used in golf carts, industrial forklifts, etc., are usually 2 or 3 times as thick as those used in car batteries and are typically capable of 300 to 500 deep cycles. Batteries capable of discharging 2,000 times are currently available and this has become a design objective for utility storage batteries.

A practical limit to the depth of discharge which can be obtained from a given battery design can be obtained by watching the battery's voltage. This voltage drops slowly during discharge and then begins to f al l sharply. If the battery is discharged beyond this point, its life is shortened substantially.

ENVIRONMENTAL AND SAFETY PROBLEMS

Lead-acid batteries produce potentially hazardous gasses, such as hydrogen, arsine (AsH_3), and stibine (SbH_3) when they are cycled. Hydrogen released in the atmosphere has no effect on air quality or human health, but is highly flammable and explosive in concentrations above 3 percent. This danger can be eliminated by placing batteries in well-ventilated compartments.

Arsine and stibine are toxic, colorless, gaseous compounds which form during the required, periodic, high-voltage charging of lead-acid batteries. For example, the recommended threshold limit values for arsine and stibine in workroom air are 0.05 ppm (0.2 mg/m^3) and 0.1 ppm (0.5 mg/m^3), respectively.[101] Whether these levels will be exceeded when charging lead-acid batteries for home energy storage is presently unknown. The recognition of the possible adverse environmental impact of arsine and stibine and implementation of appropriate safeguards– proper battery placement and ventilation – reduces the risk of harm from these gasses.

Advanced Batteries

Three basic categories of advanced systems are under exam i nation:

1. Aqueous or water-based systems which operate with electrodes surrounded by a liquid electrolyte, as do lead-acid systems.
2. Nonaqueous high-temperature systems, which use a nonaqueous material to conduct ions needed to complete the electrochemical reaction.
3. "RED OX" (reduction/oxidation) devices which reduce aqueous solutions to store energy. (REDOX batteries are "aqueous," but they are usually considered separately.)

Table XI-9 summarizes the characteristics of several advanced battery designs.

AQUEOUS BATTERIES

Zinc *Chloride*

Zinc-chloride batteries are aqueous de vices which can store electrical energy in aqueous chemical solutions at ambient temperature. Research on this battery is underway in a joint venture of Gulf Western Industries and the Occidental Petroleum Corporation. Small (50 kWh) units have been tested at Argonne National Laboratory, and it is expected that a 10 MWh battery will be tested in a realistic utility environment by 1980.

The small experimental batteries now being produced cost approximately $2000 a kilowatt hour, but when the system reaches production stages, cost is expected to be reduced to $40 to $50. This is more expensive than projections for lithium or sodium battery systems, but this cost is offset to

[101] Report on an Engineering Study of a 20 MWh Lead-Acid Battery Energy Storage Demonstration Plant," for Argonne National Laboratory under Contract No. *31-109-38-2962,* by Bechtel Corporation, October 1975, p. 5-5.

Table X1.9.—Load-Leveling Batteries: Candidates and Characteristics; Developers and Demonstration Dates

	Operating emperature (°C)	Theoretical cell energy density (Wh/lb)	Design cell energy density (Wh/lb)	Design modular volumetric energy density (Wh/in^3)	Depth of discharge[a] (%)	Density 10 hr rate (mA/cm^2)	Active materials cost ($/kWh)	Demonstrated cell size (kWh)	Demonstrated cell life (cycles)	Critical materials	Major developers	BEST facility test (5-10 MWh)	Demonstration station	Commercial introduction
Lead acid (Pb/PbO_2)	2030	110	11	075	25	10 -15	850	>20	2,000	**Lead**	Gould Inc ESB Inc C&D Batteries Globe-Union Inc.: K.W. Battery Co	1979	1981 83	
Sodium sulfur (Na / S)	300350	360	70	2 5	85	75	049	05	400		General Electric Co Dow Chemical Co Ford Motor co	1981 82		
Sodium-antimony trichloride (NA $SbCl_3$)	200	350	50	20	80-90	25	235	002	175	Antimony	ESB Inc	1981 82		
Litium-metal sulfide $Li/Si/FeS_2$)	400450	430	85	35	80	30	4 27	1 0	1000	Lithium	Atomics International Div Rockwell International Corp.: Argonne National Laboratory	1980		
Zinc chlorine (Xn/Cl_2)	50	210	45	1 0	100	40-50[b]	**Theor - 0.59c Practical - 0.84**	1.7		Ruthenium (catalyst)	Energy Development Associates	1980		
Z[nc-bromine (Zn / Br_2)	30-60	195	40	15	90	30	**Theor - 1.56** Practical - 1.65	01	2.000	None	Exxon Gould GE	1983	—	Post 1985
Hydrogen-chlorine (H_2/Cl_2)	30-60	450	50	0 3	95	300	20	001	50	Platinum Ruthenium (catalyst)	GE, BNL	1983	·	Post 198'3
REDOX	am bient	—	40[c]	—	90	40-60	$3-$10	005	200	None	NASA-Lewis	1984	1986	1988
Iron REDOX	ambient	—	38	2 6			$1	~1	>1 ,000	None	G E L		1980	

[a] Also known as utilization of active materials.
[b] 5 hr rate.
[c] GE calculates for (Zn/Cl_2).
[d] (whilstreo f sol. tion)

SOURCES EPRI **Journal** and Kurt W Klunder Battery Branch Of fice of Conservation EROA

some extent by the fact that zinc-chloride batteries produce a constant voltage and equipment necessary to convert the current to a.c. is cheaper than other systems, resulting in an overall competitive price. Zinc-chloride batteries are capable of operating at ambient temperatures, but require a complex plumbing system for circulating the electrolyte and controlling the temperature of the system. '[02],[03] The presence of chlorine gases could create an environmental problem if used in onsite systems.

Zinc Bromide

The zinc-bromide battery is another aqueous device being developed primarily for utility load leveling and electric automobiles. Early work on these batteries was done by the G.E.L. Corporation of Durham, N.C. Devices developed by the General Electric Corporation have operated for more than 2,000 cycles of 2.5 hours discharges. '[04]

Researchers at G.E. believe that batteries based on this concept, capable of 65 to 80 percent efficiencies, should cost no more than $17 to $26/kWh (excluding the cost of pumps, controls, and marketing). The major problem is the development of a low-cost and reliable membrane. Imperfect membranes lead to a "self-discharge." In the most recent G, E. designs, the cell discharges at about 0.1 percent per hour.

One potentially serious problem with zinc bromide is the caustic nature of the bromine solution. Containment of this material can be expensive and great care must be taken to ensure that this powerful chemical is properly contained.

HIGH-TEMPERATURE BATTERIES

Sodium/Sulfur

Sodium/sulfur batteries, under developments by the Ford Motor Company, use active materials which are inexpensive and widely available. Most of the development work on this battery has centered on a solid electrolyte material called "beta-alumina" (an alloy made of sodium, aluminum, and oxygen), 05 and the electrolyte costs considerably more than the active materials today. '"' Small 10-to-15 watt sodium/sulfur cells are now being run in excess of 3,000 cycles, and Ford hopes to test a 5-to-10 MWh battery in late 1981. A second sodium/sulfur concept is being developed by Dow Chemical, and is about 2 years behind the Ford research. Both systems still cost some $3,000 a kilowatt hour, but projections are that the Ford system will be reduced to $30 by 1985-87, while Dow suggests that a $24.50 cost can be attained perhaps a year later from its system. G.E. and EPRI spent about $3.5 million developing this system between 1967 and 1976, and expect to spend about $3.5 million in FY 78.

Systems have been demonstrated which are capable of 90-percent discharge and 77 percent-efficiencies. '[07] The major development problem remains the beta-alumina electrolyte. Poor quality material tends to crack and degrade and seals have been unreliable, Another issue, identified as a problem by G.E,, is the difficulty which may be encountered in scaling the units up to a size where they can be used in large central utility applications. It is expected that large batteries will be constructed from units of 10 to 100 kWh.'[08]

Lithium-Metal Sulfides

Lithium-metal sulfide batteries are being examined primarily by Argonne National Laboratories under a DOE contract. Argonne is now making 150 W/h cells capable

[102] N Yao and J.R Birk, op cit.

[103] Bechtel Corp , op cit.

[104] F G Will, "The Zinc-Bromide Battery: Possible Candidate for E lectric Vehicles and Load Level ing, " Proceedings, 12th IECEC Conference, 1977, p 250.

[105] N P Yao and J R Birk, op cit , p 1107.

[106] Arthur L Robinson, "Advanced Storage Batteries Progress But Not Electrifying, " Science, May 7, 1976, p 543

[107] S. P Mitoff, et al , "Recent Progress in the Development of Sodium Sulphur Battery for Utility Applications, " Proceedings, 12th I ECEC Conference, 1977

[108] S P Mitoff, Op. cit

of 500 deep cycles. In 1982, a 5-to-1 O MWh cell module is scheduled to be tested in Argonne's Battery Energy Storage Test (BEST) facility. Argonne foresees a cost of $29.16 per kWh at full production in 1985-87. Like sodium/sulfur batteries, lithium-metal sulfide devices now cost about $3,000 a kwh to produce experimentally and in small working applications.

Both the sodium/sulfur and the lithium-metal sulfide batteries operate at temperatures above 300 "C, and the combination of high temperatures and reactive materials requires hermetic sealing.[109] There are accompanying seal problems. Questions have been raised about the safety of using the sodium/sulfur system in large numbers unless stringent precautions are taken to protect against a rupture of the containment vessel. Since the lithium battery uses two metals, the chemical reaction caused by a rupture would not be as serious as it would in a sodium cell, which uses two liquids.

Both lithium and sodium are flammable and, under some conditions, explosive.[110] The use of lithium and sodium batteries, therefore, must include careful provision for fire and explosion containment.

REDOX BATTERIES

The REDOX battery presents a tantalizing opportunity for electric storage since devices based on the design may be able to store energy in tanks of inexpensive chemicals; storage costs could be $10/kWh or less. The problem which has plagued the development of these systems for many years is the need for a semipermeable membrane with some rather remarkable properties. The need for a sophisticated membrane could be eliminated, however, if an iron-REDOX design is perfected.

In a standard REDOX battery, the two storage tanks (called the "catholyte reservoir" and the "anolyte reservoir" in the diagram) contain different chemicals. In one design which has received recent attention, the tank connected to the positive terminal contains a solution of Fe^{+2} and Fe^{+3} ions, and the tank connected to the negative terminal contains a solution of Ti^{+3} and Ti^{+4} ions. When the battery is completely discharged, the one tank is filled with $FeCl_2$ and the other with $TiCl_4$. When the battery is being charged, negatively charged chlorine ions drift across the semipermeable membrane and combine with $FeCl_2$, producing $FeCl_3$ and giving up the extra negative charge to the positive terminal. On the other side of the membrane, chlorine ions are released when $TiCl_4$ forms $TiCl_3$, taking an electron from the negative electrode. The electric current from the positive to the negative electrode is matched by the flow of chlorine ions across the membrane. It is important that the membrane be able to pass chlorine ions with minimal resistance, but not allow either the iron or the titanium to pass. If iron or titanium leaks through the membrane, the performance of the device is gradually degraded. NASA-Lewis has been working on systems based on this design for a number of years, and it is hoped that a battery suitable for demonstration in utility applications will be available by 1985.

Iron REDOX

The iron-REDOX battery being developed by the G.E.L. Corporation operates on much the same principle as the REDOX system just described, but uses the same chemical at both electrodes, thereby greatly simplifyin, the requirements placed on the membrane.[112] The basic components of an iron-REDOX battery system are illustrated in figure XI-24.

When the iron-REDOX system is completely discharged, the storage tanks are

[109] Herbert P. Silverman, Lynn S. Marcoux, and Eddie T. See, TRW, Inc, "Development Program for Solid Electrolyte Batteries," Final Report for EPRI, EM-226, September 1976

[110] Chemical Rubber Company, *Handbook of Chemistry and Physics,* 54th Edition, 1973-74, pp B-19, B-31

[111] K. W. Klunder, Office of Conservation, ERDA, private communication

[112] The G.E L. Corporation, Durham, N C, *Performance Status,* January 1977

both filled with iron sulfate $Fe_2(SO_4)$. Charging occurs when an atom of iron is deposited on the negative electrode and two electrons removed from this electrode produce a SO_4^{-2} ion. These SO_4^{-2} ions drift across the membrane and combine with $FeSO_4$ to form $Fe_2(SO_4)_3$, giving up two electrons to the positive terminal in the process. The net reaction is:

$$3FeSO_4 \rightleftharpoons 2Fe_2(SO_4)_3 + Fe$$

All that the membrane must do is insure that the flow of SO_4^{-2} ions between the cathode and annode reaction chambers exceeds the drift of Fe^{+3} ions. Systems have survived more than 1,000 cycles with no observed degradation in performance, and overall efficiencies are in the order of 65 to 75 percent.[113] The sources of these losses are tabulated in table XI-10. It can be seen that rapid discharge rates increase losses largely by resistive heating. With design improvements it may be possible to achieve overall efficiencies of 80 to 85 percent with moderate discharge rates. The system is not damaged by deep discharges.

The reaction chamber with its membrane will account for the bulk of the cost of the iron-REDOX system – the chemicals and the tanks needed to store them will probably cost less than $2/kWh. The cost of this reaction chamber is a direct function of the area of membrane required. G. E. L. estimates that the graphite electrodes they are now using can store about 1 amp-hour per square inch of electrode surface. After this thickness has been deposited, the deposited iron becomes uneven and physically unstable. If a large area is allowed per unit of power delivered, the system is more efficient but costs per kilowatt increase. The cost of reactors capable of delivering different amounts of power per unit of membrane surface is shown in table XI-10. An electric storage system de-

[113] "Dr. R Zito, President, the G.E.L Corporation, private communication, September 1977.

Figure XI-24.—Iron"REDOX Battery Structure and Plumbing Diagram

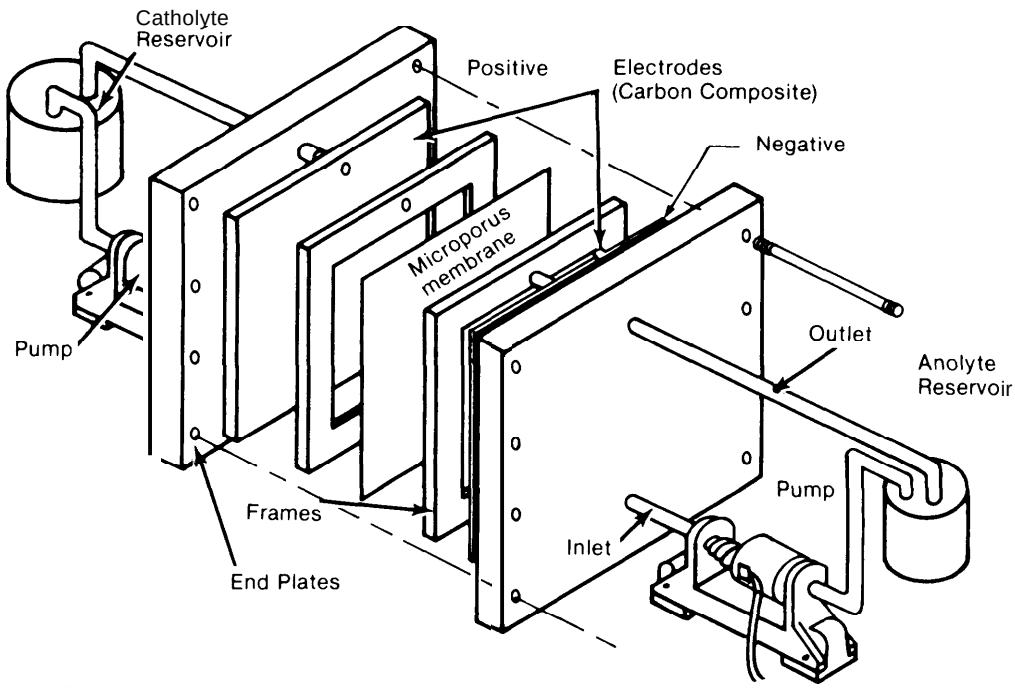

SOURCE: GEL, Inc , Durham, N C

Table XI-10.— Loss Mechanisms of iron-REDOX Batteries

Loss mechanisms	Loss factors: Percent at 0.10 A / in²	Loss factors: Percent at 0.4 A / in²
H_2 evolution . . ., ...	1-2	2.3
pH regeneration . . . . .,	1-2	2-3
Fe + 3 membrane diffusion .	2-3	0.5-2
Joule heating		
—electrolyte	2-4	6-14
—thru membrane	- o	- o
Polarization effects ., . .	14-20	14-20
Fluid pumping, ... ‘1		- 1
Fluid manifold conduction	-1-2	-1-2
Total loss.	22-34	26.5-45
Reactor cost	$68/ kW	$18/kW

SOURCE The G E L Corporation, Durham, N C., September 1977

signed for **use in a solar energy application may require a device capable of storing a large amount of energy for periods of 10 to 20 days, but there would be no** need to **discharge the entire device over a short period. The REDOX device would appear to be well suited for such an application.**

The devices will probably not show significant economies of scale until systems of more than a few hundred kwh of storage capacity are constructed.

G.E.L. is presently constructing a 2.2 MWh iron-REDOX battery system with a peak output of 250 kW for use in the Mississippi County Community College total solar energy system. This DOE-sponsored project should be operating by late 1979. The storage system will consist of 24 reactor modules rated at 11 kW. Each module will contain 130 to 150 bipolar electrodes and will measure approximately 120 x 60 x 240 cm (2 ‘ x 4 ‘ x 8 ‘). The entire system will require 60,000 to 80,000 liters (1 5,000 to 20,000 gallons) of electrolyte. A model of the system is shown in figure XI-25. Electrodes and membranes for the system have been developed for reproduction with acceptable electrical and mechanical characteristics, but improvements can be expected as the design matures. To date, no chemical or mechanical problems have been encountered which would cast doubt on the ultimate practicality of the device. **However, firm conclusions are not possible until information becomes available from a demonstration of the full-scale system.**

POWER CONDITIONERS

Design Alternatives

Most battery storage systems will require some kind of “power-conditioning” system to supervise their connection with sources of charging energy and with the loads met while discharging.

This equipment can serve four functions:

1. **Regulate the rate at which a battery is charged and discharged to protect the battery and extend its useful life;**
2. **Serve as a switching system, and determine whether the loads will be met directly from the onsite generating system, from storage, from the utility, or from some combination of these (in some cases it can also allow the storage to be charged from the utility);**
3. **Rectify alternating current received from the onsite generator or from the utility so that this energy can be used to charge the battery; and**
4. **Invert the direct current produced by the battery or by the onsite generating equipment, creating alternating current whose voltage and frequency meet acceptable standards of uniformity.**

A system which can perform all of these functions is illustrated in figure XI-26. Not all devices will be as complex as the one shown, and designs will differ greatly from one application to another.

The most important design decision is whether to use an inverter. These devices are by far the most complex elements of a power-conditioning system and represent 85 to 95 percent of the cost of a typical power conditioner. Inverters would not be needed

Figure XI-25.— Model of iron-REDOX Battery Facility

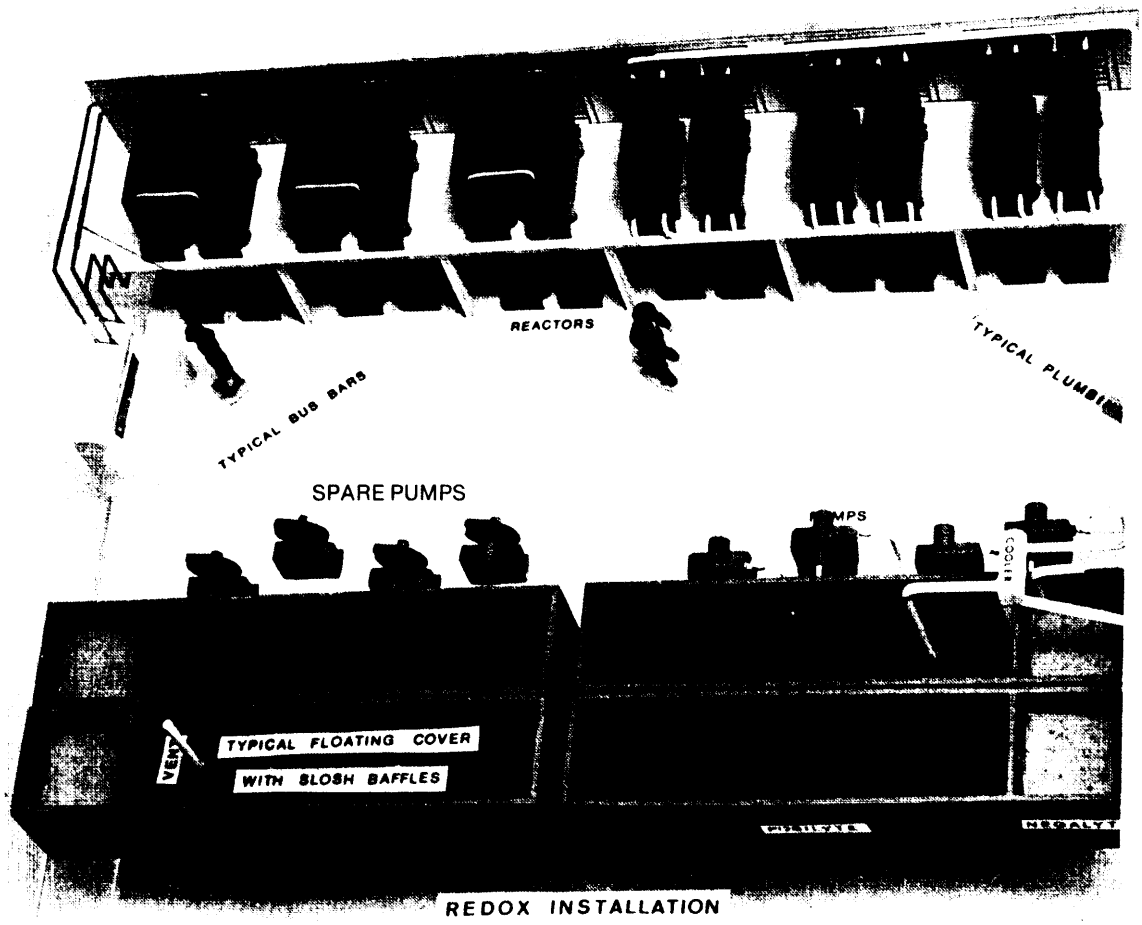

SOURCE: G. E, L.. Inc

Figure XI-26.—The Elements of a Power Conditioning System

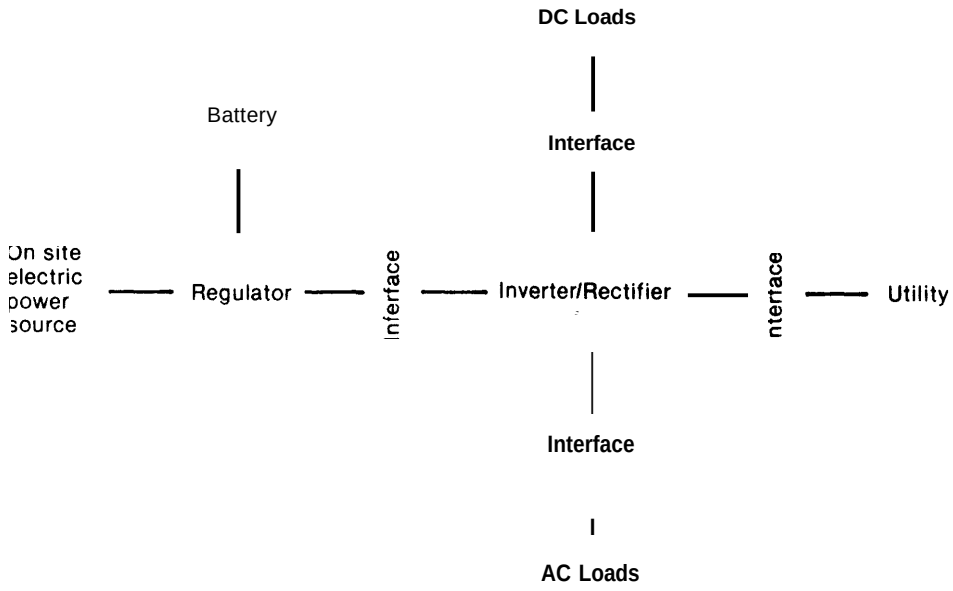

if local loads could be **met by direct current, but these savings could be largely offset by the costs of converting a residence or industry to d.c. operation. A quantitative assessment of this issue is beyond the scope of the current study, but it is possible to outline the major factors which must be considered If conversion to a d.c, system is contemplated:**

- **Over two-thirds of the power required in a typical residence is used in equipment which could easily be converted to d.c. operation. Incandescent lights, heaters, stoves, heating elements in driers, etc., could all operate with direct current without major difficulty.**
- **The only devices requiring a.c. are fluorescent lights, systems with electric motors, and electronic devices such as televisions, radios, and the like. Most of these appliances are currently available in d.c. versions, however, although some are more costly than their a.c. equivalents. A complete line of residential d.c appliances is available for mobile homes.**
- **Direct current systems would require more expensive switches and fuses, The cost of wiring would be higher if low-voltage d.c. were used,**

It **should also be recognized that a d.c, system** which relies **on the utility grid** to **provide backup will need a rectifier. (Most inverters can rectify as well as invert and so would not require separate rectifying equipmerit.) Rectifiers tend to cost about 30 percent as much** as inverters of equivalent **power ratings.**

A typical inverter can provide some kind of fault or short-circuit protection and can provide a.c, synchronized with the utility grid. The cost, design, and performance of inverters vary greatly and are strongly dependent on the quality of the a.c current required. Systems using grid backup will clearly **be required to provide a well-filtered output which matches the grid in frequency and**

'"Iacllity Systems E ngineering Corporation, *ShoppingCenter App/icat/errs ofPhotovoltaic Solar Power Systems,* ERDA Contract (1 1-1)-2748, 1976

phase. Performance is usually specified in terms of the voltage control, and the harmonic content of the voltage produced.

Older units frequently were nothing more than a d.c. motor which drove an a.c. generator, but most modern devices use solid-state components based on silicon-controlled rectifiers. The solid-state devices are usually more reliable and require less maintenance. Most of these systems are "line commutated" in that they rely on utility power to establish the phase and frequency of their a.c. generation. Devices operating independently of grid power (self-commutated systems) are also available, but are more expensive.

Interest in developing inverters of various sizes has come from a variety of places. Small inverters have been developed for military applications, for small onsite generating plants (using windmills and conventional power sources), etc. Larger devices are available from suppliers of interruptible power supplies which are used in hospitals, computer centers, and other installations which cannot afford to lose power when grid electricity is unavailable. Much larger units are in use and being developed for d.c. transmission lines.

The design of interface and regulator systems is quite straightforward and systems are available in a variety of sizes. The complexity and cost of the system will depend strongly on the speed with which the system must shift from one power source to another, and on the system design.

System Performance

The efficiency of modern solid-state inverters is in the range of 92 to 95 percent when the devices are operating at more than about 25 percent of peak capacity. Below this point, the efficiency falls off quite sharply since a fixed amount of energy is required even at zero loads. Figure XI-27 illustrates the part-load efficiency of a typical

Figure XI-27.— Efficiency of a Solid-State Inverter as a Function of Load

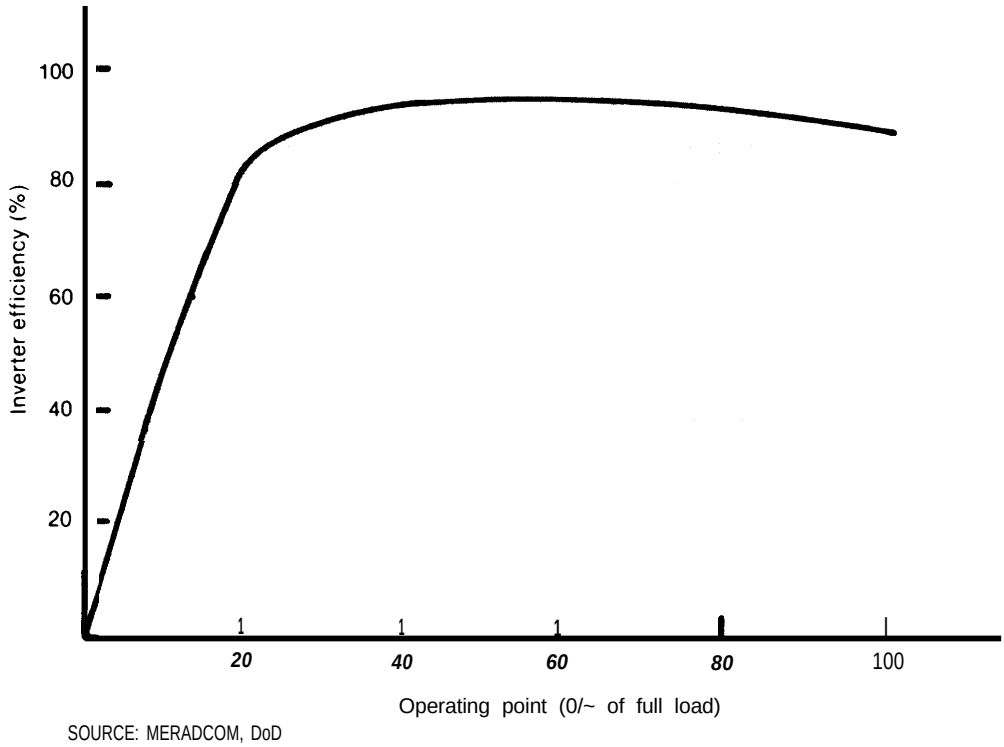

SOURCE: MERADCOM, DoD

sol id-state inverter. The mechanical inverter systems mentioned earlier are typically less efficient than the sol id-state units.

The overall operating efficiency of inverters in small systems will probably be lower than the efficiency of inverters in large systems because there is less load diversity in the smaller systems. This can be expected to result in more operation at partial load.

Voltage regulators are quite efficient at all power levels; typical systems are 98-percent efficient. [115]

BATTERY SYSTEM COSTS

Since there is considerable disagreement about the future price of batteries and supporting equipment for onsite storage systems, cost estimates for battery storage systems will be given in four categories:

1. A near-term price, reflecting the costs of devices which could be purchased in 1976.
2. An estimate based on present estimates of the cost of lead-acid batteries and inverters produced in large numbers (1,000 MWh/yr) for distributed storage applications.
3. An advanced-concept estimate of future prices which assumes that inexpensive, advanced battery systems such as sodium/sulfur or lithium-metal sulfide are successfully developed. This price could also apply to very large contract or Government purchases, where sales overhead could be reduced.
4. A very low-cost estimate which assumes that low-cost advanced-concept systems such as iron-REDOX are successfully developed.

The results of these estimates are summarized in table XI-11 and figure XI-28.

The cost of a battery storage system consists of three major components: the cost of the battery itself; the cost of the power-conditioning system; and the remaining cost which includes installation and the space required to house the system. The cost of each component is treated separately,

[115] Bechtel Corporation, *Energy Storage and Power Conditioning Aspects of Photovoltaic Solar Power* Systems, prepared for Spectrolab, Inc , under Subcontract No 66725, October 1975.

Table XI-1 1.—System Cost Estimates for Near-, Intermediate., and Lena-Term (Including 25-Percent Off)

	Present market prices	Present technology wtth mass production	Advanced concept or advanced lead-acid technology wlth larqe firm contracts (e.g., GSA) 1990-2000	Long-term iron-REDOX
Llfetlme (deep cycles)	2000	2000	2000	2000
0 & M cost (mills/kWh discharged)	028	028	(0 287)	(c)
Replacement cost (% of original)	85	60	100	100
Assumed discharge t l me (hours)	5	5	5	10
First costs				
(1) Commercial and multlfam{ly residentlal systems				
Battery cost ($/ kWh)	88	60	33	11.7
Bulldlng and other costs[a] ($/kWh)	20-3 $\log_{10}C$	13.7-1.8 $\log_{10}C$	5.7-0.7 $\log_{10}C$	5.7-0.7 $\log_{10}C$
Power-condltlonlng costs[b] ($/kW)	400-67 $\log_{10}P$	200-29 $\log_{10}P$	80	80
(2) Home systems				
Battery costs ($/kWh)	96	66	36	
Bulldlng and other costs[a] ($/kwh)	20-3 $\log_{10}C$	13.7-1.8 $\log_{10}C$	5.7-0.7 $\log_{10}C$	
Power-condltlonlnq costs[b] ($/kW)	400-67 $\log_{10}P$	200-29 $\log_{10}P$	60	

[a]C is the capacity of the storage system in kWh. The dependence on capacity is assumed related to inverter cost for a 5-hour system as described in the text.

[b]P is the rated power of the inverter in kW.

[c]Annual O&M assumed to be 1 percent of original cost.

Figure XI-28.— Power-Conditioning Cost Versus Power

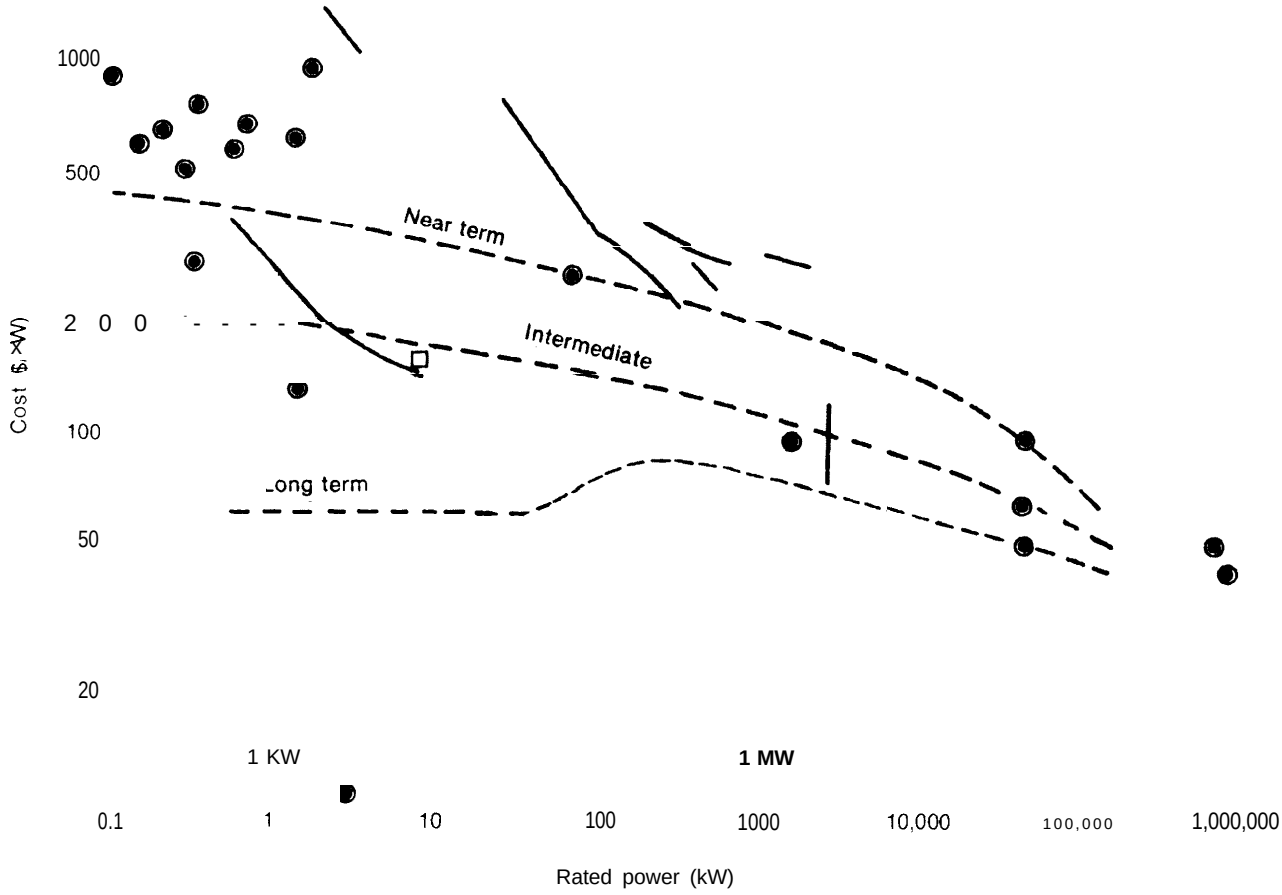

Bechtel Corp , op. cit. This data represents prices for *single units*.

Below 10kW this data represents catalog prices and quotes for commercially available units

The unit at $10/kW (3kW) provides square wave output. The prices between 10 kW and 25 MW are prices for uninterruptible power supplies less batteries which are generally more sophisticated t h an will be required for onsite electric systems
The data for higher power levels represent projected prices for utility load-levellng systems

—The solid line segments represent prices for a single manufacturer as a function of size
= "Gemini Synchronous 8 kW Inserter, " Windworks, P O Box 329, Mukwango. Wis

x Prices for current-fed inverter systems from Peter Wood. AC/DC power Conditioning and Control for Advanced Conversion and Storage Technology EPRI 390-1-1 (1975) The lower price IS for a line commutated system hiqher price IS for a comparable Isolated system

Chapter XI
APPENDIXES

Appendix XI=A

A Technique for Estimating the Allowable Cost of Storage Devices

Computing the amount which can be spent on storage equipment requires a careful comparison of the life-cycle costs of systems with and without storage devices. It is possible, however, to compute the approximate amount which can be spent on storage with the following simple algorithm:

$$C_s = (N_c f_c / k_{1k})(E_d - E_c/\eta_s - M)$$

where

C_s = the installed cost of storage capacity (in $/kWh)

N_c = the average number of storage cycles per year

f_c = the fraction of the storage capacity used in an average cycle

k_1 = the effective cost of capital (see chapter IX)

E_d = the cost of energy available when storage is discharged ($/kWh)

E_c = the cost of energy available for charging storage ($/kWh)

η_s = the efficiency of the storage equipment

M = the average annual operating cost of the storage device ($/kWh of energy stored)

If the storage is not owned by the utility, then the costs E_c and E_d represent the rates charged for electricity during peak and off-peak periods. If the systems are owned by a utility, E_c would represent the cost of energy provided by a baseload plant used to charge storage and E_d would represent the cost of energy provided by a peaking plant. The allowable cost of storage calculated in this way is illustrated for a variety of different assumptions in figure XI-A-1.

Figure XI-A-1.– Permissible Cost of Storage Equipment as a Function of Energy Prices During Storage Charge and Discharge

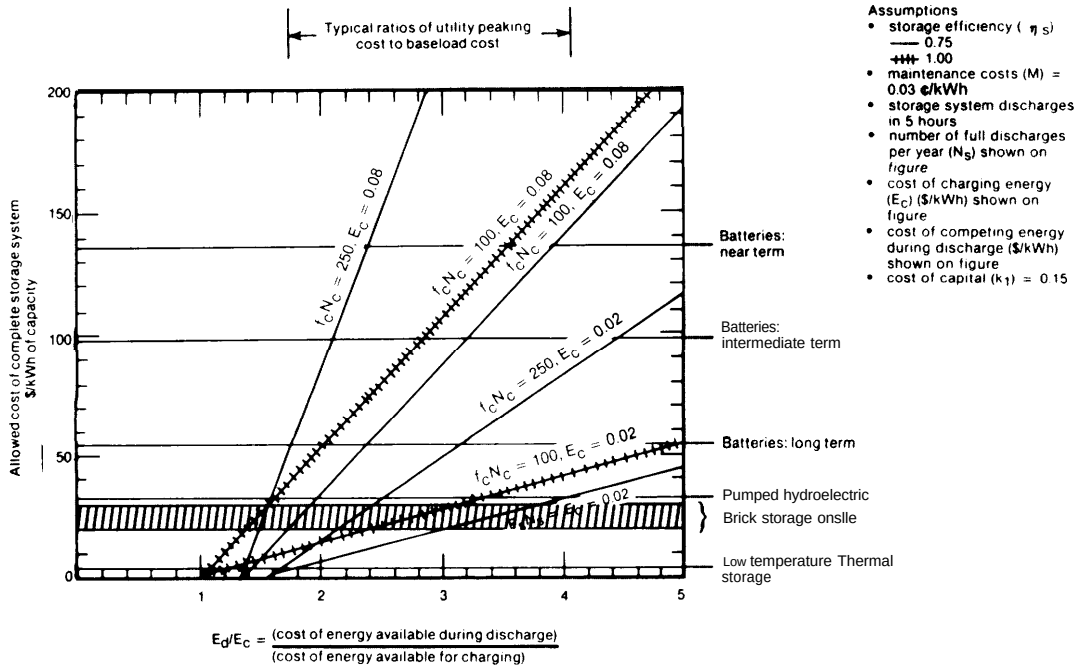

Appendix XI-B

Analysis of Performance

A perfect thermal-storage system would return all of the energy supplied to it at the temperature at which the energy was originally supplied. I n real systems, of course, energy is lost through the containers and the transport system, and the temperatures of fluids which discharge the storage are lower than those used to "charge" the storage with thermal energy. This temperature reduction results not only from a net loss of energy to the surroundings, but also from the mixing of hot and cold fluids in the storage vessel (if a single tank is used), unless stratification is achieved, and from the temperature difference which must be maintained across any heat exchangers which are employed.

One advantage of chemical storage systems is that the products of the reactions can usually be stored at ambient temperatures. In chemical systems, however, temperature losses are the necessary result of the fact that reversible reactions must operate with the forward reaction occurring at a temperature different from the reverse reaction. Energy is also lost during the process of cooling the hot chemicals emerging from the high-temperature reaction chambers down to ambient temperature. Some chemical reactions also require the addition of "process heat" to stimulate intermediate processes, and this heat requirement lowers the overall "efficiency" of the storage process.

The significance of energy lost through insulation, parasitic loads due to pumps, process heat, etc., is clear. This is energy which cannot be recovered for useful work. On the other hand, the significance of storage temperature reductions which do not result in a net loss of energy requires more explanation: 1) heat engines are more efficient at high temperatures, and 2) the performance of solar collectors decreases as the exit temperature of fluids produced by the collectors increases; thus collector performance is maximized if the storage system can be charged from the collectors at a temperature close to the temperature at which the fluids will ultimately be used. In general, systems which use the stored heat only for space heating and domestic hot water will not be as sensitive to temperature degradation as systems which generate electricity or which drive air-conditioning systems directly, but size and cost of even simple systems can be reduced if the temperatures can be kept high.

The designs chosen will depend crucially on the economics of the system. Insulation should be added until the incremental value of the energy saved by insulation equals the incremental cost of adding insulation, Similarly, the sophistication of systems designed to maintain temperatures at constant levels should be increased until the incremental value of the energy provided by these systems is less than the incremental investment needed to prevent the additional drop in temperature.

STORAGE TEMPERATURE LOSS AND HEAT ENGINE EFFICIENCY

In the immediately following analysis, losses through insulation and temperature drops across heat exchangers are ignored for simplicity; they are included later. A detailed analysis of the effect of heat exchangers is contained in appendix A of Bramlette.[1]

The performance of heat engines can be approximated by assuming that their mechanical or electrical output is some fraction (f_e) of their ideal Carnot efficiency.

$$Q_{out} = f_e Q_{in} (1 - T_C / T_h)$$

(constant-temperature storage or two-tank system)

where Q_{out} is the mechanical or electrical energy generated by the heat engine, $Q_{,n}$

[1] I, T Bramlette, et al (Sandia I-a boratories, Livermore), *Survey of High- Temperature Thermal Energy Storage, SAN* D75-8063, March 1976

was the energy originally sent to the storage, T_c is the temperature at which heat is rejected from the engine, T_h is the temperature at which energy is sent to the heat engine (also the temperature of the storage medium), and T_c and T_h are absolute temperatures.

If the temperature of the storage (T_σ) drops from T_h to T_h during discharge because of mixing or other effects, the energy produced by the heat engine will be given by:

$$Q_{out} = f_e \int_0^{Q_{in}} (1 - T_c/T_\sigma) dQ$$

If there is perfect mixing in the storage medium (i.e., a constant temperature in the tank) and no phase change (no losses) is encountered:

$$Q_{out} = f_e Q_{in} \left[\frac{T_h - T'_h - T_c \ln(T_h/T'_h)}{T_h - T'_h} \right] \quad \text{(perfect mixing)}$$

If there is perfect mixing in the storage medium and N phase changes are encountered:

$$Q_{out} = f_e Q_{in} \left[\frac{T_h - T'_h - T_c \ln(T_h/T'_h) + \sum_{i=1}^{N} [1 - T_c/T_{pc}(i)] \Delta H_{pc}(i)/C_p}{T_h - T'_h + \sum_{i=1}^{N} \Delta H_{pc}(i)/C_p} \right]$$

where $T_{pc}(i)$ and $\Delta H_{pc}(i)$ are the temperature and the enthalpy change associated with the ith phase change. C_p is the specific heat. The specific heat is assumed to be constant for all temperatures in this simple approximation.

In the case of a thermochemical reaction, it is assumed that the reaction proceeds to 95-percent completion at a temperature T_h in the forward direction (in the solar collector), and proceeds to 95-percent completion at a temperature T_h in the reverse direction at the user site. In this case:

$$Q_{out} = f_e Q_{in} (1 - T_c/T_h)$$

It is now possible to define a uniform figure of merit or "temperature efficiency" (η_T) for all of these types of thermal-storage techniques used with heat engines, It will simply be the ratio of Q_{out} for the technique in question to Q_{out} for a constant-tern perature storage system.

$$\eta_T = \begin{cases} \dfrac{1 - \dfrac{T_c}{T_h - T'_h} \ln(T_h/T'_h)}{(1 - T_c/T_h)} & \text{(perfect mixing)} \\ 1.0 & \text{(two-tank storage)} \\ \dfrac{T_h - T'_h - T_c \ln\left[\dfrac{T_h}{T'_h}\right] + \displaystyle\sum_{i=1}^{N} \left(1 - \dfrac{T_c}{T_{pc}(i)}\right) \dfrac{\Delta H_{pc}(i)}{C_p}}{\left[1 - \dfrac{T_c}{T_h}\right] \left[T_h - T'_h + \displaystyle\sum_{i=1}^{N} \dfrac{\Delta H_{pc}(i)}{C_p}\right]} & \text{(phase change with perfect mixing)} \\ \dfrac{T_h(T'_h - T_c)}{T'_h(T_h - T_c)} & \text{(chemical reaction)} \end{cases}$$

The average efficiency of a heat engine used with thermal storage is just:

$$\eta_T \, f_e(1-T_c/T_h)$$

if η_e is the heat engine efficiency at temperature T_h. **Note that the heat engine will operate more efficiently than this average figure when the storage is fully charged and the** temperature is closer to T_h than to T_h'. This **"temperature efficiency" is not the same as "round-trip storage efficiency" (Q_{out}/Q_{in}), which is the ratio of the amount of heat which can be recovered from a fully charged system divided by the amount of heat which is required to charge it. "Round- trip storage efficiency" affects al l energy storage systems, while "temperature efficiency" is of concern primarily for systems which drive heat engines from stored heat. While a temperature drop sometimes signals a loss of thermal energy, the "temperature efficiency" is a measure of how the engine performance is reduced as a result of heat being delivered at a lower temperature, and has nothing to do with how much energy was first pumped into storage or how much subsequently leaked out.**

SENSIBLE- AND LATENT-HEAT STORAGE LOSSES

In storage systems using sensible and latent heat there are three primary loss mechanisms: losses through the insulation; temperature degradation in heat exchangers; and temperature degradation due to mixing.

In all of the direct thermal-storage applications considered, it will be assumed that the storage vessels are cylindrical with a radius R and a height L which is equal to 4R.

Losses Through the Insulation

The losses from such a tank will, in general, depend on the thickness (t_i) and conductivity (k) of the insulation and the heat transfer coefficient (h) giving the conductive, convective, and radiative losses of the outer insulation surface to the air or ground. The heat loss rate (Q) from the cylinder just described would be approximately:

$$\dot{Q} = 2\pi(T_s - T_a)k\left[\frac{L}{\ln(R_o/R_i) + k/(hR_o)} + \frac{R_o^2}{t_i + k/h}\right]$$

where T_s is the average temperature of the storage material and T_a is the ambient temperature; R_o is the radius of the cylinder with insulation, and R_i is the radius inside the insulation.

This equation can be simplified in most cases of practical interest by assuming that the thickness of insulation (t_i) is small compared to R_o [i. e.: (R_o-R_i) is much less than R_i] and that the quantity k/h is small compared with t_i. This last condition is equivalent to an assumption that the air or earth surrounding the tank provides no insulation, and is, therefore, a conservative assumption. Figure Xl- B-1 shows that most common insulations have k less than 0.05 Btu/hr ft°F. h will range between the value for air with free convection (l-5 Btu/hr ft^{2o}F) to that of water with forced convection (50 to 100 Btu/hr ft^{2o}F). '

Figure Xl- B-1 .—Thermal Conductivity of Insulation

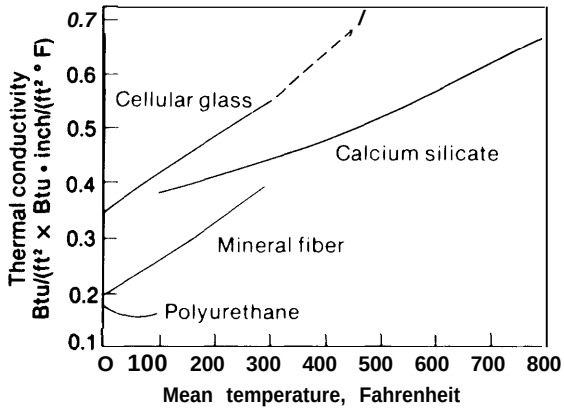

SOURCES:
1. *ASHRAE Handbook of Fundamentals. 1972,* page 293.
2. "Foamglass Insulation" Brochure FI-132 (REV). Pittsburgh Corning Corp., April 1975.

'F T Kreith, *Principles of Heat Transfer,* second edition, 1965, p 15

It can be seen that k/h is small for either assumption. In the remainder of this discussion, a cylindrical storage container with length L = 4R is assumed, unless stated otherwise. With the assumptions $t_i/R << 1$ and $t_i << k/h$, the heat flow Q from the cylinder can be approximated as follows:

$$\dot{Q} = 10\pi(T_s - T_a)R^2 k/t_i$$

As noted earlier, in an actual design, the insulation thickness would be chosen so that the marginal cost of adding additional insulation would be equal to the marginal cost of energy saved by adding this insulation. For simplicity, the Insulation used in the calculations which follow is based *on* the premise that only 5 percent of the stored energy will be lost during the desired storage interval of Ø hours (Ø would be 24 hours for daily storage, 168 hours for weekly storage, etc.). ($Q\Theta = 0.05E_s$) This fraction can then be used to determine the desired thickness of insulation.

The energy stored (E_s) can be written approximately as follows (assuming that the specific heat does not change significantly with temperature).

$$E_s = 4\pi R^3 \varrho \begin{cases} C_v(T_h - T_h') & \text{sensible heat} \\ C_v(T_h - T_{pc}) + \Delta h_{pc} & \text{sensible heat} \\ \quad + C_v(T_{pc} - T_h') & \text{and latent heat} \\ \Delta h_{pc} & \text{latent heat} \end{cases}$$

Alternatively, the volume required to store a given amount of energy is:

$$V_s = \frac{E_s}{\varrho} \begin{cases} [C_v(T_h - T_h')]^{-1} & \text{sensible heat} \\ [C_v(T_h - T_h' + \Delta h_{pc}]^{-1} & \text{sensible heat} \\ & \text{plus latent heat} \\ [\Delta h_{pc}]^{-1} & \text{latent heat} \end{cases}$$

Here T_h and T_h' are the high- and low- temperature limits of the storage cycle and ϱ is the density of the material. C_v and Δh_{pc} are the specific heat and latent heat of phase change per unit volume The desired thickness for the insulation can then be given as follows.

$$t_i = \frac{50k(T_s - T_a)\,\Theta}{R\varrho} \begin{cases} \dfrac{1}{C(T_h - T_h')} & \text{sensible heat} \\ (1/\Delta h_{pc}) & \text{latent heat} \end{cases}$$

Earth Insulation

In practice, the soil itself will provide some insulation for a buried tank. The insulating properties of the soil will depend strongly on local conditions, in particular, ground water flows, The heat conductivity of soil, for example, varies from 0.1 Btu/hr ft°F for dry sand or soil to 2 for wet sand or soil.[3] Assuming that the storage tank is a simple hemisphere, it can be shown that the heat leaving through the earth when equilibrium is reached with soil at temperature T_∞ and the outer tank temperature T_o is given by:[4]

$$Q = 2\pi r_s k_s (T_o - T_\infty) = 2\pi r_s^2 U_s (T_o - T_\infty)$$

where r_s is the radius of the storage and k_s is the soil's heat conductivity. If we write the heat flow through the insulation as $U_i(T_s - T_o)$ per unit tank area, where T, is the temperature inside the tank:

$$\dot{Q} = 2\pi r_s^2 \frac{T_s - T_\infty}{(1/U_s) + (1/U_i)}$$

Note that it is assumed that losses to the surface are minimai. The system can be well insulated on top, buried deeply, or placed under the building to minimize surface losses.

As shown in the equation above, Shelton found that the thermal losses to the ground were proportional to the perimeter rather than the surface area of the hemlsphere He also showed that the earth is equlvalent to a layer of insulation of thickness $k_i R/k_s$, where k_i is the thermal conductivity of the insulation being compared and R is the radius of the storage tank. The thermal conductiv ty

[3] Jay Shelton, ' underground Storage' otHeat In Solar Heat ing System\, *Solar Energy* 17(.2), 1975, p 138

[4] Ibid

of different kinds of soil can vary by more than an order of magnitude, depending on soil composition and moisture content (see table Xl-B-1). A hot storage tank under or near a building or paved area tends to dry out **the soil surrounding it. Moderately dry soil of a type typically found near building sites has a conductivity of 6.0 Btu in/hr ft² "F. (About 40 times the conductivity of polyurethane.)**

If **it is computed that a thickness t_i of insulation with conductivity k, must be used to reduce losses to acceptable levels without using earth insulation, burying the tank in soil can reduce the required thickness to t_i' where**

$$t_i' = \begin{cases} t_i - k_i R/k_s & \text{if } t_i > k_i R/k_s \\ 0 & \text{otherwise} \end{cases}$$

For large storage tanks, the thermal losses are small even if no insulation other than the soil is used. Figure Xl-B-2 shows the annual thermal losses from an uninsulated storage tank (as a percentage of the storage capacity) for a hot water storage system operating between 1200 and 2000 F. While the losses are large for small systems, by the time the storage capacity reaches 1 million kWh (typical of the size needed to provide 100 **percent solar heating and hot water for a high rise apartment), the annual losses have dropped to 6 percent of the storage capacity.**

Shelton also shows, however, that the heat loss through the soil is much greater than the equilibrium for the first few months after the system is installed, as the soil

Table Xl-B-1 .—Thermal properties of soils

Soil description	k Btu/hr ft² °F/ft	α(= k/C_V) ft²/hr °F	C_V Btu/ft³	ρ lb/ft³
Very dry soil[a]	0.1-0.2			
Wet soil[a]	0.7-2.0			
Dry sand[b]	0.1	0.0054	19	
Wetsand[b]	1	0.042	25	
Sandy clay (15% moisture)[c]	0.6	0.015	37	
Concrete[c]	1.6	0.046	34	
Organic soil[a]	0.8	0.021	36	
Wet marshy soil[a]	0.7	0.012	54	
Granite rock[a]	0.26	0.008	31	
Concreted	0.54	0.025	22	144
Dry earth, packed[d]	0.037			95
Sand[d]	0.19	0.011	18	95
Moist high-conductive y soil[e]	1,2	*0.026*	*46*	*102*
Moist medium-low con ductivity soil[e]	0.4	0.013	30	100
Assorted soils[f]	0.3-1.3			90-110

SOURCE. Reproduced from Shelton (op cit.) p 143,

aR. E, Munn, *Descriptive Micrometeorology*, 34. Academic Press, New York (1966).

bR Geiger, Constant values for estimation of heat economy for the agricultural meteorologist *Met Rundschau*, Heft 11 /12 (1948)

cH Lettov, Theory of surface temperature and heat transfer oscillations near a level ground Surface. *Trans* Am *Geophys U* 32, 189 (1951)

d G_{eiger}, op cits, PP 571-572

'L R Ingersoll, F T Adler, H. J. Plass and A. C. Ingersoll, Theory of earth heat exchangers for the heat pump, *Trans Arrr Soc Heating Ventilating Engrs* 57, 167 (1951)

f G_{eiger}, op cits , p 374

Figure XI-B-2.-Annual Thermal Losses From Uninsulated Storage Tank

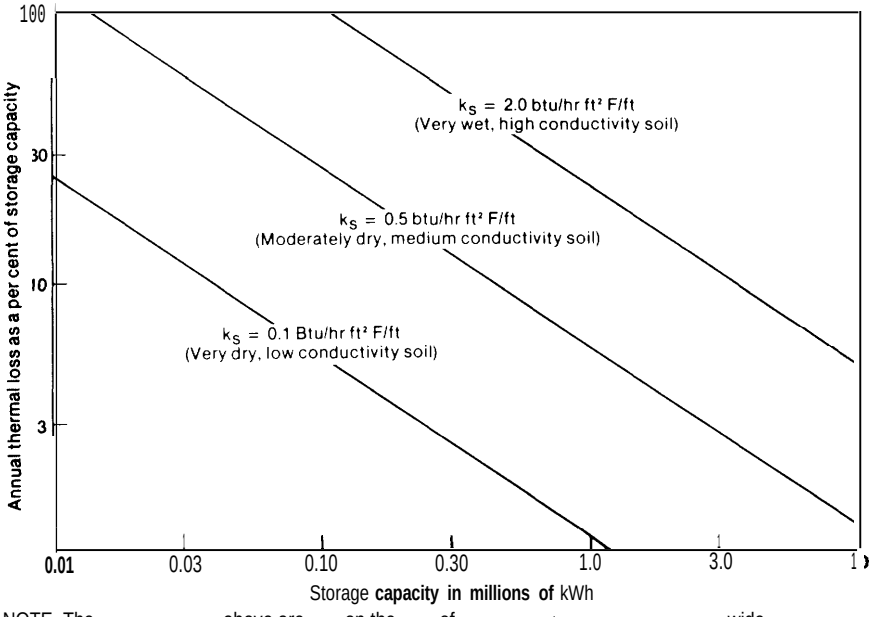

NOTE. The thermal losses plotted above are based on the results of Shelton using water as the storage medium for a wide range of soil conductivities Shelton's results were modified by OTA to assume an average storage temperature of 160°F, a ground temperature of 50°F, and a storage temperature swing of AT= 80°F.

[1]Shelton, op. cit Table XI. B-1.

warms up and dries out. Figure XI-B-3 illustrates this transient behavior.[5] He concludes that roughly a year is required for the soil to develop its full insulating value.[6] For simplicity, this assessment assumes the equilibrium value.

Thus, the total volume of insulation which must be purchased is the greater of

$$V_i = \begin{cases} 10\pi R^2(t_i - kR/6) \\ \text{zero} \end{cases}$$

where k is in Btu in/ft²hr °F. This shows that the insulation cost per kWh of the energy stored is:

$$\frac{C_1\Theta}{E^{2/3}} - C_2$$

(where C_1 and C_2 are positive constants) or zero, whichever is larger.

[5]Ibid
[6]Ibid

Figure XI-B-3.– Rate of Heat=Loss to Ground

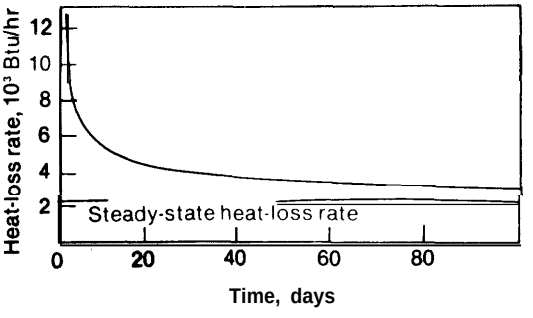

Rate of heat-loss to ground as a function of time after initial start-up. It is assumed that there is no heat demand, so that all the collected solar heat is available to maintain the storage temperature at near its peak level. This curve corresponds to a 6 ft radius ground or gravel hemisphere storage region with a maximum temperature of 170°F with initial surrounding ground temperature of 50°F, and a solar-heat collection rate of 94,000 Btu/hr for eight hours *every* **day (except when maximum storage temperature would be** exceeded). The ground's volume heat capacity is 20 Btu/ft° F and its conductivity is 0-50 Btu/hr ft[20]F/ft.

SOURCE:
J. Shelton (Williams College, Williamstown MA). "Underground Storage of Heat in Solar Heating Systems," *Solar Energy.* Volume 17, No. 2, May 1975, pages 137.143

Shelton's early calculation only assessed the thermal energy lost into the earth and did not include an estimate of the losses from heated earth into the atmosphere. When ground-to-air losses were taken into account in a detailed analog simulation of a 27,000-gallon storage pond, it was found that total losses were approximately twice those caculated by Shelton.' It should be possible to keep seasonal losses in thermal storage ponds at acceptable levels even if these added effects are considered, however. Clearly, this is an area where further analysis is warranted

Reduction in Temperature Due to Mixing in the Storage Vessel

It can be very difficult to compute the temperature gradient which can be maintained in a storage vessel. The result depends strongly on the design of the system (e.g., use of multiple interior baffles, pumping rates, tank orientation). A variety of clever approaches are currently being examined and much more interesting work can be expected. I n the absence of the necessary empirical or theoretical work, it is necessary to make some very crude approximations.

Multiple-Tank Systems

The problem of temperature degradation due to mixing is a problem only for techniques employing sensible heat for storage It is clear that the best way to eliminate mixing is to use separate tanks for the hot and cold liquids. The major difficulty with this is, of course, the added expense of another tank.

In the case of a two-tank system of capacity E_s, each tank is as large as the one- tank volume calculated earlier. The volume of heat-storage liquid is the same as before, and it is pumped back and forth between the half-empty tanks as the storage is charged and discharged Calculation of insulation thickness is similar to the earlier case.

$$t_i(\text{hot}) = \frac{50(T_h - T_a)k\Theta}{R\varrho C(T_h - T_c)}$$

$$t_i(\text{cold}) = \frac{50(T_c - T_a)k\Theta}{R\varrho C(T_h - T_c)}$$

Even though each tank is half full, it is still assumed that heat is lost through the entire wall The insulating value of the earth is still equal to a thickness kR/6 of insulation. The additional cost of the extra tank could be justified if the added performance permitted would lead to significant energy saving through increased heat-engine performance or if the cold tank can be enough colder than the lower limit of mixing storage that the storage capacity of the fluid is significantly increased. The use of multiple tanks in the same manner, but with only one tank empty at any time, would result in lower costs. The analysis in this paper assumes that multiple-tank hot water systems for low-temperature storage are 50 percent more expensive than single-tank systems of the same capacity. However, hot oil storage has been costed on the basis of two tanks

Solid Storage Media

Another approach is to use a solid material such as stone or steel as the storage medium. As noted earlier, some thought has been given to the possibility of using steel ingots or other material for storing energy in specific heat at temperatures as high as 1,0000 F. One concept would use large steel rectangular cylinders stacked together in an insulated container building. Heat would be added and removed by passing steam/water through a series of holes penetrating each steel cylinder. The heat transfer from the hot end of the steel cylinders and the cold ends should be slow enough to permit a temperature gradient of several hundred degrees to be maintained across the storage. This

[7] J Taylor Beard, F A Iachetta, L U Lilleleht, and J W Dickey, *Annual Collection and Storage of Solar Energy for the Heat/rig of Buildings, Report No. 2,* prepared for ERDA under contract No E-(40-I)-51 36, July 1977

would permit the withdrawal of high temperature steam at relatively constant temperature.

An ideal material for such a storage system would have the following characteristics:

- Very low cost,
- High specific heat,
- Low thermal transfer from the hot to the cold side of storage,
- High thermal transfer from the charging tubes to the storage medium, and
- Ability to withstand constant thermal cycling without degradation

The search for an Ideal material is in a very prellminary stage and many promising concepts have not progressed beyond speculation.

Temperature gradients can, of course, also be maintained in tanks of liquids, since hot liquids are usually lighter and rise to the top of a tank. This natural "thermocline" can be assisted by insulating baffles and other devices for reducing convection. The table indicates that liquids are capable of maintaining large gradients if convection can be eliminated.

Reduction in Temperature Due to Heat Exchangers

The rate of heat transfer in a counterflow heat exchanger In which no phase change occurs in the materlals and ın which changes in the specific heat are negligible can be written as follows:

$$Q = UA \frac{\Delta T_h - \Delta T_c}{\ln(\Delta T_h/\Delta T_c)} \quad (= UA\Delta T \text{ when } \Delta T_h = \Delta T_c)$$

where A is the area of the heat exchanger, ΔT_h is the temperature difference between the two liquids at the hot side of the heat exchanger, ΔT_c the temperature difference at the cold side, and U is the overall thermal conductivity between the fluids, The size, and thus the cost of the heat exchanger, will determine the temperature difference ΔT for a given rate of heat exchange. In an ideal system design, the heat exchange area would be chosen so that the marginal cost of increasing the area would equal the marginal value of extra useful energy resulting from a higher temperature emerging from storage.

If one or both of the liquids passing through the heat exchanger undergoes a phase change, the analysls becomes significantly more complex. This situation could occur if a phase-change materlal is used for storage or if water is boiled to steam while passing through the exchanger Designing heat-exchanger systems using materials which sol id if y can be a serious difficulty.

If heat exchangers are used both for charging and discharging, two separate temperature reductions would occur one during charging of the storage and one during discharge. One of these heat exchangers can be eliminated if the same fluid is used in the storage and collector system.

Systems of the type shown in figure XI-13 have a great advantage in that they do not require any heat exchangers (the whole storage device being, in effect, a large heat exchanger). Liquid thermal-storage systems can also be built without heat exchangers if the storage medium is also the heat-transfer fluid.

Costs of Designs Chosen for Analysis

LOW-TEMPERATURE DESIGNS

The design chosen for hot water storage is a tank which is buried in the ground, surrounded by a layer of polyurethane insulation (where necessary) and a vapor barrier which protects the insulation from ground moisture. (See figure xi-2). If the collector uses a fluid other than water, a heat exchanger is also required. Heat exchangers would also be required if the storage were pressurized while the other parts of the system were not under pressure. The primary costs are divided into three categories: the tank itself, the excavation and backfill, and the insulation. Costs presented here exclude the contractor's overhead and profit (25 percent), which is added later.

Excavation, Backfill, and Soil Compaction.

Figure XI-5 shows as a solid line the excavation, backfill, and compaction cost per cubic meter of tank volume as a function of tank volume. Costs were derived from Means[8] using the following assumptions:

Excavated volume is 1.3 times the tank volume to allow for clearance, insulation, etc. Backfill volume is 0.3 times tank volume. Because there is a mobilization and demobilization charge for heavy equipment, small jobs can be done less expensively by hand labor. For tanks greater than 3.35 m^3, excavation is done with a track-mounted, 3½-cubic-yard, front-end loader. Backfill is done by bulldozer for tanks greater than 28 m^3, Soil compaction in all cases is done in 12-inch layers with vibratory plate compactors.

Hot Water or Oil Tanks

Figure XI-5 also plots installed tank costs, excluding excavation and insulation, for a variety of types of tanks suitable for storing heated or chilled water or other fluids. These prices exclude pumps and piping, It can be seen that for the range O to 1,000 m^3 it is possible to have a tank installed, including excavation and backfill, for \$80/m^3 or less. The baseline design assumes \$80/m^3 for this size range. The assumed cost is plotted as the dashed line in the figure.

Insulation

Insulation costs depend strongly on the temperature of the storage and the length of time needed for storage, The insulation chosen for analysis is polyurethane. This material can be foamed on in place for approximately \$0,24/board foot (\$101.71/m^3).[9] (A thin polyethylene vapor barrier adds negligible cost.) This cost might be reduced if a plant dedicated to producing storage equipment manufactured preinsulated tanks. The conductivity of urethane protected by a good vapor barrier is approximately 0.13 Btu inch/hr ft^2 °F.

Analysis

Two cases are considered: 1) a case which applies to storage for use with systems designed to supply domestic heating and hot water (thermal energy supplied between 2000 and 1200 F and returned at 900 F); and 2) systems designed to supply absorption air-conditioners and other industrial process-heat loads (thermal energy supplied between 2700 and 2200 F and returned at 2000 F). Case I requires a storage volume of 0.02013 m^3/kWh_t if mixing is assumed, or 0.0146 m^3/kWh_t if there is no mixing in a single tank. The cost of insulation in these

[8] *Building Construction Cost Data 1976,* Robert Snow Means Company, Inc , R S Godfrey, ed , pp *18, 22, 258*

[9] John L Renshaw of John L Renshaw, Inc (an insulating firm in the metropolitan Washington, D C area), private communication, August 1976.

cases is $101.71 V_i, where V_i is the volume of insulation in m^3.

$$\text{Case I: } C_i = (1.35\Theta E^{1/3} - 3.917E)\$$$

$$\text{Case II: } C_i = (5.29\Theta E^{1/3} - 6.268E)\$$$

where E is the storage capacity in kWh_{th} and Θ is the desired storage time in hours. Note that if the above equations yield a negative result, the earth alone provides sufficient insulation and $C_i = 0$.

The installed cost of buried tanks is assumed to be 80V_s$ for tanks less than 1,000m3. For tanks with volumes greater than 1,000m 3, an appropriate cost per cubic meter was taken from figure XI-22.

$$\text{Case I: } C_t = \$80 \times 0.02013E$$

$$\text{Case II: } C_t = \$80 \times 0.03221E$$

(Systems larger than 1,000m3 would substitute an appropriate tank cost for $80 in the last equation.)

HIGH-TEMPERATURE DESIGNS

Since very few of the concepts which have been suggested for high-temperature thermal storage have ever been fabricated as complete systems, it is difficult to estimate what they would cost if they were produced commercially. An attempt has been made to select for the analysis systems which are as simple as possible, both because such systems show the greatest promise of reaching the market in the next decade and it is much easier to estimate the potential cost of these systems. The analysis is fairly conservative, and may be used to provide an upper limit for future high-temperature thermal storage costs.

In cases where the materials require factory work done off site, the bare materials cost is multiplied by 1.6 to account for overhead, wages, and profit in the factory. This number is obtained from the Department of Commerce input-output tables for "Sector 40: Heating, Plumbing, and Structural Metal Products."[10] Cost of onsite assembly and installation (excluding the contractor's overhead and profit, which is added later) is assumed to be 32 percent of the cost of the components from the factory. This comes from the Department of Commerce tables for "Sectors 11, 12: All New Construction.'" Thus, in cases where better estimates of assembly and installation were not available, bare materials costs have been increased by 211 percent for materials which require additional factory work, or 32 percent for systems which do not.

Oil Storage for Residential Organic Rankine Devices

The highest temperatures used in the baseline-design organic Rankine engines for the single family house are 4200 F (216 °C). For storage at this temperature, a sensible-heat storage system using fuel oil has been chosen. The oil is liquid at all temperatures of interest and thus can be used as a heat-transport system for conveying heat from the collector to the tank as well as serving as the storage medium. Heat exchangers are only needed to transfer heat to the heat engines used to generate electricity, The storage system operates at atmospheric pressure. Since heat engines operating at the small temperature differences available for the single family system are already operating at relatively low efficiencies, the system is not able to tolerate a large drop of temperature at the input of the heat engine, For this reason, separate tanks are used for hot fluids emerging from collectors and cold liquids returned from the thermal loads to ensure a constant high temperature to the inlet. The assumptions and resulting costs are summarized in table XI-9 Costs are computed as shown in table XI-C-1.

---

[9] "" Input-Output Structure of the U S Economy 1963, " Survey *of Current Business.* U S Department of Commerce, National Economics Division, November 1967, pp 16-47

[10] Ibid

Table XI-C-1 .—Assumptions for Hot Fuel Oil Thermal Storage, Single Family House [420" F organic engine]

Two-tank system
No heat exchanger to collectors
Heat engine temperatures (organic Rankine) = 420° to 90" F (216° to 32°C)
[a]Heat exchanger temperature drop to heat engine: 10°c (18" F)
Storage temperature swing: 439° to 108° F (226° to 42 "C)
Heat capacity of storage medium (refined fuel oil) = 0.795 kWh_{th}/m^{3}C
[b]Thermal conductivity of insulation (foam glass): k = 0.5 Btu in/ ft2hr° F
Ground temperature = 55° F (13" C)
Credit for earth's insulation: equivalent to insulation thickness of (0.0833)R
[a]Heat exchanger constant = 4.5 kW/m^{2}C
Temperature efficiency: η_T = 1.0
clns.tailed cost of insulation" (foam glass) = $1 14/m3 Of insulation = $3.24/$ft^3$
Installed cost of buried tanks and excavation = $160/$m^3$ of oil
Installed cost of storage medium (refined fuel oil) = $146/$m^3$
[a]Installed cost of heat exchanger to heat engine = $80/$m^2$ of heat exchanger
Insulation cost = (6.428 $\theta E^{1/3}$ - 0.32595 E)$ or zero
Tanks, excavation, oil = 2.092E$
Heat exchangers = 1.78P$

NOTE Costs exclude contractor's overhead and profit (25%), which IS added later. "E" IS storage capacity in kWh_{th}. "θ" IS storage Interval In hours. "R" IS storage tank radius "P" IS discharge rate in kW_{th}

[a]R W Hallet and R L Gervais, *Central Receiver Solar Thermal Power System, Phase 1, Final Report*, MDC G6040, McDonnell. Douglas Astronautics Company, January 1976

[b]See figure XI-B-1

[c]*Means Building Cons tructionCost Data,1976*, P. 111

Table XI-C-2.—Assumptions for Therminol-55/ Rock Thermal Storage [600 "F heat engine]

Two-tank system: no heat exchanger to collectors; 70% rocks by Volume
Heat engine temperatures: 600° to 100" F (316° to 38° C)
[a]Heat exchanger temperature drop to heat engine: 10" C (18° F)
Storage temperature swing: 618° to 118°F (326° to 48°C)
Heat capacity of Therminol-55: 31 Btu/ft3° F (0.577 kWh/m3° C)
Heat capacity of rocks: 27.3 Btu/ft3° F (0.509 kWh/m3° C)
System heat capacity: 28.4 Btu/ft3° F (0.529 kWh/m3 "c)
[b]Thermal conductivity of insulation (foam glass): k = 0.6 Btu in/hr ft^{2}° F
[a]Heat exchanger constant = 4.5 kW/m^{2}° C
Temperature efficiency: η_T = 1
Ground temperature: 55° F (13° C)
Credit for earth insulation: equivalent to insulation thickness of (0.1)R
[c]Installed cost of insulation (foam glass) = $114/$m^3$ of insulation = $3.24/$ft^3$
[a]Installed cost of heat exchangers to heat engine = $80/$m^2$ of heat exch.
Installed cost of rocks = $0.01/lb x 140 lb/$ft^3$ x 70% = $0.98/ft3 storage = $34.61/m3
Installed cost of Therminol-55 = ($.38matl + $.05 shipping)/lb x 43 lb/ft3 x 30% = $5.55/ft3 = $195.89/$m^3$ storage
Installed cost of buried tanks and excavation = $160/ m3 of storage:
Insulation cost = (9.84 $\theta E^{1/3}$-0.389E)$ or zero
Tanks, excavation, Therminol, rock = 2,655E$
Heat exchangers = 1.78P$

NOTE: Costs exclude contractor's overhead and profit (250/.), which IS added later. "E" IS storage capacity in kWh_{th}. "8" is storage interval In hours "R" is storage tank radius. "P" IS discharge rate In kW_{th}

[a]Hallet and Gervais, MDC G6040.

[b]See figure XI- B-1

[c]*Means, 1976*, Q. 111

Therminol-55/Rock Storage

The Therminol-55/rock-storage system is similar to the hot fuel oil system just examined. Two tanks are used to maintain a high discharge temperature and thus a high "temperature efficiency" (for heat engines). The rocks are assumed to occupy 70 percent of the storage volume. The assumptions and resulting costs are summarized in table XI-C-2.

Storage in Steel Ingots

The steel-ingot system can eliminate the need for heat exchangers, but this requires the use of 150 psia steam in the collector system. This is assumed to be acceptable since the heat engine will operate at this pressure, and thus an operator familiar with the engine should be able to supervise the steam transport system. The ingots could be integrated into the structure of the building or buried in the earth. Earth burial is assumed for the following calculations, although individual installations may present other opportunities. Excavation and backfill costs are taken from figure XI-5. The Jet Propulsion Laboratory (JPL) has calculated that

a system operating between 9500 and 1000 F (510 °and 38 "C) can be discharged by about 68 percent of its total sensible-thermal capacity before the output steam starts to fall below 950° F.[12] The analysis therefore reduces the thermal capacity of the steel accordingly and assumes that al l of the discharge steam is at 9500 F. The following cost assumptions were also taken from the JPL study: steel ingots at $.15/lb; welded headers at $50/hole ($25 each end); rail transportation of materials at $.01/lb; miscellaneous (flow valves, controls, sensors, weatherproofing, etc.) at $.0067/lb of ingots. It also is assumed that the ingots are piled in a stack whose shape is close enough to a cylinder (with length = 4R) that the insulation calculations can be done using equations already developed for cylindrical tanks. The assumptions used are shown in table XI-C-2.

High-Temperature Phase Change Storage

Several designs for storing thermal energy in the heat of fusion of sodium hydroxide have been examined, and operating units of at least two different approaches have been constructed. [3] These units use electricity to charge the storage to about 9000 F. Total system cost for these devices is estimated to be between $1 .35/MBtu and $1.50/MBtu ($4.61-512/kWh$_{th}$). Examining figure *XI-19,* it can be seen that the available energy for use at 9000 F is approximately twice the available energy for the temperature swing between 6200 and 4200 F which is required for the heat engine. The price appropriate for the on site application would thus be approximately $3/MBtu ($10.24/kWh$_t$) JPL has designed a sodium hydroxide storage system for use with a solar system which operates between 6500 and 4000 F for a cost of approximately $3.7/MBtu ($12.63/kWhJ.

The system which will operate with the Stirling cycle will have a very similar design. The costs of the two systems are estimated in parallel in the following discussion.

The heat of fusion storage system is assumed to be produced in factory-assembled modules. Each modular tank contains within it a bundle of sealed, long, narrow, cylinders full of the storage material. The cylinders occupy three-fourths of the tank volume, and heat-pipe fluid circulates in the space around the cylinders, as shown in figure IV-20. During charging, the heat-pipe fluid is heated directly in the solar collector, and during discharging, the heat-pipe fluid condenses at the heat engine, eliminating the expense of separate heat exchangers. Each cylinder is assumed to be 4 feet long and 3 inches in diameter. There are 60 cylinders per tank, and the tanks are 59 inches long and 27 inches in diameter. The cylinder walls are 0.040 inches thick. This is thick enough to contain the weight of the storage material if adequate room is provided for expansion during phase changes. The volume of containment material per cylinder is thus 302 cm^3, and each cylinder can contain 5,260 cm^3 of storage material. The characteristics of potential container materials are shown in table XI-C-3.

The cylinders are assumed to be made of stainless steel. Although stainless steel is not completely resistant to corrosion by pure fluorides, N. V. Philips reports that by adding a small amount of aluminum to the melt, all corrosion is eliminated. Corrosion testing was done for more than 14,000 hours at 850 "C with ordinary 18/8 stainless steel. [5]

Each tank is a double-wall pressure vessel, insulated by a vacuum and multifoil super-

[12] R H Turner (J PL), "Thermal Energy Storage Using Large Hollow Steel Ingots, " *Sharing the Sun: Solar Technology in the Seventies.* J oint Conference, American Section, International Solar Energy Society and Solar Energy Society of Canada, Inc, Winnipeg, Canada, Aug 15-20, 1976, Vol 8, pp 155-162

[3] 'R E Rice, *Thermal Storage for Application to Energy Conservation,* Comstock and Wescott, Inc , April 1975, Citedin Bramlette, et al , (Sandia Laboratories, Livermore) SAN D75-8063

[14] J Schroder (N V Philips Aachen Lab), "Thermal Energy Storage and Control, " *Journal of Engineering for Industry,* August 1975, pp 893-896

[15] J Schroder (N V Philips Aachen Lab), private communication, Jan 13, 1977

Table XI-C-3.—Assumptions for Steel-Ingot Thermal Energy Storage

Steam Rankine engine: no heat exchangers
Heat engine temperatures: 950° to 10O"F (510° to 38°C)
Storage temperature swing: 950° to 100" F (510° to 38°C)
Storage temperature swing: 950" F to 100" F (510°C to 38" C)
Storage medium: cast steel ingots, 60 ft long, 1 ft wide, 1 ft high; 9 axial holes, 2 in diameter per ingot
Headers: 2 in diameter, low-alloy, seamless pipe Schedule 50, formed into thermal stress expansion loop and welded to ingot holes
Steel **heat capacity = 58 Btu/ft3° F**
System heat capacity (20% holes; 32% unrecoverable) = 0.608 kWhth/m3° C
[a]Thermal conductivity of insulation (foam glass): k = 0.8 Btu in/hr ft^2°F
Ground temperature = 55°F (13°C)
Credit for earth insulation: equivalent to insulation thickness of (0.13)R
Discharge temperature: constant 950°F during entire discharge (68% of thermal capacity used)
Temperature efficiency: η_T = 1 (68% of thermal capacity used)
[b]Installed cost of insulation (foam glass) = $114/$m^3$ of insulation = $3.24/$ft^3$
Header cost: $50 per hold, including welding = $265/$m^3$ of ingots
Installed cost of ingots ($.15/lb + $.01 shipping) = $62/$ft^3$ = $2,188/$m^3$
Cost of excavation and backfill = $120 + $1.24/$m^3$ of ingots
Miscellaneous (see text) = $115/$m^3$ = $3.24/$ft^3$: Insulation cost = $(4.03\theta E^{1/3}-0.130E)$ or zero Ingots, excavation, and miscellaneous = 8.95 E$ + 120$

[a]See figure XI- B-1

[b]*Means, 1976,* p 111.

NOTE Costs exclude contractor's overhead and profit (25%), which is added later. "E" is storage capacity in kWh $_{th}$, "θ" is storage interval in hours. "R" is radius of the pile If it is possible to use concrete or some other inexpensive material instead of steel, the cost could be reduced by a factor of three or more

insulation. This type of insulation has a thermal conductivity of 0.0049 Btu in/hr ft² °F. [16] The cost of the metallic foil insulation is estimated at $2.00/ft² of surface area, and the resultant thermal conductivity is so low that even seasonal storage results in "very small heat losses.'" [7] The tank walls are assumed to be ¼-inch stainless steel, fabricated at $2.00/lb. [8] The two heat pipes are assumed to add $200 each to the cost of each tank. [9]

The installed cost of the cylinders is estimated using the materials costs in tables XI-4 and XI-C-4, adding $().1()/kg for shipping, and multiplying by the factor of 2.11 to account for factory and onsite fabrication and installation. The cost assumptions are summarized in tables XI-C-5 through XI-C-7.

BATTERY STORAGE COSTS

The costs of battery storage used in the analysis conducted in this study are summarized in figure *XI-28* **and table XI-11. There appears to be a reasonable concensus that costs as low as $55/kWh are feasible in the "intermediate term, " but a considerable amount of disagreement about how far prices will fall in the long term. The Bechtel summary of battery costs estimated that advanced batteries could be produced for** *$10* **to $25/kWh[20] while other sources have estimated that prices below !$25/kWh are unlikely .21 22 The "long-term" cost $11/kWh shown in the table reflects an assumption that a low-cost iron-REDOX system has been developed.**

Neither estimate of O&M cost given in table XI-8 would add appreciably to the overall costs of battery storage. Even if O&M costs for advanced batteries are a factor of 2 higher, the O&M costs would still be minor. Consequently, 0.0284/kWh has been used for all three cases in table XI-11.

"N. E. Polster and W R. Martini (University of Washington), *Self-Starting, Intrinsically Control/cd Stirling Engine, 11th* **I EC EC.**

"R L. Pens and R. J. Fox (Aeronautronic Ford Corp. and Walt Disney Productions), ***A Solar/Stirling Total Energy System,*** **unpublished, 1976.**

[18] **Ibid,**

[19] **Ibid**

[20] *An* **Engineering** ***Study of a 20 M W, .200*** *MWh Lead-Acid Battery Energy Storage Demonstration P/ant,* Bechtel Corporation, **ANL Contract No. 31-109-38-2692, October 1975.**

[21] **James Birk (E PRI), private communication, Jan.** ***20,1977.***

[22] *An Assessment of Energy Storage Systems Suitable for Use by* Electric Utilities, *Final Report* **by** PSEG on ERDA Contract No. E (11-1 }2501, Vol. II, July 1976, pp. 4-60.

Table XI-C-4.—Containment Materials

Material	Density (kg/m 3)	Yield strength • (N/m2)	cost ($/kg)
8515-70 carbon steel. . . .	7.8 x 10^3	3.1 x 10^8	.22
304 stainless steel[ab] . . .	7.9 x 103	2.4 X 10^8	1.76
Steelite-21 [abcde]	8.3 X 103	5.7 x 108	40.00
Inconel [ce]	7.8 X 103	2.7 X 108	**11.00**
Hastelloys[abcde]	9.0 x 103	3.8 X 108	26.00

• Room temperature values

[a]Oxidation resistant

[b]High-temperature alloy

[c]Resistant to chemical attack

[d]Reslstant to most fluorides

[e]Resistant to fluorides if Al is added to the fluoride

SOURCES T T Bramlette (Sandia Laboratories, Livermore), compiled for OTA, 1976. Note e added by J Schroder (N. V. Philips Aachen Lab), private communi - cation, Jan 13, 1977

The salvage value (or reduced replacement cost) for near-term batteries is principally the value of the lead in the battery. The replacement price for intermediate-term batteries is based on a crude average of the fractional replacement prices projected in table XI-8. Most of the advanced batteries use inexpensive materials which would have negligible salvage value. Consequently, no salvage value is assumed. If one of the batteries containing lithium were used, the replacement price would clearly be less than the inital price, since lithium can be effectively recycled.

Battery storage systems for utility applications are expected to use a large number of cells which have individual storage capacities of 5 to 40 kWh. [23] These are the systems for which virtually all of the available cost projections apply. It is expected that smaller systems will require somewhat smaller cells to obtain reasonable system voltages Detailed studies of the relative cost of such systems have not been completed. However, the direct product cost ($/kWh) for a 7 kWh mass-produced cell would probably be about 14 percent higher than a 50 kWh cell, and batteries in the 20 kWh size range may cost 20 to 25 percent more than batteries for large storage facilities. Detailed design studies now underway may change this estimate. 24

Table XI-C-5 .—Latent-Heat Storage Tank Assumptions

Volume of stainless steel in tank wall = 0.04477m3
Surface area of tank = 38.48ft2
Tank wall cost = (0.0447 m3)(7,900kg/m3)(2.2lb/kg) ($2/lb) = $1,560
Insulation cost = (38.48ft2)($2.00/ft2) = $77
Heat pipe cost = $400
60 cylinders per tank
Cylinder cost = (302cm3)(.0079kg/cm3)($1.86/kg) (2.1 1) = $9.36/cylinder
NaOH cost + (0.00526 m3)(1,784kg/m3)($0.65/kg) (2.11 = $12.87/cylinder
NaF/MgF2 at $0.50/lb = (0.00526m3)(2190kg/m3) ($1.20/kg)(2.11) = $29.17/ cylinder
NaF/MgF2 at $0.25/lb = (0.00526m3)(2190kg/m3) ($0.65/kg)(2.11) = $15.80/ cylinder
Volume of storage material per tank = 0.3156m3
Overall volume of tank = 0.60m3
Total installed tank, NaOH: $3,371 plus excavation and backfill
Total installed tank, $0.50 NaF/Mg F2: $4,349 plus excavation and backfill
Total installed tank, $0.25 NaF/Mg F2: $3,547 plus excavation and backfill

[23] James R Birk, *The Lead-A c/d Battery for Electric Utilities A Review and Analysis,* presented at the ERDA EPRI Lead-Acid Battery Workshop 11, Dec 9,1976

[24] Nick Maska lick (Westinghouse Corporation), private communication, Jan. 31, 1977

Table XI-C-6.—Assumptions for NaOH Latent-Heat Storage [600° F heat engine]

Heat pipe to collectors and to engine heat exchanger
Heat engine temperatures: 600°-400° F (316°- 204–C)
[a]Heat exchanger temperature drop, heat pipe to engine: 10°C (18°F)
Storage temperature swing: 618°-418° F (326°-214°C)
[b]Melting temperature: 320°C (608° F)
[b]Heat of fusion: 0.0442 kWh/kg
[b]Solid/solid phase change at 295°C (563° F)
[b]Heat of solid/solid phase change: 0.0442 kWh/kg
[b]Specific heat, liquid: 5.75 x 10^{-4} kWh/kg°C
[b]Specific heat, solid (295°-320°C): 5.97 x 10^{-4} kWh/kg°C
[b]Specific heat, solid (below 295°C(: 5.89 x 10^{-4} kWh/kg°C
"Temperature efficiency": η_T = 0.92
Credit for earth insulation: none
Heat capacity per tank: (0.3156m^3) (1784kg/m^3) (0.154kWh/kg) = 86.7kWh
Cost of excavation and backfill: (see figure IV-22)
- E ≤ 484 kWh; cost = $0.165/kWh
- 484 < E < 4,046 kWh; cost $70 + $0.0208/kWh
- E ≥ 4,046 kWh; cost = $120 + $0.00858/kWh

[c]Cost of instruments & controls: $1,000
Total storage cost:
- E ≤ 484 kWh; cost = (1,000 + 39.05E)$
- 484 < E 4,046 kWh; cost = (1,070 + 38.90E)$
- E ≥ 4,046 kWh; cost = (1,120 + 38.89E)$

NOTE Costs exclude contractor's overhead and profit (250/.), which is added later. "E" is storage capacity in kWh_t Insulation is adequate for seasonal storage

[a]Hallet and Gervais, MDC G6040
[b]See table xi-7
[c]R L. Pens and R J Fo x.

Table XI-C-7.–Assumptions for NaF/MgF2 Latent-Heat Storage [1 ,400°F heat engine]

Heat pipe to collectors and to engine heat exchanger
Heat engine gas temperature: 1,400°F (760°C)
[a]Heat exchanger temperature drop, heat pipe to engine: 18°F (10°C)
Storage temperature swing: 1,550°-1,418°F (843°-770°C)
[b]Melting temperature: 1,530°F (832°C)
[b]Heat of fusion: 0.174 kWh/kg
[b]Specific heat, liquid: 4.07 x 10^{-4} kWh/kg°C
[b]Specific heat, solid: 4.1 x 10^{-4} kWh/kg°C
"Temperature efficiency": η_T = 1.0
Credit for earth insulation: None
Heat capacity per tank: (0.3156m^3)(2,190kg/m^3) (0.2040kWh/kg) = 140.1 kWh
Cost of excavation and backfill: (see figure XI-5)
- E ≤ 782 kWh; cost = $0.102/kWh
- 782 < E < 6,538; cost = $70 + $0.0129/kWh
- E ≥ 6,538; cost = $120 + $0.00531/kWh

Cost of instruments & controls: $1,000
Total storage cost:

(.50 NaF/mg F2 $/kg)
- E ≥ 782 kWh; cost = (1,000 + 31.14E)$
- 782 < E < 6,538; cost = (1,070 + 31.05E)$
- E ≥ 6,538; cost = (1,120 + 31.05E)$

Total storage cost:

(.25NaF/ F2 $/kg)
- E ≥ 782 kWh; cost = (1,000 + 25.42E)$
- 782 < E < 6,538; cost = (1,070 + 25.33E)$
- E ≥ 6,538; cost = (1,120 + 25.32E)$

[a]Hallet and Gervais, NDC G6040
[b]See table XI-7

For purposes of this study, we increase the large system prices by 10 percent for the commercial and multifamily residential systems, and 20 percent for home systems.

POWER-CONDITIONING COSTS

As noted earlier, the bulk of the cost of power-conditioning apparatus results from the cost of the inverter system. Estimates of the cost of voltage regulators vary from 1 to 6 percent of the cost of the inverter. The cost of the interface varies from about 10 to 20 percent of the inverter cost for systems in the kilowatt range to about 2 percent of inverter cost for systems in the megawatt range. Estimates of current and potential power-conditioning costs are shown in figure XI-28.

The prices chosen to represent "near-term," "intermediate," and "speculative" technologies are chosen somewhat arbitrarily to represent the spectrum of estimates shown. The "near-term" prices selected are somewhat lower than the average prices of contemporary power-conditioner devices since many of the units now available are

overdesigned for solar application, and many of the small systems shown operate at voltages much lower than would be required for solar applications (low-voltage systems are usually more expensive than higher voltage devices with similar power capabilities).

In the intermediate term, it can be assumed that at the lower power levels, increased production volume will lower prices, although in many of today's systems, standard components such as inductors and capacitors represent a significant fraction of the cost, and this will limit the production economies possible. At higher power levels, systems will probably continue to be essentially custom-designed, but increased engineering experience should lower costs somewhat, as assumed for the intermediate case of figure XI-28.

in the longer term, it can be assumed that power-conditioner units in the smaller sizes can be made for substantially lower prices by mass-producing units designed with power transistors so that the use of components such as inductors is minimized. Westinghouse has estimated that such units could be produced for $50 to $70/kW.[25] At intermediate and higher power levels, market size and component size will probably prevent automated production, and the price may go up for some sizes as suggested by the curve sketched for the "long-term" case in figure XI-28

It should be noted that the prices discussed so far have been in terms of rated *capacities* which are related to the normal load of the system. Most systems can actually supply 1.5 to *3* times the rated capacity, depending on the specific characteristics of the power conditioner and the load.[26] In the integrated system cost runs, it has been assumed that power conditioners have a peak capacity 1.5 times their rated capacity.

BUILDING AND OTHER COSTS

In addition to the battery and power conditioner costs, there is a significant cost associated with installation, electrical wiring, and instrumentation, and the room in which the battery system will be housed. No detailed estimates of these costs were available for systems of the size considered in this study, It was assumed that the batteries would be located in the basement of homes or in the equipment rooms of apartments and shopping centers. Unfinished basement space in such buildings costs about $5.00 to $7.50 per square foot. "Building and Other Costs" were assumed to be twice the cost of the space and it was assumed that the batteries we arranged so there were 2 to 3 kWh per square foot of floor space for present lead-acid battery systems. It is assumed that "advanced battery systems" will have higher energy densities, and require less space. REDOX batteries do not have a high energy density but it should be easier to integrate the liquid storage tanks which make the system bulky into building space than it would be to find space for more complex systems requiring high temperatures or potentially hazardous materials It was therefore assumed that the building and other costs associated with the REDOX systems would be no greater than those of other batteries. It was assumed that the "building and other costs" and power conditioner costs scale with battery capacity in the same way (see table XI 1-11)

[25] F Pittman, Program Manager for Westinghouse Electric Corporation Research Laboratories, *Final Report on Conceptual Design and Systems Analysis of Photovoltaic Power Systems*, ERDA Contract No E (11-.2744), December 1976

[26] Peter Wood, Westinghouse, private communication, Jan. 18, 1977.

Chapter XII

HEATING AND COOLING EQUIPMENT

Chapter XII.— HEATING AND COOLING EQUIPMENT

Page

Introduction 507
Electric Air-Conditioners and Heat Pumps.... 507
System Performance. 510
Potential for Improving Performance 511
Direct Fossil-Fired Heating and Air-Conditioning Equipment 514
Heating Equipment. 514
Potential for Improving Performance 517
Absorption Air-Conditioning ... .519
System Performance. 520
Conventional Gas and Electric Water Heaters. 522
Operating Costs. 522
Adaptation of Conventional Equipment to Solar Power 523
Solar Heat Engines. 524
Solar Absorption Equipment 524
The Adsorption Cycle System 524

LIST OF TABLES

Table No. Page

I. Cooling Coefficients of Performance for Systems Smaller Than 65,000 Btu/Hour. ...5lO
2. California Standards for Cooling Equipment 511
3. Average Cost of Maintenance Contracts for Residential Heating and Cooling Equipment 522
4. Cost of Maintaining Commercial Heating and Cooling Equipment 523

LIST OF FIGURES

Figure No. Page

I. A Typical ''Split System" Heat-Pump Installation. 508
2. A Typical Packaged Outdoor Chiiler 509
3. 1976 Air-Conditioning Performance of Units Smaller Than 65,000 Btu/Hour 510
4. Performance of the Carrier Split-System Heat Pump 512
5. The Seasonal Performance of Heat-Pump Units as a Function of Local Climate 513
6. Estimated Cost of lncreasing the Performance of Air-Conditioners From the lndustry Average COP of 2.0 to the Performance Levels Indicated 513
7. Some Examples of Proposed Advanced Heat-Pump Cycles. 515
8. Residential Heating Systems. 516
9. Efficiency of Gas Furnaces 516
10. A Fossil-Fired Heat-Pump System 517
11. Basic Single-Effect Absorption Refrigeration Cycle 519
12. Estimated Refrigeration Unit Cost Per Ton 520
13. Coefficient of Performance Versus Supply Water Temperature. 521
14. An Adsorption Chiller. 525

Chapter XII
Heating and Cooling Equipment

INTRODUCTION

This chapter has two major objectives: to estimate the cost of providing space conditioning from conventional electric equipment as well as from oil- and gas-fired devices, and to analyze the performance of systems which can be coupled with solar devices. Technologies examined include electric and absorption air-conditioners, heat pumps, and conventional gas- and oil-fired boilers. Systems examined are compatible with loads varying from that of a single family residence to the requirements of a district heating system.

Much of the data needed to perform a careful study of the cost of providing heating and cooling from conventional equipment is not easily available. Some of the relevant data remains proprietary and, in a number of cases, adequate measurements of performance in realistic operating environments have never been taken. A detailed study of the performance of many heating and cooling devices is now underway at the Building Environment Division of the National Bureau of Standards. A more accurate comparison of systems will be possible when that study is completed.

Given the uneven quality of the information utilized, no attempt should be made to use the results to judge the relative merits of different conventional approaches to space-conditioning. The object of the cost computations is simply to provide a reasonable background against which to test the economic merits of solar equipment. These computations are based on the most reliable information now available to OTA, but the lack of precision is freely acknowledged.

ELECTRIC AIR-CONDITIONERS AND HEAT PUMPS

A typical residential air-conditioner/heat-pump installation is illustrated in figure Xl 1-1, and a large central chiller is shown in figure Xl 1-2. Both units employ the same basic refrigeration cycle, although the smaller units usually cool and dehumidify room air directly while the larger systems typically produce chilled water which is piped to fan-coil units **in various parts of the building. The cooling systems have three basic components: 1) a unit which permits a refrigerant to expand, vaporize, and absorb heat from the room air (or water system); 2) a compressor which compresses the heated vapor (increasing its temperature); and 3) a condenser located outside the building which rejects the heat absorbed from the room air into the atmosphere (condensing the compressed vapor to a liquid).** In ''single-package' **units, all three functions are provided in the same unit and can be connected directly to the ductwork (or chilled water system)** of the **building.** In "split-system " **devices, refrigerant is sent to an air-handling unit inside the building. (This system is illustrated in figure Xl** l-l.) Another distinction which is frequently made **involves the technique used to compress the refrigerant vapor. Smaller units typically use a simple piston system for compression and are called "reciprocating" units. Larger units may use centrifugal pumps or screw compressors for this purpose.**

Heat pumps use the same three basic components as the air-conditioners described above, but the cycle is reversed. In **the heating cycle, the indoor air absorbs heat from the refrigerant and heat is acquired by the refrigerant from the outdoor**

Figure XI I-I .—A Typical "Split System" Heat-Pump Installation

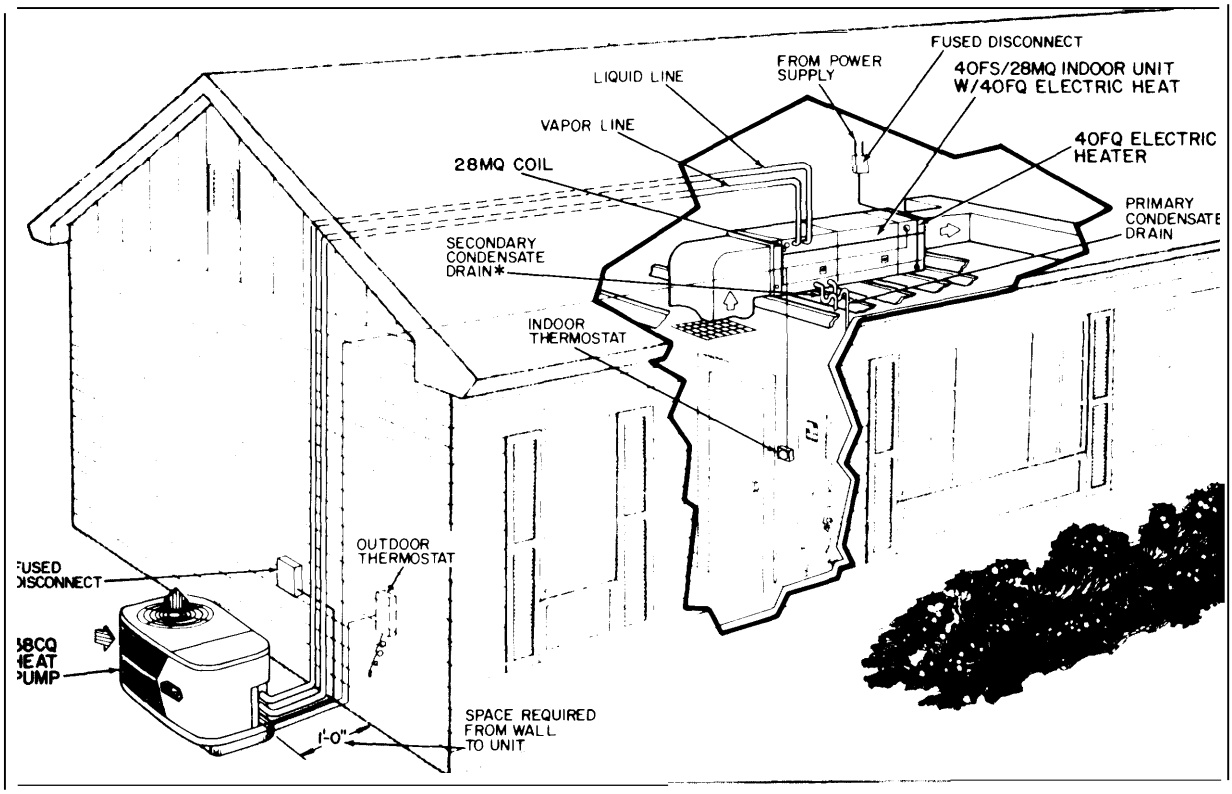

SOURCE. Carrier Corporation

fan unit (the "condenser" in the cooling model).

Heat pumps which can extract useful energy from outdoor air temperatures as low as 00 F are now on the market, although system performance is seriously degraded at low temperatures. The electricity used by the system can be considerably reduced if a source of heat with a temperature higher than that of the outside air can be found. Lakes or ground water, for example, are usually above ambient air temperatures during the winter and can be used to provide a source of input heat if they are available. Many buildings have sources of heat (such as lighting, mechanical equipment, rooms with large southern exposures, etc.) which can be recovered and used to heat a storage reservoir. A number of small heat pumps can be located throughout a building. Some of these pump heat from warm areas into the water reservoir, while others recover this energy and pump it into rooms requiring heating. Solar energy can also be used to provide a source of heated water. Systems which extract heat from water are called "water-te-air" heat-pump systems, while units extracting energy from the air are called "air-to-air" systems.

While less than half of the residential units in the United States were equipped with air-conditioners in 1974, the demand for air-conditioners is growing.[1] in 1974, about 45 percent of all single family homes and 34 percent of all multifamily dwelling units were equipped with some type of air-conditioner. [2] A DOE forecast estimated that

[1] Gordian Associates, Inc, *Evacuation of the Air-to-Air Heat Pump for Residential Space Conditioning,* prepared for the Federal Energy Administration, Apr 23,1976, p. 114

[2] Ibid , p 115

Figure XII-2.– A Typical Packaged Outdoor Chiller

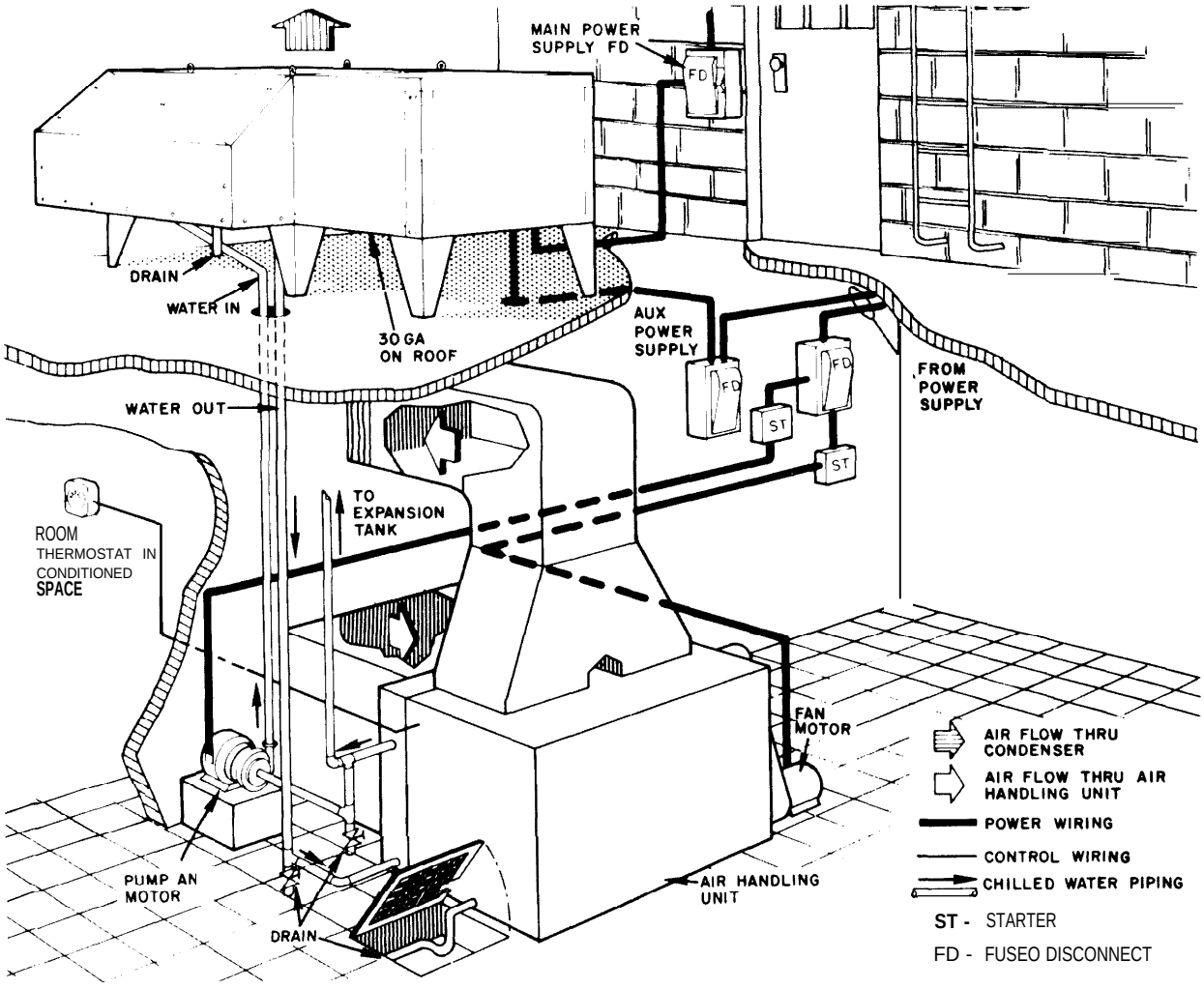

SOURCE Carrier Packaged Outdoor Air-Cooled Liquid Chillers Carrier Corporation 1974, Form 30GA-5P

by 1985, air-conditioning will be installed in 75 percent of all residential and commercial buildings and will require about as much energy as electric heating. [3]

Heat pumps are likely to have a far smaller impact on overall U.S. energy consumption unless some dramatic change occurs in public acceptance of the units. Less than 1 percent of U.S. homes currently have heat pumps, and only about 7 to 8 percent of the new housing starts in 197.5 used the **system.** [4] **The growth of the market has been slowed by the sensitivity of buyers and builders to the initial cost of the equipment (which is higher than conventional electric-resistance heat), and by the fact that regulated gas prices and promotional electric prices have made the cost of operatin, competitive heating systems artificially** low **Concerns about reliability have also been a problem. Some of the heat pumps marketed in the early 1960's were extremely unreliable, and sales of the units fell steadily be-**

[3] *National Plan* for *Energy Research Development and Demonstration, Volume I,* ERDA-48, p B 10

[4] Gordian **Associates** Inc , op cit , p v

tween 1965 and 1970. While most of the reliability problems have been resolved, a recent study showed that the problem has not vanished. The compressors examined in the study failed at a rate which varied from 3.6 percent to an astonishing 23.3 percent per years A 5-percent annual failure rate is considered tolerable for this kind of space-conditioning equipment, and apparently very few manufacturers were able to meet this standard.

In spite of their relatively small share of the U.S. space-conditionin, market, heat pumps are likely to be in direct competition with solar equipment during the next few decades. They would tend to appeal to the same category of buyers, those willing to consider life-cycle costing, and are likely to offer the lowest life-cycle cost of any non-solar space-conditioning system if the price of heating oil and natural gas increases significantly.

SYSTEM PERFORMANCE

The performance of heat pumps and air-conditioners now on the market varies greatly. Figure XI I-3 indicates the performance of air-conditioners smaller than 5½ tons now on the market. The difference in performance reflects both the quality of design and the cost of the unit. High-performance units may also result from a fortuitous combination of components. Manufacturers cannot afford to design condensers optimally suited for all compressors to which they may be attached, and some combinations of these units (in the absence of information of comparable quality about the variety of systems examined here) may therefore result in a high-efficiency system. As a result, while there are a few units on the market with very high efficiencies (figure XII-3, for example, indicated that 10 percent of the units on the market have a coefficient of performance (COP) greater than 2.5), this performance is not available in all size ranges.

[5]Ibid

Figure XII-3.— 1976 Air-Conditioning Performance of Units Smaller Than 65,000 Btu/Hour

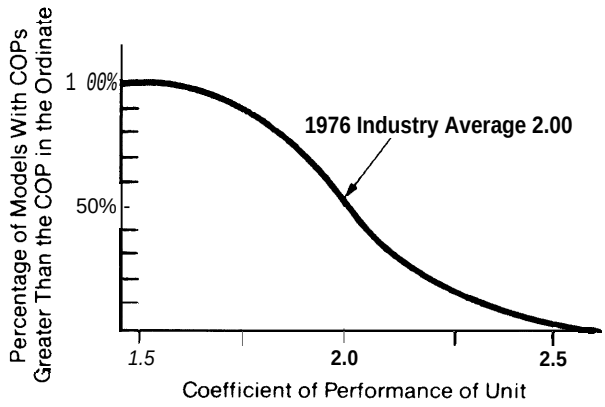

SOURCE: OTA.

Tables XI I-I and XI I-2 give some indication of the performance which can be expected from different cooling devices, The 1976 industry average COP was 2.00.

Heat pumps were about 5 percent less efficient than the average air-conditioner, There are a variety of reasons for this. Heat pumps cannot be optimized for maximum cooling performance as somewhat more complexity is required in the coolant piping, and the valve which switches the direction of the refrigerant when the system is changed from heating to cooling introduces some inefficiencies.

Under some circumstances, small window units are capable of better performance than central air-conditioners; central units

Table XII-1 .—Cooling Coefficients of Performance for Systems Smaller Than 65,000 Btu/Hour (1976 industry averages)

	Average COP
All ARI listings	2.00
Split-system cooling	2.00
Single-package cooling	1.90
Single-package heat pumps	1.94
Split-system heat pumps	1.90

SOURCE George D Hudelson (Vice President-Engineering, Carrier Corporation), testimony before the California State Energy Resources Conservation and Development Commission, Aug 10, 1976 (Docket No 75, CON-3)

Table XII-2. — California Standards for Cooling Equipment

System type	Standard after 11/3/77*	Standard after 11/3/79*
Central Air-Conditioners		
Heat pumps (cooling mode)	1.96	2.2
Air-conditioners	2.05	2.34
Room Air-Conditioners		
All systems with capacity greater than 20,000 Btu's	2.05	—
Other heat pumps	2.08	—
Other air-conditioners	2.20	—
All systems using voltages greater than 200 v.	—	2.40
Other heat-pump systems	—	2.43
Other air-conditioners	—	2.55

*No system may be sold in the State after this date with a COP below the standard

must pump chilled air or refrigerant over significant distances, and require more energy to operate the pumps and fans needed to transport chilled air or liquids to and from the space to be cooled. The performance of large, central chilling units themselves (such as the one shown in figure XI 1-2) is better than window units, however. The larger units typically employ more efficient motors and more sophisticated designs; many units are able to achieve better performance at part loads by adjusting the flow of refrigerant (Many of these improvements could, of course, be incorporated in a smaller unit at some increase in the initial cost.) The advantages of larger systems are offset, however, by losses incurred in other parts of of the system.

A large number of designs are employed, and overall performance varies greatly from one installation to another. Some systems may require significant amounts of pumping energy to either move chilled liquids or air to different parts of a building or to operate a cooling tower which may be located on the roof

The performance of electric-cooling and heat-pump systems also varies as a function of the temperature and humidity of both the inside and outside air. This is due both to the fact that the theoretical capacity of a unit varies as a function of these parameters, and because most units must either be fully on or fully off. The load control achieved by "cycling" the system from full capacity to zero output requires heating or cooling large parts of the system before useful space conditioning can be performed. Using energy to heat or cool the units decreases the system's efficiency. The dependence of a typical residential heat-pump unit COP on the outdoor temperature is shown in figure XI 1-4. The fact that the heat pump's capacity to produce heat decreases as the outside temperature decreases results in a highly temperature-dependent heating mode, A system large enough to provide 100 percent of the heating load at the lowest anticipated temperature would be prohibitively expensive in most locations, and a most common compromise is to assist the heat pump with electric-resistance heat whenever its capacity falls below the heating demand. The average COP of a heat-pump system during the winter season is called the seasonal performance factor (SPF). This parameter is shown in figure XI I-5 as a function of local climate. As expected, the average COP of heat pumps is lower in northern parts of the count ry.

The performance of water-to-air heat-pump systems can be significantly higher than air-to-air systems if heated water is available. When 600 F water is available, most commercial units have COPS in the range of 2.5 to 3.5,[6] but units with COPS as low as 2.0 and as high as 3.7 are on the market.

Potential for Improving Performance

Research which could significantly improve the performance of these devices is currently underway in the laboratories of a number of heat-pump and air-conditioner manufacturers. Figure XI I-6 summarizes a re-

[6] *Directory of Certified Unitary Air-Conditioners, Unitary Heat Pumps, Sound-Rated Outdoor Unitary Equipment, Central System Humidifiers,* Air-Conditioning and Refrigeration Institute, 1976

Figure XII-4.– Performance of the Carrier Split-System Heat Pump

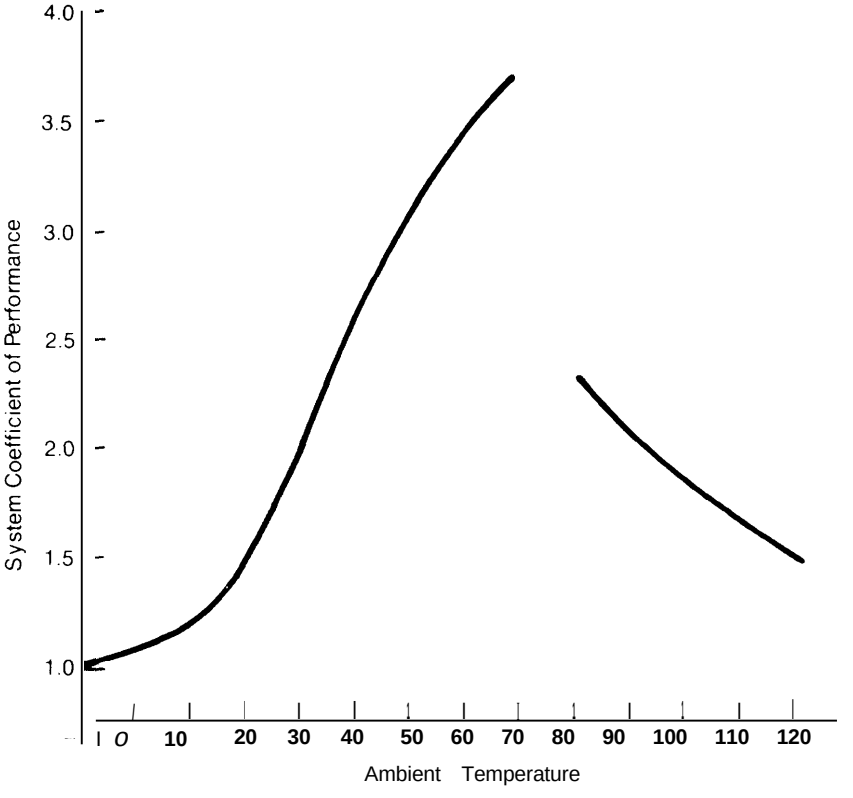

Model 38CQ020 ARI ratings:	*Heating mode* **nominal capacity 21,000 Btu/hour. COP at high temperature is 2.9, COP** at low temperature is 1.7.
	Cooling mode nominal capacity is 19,000 Btu/hour. COP is 2.1.
Assumptions used in computing system performance:	Heating mode entering indoor air is 70- F (db) heating demand in**cludes energy used for defrost balance point at 30' F.**
	Cooling mode entering indoor air is 80 F (db) and 67 F (wb). Fan power is 0.2 kW.

Energy use includes: compressor motor demands; resistance heat; the demands of indoor and outdoor fans; and the energy used in defrost cycles. The air-flow was assumed to be 700 cfm. Assumptions made about decrease in efficiency due to part load conditions were not explained in the literature.

SOURCE Carrier Spilt-System Heat Pump Outdoor Sectlons Carrier Corporation 1976, Form 38CQ-1P

Figure XII-5.– The Seasonal Performance of Heat-Pump Units as a Function of Local Climate

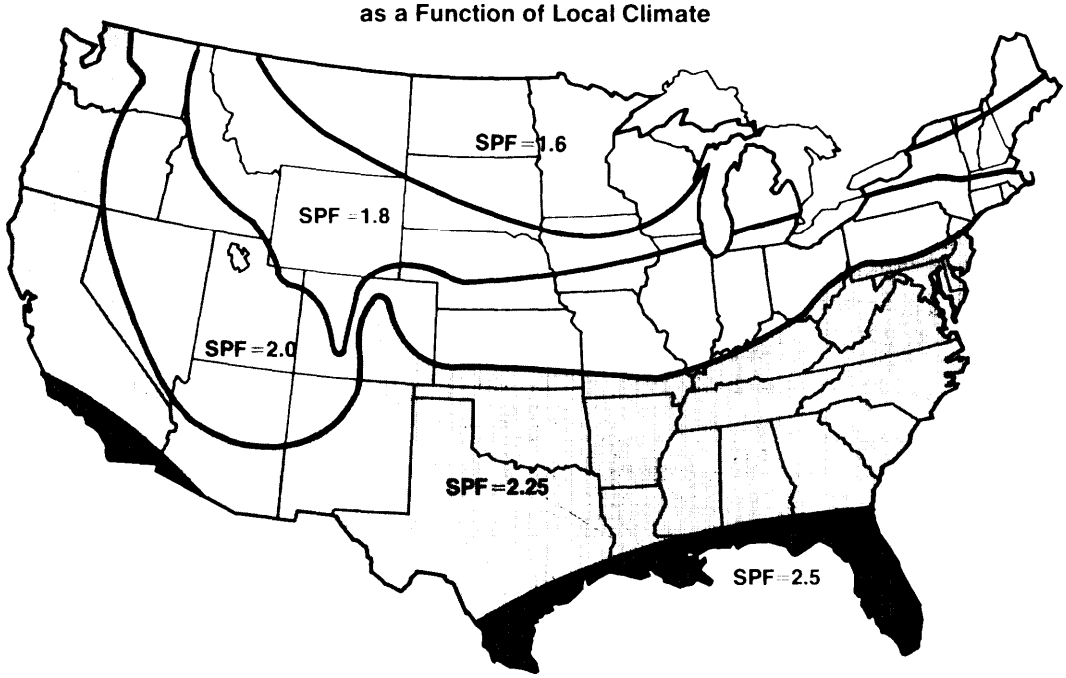

SOURCE *What is* a S/rig/e *Packaged Heat Pump and How Can it* Save *You Money*?, Carrier Corporation, Catalog No 650.069

Figure XII-6.— Estimated Cost of Increasing the Performance of Air-Conditioners From the Industry Average COP of 2.0 to the Performance Levels Indicated (estimates assume production rates equivalent to current production rates)

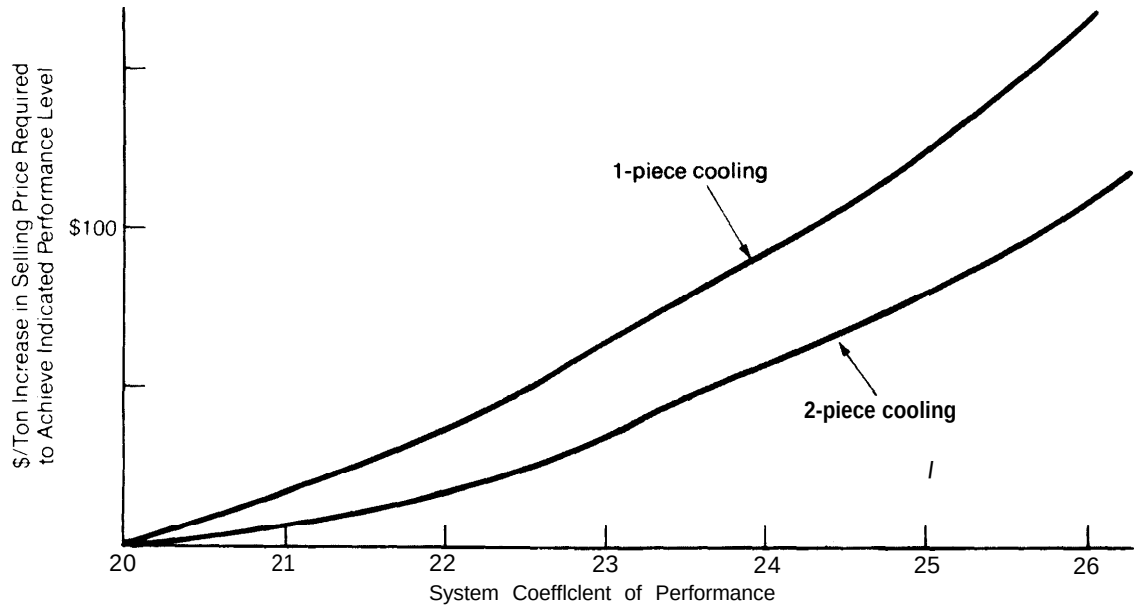

SOURCE George D Hudelson(VicePresiden-Engineering **Carrier** Corp)presentation to the Solar Energy Resources Conservation and Development Commission of Call forma Aug 10 1976 Docket No 75 CON 3

cent series of estimates of the increase in air-conditioning COP achievable without changing the basic design of the air-conditioning system and using a compressor unit which is currently available, and the cost of producing these new designs. Equipment incorporating these new designs could be made in the next few years. The requirements which will be imposed on air-conditioners and heat pumps sold in the State of California during the next 5 years are shown in table Xl 1-2.

Looking further into the future, a number of systems have been proposed which could increase the COP of air-conditioning systems and heat pumps by as much as so percent. A series of designs being considered by the General Electric Corporation is indicated in figure Xl 1-7. Researchers at G.E. believe that it would be possible to achieve an approximate 50-percent increase in the average COP of both heating and cooling for an increase in the initial cost of the unit of about *20* to 30 percent [7] It should be noted that performance can be improved by increasing low-temperature performance, high-temperature performance, or both, The speed with which these new units appear on the market will depend strongly on the company's perception of whether the public is willing to invest in equipment which can reduce their annual operating expenses over the long term. These attitudes, of course, may be influenced by legislative initiatives.

DIRECT FOSSIL-FIRED HEATING AND AIR-CONDITIONING EQUIPMENT

HEATING EQUIPMENT

The majority of residential and commercial buildings in the United States are heated with direct-fired oil and gas furnaces and boilers. There is considerable controversy about the typical operating efficiencies of these systems. One reason is that remarkably little is known about the performance capabilities of these systems in actual operating environments, and the literature in the area is filled with inconsistent information. Some indication of the difficulty can be seen by examining figure Xl 1-8, which indicates the performance estimates made by a variety of different organizations. Performance undoubtedly varies with the age of the unit, its installation, its position in the building, and a variety of other variables which are difficult to hold constant. Another reason for the controversy is the inconsistency in the definition of efficiency. Until recently, the most common value quoted was the steady-state or full-load combustion efficiency, which is defined as the ratio of useful heat delivered to the furnace bonnet divided by the heating value of the fuel.[8] Typical values for direct-combustion furnaces are 70 to 75 percent; heat loss principally results from heated stack-gasses lost during combustion, This definition does not give a complete measure of the fuel required to heat a living space over the heating season. A more useful definition which accounts for this, and which is increasingly being used, is the seasonal performance factor or seasonal efficiency. This measure compares performances of various space-heating systems. It is defined as the ratio of the amount of useful heat delivered to the home to the heating content of the fuel the furnace used over the entire heating season. Typical gas furnaces have seasonal efficiencies in the range of 45 to 65 percent (figure Xl 1-8). Seasonal efficiency accounts for all factors affecting the heating system's performance in its actual operating environ-

[7] Conley, General Electr c Corp , private communication, 1977

[8] Hise and Holman, op cit

Figure XII-7.—Some Examples of Proposed Advanced Heat-Pump Cycles

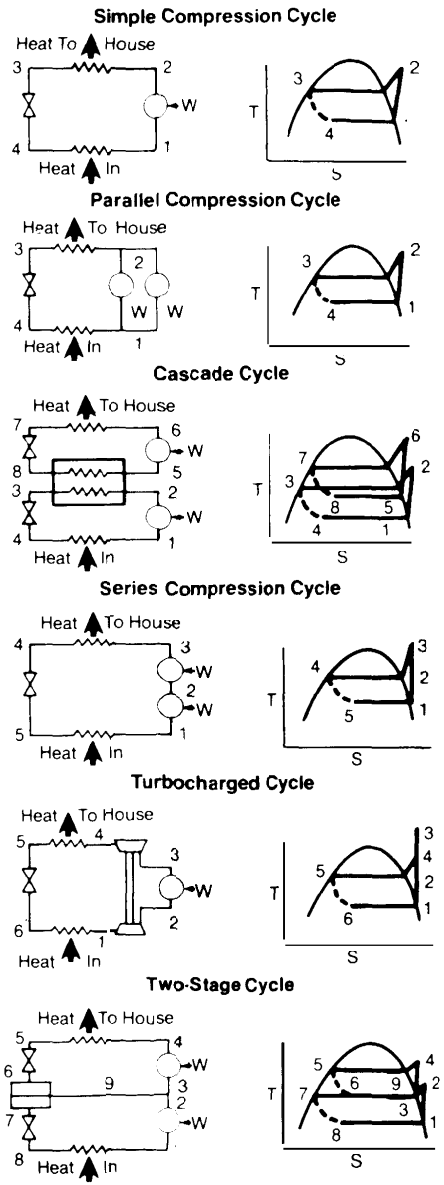

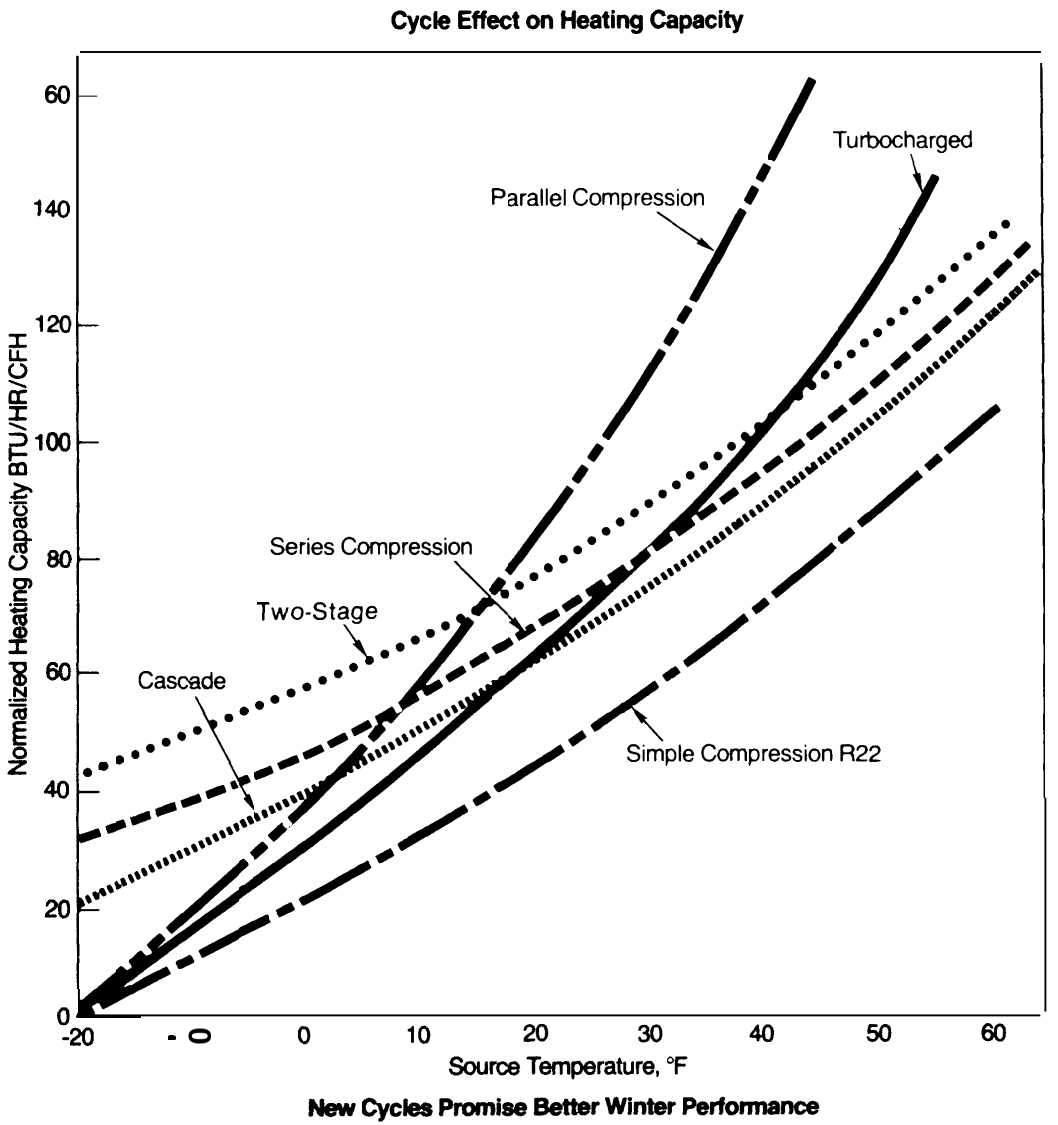

SOURCE: J. B. Comly, et al., "Heat Pumps—Limitations and Potential," General Electric Company, Technical Information Series, Report No. 75CRD185, September 1975.

Figure XII-8. – Residential Heating Systems

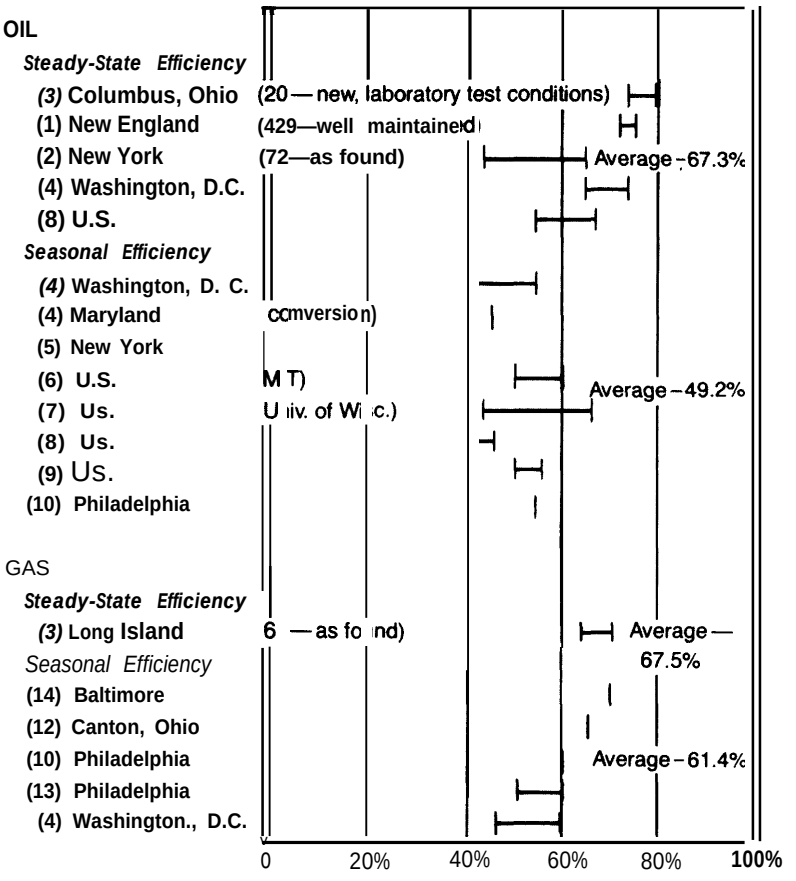

SOURCE: J. H. Leggoe, "Seasonal Efficiency of Home Fuel 011 Furnaces" Philadelphia Electric Company Paper, Aug. 26, 1976.

ment. In addition to stack gas losses (the largest contributor) these factors include loss of heated room air through the chimney while the furnace is off, cycling losses, pilot light (gas furnaces only), and heat losses through the air distribution ducts when in unheated spaces.[9] Cycling losses are a result of operation at part loads, which causes heat to be lost in raising the temperature of the furnace before useful heat can be delivered to the living space. A recent measurement of this part-load performance is indicated in figure XI 1-9. The seasonal efficiency of many installations is reduced by

Figure XII-9.— Efficiency of Gas Furnaces

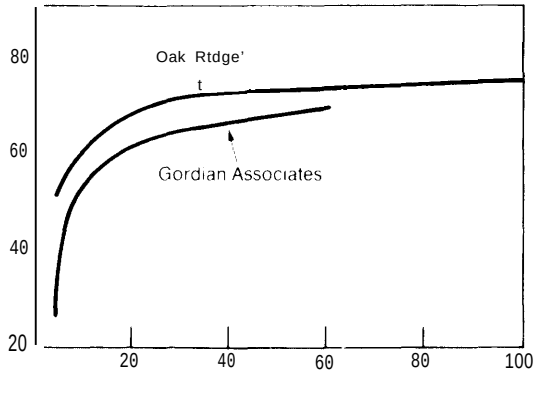

[9]G Samuels, et al , *MIUS Systems Analysis—Initial Comparisons of Modular-Sized Integrated Utility Systems and Convention/ Systems,* ORNL/H UD/MI US-6, June **1976, p 24.**

installing units which are larger than necessary, meaning that the systems are always operating at relatively inefficient part-load conditions.[10]

In addition to the fossil fuel required for the burner, gas and oil furnaces and boilers require electric energy to operate fans and pumps. A typical small gas furnace will require about 13 watts per 1,000 Btu/hour capacity,[11] A large central boiler and hot-water distribution system will also require about 13 watts per 1,000 Btu/hour of heating capacity to pump heated water. [2]

Potential for Improving Performance

The performance of gas furnaces can be increased by improving fan controls, using systems which preheat the air entering the furnace with the heat in the chimney, installing an electric ignition system to replace the pilot, and a variety of other rather straightforward changes in design, A recent study conducted by the Oak Ridge National Laboratory estimated that full-load combustion efficiencies of gas furnaces could be increased from 75 to 82 percent if these changes were implemented.[13] The combustion efficiency of oil-burning furnaces can also be improved by using improved burner heads and by ensuring that the burners are well maintained

An entirely different approach to the problem, using fossil fuels to operate a heat pump, has been under investigation for some time under the sponsorship of the American Gas Association. These designs burn fuel to operate a small onsite heat engine, which in turn drives the heat-pump compressor.

An advanced fossil fuel heating concept involves using the fuel to power a small heat **engine directly coupled to the compressor or a** heat pump (figure XI I-I O). The heat rejected by this engine can **be used to maintain a source of heated water, which can then provide the heat pump with a source of thermal energy at a temperature higher than the ambient air. Studies of this approach have been underway for some time in industrial laboratories and a number of projects in this area have been supported by the American Gas Association.**

Figure XII-10.—A **Fossil-Fired Heat-Pump System**

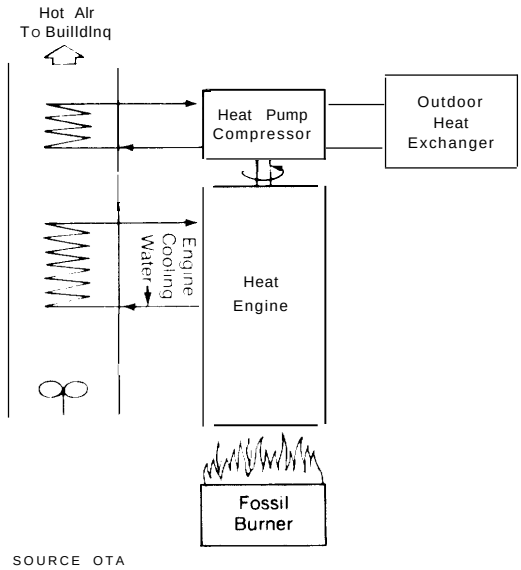

SOURCE OTA

A variety of different heat-engine designs have been considered. Designs employing Stirling and Ericsson cycles are being examined by RCA, the N.V. Philips Corporation, Sun Power, Inc., Energy Research and Generation, Inc., and by the University of Washington.[14 15 16] A number of workin, systems have been designed and tested.

"H iseandHol man, op cit

' 'Sears Fall-W Inter Catalog, 1976, p 955

"1bid

' 'Hise and Holman, op cit , p 3

'4W Beale (Sun Power, Inc.), private communication, June 1976

"G Benson (Energy Research and Generation, Inc), *ThermalOscillations,* presented at 8th I ECEC meeting, Aug *14, 1973*

''W R Martini, *Developments in Stirling Engines,* presented to the Annual Winter Meeting of the American Society of Mechanical E ngineers, New York, N.Y, Nov 26-30, 1972

A number of advanced, gas-fired, heat-pump systems are being examined by the industry, with the support of DOE and the American Gas Association:* **

- An absorption system capable of producing both heating and cooling is being developed by the Allied Chemical Corporation and the Phillips Engineering Co.
- A concept which uses a subatmospheric gas turbine is being developed by the Garrett Air Research Corporation.
- A free-piston Stirling engine is being developed by the General Electric Corporation (the project received about $1 million from the American Gas Association and about $2 million from DOE in 1 977).
- Systems based on diesel engines and Rankine-cycle devices are also being examined.

The technology of the engines used to drive the compressors was discussed in greater detail in the previous chapter. An interesting feature of the heat-fired, heat-pump systems is that their performance does not decrease with temperature as fast as the performance of conventional heat pumps.

While working systems have been designed, commercial production is unlikely to begin for the next 5 to 10 years.

The performance of the engines being considered for use with fossil-fired heat pumps is discussed in greater detail in the section on *Solar Heat Engines* in this chapter.

Stirling and Ericsson cycle, free-piston devices may be able to achieve efficiencies in the order of 60 to 90 percent of ideal Carnot efficiency.[17] An engine operating between 1,4000 and 1000 F could therefore achieve a cycle efficiency of 40 to 63 percent. (ERG has reported a measured indicated efficiency which represents 90 percent of Carnot in a free-piston device operating i n roughly this temperature region.)[18] The Garrett Corporation has reportedly achieved a cycle efficiency of 38 percent, using a small regenerated gas turbine.

If it is assumed that seasonal performance factors for heat pumps can be in the range of 2.5 to 3.0, the overall system COP (or ratio of heat energy delivered to the living space to the heating value of the fuel consumed) of a heat pump combined with a heat engine which is 38 to 60 percent efficient can be in the range of 0.95 to 1.8, If waste heat from the engine is used, the effective COP can be as high as 2.2.

A 38- to 60-percent efficient engine combined with an air-conditioning cycle with a COP of 2.5 could achieve system COPS of 0.95 to 1.5. These coefficients cannot be compared directly with COPS of electric heat pumps. In order to obtain comparable "system efficiency" for an electric system, the electric COPS must be reduced by the efficiency of converting primary fuels to electricity and transmitting this energy to a heat-pump system. The average generating efficiency in U.S. utilities is approximately 29 percent, the average transmission losses, approximately 9 percent. Under these assumptions, an electric heat pump with a heating COP of 3.0 and a cooling COP of 2.5 would have an effective "system" COP of 0.79 for heating and 0.66 for cooling. There are a number of questions about the system's performance as an integrated unit, its reliability, safety, noise, ease of maintenance, etc., which can only be resolved after much more experience has been obtained.

*"Advanced Gas-Fired Heat Pumps Seen Cutting Heating Bills in Half, " *Energy Users Report* #188, Mar 17, 1977, p 25

* * Paul F Swenson, "Competition Coming in Heat Pumps Gas-Fired May Be Best in Cold Climate, " *Energy* Research Reports, Vol 3, No 5, Mar 7, 1977, p 2

[17] Benson, 011 cit

[18] Ibid

"Patrick G Stone (Garrett Corporation), private communication, December 1976.

The devices do offer the prospect of a much more efficient approach to converting fossil fuels to useful space-conditioning,

A major question concerning any onsite system requiring **oil or gas is whether these fuels will continue to be available at acceptable prices, or whether they will be available at al 1. The heat-engine** devices just discussed **could, at least in principle, be used** in connection with a coal-burning, fluidized-bed boiler or other system, and thus might present a promising long-term alternative. One advantage of electric systems is that they may be able to use a greater variety of primary fuels than onsite systems.

ABSORPTION AIR= CONDITIONING

An "absorption-cycle" device for using direct thermal energy to operate air-conditioning systems has been available for some time. A standard cycle is illustrated in figure XI 1-11. The refrigeration cycle is very similar **to cycles used in other types of air-conditioning systems (vapor-compression). A chilled liquid (usually water instead of a refrigerant) is permitted to expand and cool air. This water is then recompressed and the absorbed heat rejected into the atmosphere (this cycle is on the right side of figure XI** 1-11). **The absorption cycle accomplishes this recompression by absorbing the low-pressure water vapor in a concentrated salt solution. This concentrated solution is continuously produced in a distilling unit which is driven by the heat from the fuel.**

Figure XII-11.—Basic Single-Effect Absorption Refrigeration Cycle

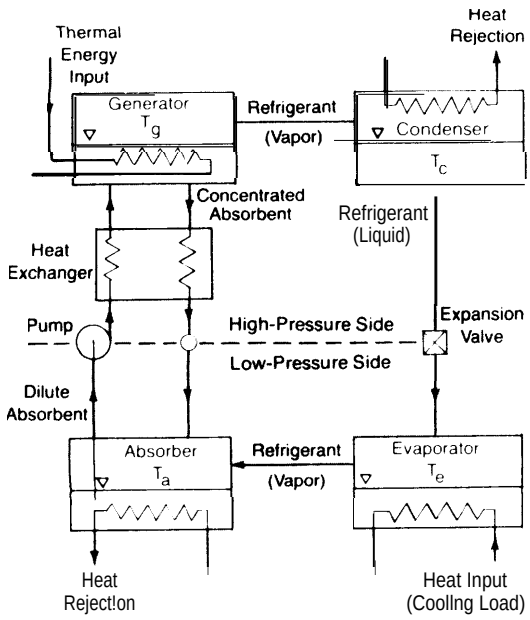

SOURCE: National Science Foundation.

The cooling performed by the absorption system can be separated into two distinct phases, and it would therefore be possible to store the concentrated salt solution for use when required by the cooling load. This concept is discussed further in chapter XI, Energy Storage. The major limitation to such a procedure at present is the cost of the working fluids,

An enormous amount of time and money **has been invested in the search for better working fluids. Lithium bromide/water solutions are used most frequently at present. Ammonia/water solutions are also used.**

Absorption units are inherently more expensive than electric systems 1) **because of the larger number of heat exchangers required, and 2)** because **the unit's cooling towers must be large enough to** reject **both heat from the combustion process and heat removed from the space which** was **cooled. (In** electric systems, the heat from **generation** is rejected at the electric generator site)

Double-effect units are also **more expensive than single-effect devices because even smaller numbers are produced An analysis**

of the components required indicates that double-effect machines could cost about 20 percent more than single-effect units in the same capacity range. The prices shown in figure XII-12 indicate that double-effect units operating at 3050 F instead of 3600 F would cost nearly twice as much because capacity would be decreased. Little work has been done to produce an optimum design for low-temperature systems, and DOE is currently funding several projects in this area.

The only small absorption units now on the market are the Arkla single-effect devices, manufactured in 3- and 25-ton sizes. There are currently no small double-effect machines on the market. In the early 1960's, the Iron Fireman Webster Division of the Electronic Specialties Corporation briefly marketed a small (1 5-ton) lithium bromide, double-effect, absorption machine. The design was taken from work supported in part by the American Gas Association, and was apparently capable of achieving very high efficiencies. It was removed from the market after only a few hundred were sold, apparently because the company felt that it could not overcome problems with the system's reliability at a reasonable cost. The unit was sufficiently different from single-effect units that gas company maintenance personnel had difficulty repairing the devices. The unit at least demonstrated the feasibility of small double-effect units.

System Performance

The coefficient of performance (COP) of contemporary absorption air-conditioners is

Figure XII-12.— Estimated Refrigeration Unit Cost Per Ton, 12,000 Btu/hr(contractor's cost)*

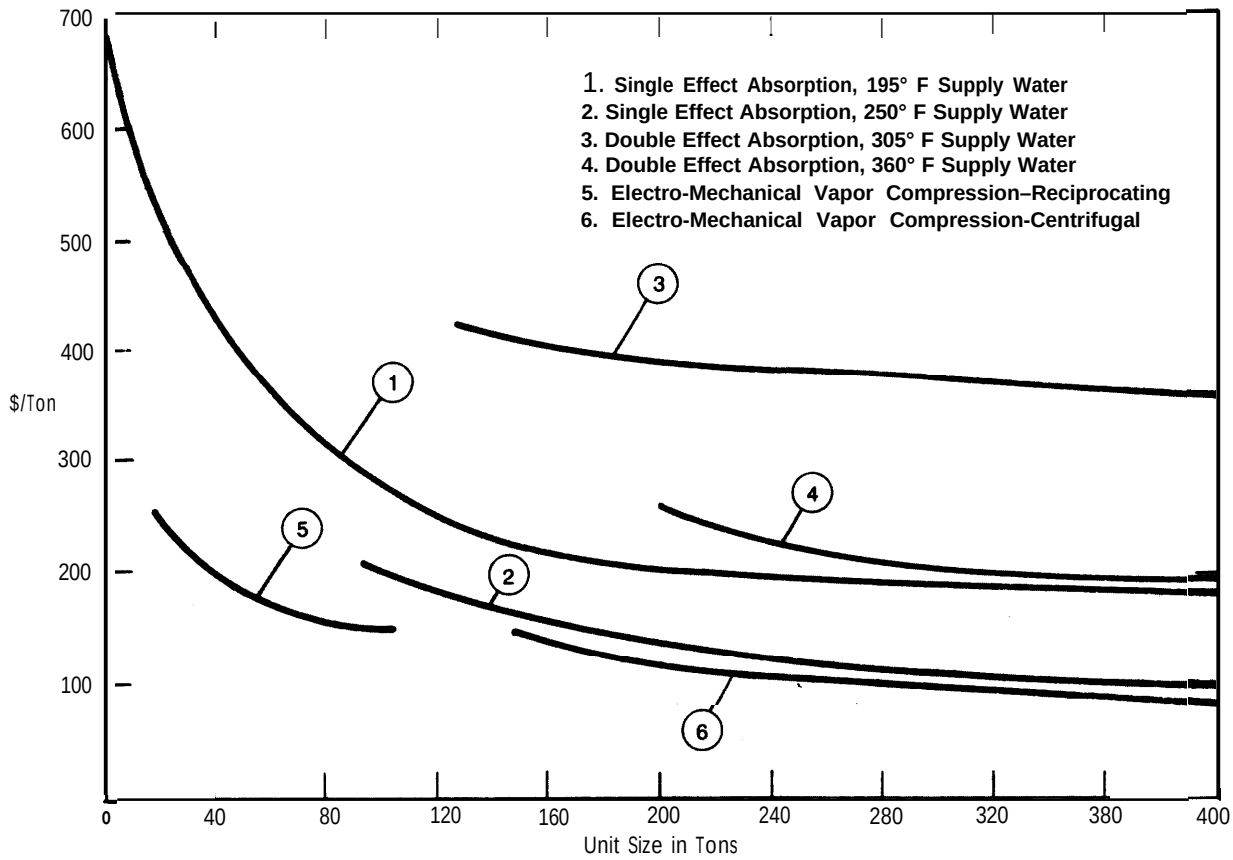

*Industry Average- 1976 Costs

NOTE Prices do not includeinstallation or subcontractor O&P costs

SOURCE prepared for OTA by H Corbyn Rooks April 1976

shown in figure XI 1-13. A typical single-effect device has a COP of 0.65 and double-effect units can have COPS of 1.1. These COPS must, however, be carefully qualified. (As in the case of fossil-fired heat pumps, these COPS should be compared with the "system" COPs of electric system s.)

The COPS shown in figure XI 1-13 include neither the electric energy required to operate pumps which move chilled water to the building loads and cooling water to and from the cooling tower, nor the electricity required to operate the fan in the cooling tower. These ancillary units require about 0.14 kW per ton of cooling in a typical installation. [20]

[20] Samuels, et al , op cit , p 20

The COPS also do not include the inefficiency of the boiler which must be used when the absorption units are used with fossil fuels. Typical boilers used in such applications lose about 20 to 22 percent of the heating value of the fuel burned in hot gasses escaping up the chimney. The COPS shown in the figure would apply to units operated from solar-heated fluids or by steam generated by a waste-heat boiler connected to a direct or other heat engine. They must be reduced by 20 to 22 percent when used to represent the performance of direct-fired devices.

It is reasonable to expect that improvements in current designs could lead to significant improvements in performance. A new series of absorption units, soon to be marketed by Arkla, will probably achieve a COP greater than 0.7 for a single-effect de-

Figure XII-13.—Coefficient of Performance Versus Supply Water Temperature

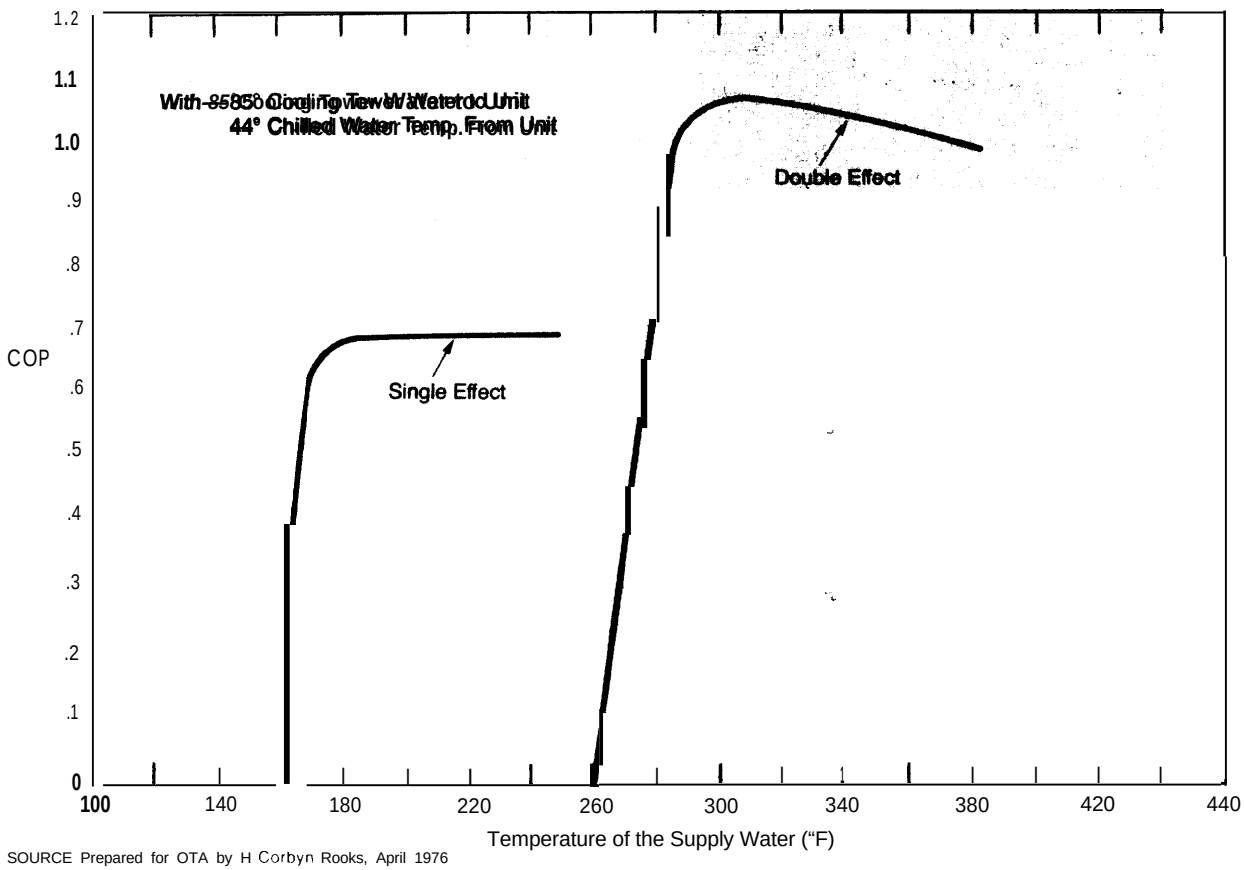

SOURCE Prepared for OTA by H Corbyn Rooks, April 1976

vice with no substantial increase in price. An experimental machine, which was a modified version of the single-effect Arkla device, has been tested with a COP greater than 0.8. [21]

The Iron-Firemen double-effect device discussed previously was able to achieve a COP of 1.2 (not including boiler losses and electric energy requirements) .22 Some engineers believe that it would be possible to construct double-effect absorption devices with COPS in the range of 1.35.23

Absorption units have good performance at partial loads because their effective capacity can be varied by simply changing the rate at which the salt solutions are pumped through the systems. This type of control works until the load falls to about 35 percent of the peak load, at which point substantial inefficiencies are experienced.

CONVENTIONAL GAS AND ELECTRIC WATER HEATERS

Residential hot water heaters are very inefficient. [2'] A gas water heater has a COP of about 0.50, and an electric water heater a COP of about 0.75.[25] 2.27 Better insulation and other improvements could increase the COPS of future electric units to 0.85 and the COPS of gas units to 0.80.

The efficiency of water heaters varies somewhat as a function of loads, but for simplicity it is assumed that water heaters have a constant "average" efficiency.

OPERATING COSTS

The costs of operating conventional heating and cooling equipment (exclusive of fuel costs) are not well documented, and no extensive study has been conducted on the subject. The estimates used in later analyses are shown in tables Xl I-3 and Xl 1-4. The costs used in this study were taken from the costs of purchasing a service and maintenance contract for equipment installed in the Washington, D. C., area. The actual costs will vary as a function of geographic location, quality of the equipment, location of the equipment in the building, design of the systems, etc. The costs must be considered conservative since the sellers of maintenance contracts must increase the actual maintenance costs by a margin sufficient to cover overhead and profit requirements.

Table XII-3. — Average Cost of Maintenance Contracts for Residential Heating and Cooling Equipment

	Annual cost
Gas furnace and eleotric air-conditioning	$60
Air-to-air heat pump	$50
Baseboard electric heat and window air-oonditioners	$30

SOURCE Gordian Associates, Inc Evaluation of the Air-to-Air Heat Pump for Residential Space-Conditioning. April 1976

[21] Joseph Murray, Chief Engineer of Applied Systems, Airtemp Corporation, private communication, Sept 23,1976

[22] Joseph Murray, private communication, 1977

[23] G.C Vliet, et al , A Thermodynamic *Approach to the Developments of a More Efficient Absorption Air-Conditioning System,* University of Texas at Austin – Center for Energy Studies

[24] Gillman, op cit

[25] APS, *Efficient Use of Energy,* p 83.

"J J. Mutch, Residential *Water Heating, Fuel Conservation Economics and Public Policy,* pp. 8 and 55

[27] Arthur D Little Co., Study of Energy-Savings Options for Refrigerators *and Water Heaters,* draft, pp S-12,1 3,14

Table XII-4. —Cost of Maintaining Commercial Heating and Cooling Equipment* (Parts and Labor)

	Dollars per year	Dollars per year per 10^6 Btu/hr. capacity
Low Rise		
Heating (10^6 Btu/hour)		
Gas	**$1,000**	**$1,000**
Oil	**1,250**	**1,250**
Electric	**1,000**	**1,000**
Cooing (50 tons)		
Gas	**3,8OO-4,5OO**	6,300-7,500
Electric	**3,000-3,6OO**	5,000-6,000
High Rise		
Heating (2 units@ 2x10^6 Btu/hour)		
Gas	2,000	**500**
oil	2,500	625
Electric	2,000	**500**
Cooling(200tons)		
Gas	5,000-6,000	2,000-2,500
Electric	**4,000-5,000**	**1,700-2,000**
Shopping Center		
Heating (2 units@ 8x10^6 Btu/hour)		
Gas	**2,500**	**150**
Oil	**3,000**	**190**
Electric	**2,500**	**150**
Cooling(2000tons)		
Gas	**19,000**	**800**
Electric	**15,000**	**600**

'Actual costs will vary greatly as a function of equipment quality, installation, building features, etc Costs based on "very rough' estimates of Robert Noyes of R E Donovan Co, Inc a service company in the Wasthington DC area Sept 23 1976

ADAPTATION OF CONVENTIONAL EQUIPMENT TO SOLAR POWER

Conventional heating and cooling equipment can be integrated with solar energy **in two basic ways: 1) electricity or mechanical energy generated by solar energy devices can be used to supplement electricity purchased from a utility, and 2) direct use of thermal energy generated by solar devices can provide a source of thermal energy for liquid and air-heat pumps, for absorption air-conditioning, forced-air heating, and to heat domestic hot water.**

The direct **use of solar-heated fluids for space heating or for the heating of hot water**

requires no sophisticated equipment, and the problems of designing these systems are discussed elsewhere.

SOLAR HEAT ENGINES

Direct use of solar-heated fluids can operate heat engines such as Rankine cycle turbines or Stirling engine devices which are coupled mechanically to heat pumps and air-conditioners. The direct-drive systems have a substantial theoretical advantage over systems operating from solar-generated electricity in that the losses associated with a motor and generator can be avoided. This can be a substantial gain, since typical efficiencies of small motors and generators are in the range of 80 to 90 percent and combined losses can amount to 30 percent. Total energy systems, which use the solar-powered engine to drive both a generator and a heat pump, could be driven directly from utility electricity when solar energy is not available by using the electric generator as a motor to drive the compressor. Direct-drive systems have a potential disadvantage if they cannot be designed as a single-sealed unit, since seals on rotating shafts could reduce overall system reliability. It may be possible to develop completely sealed engine-compressor units, but this will require a lengthy development program,

All of the heat engine alternatives are discussed in detail in the chapter discussing the conversion of solar energy into electricity. The operating characteristics of conventional heat pumps and air-conditioners integrated into solar energy designs using direct-drive connections will need adjustment to eliminate the inefficiency of the motors used in conventional systems. For the purposes of the calculations which follow, it is assumed that the motors used on conventional systems are 80 percent efficient. Systems connected electrically are assumed to be identical to conventional equipment, and conventional performance characteristics are assumed.

SOLAR ABSORPTION EQUIPMENT

Absorption cooling equipment can be easily converted for use with solar-heated fluids, and the modifications being suggested for high-performance solar applications should not require major design changes. As a result, absorption equipment will probably represent the majority of units used in solar air-conditioning systems in the near future. The water sent to the absorption generator can be heated either from a conventional boiler or from a solar collector. The coefficients of performance used for solar absorption equipment will be the same as those used for the steam-driven absorption equipment, since no boiler losses are involved.

The Adsorption Cycle System

The adsorption cycle was originally developed by Carl Munters of Stockholm, and is often known as the Munters system. The system is basically a desiccant system, drying the air with various kinds of salt crystals, silica gels, or zeolite. Heat and moisture are typically exchanged between an exhaust airstream and a supply airstream using a heat exchange wheel and a drying wheel as shown in figure Xl 1-14. The air is taken from the room and passed over the drying wheel which contains the desiccant. In passing through this wheel, the air is dried and heated to about 180°F. It then passes through the heat exchange wheel, where it cools to near room temperature. The air is finally passed through a humidifier, where it picks up moisture and cools to 550 to 600 F. The exhaust airstream takes ambient air and humidifies and cools it slightly to keep the heat exchange wheel as cool as possible. After passing through the heat exchange wheel, the air is still not hot enough to drive the moisture out of the drying wheel, so additional heat from a solar or gas source is added. This hot air then passes through the drying wheel, where it evaporates moisture from the desiccant, and the moist, heated air is exhausted to the atmosphere,

Its advantage is that it takes no refrigeration unit, but the wheels are large and require power to drive. After years of development, problems still exist with desiccant systems, including the desiccant, the seals between the supply and discharge airstream on the rotating wheels, and the wet pads. Variations of this adsorbent system are being properly supported by DOE. It has advantages, but still requires development prior to demonstration.

Figure XII-14.—An Adsorption Chiller

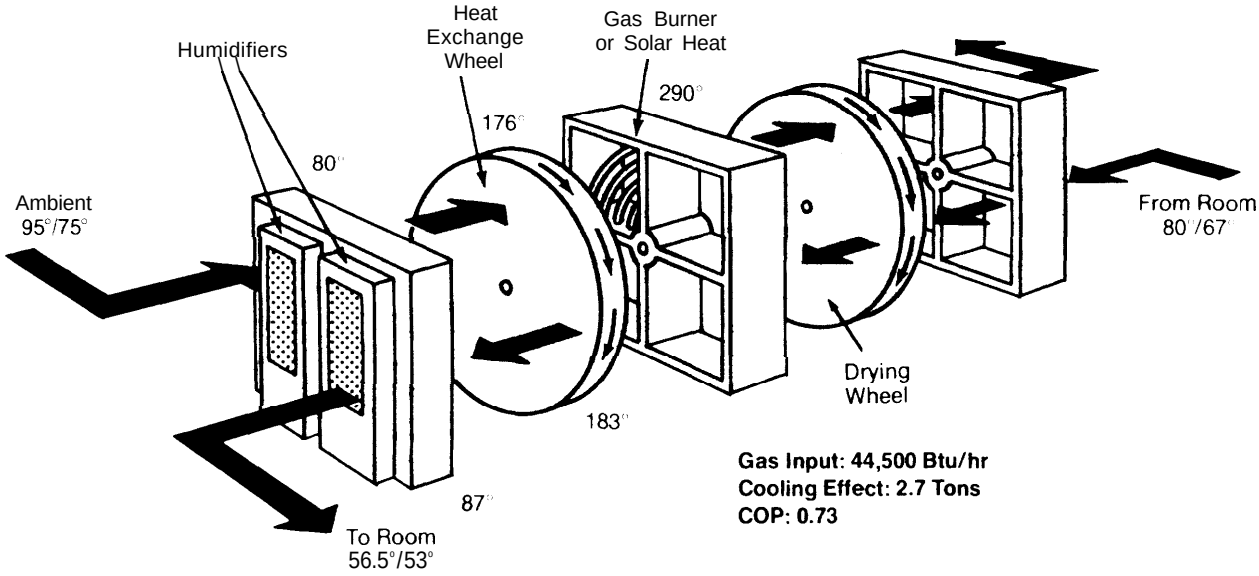

SOURCE Based on a drawing by W F Rush, statement relative to H R 10952 (Institute of Gas Technology, Illinois Institute of Technology, Chicago, Ill) Nov 14, 1973

U. S. GOVERNMENT PRINTING OFFICE : 1978 O - 28-842