Assessment of Community Planning for Mass Transit: Volume 3—Boston Case Study

February 1976

NTIS order #PB-252681

Volume 3: Boston Case Study

An Assessment of Community Planning for Mass Transit



UNITED STATES CONGRESS
Office of Technology Assessment

March 1976

OTA-T-18

OFFICE OF TECHNOLOGY ASSESSMENT

DIRECTOR'S OFFICE

Emilio Q. Daddario, Director

Daniel V. De Simone, Dcputy *Director*

URBAN MASS TRANSIT ADVISORY PANEL

George Krambles, Chairman, Chicago Transit Authority

Walter J. Bierwagen
Amalgamated Transit Union

Robert A. Burco
Oregon DOT

Jeanne J. Fox
Joint Center for Political Studies

Lawrence A. Goldmuntz
Economics and Science Planning

Dorn McGrath
George Washington University

Bernard M. Oliver
Hewlett-Packard Corporation

Simon Reich
Gibbs and Hill

Thomas C. Sutherland, Jr.
Princeton University

Frederick P. Salvucci
Massachusetts DOT

Stewart F. Taylor
Sanders and Thomas, Inc.

OTA TRANSPORTATION PROGRAM STAFF

Gretchen S. Kolsrud, *Program Manager*

Mary E. Ames
V. Rodger Digilio
Thomas E. Hirsch, 111
Larry L. Jenney
Bev Johnson
Teri Miles

CONTRACTORS

Skidmore, Owings and Merrill

System Design Concepts, Inc.

PREFACE

This report on urban transportation planning in the Boston, Massachusetts metropolitan area is one of nine case studies undertaken by the Office of Technology Assessment to provide an information base for an overall assessment of community planning for mass transit.

The findings of the overall study are reported in the summary document, *An Assessment of Community* Planning for Mass Transit, which forms the first volume of this series. The assessment was performed at the request of the Committee on Appropriations of the U.S. Senate, on behalf of its Transportation Subcommittee.

The study was directed by the Office of Technology Assessment's Transportation Program Staff with guidance and review provided by the OTA Urban Mass Transit Advisory Panel. The firms of Skidmore, Owings and Merrill and System Design Concepts, Inc., were contractors for the study. This assessment is a joint effort, identifying different possible points of view but not necessarily reflecting the opinion of any individual.

INTRODUCTION

This report assesses how one of nine major United States metropolitan areas made its decisions about the development or modernization of rail transit.

The assessment of the nine cities attempts to identify the factors that help communities, facing critical technological choices, make wise decisions that are consistent with local and national goals for transit. The study investigates the following issues:

- Are there major barriers to communication and cooperation among governmental agencies involved in transit planning and operating ? Do these barriers interfere with making sound decisions ?
- Do transit decisions reflect the combined interests of all major public groups, including citizen organizations, trade unions, the business community, and others?
- Does the planning process provide enough information about the advantages and disadvantages of alternative courses of action to provide a solid basis for making decisions ?
- Does the availability or lack of financing, or the conditions under which financing has been provided, unnecessarily limit the range of options that are considered?

The ultimate purpose of the work has been to cast light on those prospective changes in national transit policy and administrative programs which might improve, in different ways and to different extents, the way communities plan mass transit systems. The nine cities were selected to represent the full range of issues that arise at different stages in the overall process of planning and developing a transit system.

San Francisco, for example, has the first regional rail system built in decades, while Denver is planning an automated system, and voters in Seattle have twice said “no” to rail transit funding proposals.

The assessment of transit planning in each of the nine metropolitan areas has been an inquiry into an evolving social process. Consequently, the study results more closely resemble historical analysis than classical technology assessment.

This study employs a set of evaluation guidelines to orient the investigation in the nine metropolitan areas and to provide the basis for comparative judgments about them. The guidelines were derived from issues identified during preliminary visits to the metropolitan areas, a review of Federal requirements for transit planning, and an investigation via the literature into the state-of-the-art in the field.

The evaluation guidelines cover major topics which were investigated during the case assessment process. They deal with the character of the institutional arrangements and the conduct of the technical planning process.

GUIDELINES FOR ASSESSMENT: INSTITUTIONAL CONTEXT

Some of the most significant influences on transit planning are exerted by the organizations responsible for conducting the planning and making the decisions. Three guidelines were used to evaluate the institutional arrangements in the nine metropolitan areas:

- Agencies responsible for various aspects of transit decisionmaking should cooperate effectively in a clearly designated “forum”.
- The participants in this forum should have properly designated decisionmaking authority, and the public should have formal channels for holding decisionmakers accountable for their actions.
- Citizens should participate in the transit planning process from its beginning and should have open lines of communication with decision makers.

GUIDELINES FOR ASSESSMENT: TECHNICAL PLANNING PROCESS

The technical planning process provides the information that public officials and their constituents draw upon in making plans and decisions. Four guidelines were used to assess the technical planning process in the nine metropolitan areas:

- Broad, explicit goals and objectives should guide technical planning and decision-making.
- A range of realistic alternative solutions should be developed.
- The evaluation of these alternatives should give balanced consideration to a full range of goals and objectives.
- A practical and flexible plan for financing and implementation should be developed.

During visits to each of the nine metropolitan areas, the study team interviewed the principal representative of the transportation planning institution and other main participants in the local planning process. The visits were supplemented by interviews with UMTA officials in Washington. Pertinent documents—official plans, reports, studies, and other material—were reviewed in each case.

The information thus collected was used in compiling a history of the transit planning process in each case area, organized around key decisions such as the decision to study transit, the selection of a particular transit system, and public ratification of the decision to pay for and build the system. The main political, institutional, financial and technical characteristics affecting the conduct of the planning process were then assessed in light of the evaluation guidelines.

The same set of guidelines used in assessing each case metropolitan area was employed in making a generalized evaluation of the metropolitan experience. The results of the generalized evaluation are summarized in the report, ***An Assesstnenf of*** *Community Planning for Mass Transit: Summary Report,* issued by the Office of Technology Assessment in February 1976.

CONTENTS

SUMMARY AND HIGHLIGHTS 1

METROPOLITAN SETTING *3*
General Characteristics 3
Existing Passenger Transportation System *6*
Transportation Planning Institutions *8*

CRITICAL HISTORY OF TRANSIT PLANNING AND DECISIONMAKING 11
Decision to Reevaluate Highway Plans: The Moratorium 11
Decision to Recommend Transit Improvements: The BTPR 14
Steps Toward Implementing Transit Improvements **18**

CHRONOLOGY OF THE TRANSIT PLANNING PROCESS . . . *21*

ASSESSMENT OF THE PLANNING AND DECISIONMAKING PROCESS *23*
Institutional Context *23*
Technical Planning Process *26*

SUMMARY CASE ASSESSMENT *33*

67-445 O - 76 - 2

Summary and Highlights



New light rail vehicles operate test runs on the Massachusetts Bay Transportation Authority's Green Line

. Boston's rapid transit system is one of the oldest and most extensive in the country. Because of its age and pattern of piecemeal growth through evolutionary stages, the Boston transit system incorporates a melange of technologies: rapid transit, streetcar trolley, trackless trolley, commuter rail, and bus. In addition, tunnels and vehicles in the four subway lines have different dimensions and operating characteristics. These physical features constrain the operating efficiency of the total system.

- Boston's transit work force is among the highest paid in the country, with a minimum annual salary for unionized workers totaling $14,000. The transit unions, which have strong supporters in the State legislature, have been successful in negotiating favorable contract agreements.

- Unlike recent highway and airport controversies—both of which have aroused vigorous and polarized debate throughout the Boston area—proposals for expansion and improvement of the transit and commuter rail system have not engendered significant organized opposition on basic ideological grounds. The consensus in favor of transit has been both an asset and a liability. On the one hand, opposition to increased capital investment in transit has been minimal. On the other hand, proposed transit projects and new approaches to the delivery of transit services have not received the same degree of critical analysis and evaluation as have other modes.

. The Boston Transportation Planning Review (BTPR) changed the Boston area transportation planning process by

creating an open and participatory framework for decisionmaking that has been institutionalized by creation of the Joint Regional Transportation Committee (JRTC), a policy advisory body, and the Central Transportation Planning Staff (CTPS), the technical equivalent of the BPTR study team.

- The Massachusetts Bay Transportation Authority (MBTA), Boston's transit operating authority, was a reluctant participant in the BTPR process. MBTA resisted any fundamental reexamination or revision of its past plans and priorities.
- The BTPR staff of consultants was oriented by training and experience to highway planning, Its principal orientation, from a transportation planning viewpoint, was to resolve specific highway controversies that had arisen in subregional corridors, and to reach project-related decisions on those proposed highway facilities. While this orientation sharpened the focus of the BTPR effort, it also tended to work against the emergence of a regionwide transportation strategy and the development of new approaches to transit service.
- The BTPR rapid transit proposals are largely consistent with the pre-BTPR transit plans for suburban rapid transit extensions. Although BTPR did investigate (and in some cases resulted in the adoption of) other types of transit services or facilities (e.g., preservation and improvement of commuter rail service, special mobility services for low-income and elderly groups, circumferential transit service), these services and facilities appear to remain lower in priority than rapid transit extensions, with the exception of the commuter rail improvement program.

. Despite the apparent consensus in favor of an aggressive transit expansion program that was reached following the BTPR, no Federal approvals have been granted and no construction has been initiated on new transit projects during the post-BTPR period (since January 1973). State and Massachusetts Bay Transportation Authority officials have complained about changing and ambiguous environmental review requirements. In addition, in recent project hearings in the South Quincy area, considerable local opposition has been voiced to the proposed Red Line extension project. This opposition indicates that specific project-related decisions may raise troublesome problems despite the region's overall protransit consensus.

Metropolitan Settingl

GENERAL CHARACTERISTICS

Boston is the cultural and economic "hub" of New England. The Boston area's academic institutions and research-oriented industries support—and are supported by—a large group of well-trained specialists. This group provides a resource of technically skilled persons whose specialties are either directly relevant or readily adaptable to many of the complex issues raised by transportation planning.

At the same time the Boston area is comprised of numerous cities and towns having strong, long-established, and separate identities. Even within individual cities and towns, close-knit community and neighborhood districts—often with a strong ethnic character—provide a basis for organized public involvement in planning efforts. By their very nature, however, the existence of these strong social and political units tends to work against the development of regionally based constituencies and viewpoints.

Boston also is the capital of a small and highly politicized State. This factor tends to augment the "visibility" of controversial transportation planning issues in the State in general, and in Boston in particular.

Geographically, Boston (like all of New England) is distant from the Nation's economic markets and is relatively poor in terms of exploitable natural resources. Although Logan Airport handles a large segment of international air traffic, maritime commerce suffers from competition with more advantageously located east-coast ports such as New York and Baltimore.

The Boston metropolitan area is physically defined by the ocean and three concentric rings of development. The inner ring, with a radius of 5 to 5% miles from downtown Boston, comprises the dense urbanized core, and includes Boston, Brookline, Cambridge, Somerville, Medford, Everett, Chelsea, Revere, and Winthrop. The second ring, extending some 11 miles from Boston and roughly congruent with circumferential Route 128, includes a lower-density suburbanized belt of cities and towns, with nodal concentration around traditional town centers. The third ring, lying around Routes 128 and 1-495, is a predominantly open but suburbanizing portion of the Boston area.

Over the past 20 years, changes in type and location of employment in Boston have affected transportation needs. Employment has shifted dramatically from a manufacturing base to a predominance of jobs in service industries. Simultaneously, the past two decades produced a fairly slow but steady movement of jobs from the core area (the city and inner suburbs) to the suburban part of the region.

In absolute terms, the shift in employment has not greatly affected the distribution of work trips between the City of Boston and its suburban ring; between 1960 and 1970 trips originating and ending outside the city grew little more than 10 percent (see Figure 2). Nevertheless, the shift in employment has created the need for a transportation system that can serve relatively low-density employment concentrations because the new jobs tend to be widely dispersed; only about a third have been in clustered locations like industrial parks or commercial-office complexes.

The types of jobs that have tended to move to the suburbs employ minority workers; the city lost an estimated 80,000 minority jobs in manufacturing between 1950 and 1958, while the suburbs gained 12,000. Since minority workers tend to use public transit to get to work, these shifts indicate increased dependence upon bus or auto in areas with relatively low-density employment concentrations.

The pattern of population growth and dispersal reflects the change in location of employment centers. From 1960 to 1970 the population of the City of Boston fell 8.1 percent, and population density declined at a similar rate. Meanwhile, both population and density of the suburban ring grew by 11.3 percent (see Figure 3).

[1] See Figure 1, pages 12 and 13

WORK TRIP DISTRIBUTION

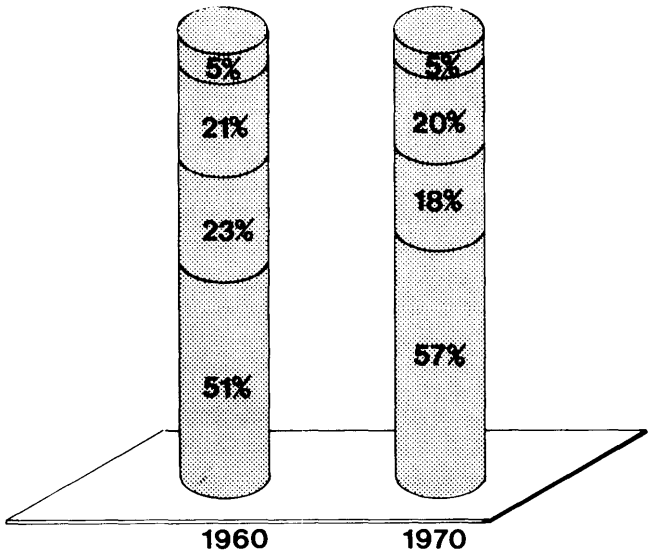

WORK TRIP MODE

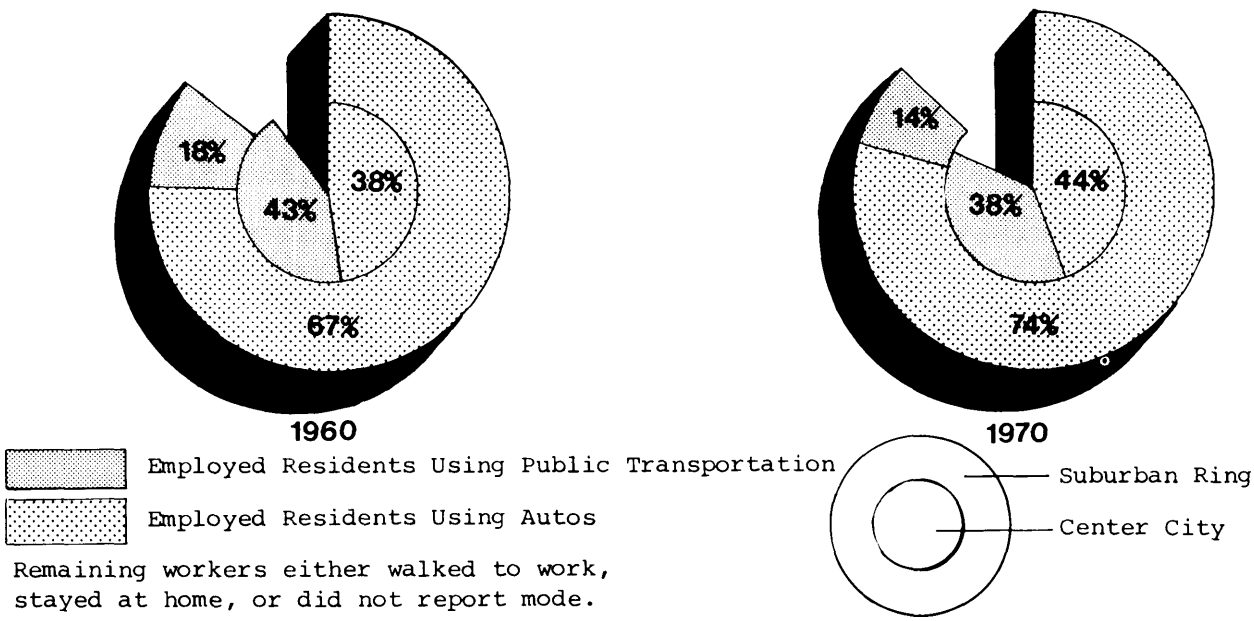

FIGURE 2: BOSTON SMSA TRAVEL CHARACTERISTICS

Source: Urban Transportation Fact Book, American Institute of Planners and the Motor Vehicle Manufacturers Association of the U.S., Inc., 1974.

A Standard Metropolitan Statistical Area (SMSA) includes a center city (or cities) , usually with a population of at least 50,000 plus adjacent counties or other political divisions that are economically and socially integrated with the central area.

LAND AREA (1970)'
(square miles)

Suburban Ring	941
Center City	46
Entire SMSA	987

POPULATION

	Suburban Ring	Center City
1960	1,898,284	697,197
1970	2,112,629	641,071

DENSITY
(population/square mile)

	Suburban Ring	Center City
1960	2,017	15,156
1970	2,245	13,936

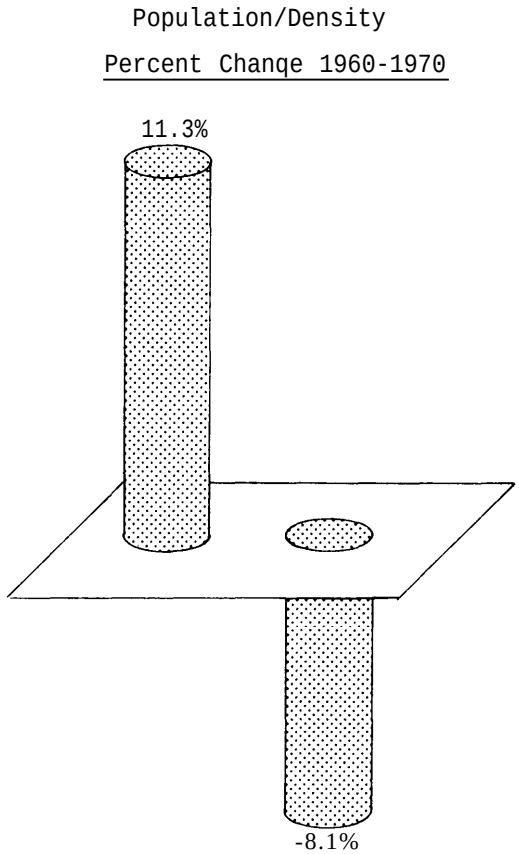

FIGURE 3: BOSTON METROPOLITAN AREA CHARACTERISTICS

I Does not include two new townships added to the SMSA since the 1970 Census.

Source: Urban Transportation Fact Book, American Institute of Planners and the Motor Vehicle Manufacturers Association of the U.S., Inc., 1974.

A Standard Metropolitan Statistical Area (SMSA) includes a center city (or cities), usually with a population of at least 50,000, plus adjacent counties or other political divisions that are economically and socially integrated with the central area.

Residents in the Boston central city as well as residents in the suburbs rely heavily on public transit for their commute to work. In 1970, 38 percent of all employed central city residents used public transit to commute to work, while 14 percent of all employed suburban ring residents used public transit for this purpose. In each case, only New York City had a higher percentage utilization of public transit. By contrast, 44 percent of employed central city residents and 74 percent of employed suburban ring residents commuted by auto. Again, only New York City residents ranked lower in percentage commutation by auto.

In spite of Boston's strong showing as a transit city, transit use is declining in Boston, as it is in most U.S. cities. The shift of jobs away from areas served by the current rapid transit and feeder bus systems parallels the drop in annual MBTA ridership. From the recent peak of approximately 185 million annual passengers in 1967 (versus 175 million in 1963), ridership dropped steadily to 146 million in 1973. After a modest gain in 1974, ridership again began to decline in early 1975 (see Figure 4).

EXISTING PASSENGER TRANSPORTATION SYSTEM

Highways in the Boston area include the Route 128 circumferential highway, one of the earliest "beltways" to be completed for a major American city, and Route 495, an outer-ring circumferential. A major portion of Route 128 has recently been designated as 1-95 in substitution for the previously proposed extension of Route 1-95 through the downtown Boston core. The 1-95 project was shelved following the Boston Transportation Planning Review (BTPR) study.

Radial expressway facilities from Route 128 into the downtown core include the Southeast Expressway, the Massachusetts Turnpike (1-90), and Route 1-93. Route 2 extends inward from Route 128 to the city of Cambridge, while the Northeast Expressway extends from downtown Boston to the city of Revere. The Central Artery serves major traffic flows within the downtown, connecting with the Southeast Expressway, the Massachusetts Turnpike, 1-93, and (via the Mystic River Bridge) the Northeast Expressway. Numerous arterials and parkway facilities also serve major vehicular traffic flows. In addition to the deletion of proposed Route 1-95, an extension of Route 2 and the Inner Belt (proposed Route 1-695) were deleted from the region's highway plan as a result of the BTPR study. Route 1-93 was subsequently signed to follow the Central Artery and the Southeast Expressway to a junction with Route 128 south of Boston.

At the present time no major highway construction projects are proposed within the Route 128 perimeter, although major upgrading, minor connector roads, parking terminals, and other related highway improvement projects slated for implementation within Route 128 carry an estimated price tag of $1.2 billion to $1.8 billion. z

Boston's extensive but aging transit system, operated by the Massachusetts Bay Transportation Authority, includes 37 route miles of rail rapid transit, 43 route miles of streetcar lines, 3,538 route miles of bus service, 8 route miles of trackless trolley, and 480.2 track miles of commuter rai] (operated through subsidy agreements with the Boston & Maine and the Penn-Central Railroads).

The rail rapid transit network includes four main lines—the Red, Orange, Green, and Blue Lines. Having developed in piecemeal fashion over the years, the Boston system is comprised of non-interchangeable vehicles. Not all tunnels in the subway system can receive all vehicles currently in operation. In addition, high- and low-level platforms are present on various lines. In essence, the subway system consists of four separate systems, with different rolling stock and servicing facilities. Added to this, electrical buses, regular buses, and the commuter rail system bring the total of separate transit systems to seven.

MBTA's transit operations have long experienced spiraling deficits. By 1960, when its annual operating deficit reached nearly $15 million, Boston's transit system was suffering dramatically greater losses than any other city studied. Today, its annual operating deficit is second only to New York's. A major reason for this situation is the fact that Boston's transit work force is among the highest paid in the country, with a minimum salary for unionized workers totaling $14,000. Other reasons include MBTA's outdated equipment and the fact that it generates much of its own power in inefficient, oil-burning power plants.

MBTA adopted a lo-year transit development program in 1974 that includes both small- and

2 Joint Regional Transportation Committee, Transportation *Plan for the Boston Region,* 1974-1983, July 1974.

VEHICLE MILES OPERATED
(millions of miles)

Peak Year = 1969 (48.5 million miles)
Low Year = 1965 (37.1 million miles)

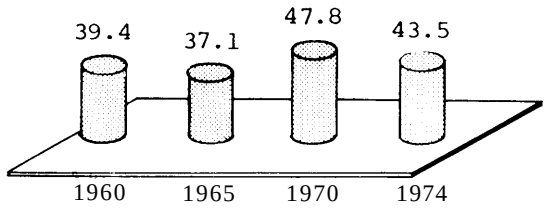

REVENUE PASSENGERS'
(millions of passengers)

Peak Year = 1968 (307.4 million passengers)
Low Year = 1971 (144.3 million passengers)

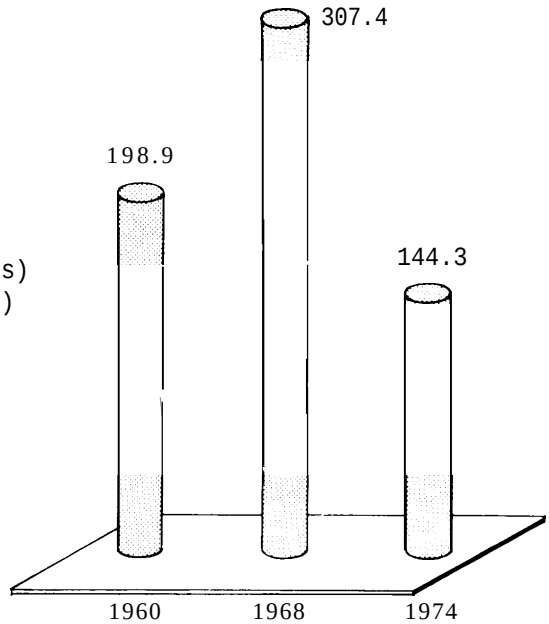

NET OPERATING REVENUE
(millions of dollars)

Peak Year = 1962 (-$10,332,457)
Low Year = 1974 (-$128,508,677)

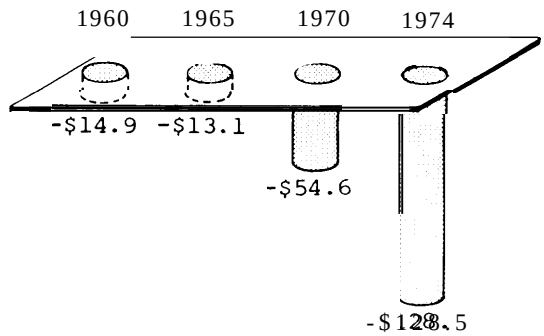

FIGURE 4: BOSTON TRANSIT OPERATIONS. 1960–1974

Source: American Public Transit Association records for operations of the Massachusetts Transit Authority and the Massachusetts Bay Transportation Authority.

IData on revenue passengers not available for 1961-1966, 1969-1970.

A Standard Metropolitan Statistical Area (SMSA) includes a center city (or cities), usually with a population of at least 50,000, plus adjacent counties or other political divisions that are economically and *socially* integrated with the central area.

67-445 O - 76 - 3

large-scale improvements to the existing system. Extensions proposed for the Orange, Blue, and Red Lines are currently under study. The program calls for improving commuter rail and trackless trolley service. It also recommends consideration of a circumferential transit system in the downtown area using an advanced technology. Finally, it proposes investigating the feasibility of a new cross-harbor tunnel exclusively for airport limousines, buses, emergency vehicles, and possibly carpools.

TRANSPORTATION PLANNING INSTITUTIONS

The Boston region's institutional structure for transportation planning is in the midst of transition. Policymaking functions are being moved away from older organizations that are tied to the State legislature to new agencies with a direct line of responsibility to the Governor.

Executive Office of Transportation and Construction (EOTC)

The Executive Office of Transportation and Construction, a State cabinet-level office, was created in 1971 as part of the reorganization of State government. The reorganization clarified lines of responsibility in the executive branch and has resulted in the consolidation of many commissions and State departments. Although not yet implemented in full, the reorganization of State transportation agencies should result in the streamlining of administration and a more consolidated approach to solving transportation problems.

TABLE I.—Federally Recognized Regional Agencies

Designation	Agency
A-95	Metropolitan Area Planning Council (MAPC)
MPO	Five agency compact chaired by the Secretary of the Executive Office of Transportation and Construction and including the Department of Public Works, the Metropolitan Planning Council, the Massachusetts Bay Transportation Authority, and the MBTA Advisory Board.

On January 1, 1975, the Executive Office of Transportation and Construction assumed responsibility for the preparation and annual revision of MBTA's transit development program. EOTC has assigned this task to the Central Transportation Planning Staff.

Central Transportation Planning Staff (CTPS)

The Central Transportation Planning Staff (CTPS) was organized to provide a technical transportation planning resource for the region. This interagency group is intended to provide for the more effective use of available resources by permitting a more comprehensive and coordinated approach to transportation planning. At the request of EOTC, CTPS prepares the region's annual transit development program.

Massachusetts Bay Transportation Authority (MBTA)

The Massachusetts Bay Transportation Authority was established by the State legislature in 1964. It replaced the Metropolitan Transit Authority, expanding participation in the transit district from 14 cities and towns to 78 (now 79). MBTA was mandated to operate the area's transit systems and to plan improvements. The cities and towns in the MBTA operating district are assessed according to a statutory formula for funds to offset operating deficits, However, in 1974 and 1975 the State legislature agreed to pay half the deficit out of general revenues. The State legislature must approve bonding authority before MBTA can launch new capital projects.

Until January 1975, MBTA policy was set by the board of directors, and the executive function was performed by a general manager. The general manager position has been effectively eliminated by the transfer of leadership to the chairman of the board of directors.

As noted, responsibility for preparing the region's annual transit development program was moved in January 1975 from MBTA to the State Executive Office of Transportation and Construction.

MBTA Advisory Board

The Advisory Board, consisting of appointed representatives of the 79 cities and towns in the MBTA district, does not play an active role in transit planning. Its principal function is to approve the annual operating budget of the authority. Since the operating budget depends in part on the nature

and extent of the overall transit system, the Advisory Board is also empowered by statute to approve MBTA's capital improvement program. It thereby has an important, although indirect, voice in the region's transit planning and capital improvement programing functions.

The same legislation that revised the MBTA board of directors and transferred planning responsibilities to EOTC also provided increased funds ($40,000 per year) for staff for the MBTA Advisory Board. The additional staff assistance should provide the Advisory Board with improved capabilities in carrying out its review functions.

Joint Regional Transportation Committee (JRTC)

In 1973, the Commonwealth of Massachusetts, through its Executive Office of Transportation and Construction (EOTC) and the Department of Public Works (DPW), joined with Boston's Metropolitan Area Planning Council (MAPC), the Massachusetts Bay Transportation Authority (MBTA), and MBTA's Advisory Board in a Memorandum of Agreement to establish the Joint Regional Transportation Committee (JRTC). Representatives from the five signatory agencies, delegates from eight other State agencies, representatives of a dozen cities and towns, and a number of citizens designated by the EOTC sit on the committee, which functions as the region's policy advisory board for transportation planning and programing.

Committee of Signatories

In March 1975 the same five agencies that created JRTC established a second agreement to service collectively as the region's Metropolitan Planning Organization and take charge of coordinating transportation planning in the Boston areas The EOTC Secretary is chairman of the group.

Metropolitan Area Planning Council (MAPC)

The Metropolitan Area Planning Council, a multi jurisdictional agency representing 101 cities and towns in the Boston area, was created by the State legislature in 1963. It functions as the A-95 project review agency. 4 MAPC is a signatory to the Memorandum of Understanding that established the MPO but its direct role in this committee is limited primarily to administrative functions.

Massachusetts Department of Public Works (DPW)

The Massachusetts Department of Public Works historically was the dominant force in transportation planning in the Boston area. This dominance ended with declaration of a moratorium on highway construction in February *1970.* Through the State government reorganization plan, much of DPW'S policymaking role was transferred to EOTC.

---

[3] The Urban Mass Transportation Administration and the Federal Highway Administration require Governors to designate a Metropolitan Planning Organization (M PO) in each area to carry out the "con tin uing, comprehensive transportation planning process carried out cooperatively ." (the "3-C" process) mandated by the Federal-Aid Highway Act of 1962 and the Urban Mass Transportation Assistance Act of 1974. According to joint UMTA-FHWA regulations published in September 1975, MPO's must prepare or endorse (1) a long-range general transportation plan, including a separate plan for improvements in management of the existing transportation system; (2) an annually updated list of specific projects, called the Transportation Improvement Program (TIP), to implement portions of the long-range plan; and (3) a multiyear planning prospectus supplemented by annual unified planning work programs,

[4] Office of Management and Budget Circular A-95 requires one agency in each region to be empowered to review all proposals for Federal funds from agencies in that region. Circular A-95 replaced Circular A-82, which was created to implement Section 204 of the Demonstration Cities and Metropolitan Development Act of 1966 (42 U. SC. 3301).

Critical History of Transit Planning and Decisionmaking

Although the principal focus of this case assessment is transit planning, Boston's recent transit planning history can be understood only in the context of all the transportation planning for both highway and transit in the Boston area. Serious interest in making improvements to the transit system grew primarily in response to community opposition to proposed expressway projects. The following discussion is organized around three major phases of the planning and decisionmaking process: (1) the period of highway planning and the citizen reaction to it that culminated in the 1970 moratorium on highway construction; (2) the period of study called the Boston Transportation Planning Review (BTPR) during which transit issues came into focus; and (3) steps toward implementing the BTPR transit proposals in the period since 1972. The historical narrative is intended to provide a framework for the discussions that follow of the institutional context and technical work, in which particular emphasis is placed on BTPR and its aftermath. The history is summarized in a chronological listing that follows this section.

DECISION TO REEVALUATE HIGHWAY PLANS: THE MORATORIUM

In the late 1960's transportation issues in Boston centered around highway projects proposed during several decades of planning. Controversy arose as citizens and elected officials within Route 128 began to realize the extent of residential and open space displacement that would necessarily accompany expressway construction. The pressure increased until Governor Francis Sargent placed a moratorium on highway planning and construction in February 1970.

Beginning in 1948 the State, through the Department of Public Works, engaged in a growing highway construction program that secured widespread support among the State's business and industrial leaders. The culmination of this program was to be a series of major expressway facilities within Route 128, including the Inner Belt (Route 695), a third harbor tunnel, the final extensions of State Route 2 and Route 1-93, and construction of Route 1-95 from Route 128 in the south, through downtown Boston and the new harbor tunnel, to Route 128 in the north.

The Inner Belt—seen as the keystone of the entire expressway system—was to be the last of the three circumferential expressways serving Boston. It was to have encircled downtown Boston, passing through the Back Bay/Fenway institutional complex, crossing the Charles River, and continuing through Cambridge and Somerville.

This expressway system, which was rooted in the 1948 Master *Highway Plan,* was revised and expanded by the 1968 *Recommended Highway and Transit Plan,* a multiyear, $2 billion highway and transit construction program affecting 152 of the State's 351 communities. The 1968 plan was a product of the Eastern Massachusetts Regional Planning Project (EMRPP). EMRPP was begun in 1962 as a joint undertaking of the Massachusetts Bay Transportation Authority (MBTA), the State Department of Public Works (DPW), the Metropolitan Area Planning Council (MAPC), and the Department of Commerce and Development.

Although the 1968 EMRPP plan did include a number of transit extensions and other improvements, it was clear that only the highway program was assured of the necessary local and Federal funding resources required for construction. Through State constitutional limitations on the use of gas tax revenues, s the highway program enjoyed a ready and growing source of local matching funds. At the Federal level, the highway program was generously funded and, for interstate facilities, required only a 10 percent local matching share.

By contrast, transit construction projects required specific bonding authorization on a project-

s In 1974, voters removed this 1 i mi ta t ion i n a statewide referendum.

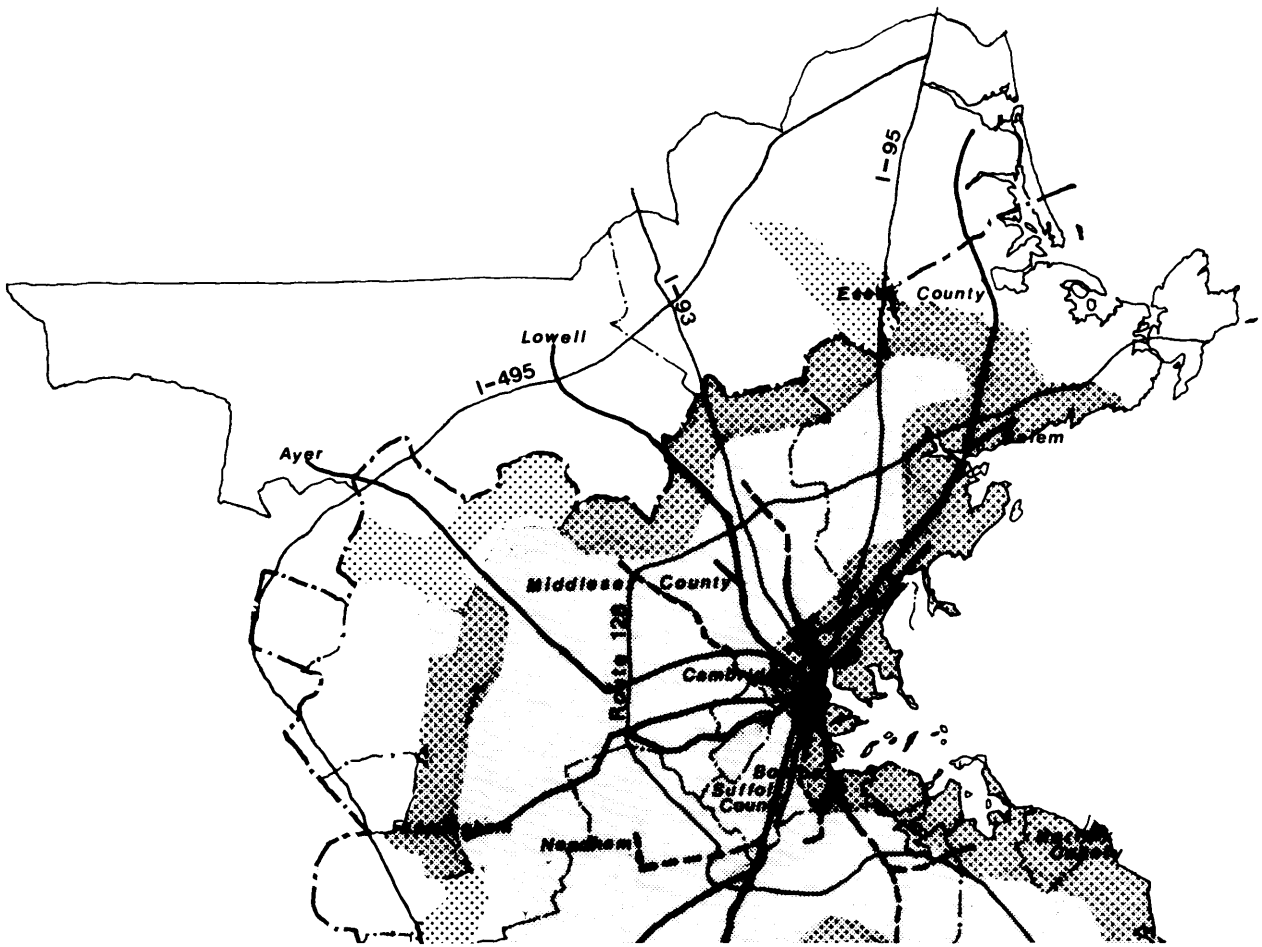
I-95
I-93
I-495
Lowell
Ayer
County
Middlesex County
Route 128
Cambridge
Suffolk
Needham

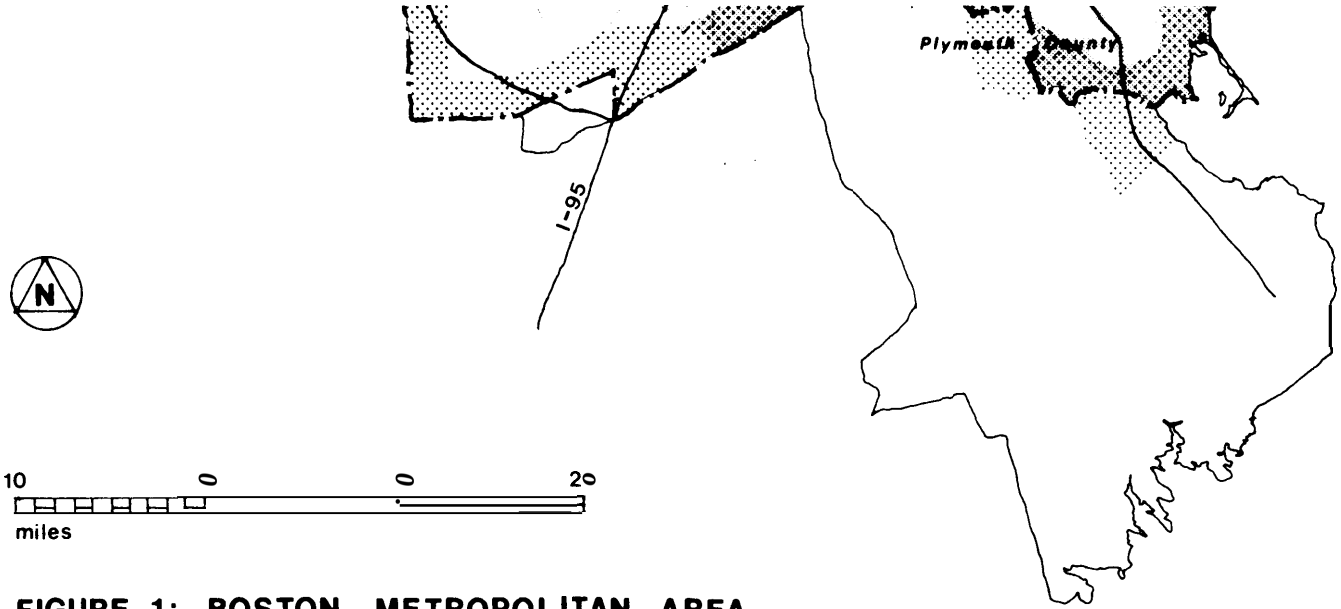

FIGURE 1: BOSTON METROPOLITAN AREA

SMSA Boundary

Metropolitan Area Planning Council

Massachusetts Bay Transportation Authority

County Boundary

Existing Rail Transit and Commuter Rail System (including segments under construction)

Proposed Extensions of Rapid Rail System

by-project basis, and the provision of bonding authority required a two-thirds affirmative vote on the part of the State legislature. Since many legislators resided in areas of the State that would not directly benefit from MBTA projects, and since the State normally assisted MBTA in defraying debt service related to capital construction projects, this legislative support was often difficult to obtain. Similarly, at the Federal level, little money was being made available for extensive transit improvement projects.

In this context popular concern over potentially destructive side-effects of highway construction began to grow. By February 1968, Cambridge and Boston had been successful undemanding a restudy of the Inner Belt. Federal Highway Administrator Lowell Bridwell committed the Bureau of Public Roads to two new studies, one to review the need for the road and the other to develop roadway design solutions that attempted to minimize anticipated adverse effects of the facility.

However, the Inner Belt was but one proposed element of the planned system. Encouraged by the Inner Belt restudy but apprehensive that the new studies would turn out to be "whitewash," local action groups continued to develop closer alliances and to organize protest rallies and demonstrations. Eventually, the Greater Boston Committee on the Transportation Crisis (GBC) **was** organized in 1968-69, and served as an umbrella organization that began to wield considerable political clout.

In 1969, Governor John Volpe resigned to become Secretary of the U.S. Department of Transportation. Governor Volpe, who had formerly served as Commissioner of Public Works and had taken a strong stand in favor of highway construction, was succeeded by Francis Sargent, also a former DPW Commissioner, who in the 1960's had approved the very expressway system that was now being called into question.

However, Governor Sargent also had served previously as Commissioner of the Department of Natural Resources. Continuing his strong interest in environmental matters, Sargent became concerned over the potential environmental degradation that could result from highway construction. Sargent and his policy advisors began to give favorable hearing to the antihighway forces. Atone critical point in August 1969, Sargent refused to allow an immediate transfer to DPW of certain State-owned parkland in the Fowl Meadow that was essential for the construction of Route 1-9s.

The highway opponents also found support in Boston's City Hall, where liberal Mayor Kevin White had replaced former Mayor John Collins in 1967. During his 8-year term, Collins alined closely with the Chamber of Commerce and other groups that favored highway construction and had spoken out for the expressway system. Mayor White's political base, which was organized around neighborhood interests, made his administration sensitive to the growing concern over displacement and disruption. b In fact, several of White's "Little City Hall" administrators were in the forefront of the antihighway (and antiairport expansion) transportation struggles. Mayor White eventually withdrew the city's support of the South End Bypass, a city-sponsored project that was essential to the efficient operation of the proposed Southwest Expressway (1-95).

Thus, by 1969, the stage was set for a complete reassessment of the State's transportation policies for the Boston area. Toward the end of the year, Governor Sargent appointed a task force, chaired by Professor Alan Altshuler of MIT, to study the State's transportation planning and decision-making process. Mayor White, other politicians, and spokespersons on the antihighways side strongly criticized the Governor for taking a middle course, and within weeks the task force's brief but sharply critical interim report to the Governor paved the way for the announcement of a general highway planning and construction moratorium in February 1970. T Sargent suspended property acquisition in the proposed expressway rights-of-way and canceled the remaining portions of the Inner Belt design study. He proposed a larger "rest udy," which became the Boston Transportation Planning Review (BTPR), to determine whether the new roads should be built, as well as where and how.

DECISION TO RECOMMEND TRANSIT IMPROVEMENTS: THE BTPR

Despite the long history of transportation-related controversy, transit issues played a relatively limited role in the Governor's moratorium

[6] Displacement was a real concern, not a potential threat; DPW had begun land acquisition and clearance in several expressway corridors.

[7] The moratorium was not applied to I-93, which was by then well into construction.

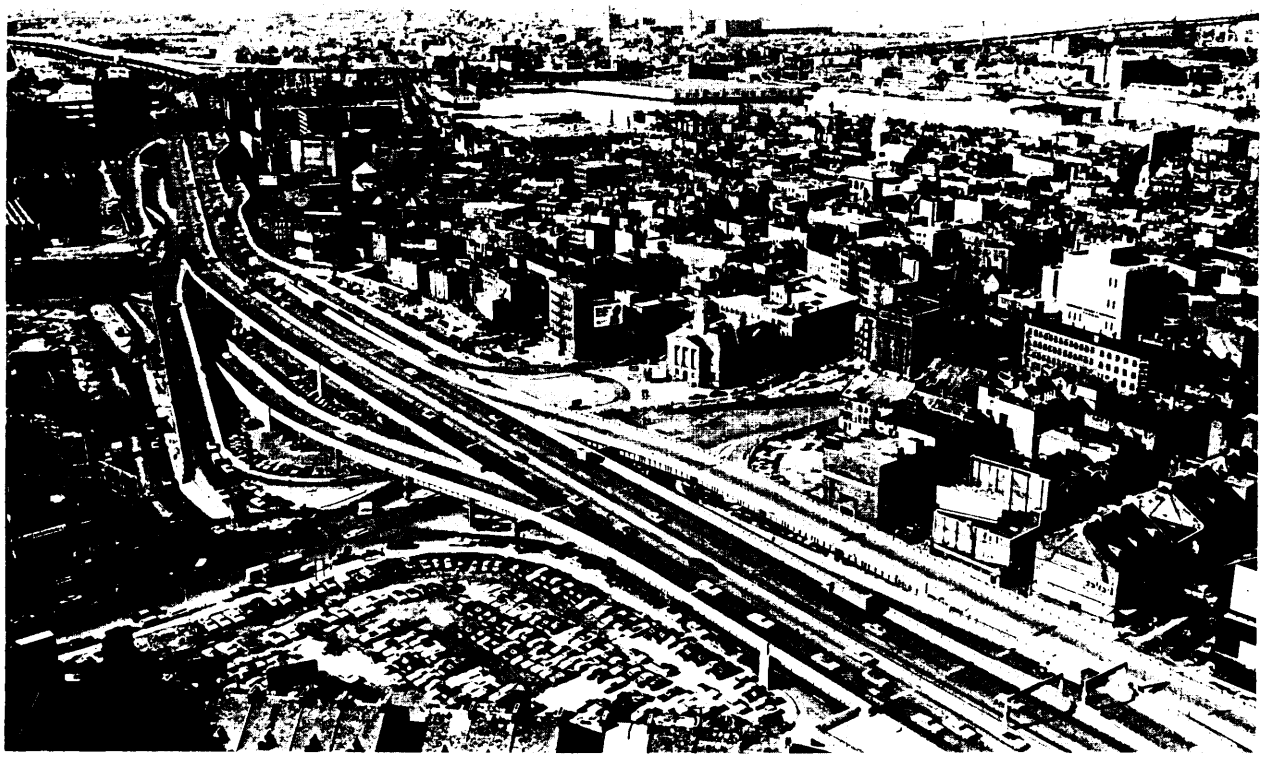

Highway construction issues dominated Boston's most significant recent transportation planning program, the Boston Transportation Planning Review

decision. The political issue was highway construction—and more importantly, the environmental and community impacts associated with highway construction. Transportation policy, as such, was not widely debated by the participants in the controversy, and there was little discussion of transportation quality or service needs.

Transit proposals had surfaced during the 1960's but drew little public attention. The Eastern Massachusetts Regional Planning Program had provided an extensive data base that MBTA used to prepare its *Program for Mass Transportation* in August 1966. The 1966 plan proposed a series of "action projects" costing an estimated $340 million. The proposals included extensions of the Orange and Red Lines, replacements of rolling stock on the Blue and Green Lines, and elimination of elevated structures in Charlestown and South End/Roxbury. The 1966 plan was updated and revised by MBTA in 1969 based on continuing planning analyses conducted by ERMPP (which concluded its work that year). The 1969 revisions updated capital cost estimates for the 1966 plan based on preliminary engineering work and inflation factors.

However, the MBTA plan did not figure prominently in the events of the following year. A number of loosely related factors account for this. First, highways presented an immediate, recognizable threat around which political action could be organized. Boston already had an established core transit system, and the highway versus transit choice was not posed as starkly as it might have been in a city with no rail transit services at all. Similarly, no major interest group opposed transit, and even prohighway interests agreed that transit was a valid type of transportation service, although of lower priority than highways, Furthermore, most of the proposed transit improvements contained in the 1968 EMRPP report were located along underused rail rights-of-way and would not require extensive displacement or disruption of the sort that often attracts the attention of political leaders. Finally, transit funding appeared too uncertain to allow

antihighway leaders to present transit as a viable alternative for the short-term future.

Moreover, very few people had a clear concept of the political or functional interrelationships between highways and transit. Two major and visible exceptions were then State Representative (now Governor) Michael Dukakis, and Professor Altshuler. Dukakis pressed Governor Sargent in 1969 to provide more highway money in the western part of the State, where he said it was needed, and to greatly expand mass transportation in Boston:

> In the western part of the State, the imbalance of highway money is an excellent political issue. And the absence of an adequate rapid transit system is a damn good political issue in the east. s

For his part, Altshuler supported a joint funding mechanism for highways and transit and perceived the role transit should play in a total transportation system,

As the BTPR *Study Design* was being formulated during the latter part of 1970, however, increasing attention was being given to transit options, Under the direction of Professor Altshuler, the BTPR Steering Committee (composed of municipal appointees and a broad array of community organization spokespersons) defined a "sketch planning" process designed to facilitate consideration of a wide range of alternatives—including modal alternatives as well as highway location and design options. With all land acquisition and highway construction activities suspended until completion of BTPR, the pressing concerns over highway displacement and disruption began to relax, and the possibility of developing a transportation policy for Boston (as opposed to antihighway policy) appeared realistic.

Nevertheless, once the Study Design was completed and the BTPR consultant team selected, it was clear that the highway issues retained first priority, for both political and practical reasons. Considerable sums had already been expended to acquire rights-of-way and to prepare them for construction; Federal interstate highway monies were available and, at that time, could be spent only on the designated highway facilities; and political commitments had been made at all levels to reach final highway decisions as quickly as possible. Moreover, the battle lines between prohighway and antihighway groups were still clearly and bitterly defined.

Meanwhile, there was no pressure to reach definitive transit decisions. Very few direct adverse impacts were attributable to any of the transit facilities under study, and those that were present were minimal in comparison to the adverse impacts of the proposed highway facilities. Although in 1971 the legislature had authorized $124 million in bonds for transit facility construction, the ability to move forward was limited by the availability of Federal assistance and, more importantly, by the fact that several of the most important transit projects were to be built jointly with proposed highway projects, so that no real progress was possible until the highway issues had been put to rest.

Equally important, most of the key members of the BTPR consultant team had had considerable prior experience with major projects elsewhere in the country. They were prepared by training and experience to focus on highway issues and proved to be less well prepared for conceptualizing and detailing innovative transit solutions. Although MBTA had experienced transit planners on its own staff, the MBTA executive staff declined to participate actively in the technical work of the BTPR or to advocate forcefully an expanded transit program or an innovative transit solution. MBTA's prime objective was to assure that nothing that occurred during the BTPR would significantly disturb MBTA preestablished plans and priorities—which had been cleared through the State legislature, whose members had been in the past, and would be in the future, required to approve MBTA's bonding requests.

Despite these constraints, BTPR did identify and analyze a number of transit projects that had not received top priority in previous transit planning studies. These projects included (a) the Commuter Railroad Improvement Program (CRIP);9 (b) a proposal for circumferential transit service along the inner belt corridor; lo (c) analysis of replacement service for Roxbury and the South End; ll (d)

[8] Lupo, Colcord, and Fowler, *Rites of Way: The Politics of Transportation in Boston and the U.S.* Boston: Little Brown, 1971. The long and often bitter history of highway opposition in Boston has been ably chronicled in this book.

[9] BTPR, *Commuter Rail Improvement Program.* Boston 1972.
[10] BTPR, *Circumferential Transit.* Boston 1972.
[11] BTPR, *Southwest Corridor Report.* Boston 1972.

studies of special mobility needs; 12 and (e) a bus tunnel alternative to the third harbor crossing. 13

(a) The proposed track bed, rolling stock, and station improvements recommended by the CRIP study were supported by Governor Sargent and have been incorporated into BMTA's 10-Year *Transit Deuelopment Program*. The Boston area's extensive commuter rail network had been sorely neglected for years. MBTA's rapid transit extension program favored the gradual replacement of commuter rail service by rapid transit extensions which would generally occupy existing rail rights-of-way. Suburban commuter rail patrons argued strongly that substitution of transit service often meant several years' suspension of any service during construction, and that the completed rapid rail extensions rarely served as large an area as the commuter rail system, despite the high capital costs involved. BTPR investigated the feasibility of upgrading and retaining the commuter rail system in light of the costs to MBTA for continued subsidization of commuter rail service. The CRIP study paralleled the State's negotiation for and subsequent purchase of the Penn-Central Railroad's trackage on the southern side of Boston, a step which has preserved some 140 miles of track for transportation purposes. (Similar negotiations with the Boston & Main Railroad for purchase of trackage to the north of Boston were completed in July 1975.)

(b) The circumferential transit service project is briefly described in MBTA's Transit Development Program but is not proposed for construction within the next decade. The concept was studied late in 1971 after Governor Sargent decided not to construct the Inner Belt expressway. The new facility was considered both because it could make use of lands already acquired by the State and because it could provide a much-needed transit link between the existing radial rapid transit lines. The possibility of connecting the Red Line in Cambridge with the Green and Orange Lines in the Back Bay/Fenway institutional complex in Boston was particularly attractive. Presently, large volumes of trips are made between these points, either by bus or by traveling by transit to downtown Boston and transferring to an out-bound rail car on the Orange or Green Lines. The circumferential route could improve service on these and other already crowded lines. In a broad conceptual study of the circumferential line, both PRT and conventional transit systems were investigated, as well as alternative alinement locations and distances. The most extensive version given serious study would connect South Station in Boston to Sullivan Square in Charlestown.

(c) MBTA's proposed Orange Line Relocation and Extension would have resulted in a reduction of rapid transit service to two heavily transit-dependent Boston neighborhoods. Largely as a result of continued political pressure, these communities were able to direct the attention of BTPR toward an analysis of potential transit replacement services, Although the precise nature of these replacement transit services has yet to be defined in detail, the *10-Year Transit Development Program* does provide for "high standard" replacement service to each community as part of the Orange Line Relocation Program. This commitment represents a recognition of the need to balance a policy of suburban-oriented rapid transit extensions with a policy of continued quality service for transit-dependent inner-city neighborhoods.

(d) BTPR staff assisted several communities in analyzing the need for special mobility and coverage transit services in addition to existing bus and rapid transit services. Although very few concrete changes resulted from these studies, several new bus routes were established, and MBTA has begun to give more attention to management and other low-capital-intensive transit programs that serve special mobility needs or provide broader transit coverage. In addition to a reduced fare for the elderly, which was introduced prior to BTPR, recent innovations include the use of prepaid passes, "dime time" fares during midday hours, and increased express bus services.14

(e) As an alternative to a general-purpose third harbor tunnel, BTPR developed a two-lane bus tunnel option that would be open only to buses, taxis, airport limousines, emergency vehicles, and possibly multioccupancy automobiles. The bus tunnel would provide sufficient capacity to relieve congestion in the existing harbor tunnels but would not entail the cost or disruption of the

12 BTPR, *Mobility Problems of Elderly Cambridge Residents*. Boston 1972, and BTPR, *Special Mobility Staff Report*. Boston 1972. See also, BTPR, *Study Element 2 Summary Report: Community Liaison and Technical Assistance*, Boston 1973.

13 BTPR, *Third Harbor Crossing*. Boston 1972.

14 The "dime.time" reduced fare experiment failed to increase off-peak riders hip on the subway system and was discontinued in August 1975.

previously proposed six-lane general-purpose tunnel. Although this facility was supported by Governor Sargent, the legislature has failed to remove a statutory restriction that prohibits construction of any new vehicular tunnels in proximity to the existing harbor tunnels.

STEPS TOWARD IMPLEMENTING TRANSIT IMPROVEMENTS

Although Governor Sargent dropped most of the major pending highway proposals and announced an aggressive transit improvement program for the Boston area during a statewide televised broadcast in November 1972, little tangible progress has taken place during the 2% years since that time. A number of interrelated factors account for this failure to move forward with the region's transit improvement program.

First, despite the generally favorable press response and public acceptance of the Governor's transportation policy, some prohighway sentiment continued during the months following the BTPR study. The Governor and his transportation advisers came under backstage pressure for a full or partial reconsideration of various highway project decisions.

Second, the source of funding for the transit improvement program was not clear. Secretary Altshuler had been instrumental in lobbying for inclusion of an interstate transfer provision in the Federal Highway Act of 1973. Even though a transfer provision favorable to Massachusetts was enacted, a considerable amount of time and effort was expended by State officials in working out the details of the interstate transfer program with Federal officials. The more than $600 million that was eventually promised to the State was essential to the definition of a credible transit construction program, and until this amount was finally committed, the State had difficulty in developing a workable schedule and list of priorities for the region's 10-year program.

Third, practical and political difficulties involved in the various transportation agency reorganizations also have occupied a substantial amount of staff time. These include the continuing consolidation of transportation planning and policymaking responsibilities within EOTC, the creation of both JRTC and CTPS (as well as the development of an open participatory planning process within the JRTC/CTPS framework), and the restructuring of MBTA, each discussed elsewhere in this case assessment. Each major shift of powers and responsibilities has involved extensive interagency negotiations and compromise. At times these political realinements took priority over technical and administrative matters.

Fourth, UMTA declined to accept any of the draft environmental impact statements prepared by BTPR. UMTA judged these statements to be inadequate because, like the BTPR study process itself, they focused largely on highway facility alternatives. Thus, MBTA has been compelled to develop additional alternatives and to restudy the environment} effects of each of the transit projects included in its current program. Both former EOTC Secretary Altshuler and the present secretary, Frederick P. Salvucci, have said that UMTA'S decision created unnecessary delays in the implementation of Boston's transit program, particularly due to the length of time consumed in UMTA'S reviews of the new studies, (UMTA—unlike the Federal Highway Administration—retains the responsibility for actually preparing and circulating the formal draft and final environmental impact statements despite its small, overworked staff.) Secretary Salvucci has argued further that the region's transit program should be exempt from strict application of environmental review procedures since transit projects are environmentally "clean," particularly in comparison with highway facilities. In any event, the two secretaries' arguments to date have been ineffective and, some critics say, they may have contributed to further delays in advancing projects for final approval and implementation.

Fifth, despite a continuing broad-based consensus in favor of the general transit policy underlying Governor Sargent's transit improvement program, opposition to specific transit project location and design details has arisen—as witnessed by controversies over the planning and design issues surrounding the relocated Orange Line in the southwest corridor; the Red Line extension from Harvard Square through Cambridge, Somerville, Arlington, and Lexington; and the Red Line extension from Quincy along the South Shore. In brief, local citizens and officials have expressed concern over potential environmental, land use, parking, and local street congestion impacts due to new transit construction and operation, especially in the vicinity of transit stations. In large part the

opposition has been aggravated by a lack of adequate information regarding the potential social, economic, and environmental effects of the various projects. However, each of the major interdisciplinary studies now underway (or soon to be initiated) 15 should provide the technical data required to conduct an informed debate on the issues, even if they do not fully resolve the points in contrivers y.

During the 1974 gubernatorial election campaign, the present Governor, Michael Dukakis, sharply criticized Sargent for his administration's lack of transit construction activity and promised to push vigorously at the regional, State, and Federal levels for increased transit assistance and project approvals. Nevertheless, despite a continuing commitment to transit progress, the Dukakis administration has not had any notably greater success in advancing the transit program into actual construction. The basic problems cited above, as well as the State's current and pervasive fiscal crises, continue to plague the program. MBTA's continually rising operating deficit also affects progress toward transit improvements, as evidenced by the recent abandonment of MBTA's off-peak hours "dime time" fare experiment, which proved to have been unsuccessful in attracting new ridership.

At the same time, the long-term outlook for Boston's transit future remains optimistic. The basic consensus in favor of an aggressive and extensive transit improvement program has continued, despite differences over specific location and design details, the appropriate transit mode, and implementation priorities. Reorganization of the region's and the State's transportation agencies promises to improve transit planning and operation. The recent purchase of the Boston & Maine Railroad's trackage north of Boston for $39 million (subject to approval by the bankruptcy trustees), like the previous Penn-Central system acquisition to the south, will provide a ready source of rights-of-way for transit and other transportation improvement facilities. Finally, the growing awareness and concern over environmental, land use, and energy consumption problems may tend to encourage transit programs in Boston, provided localized impact issues can be successfully resolved.

[15] See page 29

Chronology of the Transit Planning Process

1825 The first omnibus line was started between Boston and Roxbury.

1889 The first electric streetcar line was opened.

1897 The first subway in the United States was opened. (It is still in use as part of MBTA's Green Line.)

1924 The Boston Harbor transit tunnel was converted to rapid transit use. (It is now part of Blue Line.)

1926 *The Report on Improved Transportation Facilities* developed a plan for the extension of rapid transit facilities.

1945-7 Reports by the Metropolitan Transit Recess Commission (Coolidge Commission Reports) recommended extension and improvement of rapid transit routes and the creation of a Metropolitan Transit Authority (MTA).

1948 The *Master Highway Plan,* was published. This plan set the philosophy and, with modifications, the location of major proposed expressway facilities within and including Route 128. It was prepared by C. A. Maguire & Associates.

1957 The *Report on Traffic Studies for the Boston Meiropolitan Area* reexamined the Master *Highway Plan* in light of revised travel forecasts. It was prepared by Coverdale & Colpitts.

1962 The Eastern Massachusetts Regional Planning Program (EMRPP) began.

1964 The Massachusetts State legislature established the Massachusetts Bay Transportation Authority (M BTA), expanding the 14 city-and-town MTA District to 78 (now 79) cities and towns,

1966 *Program* for *Mass* Transportation was published by the MBTA.

1968 The Eastern Massachusetts Regional Planning Project published its *Recommended Highway and Transit Plan.*

1969 MBTA released a *Reuised Program for Mass Transporlalion.*

1969 Governor Sargent appointed a transportation task force to advise him on steps to take in reevaluating the region's highway program.

1970 In January, the transportation task force's interim report recommended a moratorium on highwa, construction and planning, and on February 8, Governor Sargent formally announced the moratorium.

Later in the year a Governor-appointed Steering Committee published *Study Design* for the Boston Transportation Planning Review.

1971 The State legislature authorized bonds totaling $124 million to finance designated transit improvement projects.

A program to reorganize State administrative agencies was begun and the Executive Office of Transportation and Construction created.

1971-3 The 18-month Boston Transportation Planning Review (BTPR) study was conducted. At its conclusion the Governor deleted several proposed expressway projects within Route 128 and opted instead for a transit strategy. Subsequently the Governor began seeking transfer of Federal interstate funds and additional transit funds to carry out a more than $1 billion transit program.

1973 The State legislature voted to assume 50 percent of MBTA's operating deficit.

The U.S. Federal-Aid Highway Act of 1973 authorized transfer of certain interstate funds to transit projects *and* relaxed the Urban Systems program to allow some transit funding.

The Joint Regional Transportation Committee (JRTC) was created by joint

agreement of the Executive Office of Transportation and Construction, the Department of Public Works, the Metropolitan Area Planning Council, the Metropolitan Boston Transportation Authority, and the MBTA Advisory Board.

1974 The U.S. Department of Transportation approved an interstate fund transfer of over $600 million to Boston.

The Central Transportation Planning Staff (CTPS) organization was created by State transportation officials.

1974-5 MBTA issued its *10-Year Transit Development Program* and selected planning-engineering consultants for the Orange Line, Blue Line, and Red Line extension projects.

1975 In January, the Executive Office of Transportation and Construction (EOTC) assumed responsibility for preparing the region's annual transit improvement program. In March, the State designated a multiagency group to be the Metropolitan Planning Organization. This group was created by a five-agency compact signed by the Executive Office of Transportation and Construction, the Department of Public Works, the Metropolitan Area Planning Council, the Massachusetts Bay Transportation Authority, and the MBTA Advisory Board. The EOTC Secretary was named chairman.

Assessment of the Planning and Decisionmaking Process

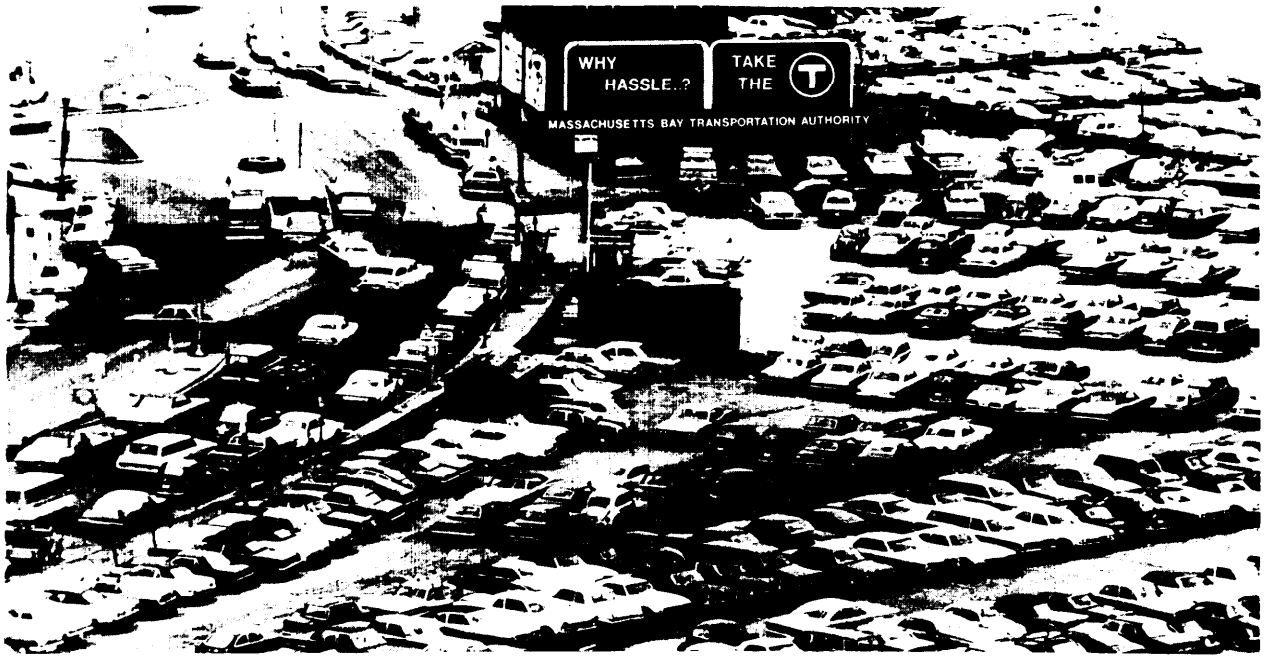

INSTITUTIONAL CONTEXT

The institutional context for transit decision-making in the Boston region is complex because of the sheer number of jurisdictions in the area and the presence of the State capital. However, over the past few years a relatively effective institutional structure has evolved in which the State Executive Office of Transportation and Construction (EOTC) plays the lead role, working closely with the region's Central Transportation Planning Staff.

Forum for Decisionmaking

Historically, transportation decisions in Boston were made by semiautonomous highway and transit agencies and local governments. Recent agency reorganization programs have centralized transportation policymaking in EOTC and clarified transportation planning and project development responsibilities in the Boston area.

Historically, the Massachusetts Bay Transit Authority (MBTA), the MBTA Advisory Board, and the General Court (the State legislature) shared the power to identify and implement new capital improvement projects. The General Court must approve new bonding authority by a two-thirds affirmative vote. Since such authority traditionally has been granted on a project-by-project basis, the General Court has retained a substantial measure of control over the timing and location of new capital improvement projects. Considering that $389 million in bonding authority was authorized during the first 10 years of MBTA's existence (1964-73), the General Court has enjoyed considerable leverage over MBTA's construction program.

As of January 1, 19'75, however, an additional major actor has been inserted into the decision-making process. On that date the Exectuive Office of Transportation and Construction (EOTC) assumed responsibility for preparation of the region's annual program for mass transportation. Because the Secretary of Transportation and Construction is appointed by and serves at the pleasure of the Governor, the executive branch of

State government is now directly involved in the transit planning and decisionmaking process. As its transit planning responsibilities have shifted to EOTC, MBTA has come to function primarily as a transit operating agency. The MBTA Advisory Board, however, still participates in transit policymaking, albeit in a minor way, through its statutory power to approve MBTA's capital improvement program.

EOTC holds a powerful position in Boston's transportation decisionmaking by virtue of its responsibility y for all transportation issues—highway, rail, port, and airport. Since the governmental reorganization plan of 1971, EOTC has consolidated under one administrative roof a number of agencies, boards, and commissions that previously were autonomous in terms of setting transportation policies and operating transportation facilities within the Boston area. These entities include the Department of Public Works, MBTA, Massport, Masspike, and certain transportation functions of the Metropolitan District Commission.

In March 1975, ETOC'S lead role in regional transportation planning was officially sanctioned when the EOTC Secretary was named chairman of the five-agency collective Metropolitan Planning Organization. Thus the EOTC Secretary is ultimately responsible for the distribution of all Federal transportation grants within the area. EOTC provides an effective centralized forum for creation and coordination of basic transportation policy. This forum has led to more efficient transportation planning and management of operations.

The Department of Public Works (DPW), like MBTA, has transferred much of its policymaking function to EOTC. Although DPW retains a considerable amount of power—due to its size budgetary resources, and political connections throughout the State—major policy and project decisions are made by the Secretary of EOTC. Similarly, although DPW'S Bureau of Transportation Planning and Development maintains a large staff of transportation planners, CTPS has taken the lead role in technical transportation planning in the Boston area.

Because it is the region's A-95 review body and coordinates the area's land use planning efforts, the Metropolitan Area Planning Council (MAPC) might be expected to take a relatively strong position in regional transportation decision making. However, due to the jealously guarded independence of local cities and towns in the Boston area, MAPC usually exercises a cautious, advisory role in the region's affairs. This approach has tended to limit the influence exerted by MAPC in recent years on transportation planning and decisionmaking, on both a technical and policy level.

Since its creation in 1974 the Central Transportation Planning Staff (CTPS) has become the vehicle for most technical transportation planning work in the region. CTPS is an interdisciplinary group of technical specialists modeled after the BTPR study team. The structure facilitates close coordination between transportation and land use planning.

Although officially responsible only for the technical aspects of the planning process, CTPS tends to become involved in policy matters through a close working relationship with EOTC. When EOTC recently was given responsibility for preparing the region's annual transit development program, it delegated this task to CTPS.

The Joint Regional Transportation Committee (JRTC) acts principally as an advisory body. Through this organization DPW, MBTA, and MAPC—along with numerous delegates from cities and towns as well as private organizations—can review decisions reached by EOTC and CTPS. JRTC does not have a technical staff and has no specific planning responsibility other than its reviewing and advisory duties.

Accountability of Decisionmakers

The recent statutory reallocation of transit decisionmaking responsibilities, discussed in the preceding paragraphs, tends to focus considerable attention on the Office of the Secretary of Transportation and Construction and—ultimately—on the Governor's office as well. The Governor is the only elected official involved in transit-related decisions who is responsible to the entire regional electorate, and therefore the gubernatorial election is the public's most direct formal check on the decisionmaking process.

Lodging the power for transit decisionmaking in a Governor's appointee has several advantages in terms of accountability. Decisionmakers are most directly accountable if the public can vote them in and out of office. The EOTC secretary is not elected, of course, but his direct superior is. For the past several years Massachusetts Governors have

been deeply involved in Boston transportation issues. The Governor and the secretary therefore, are not only more directly accountable than the other transportation decisionmakers in the area but they bring greater visibility to the process. In addition, the Governor and EOTC can view issues with more of a truly regional perspective than representatives from local jurisdictions, who understandably tend to give first priority to more parochial interests and obligations.

MBTA is directed by a board of directors who, although initially appointed by the Governor, serve for a fixed term and have no direct accountability to the electorate. However, the chairman of the board of directors, who also functions as the chief executive officer of MBTA, does serve at the pleasure of the Governor.

By virtue of voting to approve financing for major transit projects, the State legislature influences transit decisions. These legislators are subject to election and therefore can be held accountable for their actions. However, representatives of the State legislature are accountable only to their limited geographic constituencies and—since many representatives are elected from districts outside the MBTA area—a large number have no political ties to the residents and voters of the MBTA district itself.

Similarly, members of the MBTA Advisory Board are appointed by each of the 79 member cities and towns of the MBTA district. Their accountability is also limited to the local area which they represent. Likewise, each MAPC representative owes allegiance to one of the 101 cities and towns participating in that agency.

The Joint Regional Transportation Committee (JRTC) is an advisory body in which nearly half the committee members represent various interest groups. Although the structure may improve the extent to which the full range of public viewpoints is brought to bear on the transit decisionmaking process, there are no formal channels for members of the public to exercise approval or disapproval of the way their interests are being represented, The Central Transportation Planning Staff (CTPS), because it consists of technicians, is further removed from accountability.

Public Involvement

BTPR constituted a major experiment of nationwide significance in its approach to developing an open, participatory study process. The BTPR philosophy has been carried over to the newly established JRTC and CTPS.

The BTPR process greatly expanded and refined the process of citizen and public agency participation in the transportation planning process. Numerous individuals, groups, and agencies that previously had little interest or means for becoming involved in transportation decision making were provided with a forum in which conflicting views could be debated and resolved. While not without flaws, the process of discussion, negotiation, compromise and—most important y—mutual education was greatly facilitated.

BTPR involved many private groups and individuals beyond the traditional and relatively well-organized economic and political interests that traditionally participated in the formulation of regional transportation policies. The Steering Group that developed the BTPR Study *Design* was a broadly representative body with delegates from cities and towns, State agencies, and private organizations throughout the Boston area. It continued in operation during the BTPR in a policy advisory capacity as the BTPR "Working Committee." Many of the same groups continue to be involved in transportation planning through membership on the Joint Regional Transportation Committee.

On the other hand, criticism of the BTPR approach to community participation was voiced by organizations and individuals who were dissatisfied with the study's findings and felt their interests were not adequately represented. In particular, groups fearful that curtailing highway programs would harm Boston's economy, and particularly the viability of the downtown, charged that the prohighway point of view was under-represented in the participation scheme. The Boston Chamber of Commerce, for example, produced its own evaluation of the economic effects of eliminating the Southwest Corridor, recommending that the highway—which would have provided the I-95 connection between Boston's CBD and Providence and New York to the south—should be built. The Chamber's report made little impact on BTPR decisionmakers, but post-BTPR citizen involvement campaigns have been careful to welcome groups such as the Chamber of *Commerce and* other traditional urban-development-oriented organizations into the process.

The BTPR community involvement philosophy has been incorporated in the procedures and

institutions that have been established since 1973—notably in the Joint Regional Transportation Committee, as well as in project-by-project "working committees" formed from representatives of local and regional groups and public agencies having a stake in specific project decisions. Staff support for active and continuing community participation is provided by the Central Transportation Planning Staff and, as a matter of policy, all planning budgets or consultant contracts are expected to set aside 10 percent of project planning resources for the purposes of community liaison and technical assistance.

Although project public hearings continue to provide a definite formal point of public presentation and comment, numerous smaller briefings, working meetings, and presentations are normally held as a matter of course for every major and most minor planning studies. The comments and criticisms which surface during this involvement process have an important impact—although one difficult to measure—on decisions reached by the responsible decisionmakers.

Nevertheless, the considerable public opposition to MBTA's proposed $30 million Red Line extension to the South Shore is evidence of the need to devote more attention to the early identification and resolution of potential community-based opposition.

TECHNICAL PLANNING PROCESS

With the growth of an increasingly open transportation planning process, as well as the involvement of politically and technically astute community and public agency participants, transit planning in Boston since BTPR has been characterized by greater technical detail and clarity. A broad set of goals has evolved, and at least a beginning has been made toward a thorough evaluation of alternative project designs. However, lack of attention to innovative transit improvements and the tendency to disregard transit's possible harmful impacts both are potential obstacles to continued progress.

Goals and Objectives

Prior to BTPR, transit goals for the Boston region were relatively narrowly focused. In contrast, BTPR's goal-setting process was broadly participatory and has led to a comprehensive set of formal objectives intended to guide the refinement of proposals for transit improvements.

When MBTA was authorized in 1964, its enabling legislation set forth a general statement of the new agency's purpose. MBTA was expected to "develop, finance, and operate the mass transportation facilities and equipment in the public interest . . . and to achieve maximum effectiveness in complementing other forms of transportation in order to promote the general economic and social well-being of the area and of the Commonwealth."[16]

MBTA's 1966 *Program for Mass Transportation* elaborated on these broadly stated goals in the course of explaining the advantages of its proposed transit improvements. As stated in the 1966 program, MBTA's transit objectives were overwhelmingly oriented towards cost-efficient "hardware" improvements which would attract additional patronage by improving both the image and the convenience of the region's transit system. Primary emphasis was given to rapid rail transit extensions, new equipment, and modernization of existing stations. "Outmoded" systems—such as commuter rail service—were to be reemphasized unless "satisfactory cost reductions" could be achieved. No mention was given either to regional or transit station area land use considerations, to planning process concerns, or to the identification and minimization of adverse impacts that might be associated with a given improvement project. While these and other nontransportation issues are recognized in the sections of the 1966 program containing detailed descriptions of improvement projects, they are conspicuously absent from the overall statement of objectives.

In terms of the social and economic bases of the 1966 program, MBTA relied exclusively on the land use and travel forecasts prepared by the Eastern Massachusetts Regional Planning Program (EMRPP). Although the EMRPP study helped advance the national state-of-the-art in the application of transportation planning and travel behavior theory, it miscalculated the future changes in the Boston area's distribution of population and

[16] Section 5 (a) of Chapter 161A of the General Laws.

employment. 17 The EMRPP assumed that continued low-density suburbanization of population and employment was both desirable and inevitable—assumptions that are being called into question by environmentalists and urban community representatives in the Boston area. MBTA's 1966 *Program for Mass Transportation* reflected this assumption by giving priority to building attractive and efficient rapid transit extensions to growing suburban communities rather than improving services and facilities in established residential communities in and around the regional core.

BTPR provided a forum for articulating and debating alternative transportation and land use goals for the Boston region. As a result of the BTPR study, new goals and objectives have been developed to guide MBTA's planning projects. These goals reflect a broad range of social, economic, environmental, and transportation issues and have been incorporated into MBTA's 10-*Year 'Transil Deve/opmenl Program*— 1974-83 to assist in carrying out the region's emerging transportation policy of greater emphasis on transit.

One of the MBTA's principal goals calls for emphasizing improved access to existing areas of dense development, particularly the downtown, in order to support efforts to reduce sprawl and concentrate development at nodes. The central business district is considered a "unique regional and indeed national resource" to which "State and city policy" encourages workers to commute by transit. Another important goal, addressing the question of equity, calls for "an integrated network of public transportation facilities and services" in which "intensive coverage of dense close-in residential areas is as important as extensions into the suburbs. " Environmental objectives also are presented, such as the use of existing transportation rights-of-way. These newly defined goals and objectives provide a point of reference for evaluating specific transit programs and improvement projects within the Boston region

I'The miscalculations were not due to lack of technical expertise. EM RPP's analyses were based on reasonable estimates of future conditions; they continue to be an invaluable source of information on transportation planning in the Boston region. These projections proved wrong because of inherent difficulties in forecasting future shifts in public policies, values, and priorities for growth and development.

Development and Evaluation of Alternatives

Unlike areas that do not have an existing transit system in operation, the Boston region is not engaged in a debate over basic transit systems alternatives. Each of the major elements in the existing system—rapid rail, commuter rail, express and local bus service—is recognized as a necessary component of a total system. Moreover, changes in any single component in the existing system are limited to a degree by the practical necessity of joining with other existing facilities. Thus, the rapid rail extensions join with existing terminals or with other major intermediate station locations.

BTPR carried out the most significant alternatives analysis in Boston transportation planning history. This significance is not due to the depth of analysis of transit alternatives. BTPR was fundamentally a highway study, in which the transit alternatives examined were in large part MBTA's long-standing rapid transit proposals. Instead, the strengths of BTPR lay in its procedures for alternatives analysis and citizen involvement processes.

The entire alternatives selection process was carried out at a corridor level, in each of the four transportation corridors considered by the BTPR. First, as many transportation alternatives as possible were generated for each corridor. Each suggestion—from planners, citizens, the business community, or other sources—was developed at a broad sketch plan level of detail, and the less promising options were eliminated. The remaining alternatives were studied in greater depth. The evaluation process was iterative, building time into the study schedule for reexamining alternatives that had been passed over and for adding new options. When the final decisions evolved, a full environmental impact statement was made for each set of final alternatives.

BTPR's citizen participation program used four vehicles for citizen involvement. The strongest forum was the Working Committee, a widely representative group that worked with planners for over 3 years—all the way from the designing of the work program and setting goals to the period of final design at the conclusion of the alternatives evaluation. More conventional forums included formal public hearings and a great number of informal meetings with private individuals and local groups with specific smaller-focus problems. Finally, there was a number of community

organizers hired individually to help citizens who felt excluded from the study proceedings.

Since BTPR, three issues have figured most prominently in MBTA's development and evaluation of alternatives. One issue involves the selection of projects for study. Another concern is the question of setting priorities among the proposed projects. The final issue relates to the procedures to be followed in the project-level technical work.

The current transit program incorporates MBTA's long-standing rapid transit proposals, supplemented by a renewed emphasis on the retention and improvement of commuter rail service. Several reasons account for the survival of the MBTA projects over nearly 10 years marked by changing public opinion and a major transportation planning program, Most importantly, until recently transit proposals were considered noncontroversial, and no major interest group opposed them. The public—and BTPR—were concerned primarily with highways, which threatened far more serious impacts than the MBTA transit proposals 18 but did not challenge the earlier ones, which still dominate MBTA's list.

The selection of projects to appear on MBTA's longstanding list of rapid transit proposals, which was updated most recently for the 10~-Year Development *Program,* appears to have been influenced in some cases by considerations beyond strictly defined transportation needs. As in previous MBTA plans, major improvement projects are distributed among all important transit corridors, although in some cases the need for a particular project has been questioned. For example, extension of the Blue Line to the North **Shore is included** in the program, although BTPR found that no extension would be needed due to the presence of commuter rail service in the corridor. In a different kind of case, MBTA had budgeted funds to allow depressing the Orange Line when it is relocated to the Penn Central right-of-way embankment, even though the added cost will be $40 to $60 million. In both instances, MBTA appeared to be responding to public demand for top-quality transit service and improved community quality. The proposed options may in fact be the most desirable ones, but the questions they raise create pressure for undertaking a thorough reevaluation as the next step in the planning process.

The popular appeal of conventional rail rapid transit may account for MBTA's continued emphasis on extending and improving its transit system with attractive new equipment. The 10-Year *Transit Development Program* reflects relatively little attention either to programs for expanding bus service and other lower-cost transit alternatives or to technological and service innovations.

Regardless of the grounds for selecting projects, once the list is compiled the question becomes how to set priorities among them: funds spent in one corridor will not be available in another. MBTA's strategy has been to give equal weight to three categories of improvement projects:

- **Improvements to Existing System**

  Urgent remedial improvements
  Construction of new bus garages
  Continued updating of revenue equipment fleet
  Continued modernization of existing plant
  Continued station modernization

- **Commuter Rail Improvements**

  Increasing the adequacy of the revenue equipment fleet
  Improving rights-of-way now owned by MBTA
  Acquisition and improvement of additional rights-of-way
  Terminal and service facilities improvements

- **Extensions to Electrified System**

  Completion of Red Line to South Braintree
  Extensions to Orange Line
  North Shore Blue Line improvements
  Extension of the Red Line beyond Harvard Square
  Relocation of Orange Line

While this listing provides a generalized statement of priorities within each category, there is no discussion of potential trade-offs and no schedule showing the sequence of improvements over the next decade. MBTA assumes that projects in each category will be pursued concurrently, both to permit implementation of some while the in-

[18] See page 16.

evitable delays and reversals hold up progress on others, and to be in a position to take advantage of the maximum amount of Federal aid as it may become available even on short notice. Thus, a final definition of priorities has been postponed pending a clarification of project approval requirements and receipt of Federal funding assistance, By hedging the priority question in these ways, MBTA avoids promising to move forward with one project at the expense of another.

With respect to the project-level evaluations of alternative location, design, and modal options, MBTA is relying on project study teams organized in concert with the Central Transportation Planning Staff to investigate the impacts and benefits of specific alternatives. The goal is to develop a local consensus on a preferred alternative, taking into account non transportation as well as transportation factors in a broad-based evaluation process.

Three project study teams are in the process of organization or have already begun technical work. These include the Southwest Corridor study of the Orange Line relocation, the North Shore study of the Blue Line extension to Lynn, and two studies in the Northwest Corridor concerning the Red Line extension from Harvard Square to Route 128 in Lexington. As yet, the work has not progressed to the point where the technical products can be critically evaluated.

1n the past, at least, there has been a tendency to compare the transit improvement programs with the impacts of previous highway system plans rather than to conduct an assessment of transit proposals on their own merits. This attitude is reflected in the resistance of State transportation officials to recognize that major new transit facilities often involve significant social, economic, and environmental impact issues. This approach, if it continues to exist, could hinder the application of technically sound evaluation procedures in the recently initiated studies. However, each of these major studies has been structured to allow in-depth consideration of a full range of alternatives,

Financing and Implementation

As noted, MBTA has not addressed the question of priorities in detail. In part, this issue has been avoided by assuming the maximum availability of Federal aid, with the implicit assumption that local funding will be authorized as needed to match available Federal funds.

Implementation of the 10-Year Transit *Development Program* is estimated to cost a total of $1.75 billion, with the Federal share amounting to $1.4 billion, and the local share $350 million (see Table 2). Funding at these levels will require a marked increase over previous levels of expenditure in the Boston area for both locals and the Federal Government. Between 1965 and 1973, Federal transit assistance to MBTA averaged $32 million per year, while local funding averaged $15 million per year (see Tables 2 and 3). The current program would require Federal funding at an average rate of $140 million per year with local funding at $35 million per year,

Under current legislation, the Federal transit program could not provide the $1.4 billion sum without seriously undercutting assistance to other urban areas. However, some $600 million in Federal funds is expected to become available through the interstate transfer provisions of the 1973 Federal-Aid Highway Act, leaving only $800 million to be obtained from UMTA'S regular program—a figure that appears reasonable within the context of increased Federal funding support for transit.

In terms of local funding, only $100 million of the total $350 million projected for the lo-year program has been authorized by the State legislature. Thus, it is assumed that the remaining $242 million will be authorized when needed in the future. Given the State's current financial crisis, it is unclear whether these funds will be forthcoming without difficulty, especially since the State traditionally has assumed responsibility for a major share of MBTA's debt service requirements. If the State continues to assist MBTA in defraying current operating costs, it may become increasingly unwilling to compound its financial obligations unless it can be demonstrated that the new projects will result in operating cost savings or efficiencies.

Most critically, however, MBTA's lo-year cost estimates are stated in 1974 dollars and therefore are lower than the real costs will be, depending on when the projects are carried out. The program explicitly assumes that the level of Federal aid will be increased during the next decade "at a rate at least equal to the rate of inflation," and it is implicit that State funds also will keep pace with inflation. Any difficulties in meeting the stated funding requirements, of course, will grow more serious as costs rise.

TABLE 2.—Massachusetts Bay Transportation Authority 1974-83 Transit Development Program Capitai Improvements in Miiiions of Doiiars

Project	Total for Period	Local Share		Federal Share					
		Funded	Unfunded	Total	FY 74-75	FY 76	FY 77	FY 78	FY 79-83
IMPROVEMENTS TO EXISTING SYSTEM									
Plant Modernization	$221.9	$31.1	$13.3	$177.5	$74.1	$19.0	$39.8	$6.0	$38.6
Power System Improvements									
Consolidated Bus Garages									
Plant Maintenance Centers									
Plant Improvements-Ill									
Communications									
Fare Collection									
Private Bus Carrier									
Blue Line Improvements									
Green Line-n									
Tracks and Signals									
Haymarket-North									
South Bay									
Plant Improvements—IV-V									
Station Modernization	53.0		10.6	42.4			25.0		17.4
Rolling Stock Modernization*	27.0	5.4		21.6	21.6				
New Streetcars and Trackless Trolleys	27,0	1.9	3.5	21.6	8.7		12.9		
New Buses	68.0	5.1	8.5	54.4	20.5	4.0	4.3	4.3	21.3
SUB-TOTAL	396.9	43.5	35.9	317.5	124.9	23.0	82.0	10.3	77.3
COMMUTER RAIL IMPROVEMENTS									
R-O-W Improvements	52.0	10.4		41.6	10.0	15.0	16.6		
Rolling Stock	28.0	5.6		22.4	7.0	8.4	7.0		
Terminals and Terminal Facilities	20.0	4.0		16.0	5.0	5.0	6.0		
SUB-TOTAL	100.0	20.0		80.0	22.0	28.4	29.6		
ELECTRIFIED EXTENSIONS									
Blue Line									
North Shore	"82.0	10.0	6.4	65.6	4.0	6.0	26.8	28.8	
Back Bay	80.0		16.0	64.0					64.0
Orange Line-North, Oak Grove-North	70.0	6.4	7.6	56.0	3.5	10.0	21.0	21.5	
Red Line-Northwest									
Harvard-Arlington Heights	293.0	3.0	55.6	234.4	14.0	26.0	40.0	87.2	67.2
Arlington Heights									
Route 128									
Lexington	39.0	1.0	6.8	31.2	.3	1.6	5.0	5.0	19.3
Orange Line-Southwest									
So. Cove-Forest Hills	248.0	2.0	*47.6*	198.4	12.0	28.0	40.0	98.0	20.4
Forest Hills-Needham	63.0	*12.6*		50.4	3.0	17.0	30.4		
Replacement Service									
South End	"58.0	.5	11.1	*46.4*			25.4		21.0
Roxbury	""275.0	.5	54.5	220.0			20.0	20.0	160.0
Red Line-South Shore									
So. Braintree	42.0	8.4		33.6	33.6				
SUB-TOTAL	1,250.0	44.4	205.6	1,000.0	70.4	88.6	208.6	260.5	371.9
PROGRAM TOTAL	1,746.9	107.9	241.5	1,397.5	217.3	140.0	320.2	270.8	449.2
Federal Aid Received in FY 74 prior to 5-1-74.		17.5							
		$234.8							

● Modernization of Red Line and replacement of Orange and Blue Line fleets would result in a $62M project cost.
.* High estimate.

TABLE 3.—Massachusetts Bay Transportation Authority Statement on Federal Grants and Loans-Approved Projects March 15, 1974

PROJECT DESCRIPTION	DOT PROJ. No.	TYPE OF GRANT	DOT SHARE	LOCAL SHARE	TOTAL
1965					
Station Modernlzatlon	MA-03-0001	Capital	$6,077,280	$3,038,640	$9,115,920
1966					
Bus Acqulsltlon (150)	MA-03-0002	Capital	3,136,654	1,568,327	4,704,981
Haymarket Tunnel	MA-03 -OO03	Capital	12,000,000	6,000,000	18,000< 000
			$15,136,654	$7,568,327	$22,704,981
1967					
Haymarket Solls Inst.	MA-06-0008	Demonstration	$160,000	$80,300	$240,900
Southwest Corridor Study	MA-09-0001	Technical Stu.	484,484	242,242	726,726
			$645,084	$322,542	$967,626
1968					
South Shore RT	MA-03-0004	Capital	$34,547,333	$17,273,667	$51,821,000
South Shore RT	MA-03 -0(M)4	Relocation	617,000	—	617,000
Tralning Grant	MTTR-2	Managerial	19,976	6,658	26,634
			$35.184.309	$17.280.325	$52.464.634
1969					
Haymarket North	MA-03-0005	Capital	*$50,862,000*	*$25,431,000*	*$76,293,000*
Southwest Corridor Amend	MA-09-0001	Technical Stu,	13,333	6,667	20,000
Central Area *Systems* Stu	MA-09-0002	Technical Stu,	522,067	261,034	783,101
HN Solls Instr Amend	MA-06-0008	Demonstration	144,971	72,486	217,457
Service Development	MASS-MTD-7	Demonstration	35,178	8,252	43,430
Tralnlng Grants	MTTR-3	Managerial	15,303	5,102	20,405
			$51,592,852	$25,784,541	$77,377,393
1970					
Tralnlng Grants	MTTR-4	Managerial	$10,238	$3,412	$13,650
1971					
SS Rapid Transit Amend	MA-03-0004	Capital	$3,657,263	$1,828,632	$5,485,895
So. Bay Maintenance Cen	MA-03-0007	Capital	18,800,000	9,400,000	28,200,000
Systemwlde Modernlzatlon	MA-O3-OO1O	Capital	3,000,000	1,500,000	4,500,000
Bus Acqulsltlon (310)	MA-03-0011	Capital	8,100,250	4,050,125	12,150,375
Valldatlon Study	MASS-MTD-8	Demonstration	346,616	51,422	398,038
Valldatlon Study Amend	MASS-MTD-8	Demonstration	35,100	7,296	42,396
Tralnlng Grants	MTTR-5,6,7,8,9	Managerial	22,738	7,579	30,317
			$33,961,967	$16,845,054	$50,807,021
1972					
Bos Trans. Plan. Review	MA-O9-OO1O	Technical Stu.	$1,693,500	$846,750	$2,540,250
Light Rad Veh. Spec.	MA-06-0015	Demonstration	109,084	20,841	129,925
So Bay Maln. Cen. Amend. ,	MA-03-0007	Capital	320,000	180,000	480,000
Sta. Modernlzatlon Phase II	MA-03-0013	Capital	9,565,086	4,782,544	14,347,630
Green Line Improvements	MA-03-0015	Capital	25,413,333	12,706,667	38,120,000
Non-Revenue Equipment	MA-03-0021	Capital	568,940	284,470	853,410
			$37,669,943	$18,801,272	$56,471,215
1973					
Light Rail Veh Spec. Amend	MA-06-0015	Demonstration	$24,514	$8,486	$33,000
Green Line Vehicles ,	MA-03-0022	Capital	32,800,000	16,400,000	49,200,000
Plant Improvements PH I	MA-03-0017	Capital	1,573,146	786,574	2,359,720
Rapid Transit Cars (80)	MA-03-0025	Capital	18,410,600	9,205,300	27,615,900
Safety Improvements	MA-38-0025	Capital	10,601,640	5,300,820	15,902,460
Plant Improvements ,	MA-03-0026	Capital	7,933,092	3,966,548	11,899,640
Trackless Trolleys-50 PH II	MA-03-0028	Capital	1,781,500	890,750	2,672,250
Haymarket North Amend,	MA-03-0005	Capital	13,126,410	6,653,206	19,689,616
Penn Central Acquisition	MA-03-9001	Loan	19,500,000	0	19,500,000
			$105,750,902	$43,121,684	$148,872,586
1974					
Rest Orange Line Str.	MA-03-0029	Capital	$4,456,872	$1,114,218	$5,571,090
Transit Development Prog.	MA-09-0016	Technical Stu.	1,200,000	300,000	1,500,000
			$5,656,872	$1,414,218	$7,071,090

Source MBTA, *10-Year Transit Development Program, 1974-83,* **Boston: 1974, pp, II I-3—III-4**

TABLE 4.—Federal Assistance to Boston Transit Programs From F.Y. 1962 to May 31, 1975

Type of Assistance	Federal Share	Total Costs
Capital Grants	$322,852,000	$650,620,000
Capital Loans	19,500,000	19,500,000
Interstate Transfers	33,040,000	41,300,000
Technical Studies	4,965,000	7,108,000
Total	$380,357,000	$718,528,000

Source: Urban Mass Transportation Administration

In summary, MBTA's financial plan rests on assumptions that may not be reliable. If Federal and local funding does not become available in the amounts that are needed, MBTA will be faced with the necessity of making hard choices among the many improvement projects that have been described in its current lo-year development program.

Summary Case Assessment



The purpose of this section is to summarize the transit planning and decisionmaking process in the Boston region in light of the guidelines listed in the Introduction to the case assessments. The summary, therefore, is divided into two parts: (1) Assessment of the Institutional Context, and (2) Assessment of the Technical Planning Work.

1. ASSESSMENT OF THE INSTITUTIONAL CONTEXT

. **Forum for Decisionmaking.—Historically, transportation decisions** in Boston were made by semiautonomous highway and transit agencies and local governments. Recent agency reorganization programs have centralized transportation policymaking in the Executive Office of Transportation and Construction (EOTC) and have clarified transportation planning and project development responsibilities in the Boston area. Through the reorganization of EOTC and the Massachusetts Bay Transportation Authority (M BTA), as well as the five-agency Memorandum of Agreement that established Joint Regional Transportation Committee and the Central Transportation Planning Staff, the Boston area has developed the institutional

mechanisms necessary to permit effective interagency and intergovernmental coordination, As its planning responsibilities have been transferred to EOTC, MBTA has come to function primarily as a transit operating agency.

. Accountability of Decisionmakers.—The Secretary of EOTC—and, ultimately, the Governor who appoints him—are becoming increasingly involved in setting transportation policy and reaching major project decisions in the Boston area. Because the Governor is the sole elected official directly accountable to all the citizens residing within the MBTA service district, the shift of decisionmaking power to EOTC gives citizens a greater degree of formal control in the transportation planning process. The State legislature continues to exercise considerable influence over the region's transit programs through its power to approve or disapprove bonding authority.

. Public Involvement.—The Boston Transportation Planning Review (BTPR) constituted a major experiment of nationwide significance in its approach to developing an open, participatory study process. The BTPR philosophy and approach have been carried over to the newly established JRTC and CTPS institutions.

2. ASSESSMENT OF THE TECHNICAL PLANNING WORK

. Goals and Objectives.—The transportation goals and objectives for the Boston region—originally developed during BTPR and subsequently refined and extended—constitute a thoughtful attempt to incorporate a broad range of nontransportation objectives as well as transportation-related concerns in the region's transportation planning process. These goals and objectives provide a basic point of reference for judging specific projects and proposals contained in the region's transit development program.

• Development of Alternatives.—The current transit improvement program incorporates MBTA's longstanding rapid transit extension proposals, supplemented by a renewed emphasis on the retention and improvement of commuter rail facilities. However, programs for expanding bus services and other lower-cost approaches to transit improvements as well as technological and service innovations all merit greater study.

. Evaluation of Alternatives.—BTPR conducted the most significant alternatives analysis in Boston transportation history, involving an in-depth iterative process with continuous citizen and public agency participation. In general, however, there has been so little serious controversy over transit projects in Boston, at least until recently, that State transportation officials have resisted undertaking detailed analysis of the social, economic, and environmental impact of transit. Each of the major studies now underway has been structured to allow indepth consideration of a full range of alternatives. As yet, the work has not progressed to the point where the technical products can be evaluated.

. Financing and Implementation.—MBTA's current schedule and capital budget estimates appear optimistic in light of the authority's recent lack of success in securing Federal project approvals and funding commitments, as well as in the assumption that State and Federal funds will keep pace with future construction cost inflation. The State's current financial crisis and MBTA's rising operating deficit (which would be further aggravated by an expanded transit system) also may hinder completion of the capital program on its current schedule.

U. S. GOVERNMENT PRINTING OFFICE : 1976 O - 67-445